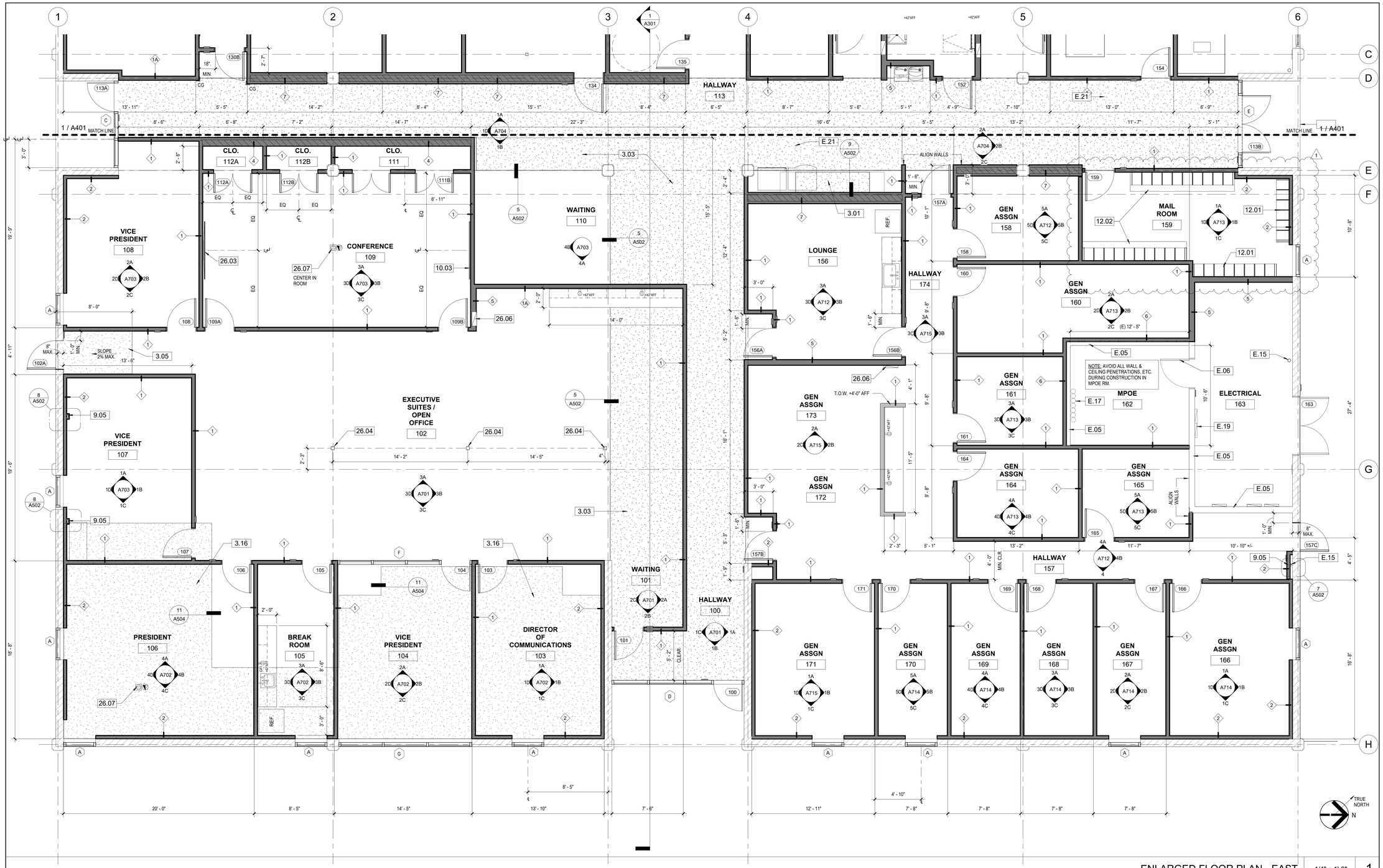


ENLARGED FLOOR PLAN - EAST | 1/4" = 1'-0" | 1

## NOTES:

1. MINIMUM MANUEVERING CLEARANCES AT DOORS SHALL BE LEVEL AND CLEAR. THE LEVEL AREA SHALL HAVE A LENGTH IN THE DIRECTION OF THE DOOR SWING OF AT LEAST 60 INCHES AND THE LENGTH OPPOSITE THE DIRECTION OF DOOR SWING OF 48 INCHES AS MEASURED AT RIGHT ANGLES TO THE PLANE OF THE DOOR IN ITS CLOSED POSITION. CBC 11B-404.2.4.
2. DOOR JAMBS AT CORNERS OF ROOMS SHALL BE 4" MIN. FROM WALL INSIDE CORNER U.N.O.
3. ALL DIMENSIONS ARE TAKEN FROM FACE OF EXISTING CONSTRUCTION OR FACE OF STUD FOR NEW CONSTRUCTION, UNLESS NOTED OTHERWISE.
4. DEPRESS CONCRETE SLABS IN RESTROOMS 2"

## LEGEND

- EXISTING PARTITION
- MASONRY WALL
- STUD PARTITION
- LOW PARTITION
- CONCRETE TOPPING INFILL, SEE 5/A502 U.N.O.
- PARTITION TYPE, SEE SHEET A502
- CG — WALL CORNER GUARD, SEE 3/A502
- CERAMIC TILE ON MORTAR SETTING BED ON 2" DEPRESSED SLAB

## KEYNOTES

| | |
|---|---|
| 3.01 | PROVIDE CONC. ON FOAM TO COVER (E) FLOOR OPENING, SEE 9/S300 |
| 3.03 | 2 1/2" THICK CONCRETE TOPPING INFILL |
| 3.05 | PROVIDE CONC. SLAB TO CREATE A SLOPE TO THE DOOR THRESHOLD LESS THAN 2% MAX., SEE SHEET S010 |
| 3.16 | 5/8" THICK CONCRETE TOPPING INFILL |
| 9.05 | FURR GYP. BD. AS REQUIRED WHEN (E) DOWNSPOUT IS EXPOSED |
| 10.03 | 4' x 6' WHITEBOARD, FOR BACKING SEE 8/S020 |
| 12.01 | MAIL SLOT CABINETS, SEE 12/A505 |
| 12.02 | MAIL SLOT CABINETS ON SOLID SURFACE COUNTERTOP, SEE 11/A505 |
| 26.03 | WALL MOUNTED FLAT SCREEN MONITOR; FOR BACKING SEE 8/S020 |
| 26.04 | POWER POLE, SEE ELEC. DWGS. |
| 26.06 | RECESSED ELEC. PANEL, SEE ELEC. DWGS. |
| 26.07 | FLOOR POWER & DATA OUTLETS, SEE ELEC. DWGS. |
| E.05 | (E) WALL TO REMAIN |
| E.06 | (E) DOOR TO REMAIN |
| E.15 | (E) DOWNSPOUT; PROTECT IN PLACE |
| E.17 | (E) THRU FLOOR CONDUITS TO REMAIN |
| E.19 | (E) ELECTRICAL PANEL TO REMAIN, SEE ELEC. DWGS. |
| E.21 | (E) PLENUM BELOW TO BE ABANDONED |

DIVISION OF THE STATE ARCHITECT

MOORPARK COLLEGE

7075 CAMPUS RD
MOORPARK, CA 93021
TEL: (805) 378 - 1400

PROJECT TITLE AND SCHOOL LOCATION

**ADMINISTRATION BUILDING SEISMIC REHABILITATION AND RENOVATION**
7075 CAMPUS ROAD
MOORPARK, CA 91320

COMMISSIONED ARCHITECT

AMADOR

amador whittle architects, inc
28328 AGOURA RD, 203 | AGOURA HILLS CA, 91301 | 805-558-4334

CONSULTANT

STAMPS/SEALS

3/17/25 ADDENDUM 1

SHEET TITLE:

ENLARGED FLOOR PLAN - EAST

PROJECT NO: 21-MPC-040 | PROJECT ARCH:
DRAWN: GW | CHECKED:
SHEET NUMBER:

**A402**

DATE: 3/17/25 | SHEET: ___ OF ___

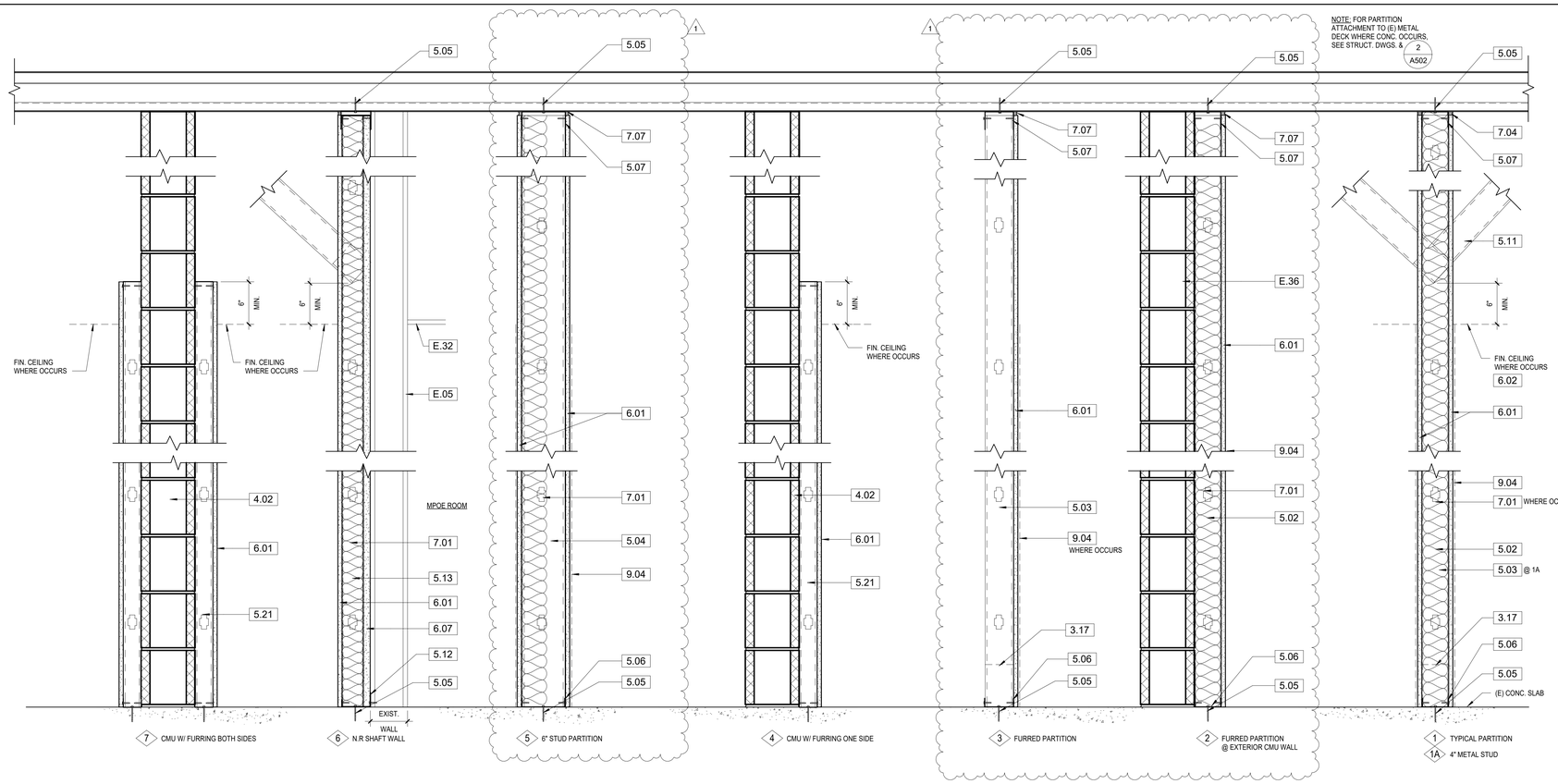


## KEYNOTES

| | |
|---|---|
| 3.17 | PROVIDE 6" HIGH CONC. CURB AT RESTROOMS, SEE 13/A504 |
| 4.02 | 8" THICK CMU WALL, SEE STRUCT. DWGS. |
| 5.02 | 362S162-33 METAL STUDS @ 16" O.C. |
| 5.03 | 4" x 20 GA. METAL STUDS @ 24" O.C. |
| 5.04 | 600S162-33 METAL STUDS @ 16" O.C. |
| 5.05 | 1/4" DIA. x 1 5/8" MIN. EMBED HILTI 'HUS' CONC. SCREW ANCHOR @ 24" O.C. (PER ICC ESR-3027) |
| 5.06 | METAL STUD TRACK- SAME SIZE & GUAGE AS STUDS |
| 5.07 | SLOTTED TRACK SYSTEM: CEMCO ICC-ES ESR #3016 OR APPROVED EQUAL |
| 5.11 | METAL STUD KICKER BRACING, SEE 13/S021 AT WALLS UNDER (E) MTL. DECK W/ INSULATING FILL ONLY; NOT REQUIRED WHERE TOP OF WALL IS ANCHORED TO (E) CONC. FILL |
| 5.12 | 4" J-RUNNER- SAME GAUGE AS STUDS |
| 5.13 | 4" C-H STUDS @ 24" O.C. |
| 5.21 | 250S125-33 METAL STUDS @ 24" O.C. |
| 6.01 | 5/8" GYPSUM BOARD |
| 6.02 | 5/8" TYPE 'X' GYPSUM BOARD |
| 6.07 | 1" GYPSUM BOARD LINER |
| 7.01 | BATT INSULATION |
| 7.04 | CONTINUOUS FIRE CAULKING |
| 7.07 | CONT. SEALANT W/ BACKER ROD |
| 9.04 | THINSET CERAMIC TILE |
| E.05 | (E) WALL TO REMAIN |
| E.32 | (E) CEILING TO REMAIN |
| E.36 | (E) CMU WALL |

## PARTITION NOTES

1. INSTALL 5/8" MOLD RESISTANT GYPSUM BOARD AT ALL WET LOCATIONS NOT COVERED BY TILE FINISH
2. INSTALL 5/8" CEMENTITOUS BACKER BOARD AT ALL CERAMIC TILE LOCATIONS
3. SEE INTERIOR ELEVATIONS FOR EXTENT OF FRP NOT SHOWN HERE.
4. FOR LOCATIONS OF UNISTRUT, SEE STRUCT. DWGS.
5. FOR BRACING AT FULL HEIGHT WALLS, SEE STRUCT. DWGS.
6. PROVIDE 6" HIGH CONC. CURB AT RESTROOM WALLS.
7. INSTALL METAL STUD BRIDGING ON THE SIDE WHERE WALL FINISH DOES NOT OCCUR PER 15/S021
8. PROVIDE R-13 THERMAL INSULATION AT EXTERIOR WALLS.
9. PROVIDE R-30 THERMAL INSULATION AT UNDERSIDE OF METAL DECK.
10. PROVIDE R-30 THERMAL INSULATION AT UNDERSIDE OF METAL DECK.

1

PARTITION TYPES | 1 1/2" = 1'-0" | 1

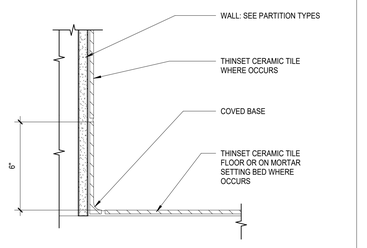


C.T. COVED BASE | 3" = 1'-0" | 10

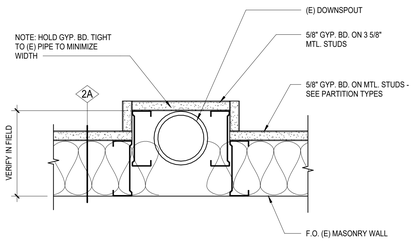


WALL FURRING PLAN @ (E) DOWNSPOUT | 3" = 1'-0" | 8

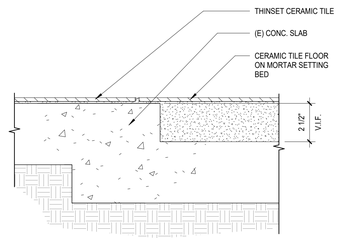


C.T. FLOOR @ DEPRESSED SLAB | 3" = 1'-0" | 6

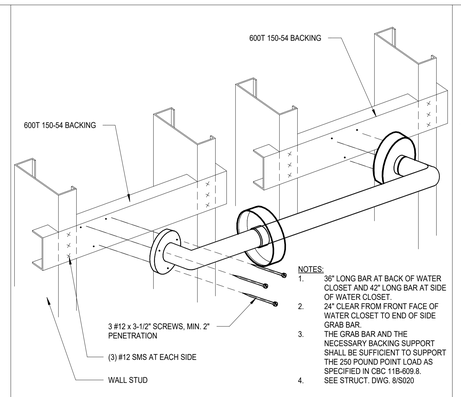


GRAB BAR | 3" = 1'-0" | 4

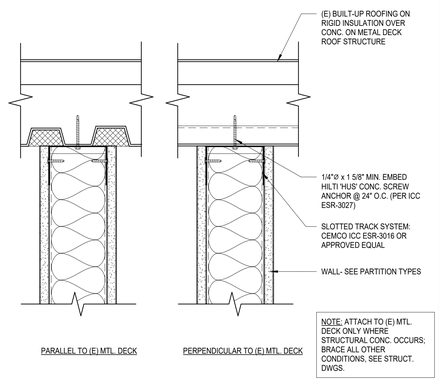


NOTE: ATTACH TO (E) MTL. DECK ONLY WHERE STRUCTURAL CONC. OCCURS; BRACE ALL OTHER CONDITIONS, SEE STRUCT. DWGS.

TOP OF WALL AT (E) ROOF DECK | 3" = 1'-0" | 2

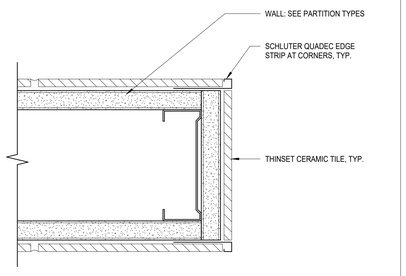


C.T. WALL EDGE- PLAN VIEW | 6" = 1'-0" | 11

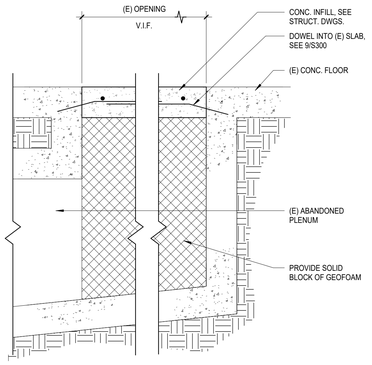


FLOOR SLAB INFILL | 1 1/2" = 1'-0" | 9

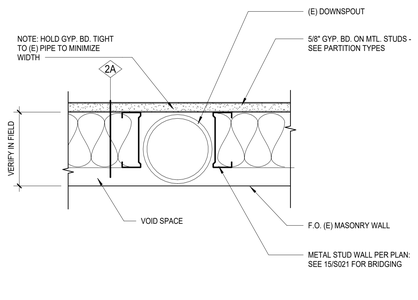


WALL FURRING PLAN @ (E) DOWNSPOUT | 3" = 1'-0" | 7

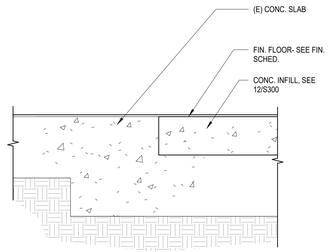


SLAB INFILL @ DEPRESSED FLOOR | 3" = 1'-0" | 5

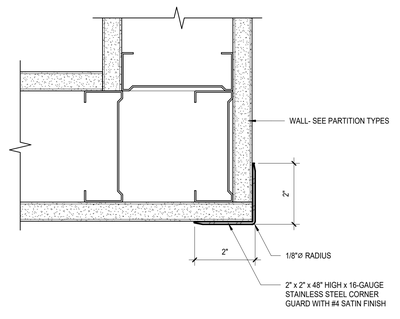


WALL CORNER GUARD | 6" = 1'-0" | 3

DIVISION OF THE STATE ARCHITECT

MOORPARK COLLEGE

7075 CAMPUS RD
MOORPARK, CA 93021
TEL: (805) 378 - 1400

PROJECT TITLE AND SCHOOL LOCATION

**ADMINISTRATION BUILDING SEISMIC REHABILITATION AND RENOVATION**

7075 CAMPUS ROAD
MOORPARK, CA 91320

COMMISSIONED ARCHITECT

**AMADOR**

amador whittle architects, inc.
28328 AGOURA RD, 203 | AGOURA HILLS CA, 91301 | 805-558-4334

CONSULTANT

STAMPS/SEALS

1 3/17/25 ADDENDUM 1

SHEET TITLE:

PARTITION TYPES & DETAILS

PROJECT NO: 21-MPC-040
PROJECT ARCH:
DRAWN: GW
CHECKED:
SHEET NUMBER:

**A502**

DATE: 3/17/25
SHEET: ___ OF ___

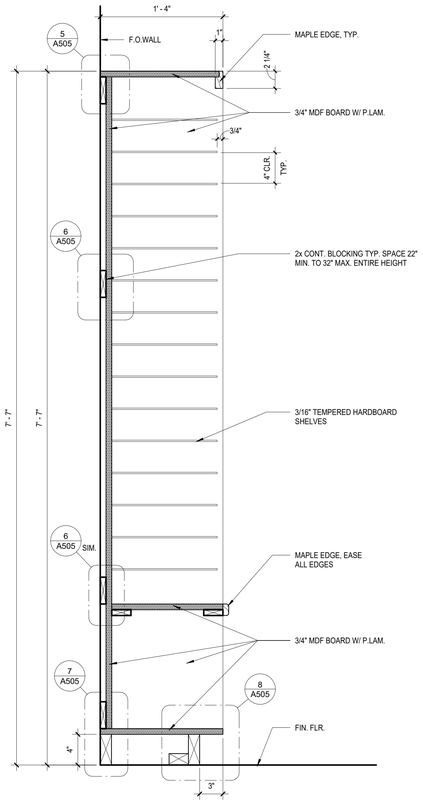


MAIL SLOTS | 1 1/2" = 1'-0" | 12

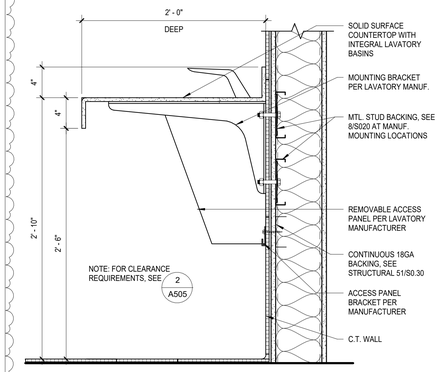


LAVATORY COUNTER | 1 1/2" = 1'-0" | 9

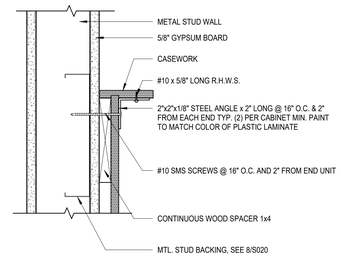


WALL ANCHORAGE (TOP) | 3" = 1'-0" | 5

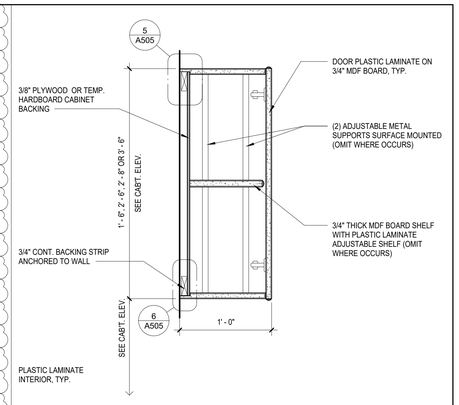


UPPER WALL CABINET | 1 1/2" = 1'-0" | 1

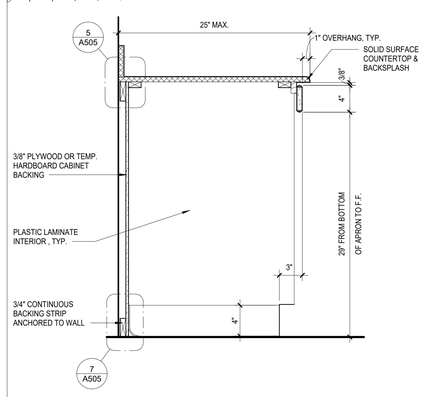


OPEN COUNTERTOP | 1 1/2" = 1'-0" | 10

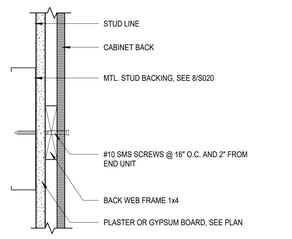


WALL ANCHORAGE (MID) | 3" = 1'-0" | 6

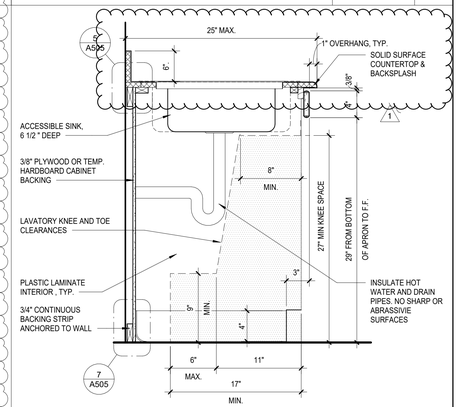


ACCESSIBLE SINK | 1 1/2" = 1'-0" | 2

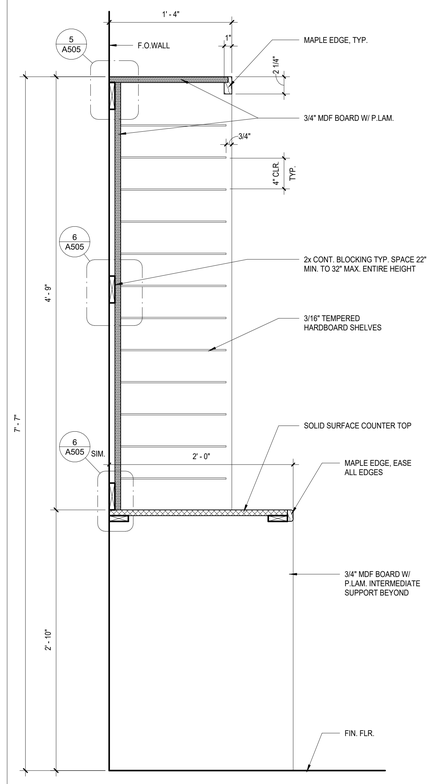


MAIL SLOTS WITH COUNTER TOP | 1 1/2" = 1'-0" | 11

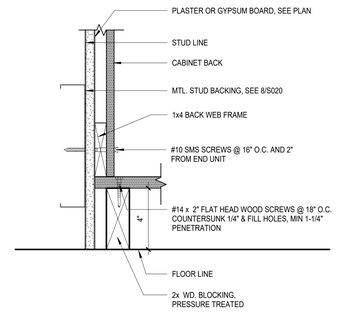


WALL ANCHORAGE (BASE) | 3" = 1'-0" | 7

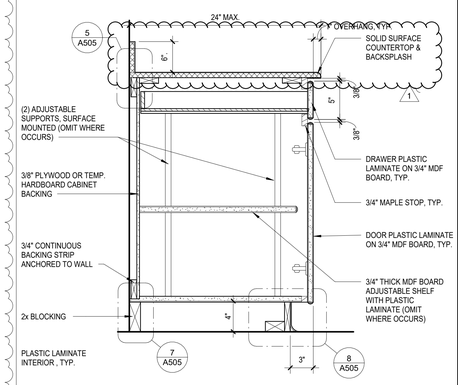


BASE CABINET DRAWER & DOOR | 1 1/2" = 1'-0" | 3

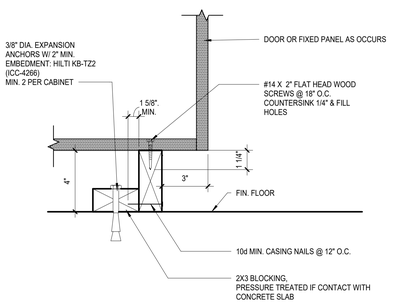


BASE ANCHORAGE DETAIL | 3" = 1'-0" | 8

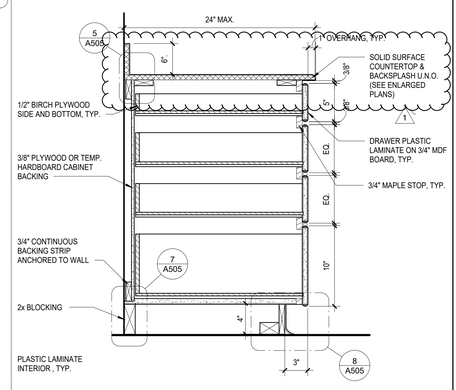


BASE CABINET WITH 4 DRAWERS | 1 1/2" = 1'-0" | 4

DIVISION OF THE STATE ARCHITECT

MOORPARK COLLEGE

7075 CAMPUS RD
MOORPARK, CA 93021
TEL: (805) 378 - 1400

PROJECT TITLE AND SCHOOL LOCATION

**ADMINISTRATION BUILDING SEISMIC REHABILITATION AND RENOVATION**

7075 CAMPUS ROAD
MOORPARK, CA 91320

COMMISSIONED ARCHITECT

**AMADOR**

amador whittle architects, inc.
28328 AGOURA RD, 203 | AGOURA HILLS CA, 91301 | 805-558-4334

CONSULTANT

STAMPS/SEALS

1 3/17/25 ADDENDUM 1

SHEET TITLE:

CASEWORK DETAILS

PROJECT NO: 21-MPC-040
PROJECT ARCH:
DRAWN: GW
CHECKED:
SHEET NUMBER:

**A505**

DATE: 3/17/25
SHEET: ____ OF ____

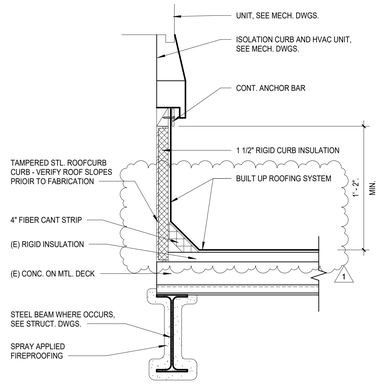


MECH. UNIT CURB | 1 1/2" = 1'-0" | 4

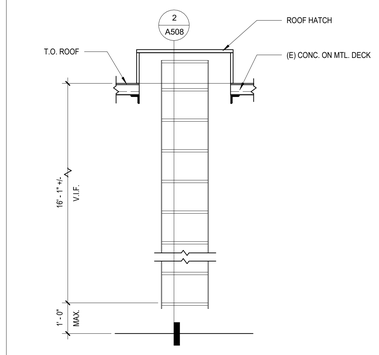


ROOF ACCESS LADDER ELEVATION | 1/2" = 1'-0" | 1

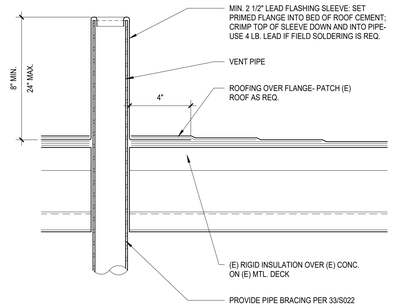


VENT PIPE FLASHING | 3" = 1'-0" | 5

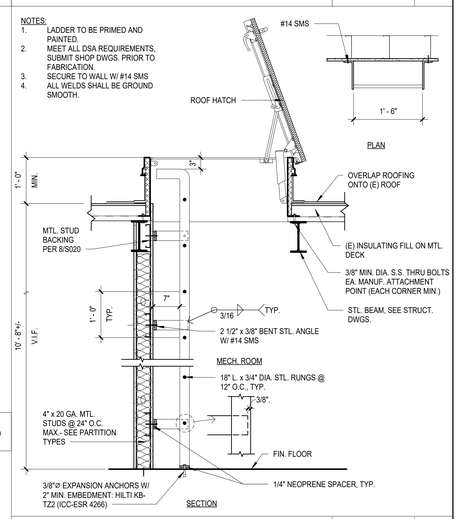


ROOF ACCESS LADDER | 3/4" = 1'-0" | 2

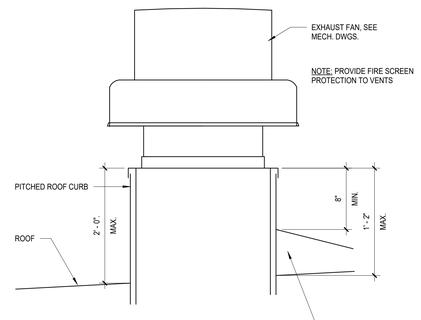


EXHAUST FAN | 1 1/2" = 1'-0" | 3

DIVISION OF THE STATE ARCHITECT

MOORPARK COLLEGE

7075 CAMPUS RD
MOORPARK, CA 93021
TEL: (805) 378 - 1400

PROJECT TITLE AND SCHOOL LOCATION

**ADMINISTRATION BUILDING SEISMIC REHABILITATION AND RENOVATION**

7075 CAMPUS ROAD
MOORPARK, CA 91320

COMMISSIONED ARCHITECT

AMADOR

amador whittle architects, inc
28328 AGOURA RD, 203 | AGOURA HILLS CA, 91301 | 805-558-4334

CONSULTANT

STAMPS/SEALS

3/17/25 ADDENDUM 1

SHEET TITLE:

ROOF DETAILS

PROJECT NO: 21-MPC-040 | PROJECT ARCH:
DRAWN: GW | CHECKED:
SHEET NUMBER:

**A508**

DATE: 3/17/25 | SHEET: ___ OF ___

# MATERIALS LIST

PT 2

| MARK | MATERIAL | MANUFACTURER | STYLE | COLOR | REMARKS |
|---|---|---|---|---|---|
| ACT-1 | 2' x 2' ACOUSTIC TILE CIELING | ARMSTRONG | ULTIMA HIGH NRC, 1942 BEVELED TEGULAR | WHITE | |
| B-1 | RUBBER BASE | ROPPE OR BURKE | PINNACLE STANDARD TOE BASE | 123 CHARCOAL , 556 BLUE DENIM | |
| B-2 | CERAMIC TILE BASE | DALTILE | VOLUMN 1.0, 24" X 24" | BROWN VL78 | |
| B-3 | CERAMIC TILE BASE | DALTILE | 6" HIGH FARRIER | CREMELLO FA55 | |
| CPT-1 | CARPET | INTERFACE | Open End #131400 AKOO | 103177 Gulf & 103179 Lapis | |
| CPT-2 | 4'-0" WIDE INTERIOR WALK OFF MAT | INTERFACE | FLOR STEP REPEAT COLLECTION GLASBAC WALK OFF TILE | | |
| CT-1 | CERAMIC TILE | DALTILE | 24" x 24" OUTLANDER | MOONLIGHT 0446 | SLIP RESISTANT |
| CT-2 | CERAMIC TILE | DALTILE | VOLUMN 1.0, 24" X 24" | BROWN VL78 | |
| CT-3 | CERAMIC TILE | DALTILE | 5" x 5" FARRIER | CREMELLO FA55 | |
| CT-4 | CERAMIC TILE | DALTILE | ~~6" x 6" QUARRY TILE~~ | ~~RED BLAZE 0G40~~ | |
| EX | EXISTING MATERIAL TO REMAIN | | | | |
| FRP-1 | FIBERGLASS REINFORCED PANELS | MARLITE | SMOOTH | WHITE S 100 S/2/S | 4'-0" HIGH AT MOP SINK WALLS |
| PL-1 | PLASTIC LAMINATE | WILSONART | STANDARD LAMINATE, MATTE FINISH | INDIGO D397-60 | COUNTERTOPS ARE SOLID SURFACE |
| PL-2 | PLASTIC LAMINATE | WILSONART | ANTIQUE FINISH | POTTERS CLAY 5011K | COUNTERTOPS ARE SOLID SURFACE |
| PL-3 | | | | | |
| PT-1 | PAINT | DUNN EDWARDS | | DEW336 WHITE SAND | |
| PT-2 | PAINT | DUNN EDWARDS | | DEC752 BIRCHWOOD | PAINT ACCENT ONE WALL PER ROOM |
| PT-3 | PAINT | DUNN EDWARDS | | DEW341 SWISS COFFEE | |
| PT-4 | PAINT | DUNN EDWARDS | | CALICO ROCK DE6229 | PAINT ACCENT ONE WALL PER ROOM |
| ST-1 | RESTROOM COUNTERTOP | BRADLEY | OMNIDECK WITH WASHBAR 5010 SERIES | ALPINE WHITE | |
| TP-1 | TOILET PARTITIONS | BRADLEY | SOLID PLASTIC PRIVACY SCREENS | DESERT STONE S406 | |
| VCT-1 | VINYL TILE -LUXURY VINYL PLANK | INTERFACE | 25cm X 1m x 4.5 mm thick | NATURAL SATIN A02610 | |
| VCT-2 | VINYL TILE -LUXURY VINYL PLANK | INTERFACE | 25cm X 1m x 4.5 mm thick | DARK SATIN A02612 | ANTI-STATIC |
| VCT-3 | VINYL TILE | ROPPE | ESD STATIC CONTROL RUBBER TILE | TIERRA F407 | |

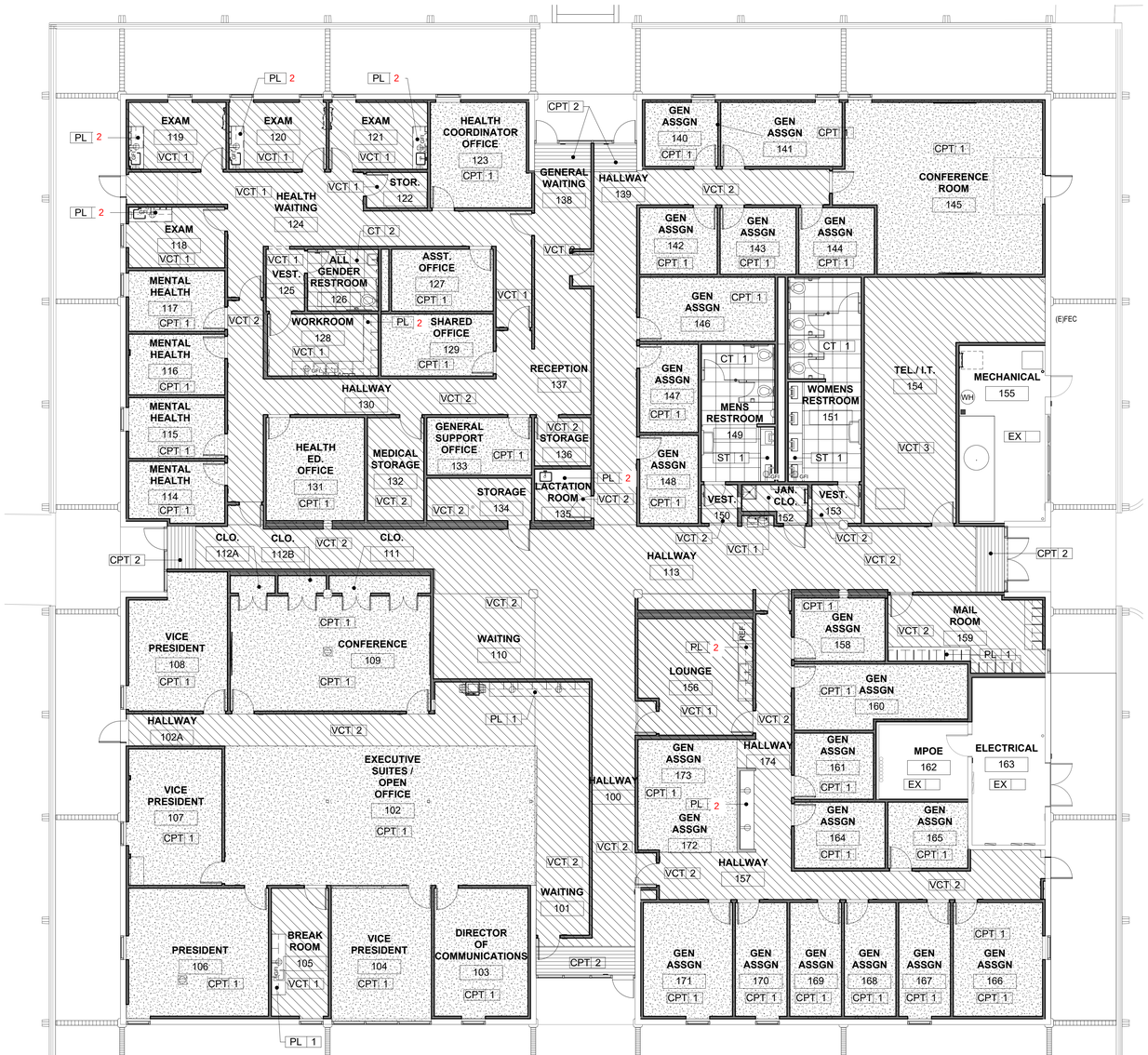


## FLOOR FINISH LEGEND

- VINYL TILE
- CERAMIC TILE
- CARPET TILES
- EXPOSED CONCRETE
- INTERIOR WALK OFF MAT

FLOOR FINISH PLAN | 1/8" = 1'-0" | 1

# FINISH SCHEDULE

| ROOM NO. | ROOM NAME | FLOOR FINISH | BASE FINISH | WALL FINISH | CEILING FINISH |
|---|---|---|---|---|---|
| 100 | HALLWAY | VCT-2 | B-1 | PT-1 | ACT-1 |
| 101 | WAITING | VCT-2 | B-1 | PT-2/PT-3 | ACT-1 |
| 102 | EXECUTIVE SUITES / OPEN OFFICE | CPT-1/ VCT-2 | B-1 | PT-2/PT-3 | ACT-1 |
| 102A | HALLWAY | VCT-2 | B-1 | PT-1 | ACT-1 |
| 103 | DIRECTOR OF COMMUNICATIONS | CPT-1 | B-1 | PT-2/PT-3 | ACT-1 |
| 104 | VICE PRESIDENT | CPT-1 | B-1 | PT-2/PT-3 | ACT-1 |
| 105 | BREAK ROOM | VCT-1 | B-1 | PT-2/PT-3 | ACT-1 |
| 106 | PRESIDENT | CPT-1 | B-1 | PT-2/PT-3 | ACT-1 |
| 107 | VICE PRESIDENT | CPT-1 | B-1 | PT-2/PT-3 | ACT-1 |
| 108 | VICE PRESIDENT | CPT-1 | B-1 | PT-2/PT-3 | ACT-1 |
| 109 | CONFERENCE | CPT-1 | B-1 | PT-2/PT-3 | ACT-1 |
| 110 | WAITING | VCT-2 | B-1 | PT-1 | ACT-1 |
| 111 | CLO. | VCT-2 | B-1 | PT-1 | PT-1 |
| 112A | CLO. | VCT-2 | B-1 | PT-1 | PT-1 |
| 112B | CLO. | VCT-2 | B-1 | PT-1 | PT-1 |
| 113 | HALLWAY | VCT-2 | B-1 | PT-1 | ACT-1 |
| 114 | MENTAL HEALTH | CPT-1 | B-1 | PT-1/PT-4 | ACT-1 |
| 115 | MENTAL HEALTH | CPT-1 | B-1 | PT-1/PT-4 | ACT-1 |
| 116 | MENTAL HEALTH | CPT-1 | B-1 | PT-1/PT-4 | ACT-1 |
| 117 | MENTAL HEALTH | CPT-1 | B-1 | PT-1/PT-4 | ACT-1 |
| 118 | EXAM | VCT-1 | B-1 | PT-1/PT-4 | ACT-1 |
| 119 | EXAM | VCT-1 | B-1 | PT-1/PT-4 | ACT-1 |
| 120 | EXAM | VCT-1 | B-1 | PT-1/PT-4 | ACT-1 |
| 121 | EXAM | VCT-1 | B-1 | PT-1/PT-4 | ACT-1 |
| 122 | STOR. | VCT-1 | B-1 | PT-1 | PT-1 |
| 123 | HEALTH COORDINATOR OFFICE | CPT-1 | B-1 | PT-1/PT-4 | ACT-1 |
| 124 | HEALTH WAITING | VCT-1 | B-1 | PT-1 | ACT-1 |
| 125 | VEST. | VCT-1 | B-1 | PT-1 | ACT-1 |
| 126 | ALL GENDER RESTROOM | CT-2 | B-3 | PT-1 | PT-1 |
| 127 | ASST. OFFICE | VCT-1 | B-1 | PT-1 | ACT-1 |
| 128 | WORKROOM | VCT-1 | B-1 | PT-1 | ACT-1 |
| 129 | SHARED OFFICE | CPT-1 | B-1 | PT-1 | ACT-1 |
| 130 | HALLWAY | VCT-2 | B-1 | PT-1 | ACT-1 |
| 131 | HEALTH ED. OFFICE | CPT-1 | B-1 | PT-1/PT-4 | ACT-1 |
| 132 | MEDICAL STORAGE | VCT-2 | B-1 | PT-1 | PT-1 |
| 133 | GENERAL SUPPORT OFFICE | CPT-1 | B-1 | PT-1/PT-4 | ACT-1 |
| 134 | STORAGE | VCT-2 | B-1 | PT-1 | PT-1 |
| 135 | LACTATION ROOM | CPT-1 | B-1 | PT-1/PT-4 | ACT-1 |
| 136 | STORAGE | VCT-2 | B-1 | PT-1 | PT-1 |
| 137 | RECEPTION | VCT-2 | B-1 | PT-1 | ACT-1 |
| 138 | GENERAL WAITING | VCT-2 | B-1 | PT-1 | ACT-1 |
| 139 | HALLWAY | VCT-2 | B-1 | PT-1 | ACT-1 |
| 140 | GEN ASSGN | CPT-1 | B-1 | PT-1 | ACT-1 |
| 141 | GEN ASSGN | CPT-1 | B-1 | PT-1 | ACT-1 |
| 142 | GEN ASSGN | CPT-1 | B-1 | PT-1 | ACT-1 |
| 143 | GEN ASSGN | CPT-1 | B-1 | PT-1 | ACT-1 |
| 144 | GEN ASSGN | CPT-1 | B-1 | PT-1 | ACT-1 |
| 145 | CONFERENCE ROOM | CPT-1 | B-1 | PT-1 | ACT-1 |
| 146 | GEN ASSGN | CPT-1 | B-1 | PT-1 | ACT-1 |
| 147 | GEN ASSGN | CPT-1 | B-1 | PT-1 | ACT-1 |
| 148 | GEN ASSGN | CPT-1 | B-1 | PT-1 | ACT-1 |
| 149 | MENS RESTROOM | CT-1 | B-2 | PT/CT-1 | PT-1 |
| 150 | VEST. | VCT-2 | B-1 | PT-1 | PT-1 |
| 151 | WOMENS RESTROOM | CT-1 | B-2 | PT/CT-1 | PT-1 |
| 152 | JAN. CLO. | VCT-1 | B-1 | PT-1/FRP-1 | EXIST |
| 153 | VEST. | VCT-2 | B-1 | PT-1 | PT-1 |
| 154 | TEL./ I.T. | VCT-3 | B-1 | PT-1 | EXIST |
| 155 | MECHANICAL | EXIST | NONE | PT-1 | EXIST |
| 156 | LOUNGE | VCT-1 | B-1 | PT-1 | ACT-1 |
| 157 | HALLWAY | VCT-2 | B-1 | PT-1 | ACT-1 |
| 158 | GEN ASSGN | CPT-1 | B-1 | PT-1 | ACT-1 |
| 159 | MAIL ROOM | VCT-2 | B-1 | PT-1 | ACT-1 |
| 160 | GEN ASSGN | CPT-1 | B-1 | PT-1 | ACT-1 |
| 161 | GEN ASSGN | CPT-1 | B-1 | PT-1 | ACT-1 |
| 162 | MPOE | EXIST | EXIST | EXIST | ACT-1 |
| 163 | ELECTRICAL | EXIST | EXIST | EXIST | EXIST |
| 164 | GEN ASSGN | CPT-1 | B-1 | PT-1 | ACT-1 |
| 165 | GEN ASSGN | CPT-1 | B-1 | PT-1 | ACT-1 |
| 166 | GEN ASSGN | CPT-1 | B-1 | PT-1 | ACT-1 |
| 167 | GEN ASSGN | CPT-1 | B-1 | PT-1 | ACT-1 |
| 168 | GEN ASSGN | CPT-1 | B-1 | PT-1 | ACT-1 |
| 169 | GEN ASSGN | CPT-1 | B-1 | PT-1 | ACT-1 |
| 170 | GEN ASSGN | CPT-1 | B-1 | PT-1 | ACT-1 |
| 171 | GEN ASSGN | CPT-1 | B-1 | PT-1 | ACT-1 |
| 172 | GEN ASSGN | CPT-1 | B-1 | PT-1 | ACT-1 |
| 173 | GEN ASSGN | CPT-1 | B-1 | PT-1 | ACT-1 |
| 174 | HALLWAY | VCT-2 | B-1 | PT-1 | ACT-1 |

DIVISION OF THE STATE ARCHITECT

IDENTIFICATION STAMP
DIV. OF THE STATE ARCHITECT
APP: 03-123218 INC:
REVIEWED FOR
SS ☑ FLS ☑ ACS ☑
DATE: 07/11/2024

MOORPARK COLLEGE

7075 CAMPUS RD
MOORPARK, CA 93021
TEL: (805) 378 - 1400

PROJECT TITLE AND SCHOOL LOCATION

**ADMINISTRATION BUILDING SEISMIC REHABILITATION AND RENOVATION**

7075 CAMPUS ROAD
MOORPARK, CA 91320

COMMISSIONED ARCHITECT

AMADOR

amador whittle architects, inc
28328 AGOURA RD, 203 | AGOURA HILLS CA, 91301 | 805-558-4334

CONSULTANT

STAMPS/SEALS

LICENSED ARCHITECT
JEAN ANN AMADOR
C-22205
APRIL 30, 2025
DATE
STATE OF CALIFORNIA

1 ADDENDUM 1, 03-17-2025
1/9/24 DSA V2
8/23/23 DSA V1

SHEET TITLE:

FINISH SCHEDULE & FLOOR FINISH PLAN

PROJECT NO: 21-MPC-040 | PROJECT ARCH:
DRAWN: GW | CHECKED:
SHEET NUMBER: A602 1
DATE: 1/9/24 | SHEET | OF

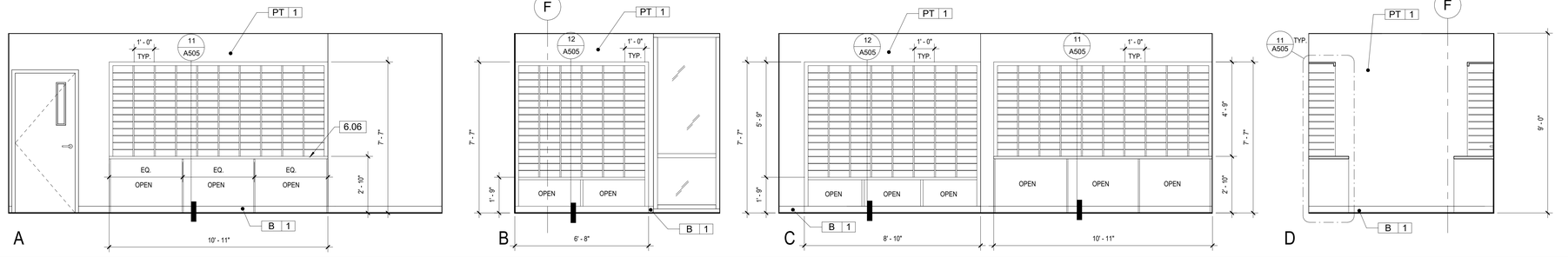


MAIL ROOM ELEVATIONS | 3/8" = 1'-0" | 1

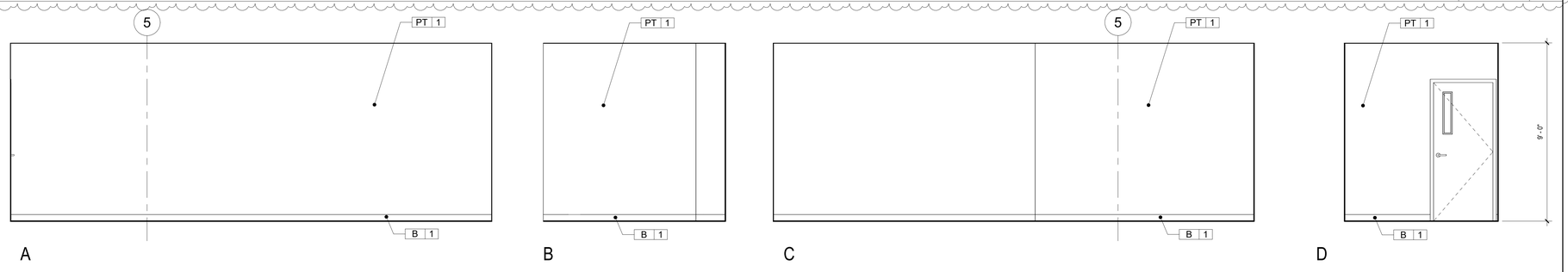


GEN. ASSGN. 160 ELEVATIONS | 3/8" = 1'-0" | 2

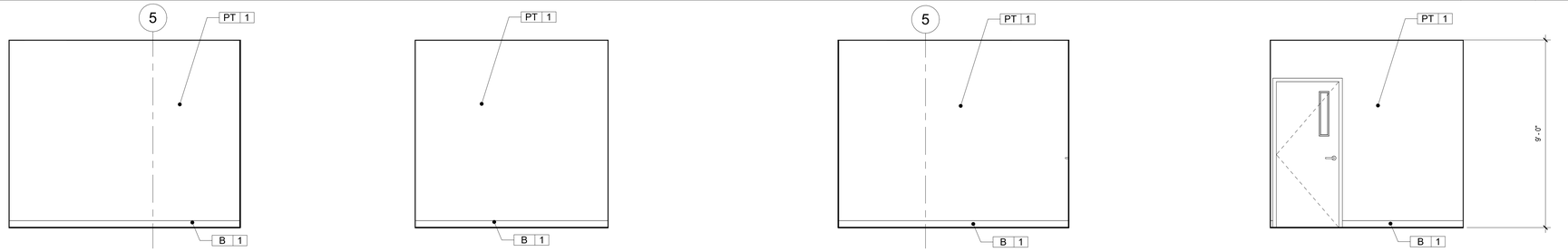


GEN. ASSGN. 161 ELEVATIONS | 3/8" = 1'-0" | 3

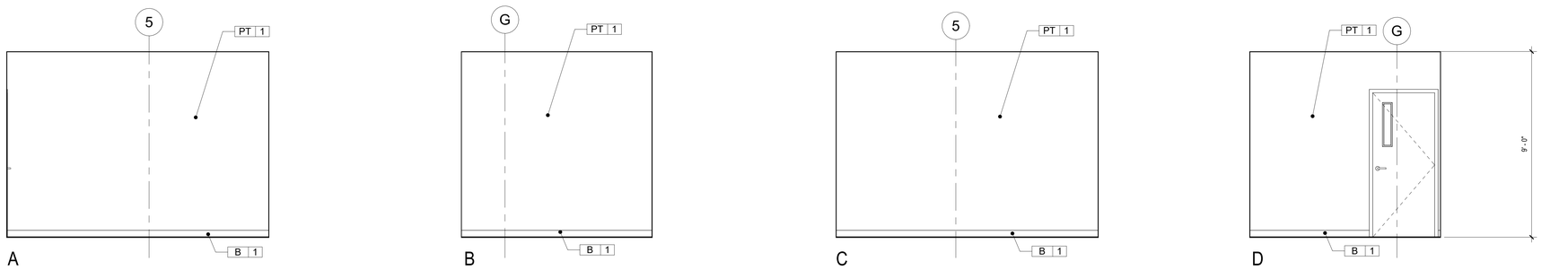


GEN. ASSGN. 164 ELEVATIONS | 3/8" = 1'-0" | 4

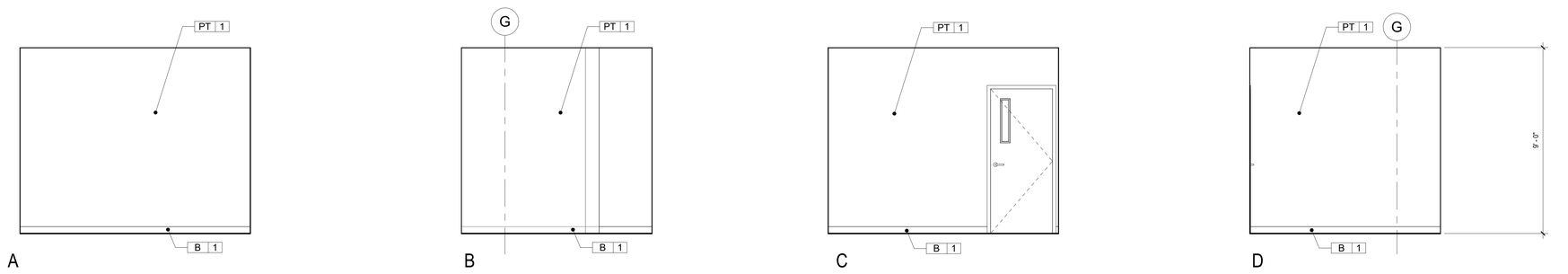


GEN. ASSGN. 165 ELEVATIONS | 3/8" = 1'-0" | 5

## KEYNOTES

6.06 SOLID SURFACE COUNTERTOP

## LEGEND

PT 1 MATERIAL FINISH, SEE SHEET A602

DIVISION OF THE STATE ARCHITECT

MOORPARK COLLEGE

7075 CAMPUS RD
MOORPARK, CA 93021
TEL: (805) 378 - 1400

PROJECT TITLE AND SCHOOL LOCATION

**ADMINISTRATION BUILDING SEISMIC REHABILITATION AND RENOVATION**

7075 CAMPUS ROAD
MOORPARK, CA 91320

COMMISSIONED ARCHITECT

AMADOR

amador whittle architects, inc
28328 AGOURA RD, 203 | AGOURA HILLS CA, 91301 | 805-558-4334

CONSULTANT

STAMPS/SEALS

1 3/17/25 ADDENDUM 1

SHEET TITLE:

INTERIOR ELEVATIONS

PROJECT NO: 21-MPC-040 | PROJECT ARCH: Designer
DRAWN: Author | CHECKED: Checker
SHEET NUMBER:

**A713**

DATE: 3/17/25 | SHEET: ___ OF ___

SHEET S110 DETAIL REFERENCE 5/S300 IS INTENDED TO CLARIFY CONNECTION AT CHANGE IN CEILING JOIST DIRECTION:

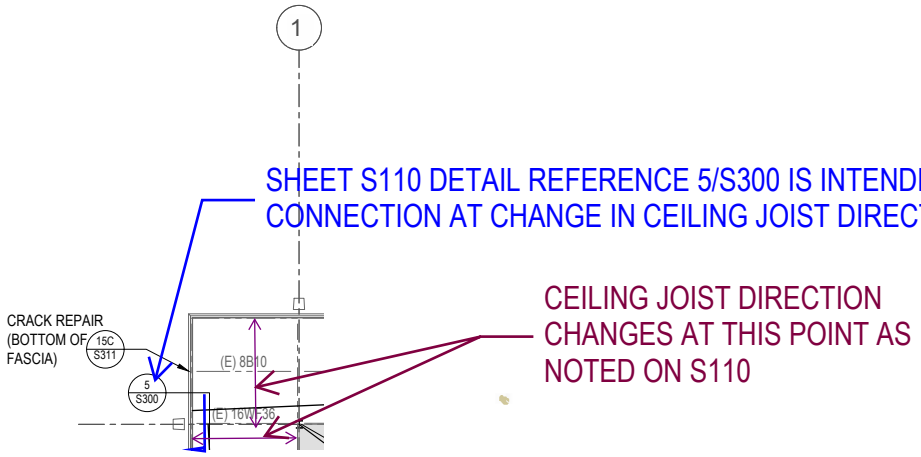


KEY PLAN FROM S110 (TYP ALL 4 CORNERS)

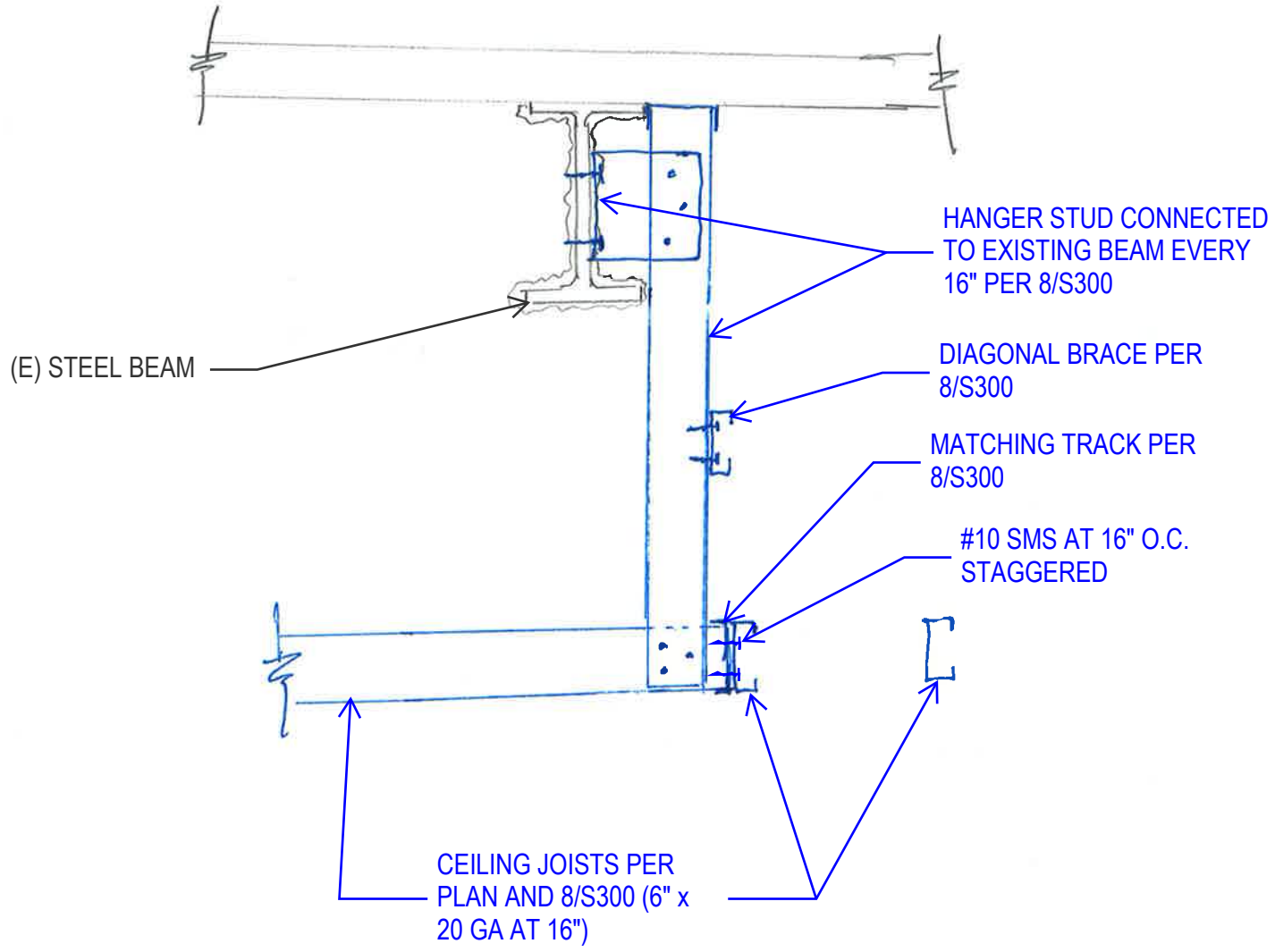


REGISTERED PROFESSIONAL ENGINEER
WILL A. LAMBERT
No. 5430
Exp. 06/30/2026
STRUCTURAL
STATE OF CALIFORNIA
3/13/2025

03-123218 MOORPARK COLLEGE ADMIN
SSK - BID RFI ITEM 6 (PAGE 1 OF 1)
REFERENCE TO 5/S300 ON S110 INTENDED TO CLARIFY CONNECTION AT CHANGE IN CEILING JOIST DIRECTION

SK-1

# GENERAL NOTES

A. GENERAL

1. SCOPE
THE DRAWINGS AND THESE GENERAL NOTES DESCRIBE THE SCOPE OF WORK AND SYSTEMS. THE MATERIAL REQUIRED FOR THE WORK SHALL BE CONTRACTOR FURNISHED AND CONTRACTOR INSTALLED, UNLESS SPECIFICALLY NOTED OTHERWISE. THE WORK INCLUDES BUT IS NOT LIMITED TO THE FOLLOWING PRINCIPAL SYSTEMS AND EQUIPMENT. ALL ITEMS NOTED ON THE PLAN WHICH ARE NOT EXPLICITLY STATED AS EXISTING SHALL BE NEW.

2. PERMITS AND CHARGES
OBTAIN AND PAY FOR ALL NECESSARY CONSTRUCTION PERMITS, INSPECTION FEES, AND OTHER CHARGES BY AGENCIES HAVING JURISDICTION.

3. REGULATIONS AND CODES
PROVIDE AND INSTALL ALL MATERIALS IN CONFORMANCE WITH THE 2022 C.E.C., CALIFORNIA ADMINISTRATIVE CODE TITLE 8, AND OTHER CODES AND REGULATIONS HAVING JURISDICTION. INSTALL ALL EQUIPMENT IN ACCORDANCE WITH THE REQUIREMENTS OF THE INSPECTING AUTHORITY AND THE MANUFACTURERS RECOMMENDATIONS.

4. VERIFYING EXISTING CONDITIONS
BEFORE SUBMITTING BID, BECOME THOROUGHLY FAMILIAR WITH ACTUAL EXISTING CONDITIONS AT THE BUILDING. THE INTENT OF THE WORK IS SHOWN ON THE DRAWINGS AND DESCRIBED HEREINAFTER. BY THE ACT OF SUBMITTING A BID PROPOSAL FOR THE WORK, THE CONTRACTOR SHALL BE DEEMED TO HAVE MADE SUCH STUDY AND EXAMINATION AND TO ACCEPT ALL CONDITIONS PRESENT AT THE SITE. NO REQUEST FOR ADDITIONAL PAYMENT WILL BE CONSIDERED AS VALID, DUE TO FAILURE TO ALLOW FOR CONDITIONS WHICH MAY EXIST.

5. COORDINATION
COORDINATE ALL WORK WITH OTHER TRADES. OBTAIN ALL DRAWINGS THAT WILL REQUIRE COORDINATION AND PROVIDE ALL ELECTRICAL CONNECTION REQUIRED WHETHER SHOWN ON ELECTRICAL DRAWINGS OR NOT. ELECTRICAL EQUIPMENT LOCATIONS INDICATED ARE SHOWN DIAGRAMMATICALLY, EXACT LOCATION SHALL BE VERIFIED. SCALING OFF OF DRAWINGS SHALL BE DONE AT CONTRACTORS RISK. DO NOT SCALE DEVICES, LIGHTING FIXTURES OR ANY EQUIPMENT FROM PLANS. LIGHTING FIXTURE QUANTITIES AND LENGTHS SHALL BE CONTRACTORS RESPONSIBILITY. FIXTURES ARE SHOWN FOR CIRCUITING ONLY. CONTRACTOR TO VERIFY SIZES & QUANTITIES PRIOR TO BID.

6. SERVICE CONTINUITY
UNINTERRUPTED EXISTING ELECTRICAL POWER SHALL BE MAINTAINED TO OTHER TRADES FOR TEMPORARY POWER AREAS OF THE SITE DURING CONSTRUCTION. PROVIDE ANY TEMPORARY SERVICES AS MAY BE REQUIRED. IDENTIFY AT BID TIME, ALL WORK TO BE DONE ON PREMIUM TIME AND THE TOTAL OVERTIME MAN-HOURS REQUIRED FOR COMPLETION.

7. AS BUILT
PROVIDE RECORD DRAWINGS IN ACAD TO THE OWNER WITH ALL CHANGES NOTED THEREON AT THE COMPLETION OF THE PROJECT. RECORD DRAWINGS SHALL BE SIGNED AND DATED BY CONTRACTOR PRIOR TO RELEASE OF FINAL RETENTION OF ALL MONIES..

8. GUARANTEE
CONTRACTOR SHALL UNCONDITIONALLY GUARANTEE ALL LABOR AND MATERIALS ON ALL WORK AGAINST DEFECTS IN WORKMANSHIP AND MATERIALS FOR A PERIOD OF ONE YEAR.

9. SHOP DRAWINGS
SUBMIT SHOP DRAWINGS AND MATERIAL LIST FOR REVIEW PRIOR TO COMMENCING ANY WORK. ALL EQUIPMENT TO BEAR U.L. LABEL OR THAT OF ANOTHER ACCEPTABLE TESTING LABORATORY. SHOP DRAWINGS MUST BE STAMPED BY THE CONTRACTOR FOR CONFORMANCE PRIOR TO SUBMITTAL. SUBMIT THREE HARD COPY SETS OF SHOP DRAWINGS FOR REVIEW PRIOR TO PURCHASING ALL BREAKER MOUNTING HARDWARE, DISCONNECT SWITCHES, FUSES, CONTROLLERS, LIGHTING FIXTURES, LIGHT SWITCHES, RECEPTACLES, ETC.

10. CONTRACTOR BID
CONTRACTOR'S BID SHALL BE BASED ON ALL WORK SHOWN ON THE PLANS AND AS SPECIFIED. IF CONTRACTOR PROPOSES TO SUBSTITUTE FOR EQUIPMENT SPECIFIED, HE SHALL SUBMIT HIS REQUEST FOR CONSIDERATION OF THE OWNER AND ENGINEER PRIOR TO BID IN WRITING. ALL SUBSTITUTIONS MUST BE REVIEWED BY THE ENGINEER IN WRITING. SUCH REVIEW SHALL NOT RELIEVE THE CONTRACTOR COMPLYING WITH THE REQUIREMENTS OF THE DRAWINGS AND SPECIFICATIONS, AND THE CONTRACTOR SHALL BE RESPONSIBLE AT HIS OWN EXPENSE FOR ANY CHARGES RESULTING FROM HIS PROPOSED SUBSTITUTIONS WHICH AFFECT OTHER PARTS OF HIS OWN WORK, THE OWNER, ENGINEER OF RECORD OR THE WORK OF OTHER CONTRACTORS.

B. MATERIAL AND INSTALLATION
ALL WORK AND MATERIAL SHALL CONFORM TO THE LATEST RULES OF THE GOVERNING ELECTRICAL CODE AND INSTALLATION SHALL BE OF THE LATEST INDUSTRY STANDARDS OF WORKMANSHIP.

ALL INSTALLED MATERIALS AND EQUIPMENT SHALL BE LISTED U.L., NRTL OR LISTED AND APPROVED BY AN APPROVED TESTING LABORATORY.

1. CONDUITS
CONDUIT SHALL BE EMT, PVC, IMC, RIGID OR FLEXIBLE STEEL TYPE. CONDUIT SHALL BE MANUFACTURED IN ACCORDANCE WITH UL-1. A GROUND WIRE IS REQUIRED IN ALL FLEXIBLE CONDUIT AND UNDERGROUND CONDUIT. BUSHINGS SHALL BE INSTALLED ON ALL COMMUNICATION, TELEPHONE & SPEAKER CONDUITS. PROVIDE 3/16" NYLON PULL STRING IN ALL EMPTY CONDUITS. NO MC, BX OR AC90 SHALL BE PERMITTED (EXCEPT 6'-0" MAXIMUM STEEL MC FOR LIGHTING FIXTURE DROPS). FLEXIBLE STEEL CONDUIT RUNS SHALL BE LIMITED TO A MAXIMUM LENGTH OF 6 FOOT. ALL CONNECTIONS SHALL BE COMPRESSION & NOT SCREW TYPE.

2. SWITCHES AND RECEPTACLES
PROVIDE 20AMP NEMA RATED SWITCHES AND RECEPTACLES OF SPECIFICATION GRADE. ALL SWITCHES SHALL BE RATED FOR 120 AND/OR 277 VOLT AND RECEPTACLES SHALL BE NEMA 5-20R. IN ALL OFFICES AND OFFICE AREAS DEVICES SHALL BE DECORA SERIES TYPE WITH COLOR SELECTION BY CONTRACTOR/OWNERS REPRESENTATIVE.

3. FEEDERS AND BRANCH CIRCUITS IDENTIFICATION
IDENTIFY FEEDERS WITH THE CORRESPONDING CIRCUIT DESIGNATION AT THE OVER-CURRENT DEVICE, LOAD END, AND IN PULL BOXES WITH E-Z CODE OR OTHER APPROVED WIRE MARKER. IDENTIFY BRANCH CIRCUITS WITH I.D. MARKERS, THE CORRESPONDING CIRCUIT DESIGNATION AT THE OVER-CURRENT DEVICE, AT ALL SPLICES, IN JUNCTION BOXES, AND IN OUTLETS. USE PLASTIC COATED SELF-STICKING MARKERS SUCH AS THOMAS & BETTS E-Z CODE FOR IDENTIFICATION OF CONDUCTORS. IDENTIFY SIGNAL & COMMUNICATION CABLES AT TERMINAL AND OUTLET UNIQUELY WITH PERMANENT LABELING.

4. CONDUCTORS
DELIVER ALL CONDUCTORS TO THE JOB SITE IN ORIGINAL UNBROKEN CARTON OR REEL, PROPERLY TAGGED WITH U.L. LABEL, SIZE, TYPE, MANUFACTURER, TRADE NAME AND THE DATE OF MANUFACTURE. (MUST BE MANUFACTURED WITHIN 6 MONTHS) PROVIDE COPPER CONDUCTORS #12 AWG MINIMUM UNLESS SPECIFICALLY NOTED OTHERWISE ON THE DRAWINGS. PROVIDE STRANDED COPPER CONDUCTORS FOR ALL WIRING. USE CONDUCTORS WITH 90ºC THHN/THWN 600 VOLTS INSULATION, UNLESS OTHERWISE NOTED. CONDUCTOR SIZE NO.1 AWG AND SMALLER WITH 90 DEGREE C INSULATION ARE TO USE THE 60 DEGREE COLUMN OF THE CODE, TABLE 310-16, TO DETERMINE AMPACITY. CONDUCTORS #1/0 AWG AND LARGER WITH 75 DEGREE AND 90 DEGREE INSULATION ARE TO USE THE 75 DEGREE COLUMN OF CODE, TABLE 310-16, TO DETERMINE AMPACITY. (110.14C) WHERE THE NUMBER OF CONDUCTORS IN A RACEWAY OR CABLE EXCEEDS THREE, THE ALLOWABLE AMPACITY OF EACH CONDUCTOR SHALL BE REDUCED PER TABLE 310.15(B)(3)(a).

5. LIGHTING FIXTURES
PROVIDE LIGHTING FIXTURES WITH ELECTRONIC DRIVERS PER SCHEDULE. NO SUBSTITUTIONS OF FIXTURES SHALL BE PROVIDED WITHOUT THE APPROVAL OF THE ENGINEER -OF-RECORD.

6. PANELBOARDS (BID SQUARE D; SITE STANDARD)
DISTRIBUTION AND LIGHTING PANELBOARDS WITHIN PROJECT AREA SHALL BE OF THE COPPER BUS THREE PHASE, FOUR WIRE DISTRIBUTED PHASING TYPE. CIRCUITING SHALL BE ARRANGED TO PROVIDE, AS NEARLY AS POSSIBLE, AN EVENLY BALANCED LOAD ON ALL PHASES. PANELBOARDS SHALL BE BOLT-ON CIRCUIT BREAKER TYPE. AVAILABLE FAULT CURRENT IS STATED ON PANELBOARD SCHEDULE. PROVIDE PANEL IDENTIFICATION NAMEPLATE (ENGRAVED ON-ADHESIVE 1/2" MINIMUM LETTERS) AND TYPEWRITTEN LIST OF CIRCUITS IN THE DIRECTORY FRAME. PROVIDE HINGED PANEL COVERS.

7. STRUCTURAL SUPPORT
EACH SECTION OF FLOOR MOUNTED SWITCHBOARD, DISTRIBUTION BOARD, MCC, ETC. SHALL BE BOLTED TO THE CONCRETE HOUSEKEEPING PAD USING (6) 3/4"-10 GRADE 2 BOLTS AND CONICAL WASHERS TORQUED TO 70LB-FT, PROVIDE MINIMUM 4000 PSI STRENGTH CONCRETE BELOW ALL FLOOR MOUNTED ELECTRICAL EQUIPMENT. TIE THE TOP OF ALL FLOOR MOUNTED ELECTRICAL EQUIPMENT TO THE BUILDING STRUCTURE IN A SEISMICALLY APPROVED MANNER.

8. ELECTRICAL CERTIFICATION
"ELECTRICIANS" PERFORMING WORK ON THIS PROJECT SHALL BE CURRENTLY CERTIFIED IN ACCORDANCE WITH THE STATE OF CALIFORNIA AB931 AND THE DIVISION OF APPRENTISHIP STANDARDS SECTION 3099.

C. DEMOLITION
1. NOTIFY THE OWNER IMMEDIATELY WHEREVER EXISTING EQUIPMENT IS ENCOUNTERED WHICH MUST BE RELOCATED DUE TO THE NEW CONSTRUCTION, AND WHICH IS NOT INDICATED ON THE PLANS.

2. ALL REMOVED MATERIALS AND EQUIPMENT WHICH ARE SALVAGEABLE SHALL REMAIN THE PROPERTY OF THE OWNER. DELIVER SUCH SALVAGED MATERIALS AND EQUIPMENT ON THE PREMISES AS DIRECTED BY OWNER, AND NEATLY PILE OR STORE THEM AND PROTECT FROM DAMAGE. REMOVE FROM PREMISES AND DISPOSE OF ALL MATERIALS CONSIDERED BY THE OWNER TO BE SCRAP.

3. ALL DEVICES, CIRCUITS CONDUCTORS, FEEDERS ETC., WHEN NOTED TO BE REMOVED, SHALL BE REMOVED TO THE LAST ACTIVE DEVICE. ALL OVER-CURRENT PROTECTION AND DISCONNECT DEVICES NO LONGER UTILIZED BUT REMAINING AS LAST ACTIVE DEVICE SHALL BE LABELED AS 'SPARE'. COORDINATE ALL OUTAGES WITH OWNERS REPRESENTATIVE.

4. DISCONNECT AND MAKE SAFE ALL ELECTRICAL SYSTEMS ON SITE AND IN WALL, FLOORS, AND CEILINGS SCHEDULED FOR REMOVAL.

5. REMOVE, RELOCATE, AND EXTEND EXISTING INSTALLATIONS TO ACCOMMODATE NEW CONSTRUCTION.

6. REMOVE ABANDONED WIRING TO SOURCE OF SUPPLY AND RE-LABEL DEVICES AS SPARES.

7. REMOVE ABANDONED CONDUIT, INCLUDING ABANDONED CONDUIT ABOVE ACCESSIBLE CEILING FINISHES. CUT CONDUIT FLUSH WITH WALLS AND FLOOR, AND PATCH SURFACES.

8. DISCONNECT ABANDONED OUTLETS AND REMOVE DEVICES. REMOVE ABANDONED OUTLETS IF CONDUIT SERVICING THEM IS ABANDONED AND REMOVE. PROVIDE BLANK COVER FOR ABANDONED OUTLETS WHICH ARE NOT REMOVED.

9. DISCONNECT AND REMOVE ABANDONED LUMINAIRES. REMOVE BRACKETS, STEMS, HANGERS, AND OTHER

10. REPAIR ADJACENT CONSTRUCTION AND FINISHES DAMAGED DURING DEMOLITION AND EXTENSION WORK

11. MAINTAIN ACCESS TO EXISTING ELECTRICAL INSTALLATIONS WHICH REMAIN ACTIVE. MODIFY INSTALLATION OR PROVIDE ACCESS PANEL AS APPROPRIATE.

12. BEGINNING OF DEMOLITION MEANS CONTRACTOR ACCEPTS EXISTING CONDITIONS.

D. EXECUTION
1. CAREFULLY PROTECT ALL WALLS, TRIM, FLOORS, EQUIPMENT UTILITY LINES AND MATERIALS. WHEN WORKING ON FINISHED SURFACES, LIMIT DAMAGE TO THE CONFINES AS MUCH AS POSSIBLE AND RESTORE TO THE ORIGINAL CONDITION ALL SURFACES WHICH ARE DAMAGED BECAUSE OF THE INSTALLATION OF THIS WORK.

2. EQUIPMENT, MATERIALS AND SUPPLIES REMOVED FOR PROTECTION SHALL BE REPLACED IN ORIGINAL LOCATIONS. ANY MATERIALS DAMAGED SHALL BE REPLACED WITH NEW MATERIALS OF LIKE KIND AND QUALITY.

3. DO ALL DRILLING, CUTTING, CHANNELING AND PATCHING REQUIRED TO INSTALL ELECTRICAL WORK AS INDICATED OR HEREIN SPECIFIED. ALL HOLES, CURBS, ETC., IN FLOORS, CEILINGS AND WALLS SHALL BE PATCHED, UNLESS INDICATED OTHERWISE. PAINT ALL NEW ELECTRICAL RACEWAYS, CABINETS, ENCLOSURES AND FITTINGS PENETRATING INTO FIRE RATED ENVELOPES, SPACES, ETC.

3. ALL CONDUIT RUNS SHALL BE CONCEALED, UNLESS SHOWN OTHERWISE. PROVIDE A PULL WIRE IN ALL EMPTY CONDUITS.

4. EXISTING CONDITION SHOWN IS FROM AVAILABLE RECORD DRAWINGS AND VISUAL FIELD SURVEY AND SHOWN FOR REFERENCE ONLY. CONTRACTOR SHALL VERIFY ACTUAL EXISTING CONDITION AT SITE.

5. ALL WORK SHOWN IS NEW UNLESS SPECIALLY INDICATED AS EXISTING (X). ALL ELECTRICAL EQUIPMENT MOUNTING AND ANCHORAGE MUST CONFORM WITH LOCAL AND STATE SEISMIC CODES.

E. LOW VOLTAGE SYSTEMS
PROVIDE RACEWAYS, AND ALL MATERIAL INCLUDING PULLING CABLE IN EACH RACEWAY AS REQUIRED FOR THE TELEPHONE SYSTEM PER THE TELEPHONE REQUIREMENTS. ALL CAT 6E CABLES SHALL BE TESTED & MEET CURRENT BICSI STANDARDS, A TEST REPORT SIGNED BY A RCCD SHALL BE PROVIDED WITH THE DOCUMENTATION.

F. GROUNDING & BONDING
FURNISH AND INSTALL COMPLETE BONDING AND GROUNDING SYSTEM AS REQUIRED BY CODES. CONTINUITY OF GROUNDING SHALL BE MAINTAINED MECHANICALLY AND ELECTRICALLY THROUGHOUT THE SYSTEM. A GREEN GROUNDING CODE SIZED CONDUCTOR SHALL BE CARRIED IN ALL CONDUITS.

G. INSTALLATION
1. IT IS THE INTENT OF THESE PLANS AND SPECIFICATIONS THAT A COMPLETE AND WORKABLE ELECTRICAL INSTALLATION BE PROVIDED FOR ALL THE EQUIPMENT DESCRIBED OR SHOWN AS BEING IN THIS CONTRACT. TOWARD THIS END FURNISH ALL LABOR AND TOOLS NECESSARY AND FURNISH AND INSTALL ALL APPARATUS, MATERIALS AND EQUIPMENT IN A FASHION COMPLYING WITH ALL APPLICABLE CODES, INCLUDING ITEMS REQUIRED BUT NOT NORMALLY SHOWN, SUCH AS LAMPS, COUPLINGS, HANGERS, BRACKETS, CLAMPS, BOXES, CONNECTORS AND HARDWARE. REFER ALSO TO WRITTEN SPECIFICATIONS FOR GENERAL, MECHANICAL AND ELECTRICAL SECTIONS.

2. PROCURE ALL PERMITS FROM LEGALLY CONSTITUTED AUTHORITIES, ARRANGE FOR ALL INSPECTIONS AND PAY ALL COSTS FOR FEES AND TESTS IN CONNECTION THEREWITH. COMPLY WITH CODES: NOTHING IN THESE PLANS AUTHORIZES DEVIATION FROM APPLICABLE CODES.

3. DETERMINE EXACT ROUTING OF CONCEALED FEEDERS AND BRANCH HOMERUNS IN COOPERATION WITH OTHER TRADES TO SIMPLIFY INSTALLATION WHEREVER POSSIBLE BUT SUBJECT TO APPROVAL OF ARCHITECT FOR VISUAL AND STRUCTURAL REASONS.

4. PROVIDE A CODE APPROVED DISCONNECT SWITCH OR BREAKER WITHIN SIGHT OF EVERY MOTOR AND FEED MOTORS NOT EQUIPPED WITH "BUILT IN" PROTECTION THROUGH A MAGNETIC OR MANUAL STARTER WITH OVERLOAD HEATERS SIZED TO COMPLY WITH MOTOR MANUFACTURER'S RECOMMENDATIONS AND APPLICABLE CODES.

5. FOR CONNECTIONS TO EXHAUST FANS, PUMPS, COMPRESSORS, SPACE HEATERS, WATER HEATERS, AQUASTATS, SOLENOID VALVES AND OTHER MECHANICAL EQUIPMENT AND FOR CONDUITS AND WIRE REQUIRED BUT NOT NECESSARILY SHOWN ON THESE DRAWINGS REFER TO MECHANICAL PLANS AND DETERMINE EXACT LOCATIONS UNDER DIRECTION OF HEATING AND VENTILAITING CONTRACTOR.

6. DO NOT RUN ANY CONDUIT IN SLAB IF ITS OUTSIDE DIAMETER EXCEEDS 1/3 THE THICKNESS OF THE SLAB. LOCATE CONDUITS WITHIN THE MIDDLE OF THE SLAB. WHERE CONDUITS ARE GROUPED IN PARALLEL RUNS, SPACE THEM 3" OR MORE APART. WHERE CONDUITS CROSS EACH OTHER, THICKEN SLAB PROPORTIONATELY OVER A HORIZONTAL AREA EQUAL TO TEN TIMES THE DIAMETER OF THE LARGEST CONDUIT. REFER ALSO TO DETAILS SHOWN..

7. SIZE OUTLET BOXES IN CONFORMITY WITH CODE FOR NUMBER AND GAUGE OF CONDUCTORS THEREIN, EXCEPT WHERE NOTED TO BE LARGER. MINIMUM BOX SIZE SHALL BE 4" SQUARE BY 1-1/2" DEEP.

8. ALL ELECTRICAL WORK SHALL BE INSTALLED SO AS TO BE READILY ACCESSIBLE FOR OPERATING, SERVICING, MAINTAINING AND REPAIRING. ALL CONDUIT SHALL BE CONCEALED WHERE POSSIBLE. EXPOSED CONDUIT SHALL BE IN STRAIGHT LINES PARALLEL WITH, OR AT RIGHT ANGLES TO, COLUMN LINES OR BEAMS AND SEPARATED BY AT LEAST THREE (3) INCHES FROM WATER LINES WHENEVER THEY RUN LONG SIDE OR ACROSS SUCH LINES. CONDUIT SHALL NOT BE RUN BELOW CABLE TRAYS OR LIGHT FIXTURES WITHOUT SPECIFIC APPROVAL OF THE OWNERS REPRESENTATIVE. HANGERS SHALL BE FASTENED TO STEEL, CONCRETE OR MASONRY, BUT NOT TO PIPING. HANGERS AND SUPPORT SYSTEMS ARE AN INTEGRAL PART OF THE VISUAL ENVIRONMENT. ALL HANGERS AND SUPPORTS EXPOSED TO PUBLIC VIEW MUST BE SHOWN IN DETAIL ON PLANS SUBMITTED TO ENGINEER FOR APPROVAL OF APPEARANCE. ALL HANGERS MUST BE UNIFORMLY SPACED AND NEATLY INSTALLED WITH NO EXCESS MATERIAL BEYOND WHAT IS REQUIRED FOR THE SUPPORT FUNCTION. CONTRACTOR SHALL SELECT ACCESSORIES AND HARDWARE WITH A SMOOTH, NEAT FINISHED APPEARANCE AND PAINT ALL EXPOSED CONDUIT HANGERS TO MATCH THE ADJACENT FINISHES.

9. ALL RECEPTACLES SHALL BE MOUNTED AT 18" PER ADA REQUIREMENTS UNLESS NOTED OTHERWISE, MEASURED FROM BOTTOM OF BOX.

10. ALL DISTRIBUTION BOARDS, SWITCHBOARDS AND TRANSFORMERS THAT ARE FLOOR MOUNTED SHALL BE MOUNTED ON 2" THICK HOUSEKEEPING PAD. TRANSFORMER SHALL BE ON VIBRATION ISOLATION PADS AND CONNECTED WITH FLEXIBLE CONDUIT.

11. CONTRACTOR SHALL EXAMINE PLANS AND VERIFY IN FIELD LOCATIONS OF ALL FIRE RATED WALLS, CEILINGS AND FLOORS. CONTRACTOR SHALL SEAL ALL ELECTRICAL SYSTEM PENETRATIONS THROUGH FIRE RATED WALLS, CEILINGS AND FLOORS WITH U.L. LISTED MATERIAL APPROVED BY THE AUTHORITY HAVING JURISDICTION.

12. ALL SWITCHES SHALL BE MOUNTED 36" TO 48" MEASURED FROM BOTTOM & TOP OF BOX RESPECTIVELY.

13. PANEL CIRCUIT DIRECTORY SHALL COMPLY WITH CEC 408.4.

14. PROVIDE CONCRETE SLURRY OVER ALL UNDERGROUND CONDUITS, USE ONLY CLEAN FILL.

H. ADDITIONAL NOTES
1. MARKING - UNDERGROUND SYSTEM SHALL BE LEGIBLY MARKED "UNDERGROUND SYSTEM" AT THE SOURCE OR FIRST DISCONNECTING MEANS OF THE SYSTEM. THE MARKING SHALL BE OF SUFFICIENT DURABILITY TO WITHSTAND THE ENVIRONMENT INVOLVED. (250.21)(C)

2. PROVIDE SWITCH AND RECEPTACLE HEIGHTS PER STATE OF CALIFORNIA ACCESSIBLE REQUIREMENTS.

3. THE ISSUANCE OF A PERMIT SHALL NOT PREVENT THE BUILDING OFFICIAL FROM REQUIRING THE CORRECTION OF ERRORS ON THESE PLANS OR FROM PREVENTING ANY VIOLATION OF THE CODES ADOPTED BY THE CITY, RELEVANT LAWS, ORDINANCES, RULES AND/OR REGULATIONS.

4. FOR FIRE RATED WALL/CEILING PENETRATION AND/OR MEMBRANE PENETRATION, COMPLETE NRTL CLASSIFICATION SHEETS SHALL BE PROVIDED TO THE INSPECTOR AT THE TIME OF INSPECTION FOR THE LISTED RATED ASSEMBLY.

5. EACH MULTIWIRE BRANCH CIRCUIT SHALL BE PROVIDED WITH A MEANS THAT WILL SIMULTANEOUSLY DISCONNECT ALL UNGROUNDED CONDUCTORS AT THE PANELBOARD WHERE THE BRANCH CIRCUIT ORIGINATES. (210.4)

6. MULTIWIRE BRANCH CIRCUITS SUPPLYING POWER TO THE PARTITION SHALL BE PROVIDED WITH A MEAN TO DISCONNECT SIMULTANEOUSLY ALL UNGROUNDED CONDUCTORS AT THE PANELBOARD WHERE THE BRANCH CIRCUIT ORIGINATES. (605.7)

7. PROVIDE SEPARATE SUBMITTAL; OBTAIN ALL REQUIRED PERMITS, INSPECTIONS AND APPROVALS FOR ALL FIRE ALARM SYSTEM INSTALLATIONS AND/OR MODIFICATIONS FROM THE FIRE DEPARTMENT.

8. ALL NEW OVERCURRENT DEVICES INSTALLED IN EXISTING PANELS/SWITCHBOARDS SHALL MATCH THE MAKE, MODEL AND INTERRUPTING CAPACITY OF THE EXISTING OVERCURRENT DEVICES.

9. RACEWAY SEALS. CONDUITS OR RACEWAYS THROUGH WHICH MOISTURE MAY CONTACT LIVE PARTS SHALL BE SEALED OR PLUGGED AT EITHER OR BOTH ENDS.

10. ALL 15-20 AMP 120 VOLTS, SINGLE PHASE RECEPTACLES WITHIN KITCHEN AND FOOD PREPARATION AREAS TO BE GFCI PER NEC 210.8.

11. PROVIDE LOCAL DISCONNECTS FOR ALL HARDWIRED EQUIPMENT THAT IS NOT "WITHIN SIGHT" OF THE SOURCE PANEL.

12. MULTIPLE RACEWAYS CONTAINING MORE THAN 3 CURRENT CARRYING CONDUCTORS SHALL COMPLY WITH [2016 CEC, 310.15(B)(2)(A)].

13. THE IDENTIFICATION OF EVERY CIRCUIT OF A PANEL BOARD AND SWITCHBOARD SHALL BE LEGIBLY IDENTIFIED AS TO ITS CLEAR, EVIDENT, AND SPECIFIC PURPOSE OR USE AND SHALL INCLUDE SUFFICIENT DETAIL TO ALLOW EACH CIRCUIT TO BE DISTINGUISHED FROM ALL OTHERS. 2016 C.E.C 408.4 - PROVIDE MORE DETAIL ON PANEL SCHEDULE CIRCUIT DESCRIPTIONS.

14. A SINGLE RECEPTACLE INSTALLED ON AN INDIVIDUAL BRANCH CIRCUIT SHALL HAVE AN AMPERE RATING OF NOT LESS THAN THAT OF THE BRANCH CIRCUIT. INDICATE THE RECEPTACLE RATING. (210.21(B)(1))

15. PROVIDE RECEPTACLE OUTLETS WHEREVER CORD CONNECTED EQUIPMENT WILL BE USED. (210.50(B))

16. WHERE THE DISCONNECTS ARE NOT PROVIDED WITHIN SIGHT FROM THE EQUIPMENT IT SUPPLIES, THE SWITCH OR CIRCUIT BREAKER MUST INCLUDE PROVISIONS FOR ADDING A LOCK, AND THESE PROVISIONS MUST REMAIN WITH THE EQUIPMENT. THESE LOCKING PROVISIONS HAVE TO BE PART OF THE EQUIPMENT, EITHER INHERENT TO THE EQUIPMENT DESIGN OR AS A ACCESSORY FEATURE THAT CAN BE INSTALLED ON THE EQUIPMENT. [410.141(B), 422.31(B), 424.19, 440.14 EXCEPTION NO. 1, 600.6(A)(2)(3), 620.51(A) EXCEPTION NO. 1, 620.53, 620.55]

17. STANDARD NON-LOCKING STRAIGHT-BLADE RECEPTACLES IN 120- AND 250-VOLT CONFIGURATION AT WET/DAMP LOCATION ARE REQUIRED TO BE LISTED WEATHER-RESISTANT TYPE. [CEC 406.8(A)].

I. FIRE ALARM SYSTEM
1. CONTRACTOR SHALL PROVIDE AND INSTALL A FIRE ALARM SYSTEM FOR THE PROJECT AREA TO INCLUDE:

A) SMOKE DETECTORS IN ALL REQUIRED AREAS
B) HEAT DETECTORS IN ALL REQUIRED AREAS
C) DUCT DETECTORS IN ALL REQUIRED SPACES
D) STROBES/SPEAKERS IN ALL REQUIRED AREAS
E) TAMPER AND FLOW SWITCHES

2. CONTRACTOR SHALL SUBMIT FOR THE OWNERS SIGNED APPROVAL, APPROVED FIRE DEPARTMENT FIRE ALARM DRAWINGS FOR THE PROJECT SPACE.

3. CONTRACTOR SHALL BE SITE STANDARD - EDWARDS.

4. ALL DEVICES AND EQUIPMENT SHALL BE CALIFORNIA STATE FIRE MARSHALL APPROVED AND CURRENTLY CSFM LISTED.

5. CONTRACTOR SHALL WARRANTY ALL DEVICES AND SYSTEMS FOR A PERIOD OF TWO YEARS.

6. CONTRACTOR SHALL PROVIDE 2 (TWO) HARD COPY SETS OF FIRE ALARM MANUALS FOR ALL SYSTEMS AND DEVICES IN ADDITION TO 2 (TWO) HARD COPY SETS OF A SYSTEM OPERATIONAL MANUAL TAILORED FOR THE PROJECT SPACE & ONE ELECTRONIC VERSION OF SITE & BUILDING FA PROGRAMING FOR SITE FA INTEGRATION.

7. CONTRACTOR SHALL PROVIDE AN INDIVIDUALLY ADDRESSABLE TOTALLY SUPERVISED SYSTEM WITH BATTERY BACK-UP FOR 24 HOURS OF MONITORING INITIATING CIRCUITS PLUS 30 MINUTES OF ALARM WITH DUAL RATE BATTERY CHARGER.

8. CONTRACTOR SHALL PROVIDE A SATISFACTORY SYSTEM TEST IN THE PRESENCE OF THE OWNER, FIRE PREVENTION BUREAU AND CONSULTING ENGINEER.

9. CONTRACTOR SHALL PROVIDE A CENTRAL MASTER ANNUNCIATOR PANEL IN THE ELECTRICAL ROOM AND A REMOTE PANEL IN AN AREA PER OWNERS REPRESENTATIVE AND LOCAL FIRE MARSHAL.

10. ANNUNCIATOR PANEL SHALL BE NONGRAPHIC WITH NAMEPLATE AND LED FOR EACH DEVICE ADDRESS, WITH AUDIBLE ALARM AND KEYED SILENCE SWITCH.

11. CONTRACTOR SHALL PROVIDE ALL CONNECTION TO POWER PANELS, CONDUIT AND WIRE AND CONNECTIONS REQUIRED TO PROVIDE AN OPERATIONAL FIRE ALARM SYSTEM.

12. UNIQUELY LABEL ALL ADDRESSABLE DEVICES TO MATCH FIRE ALARM PROGRAMMING & AS BUILTS. CONTRACTOR TO PROVIDE A HARD AND ELECTRONIC COPY OF ALL PROGRAMMING FOR SITE AND BUILDING CONDITION.

# SYMBOLS

- C — TITLE 24 RELAY CONTROLLED RECEPTACLE AT 18" AFF TO BOTTOM OF DEVICE, PROVIDE WITHIN 6'-0" OF NON CONTROLLED RECEPTACLE. PROVIDE COVER PLATE WITH ENGRAVED "CONTROLLED".
- WP GFCI RECEPTACLE AT 18" AFF TO BOTTOM OF DEVICE
- GFCI RECEPTACLE AT 42" AFF TO BOTTOM OF DEVICE
- SINGLE RECEPTACLE, WALL MOUNTED @ +18" AFF TO BOTTOM OF DEVICE, NEMA 5-20R U.O.N.
- DUPLEX RECEPTACLE, WALL MOUNTED @ +18" AFF TO BOTTOM OF DEVICE, NEMA 5-20R U.O.N.
- I.G. — ISOLATED (ORANGE) GROUND DUPLEX RECEPTACLE, WALL MTD.@18"AFF, NEMA 5-20R U.O.N.
- DOUBLE DUPLEX RECEPTACLE, NEMA 5-20R, WALL MOUNTED @ +18"AFF AT BOTTOM OF DEVICE
- DUPLEX RECEPTACLE, WALL MOUNTED @ +18" TO BOTTOM OF DEVICE NEMA 5-20R U.O.N. TOP RECEPTACLE SWITCHED
- DUPLEX RECEPTACLE, FLOOR MOUNTED, NEMA 5-20R
- CLOCK/SPEAKER BY ENS-IP-SDMF WITH IP SEA-SD MOUNT, PROVIDE & INSTALLED BY CONTRACTOR WITH CAT 5 TO IDF
- DATA OUTLETS, 2 GANG COVER 4SD BOX WITH DEVICES AND 4 CAT 6 CABLES FROM JACK TO MAIN IT RACK ROOM. PROVIDE 1-1/4"C MINIMUM TO CABLE TRAY OR TO IDF IF NO CABLE TRAY IS PRESENT, J-HOOKS ALLOWED IN ACCESSIBLE CEILING
- (2)DATA OUTLETS, 2 GANG FLOOR BOX WITH DEVICES AND 2 CAT 6 CABLES PER NOTES & SPECIFICATION. PROVIDE 1-1/4"C MINIMUM TO CABLE TRAY OR IDF.
- SPECIAL OUTLET, TYPE AS REQUIRED BY EQUIPMENT.
- J — JUNCTION BOX (CEILING MTD.) SIZE PER TABLE AND NEC ARTICLE 314
- J — JUNCTION BOX (WALL MTD.) SIZE PER TABLE AND NEC ARTICLE 314
- T — THERMOSTAT - 36" TO 48" AFF, BOTTOM & TOP OF BOX RESPECTIVELY
- T — TRANSFORMER
- BRANCH CIRCUIT PANELBOARD - 120/208VAC, 3Ø, 4W.
- BRANCH CIRCUIT PANELBOARD - 480/277V, 3Ø, 4W
- 4'X8'X3/4" TELEPHONE BACKBOARD, MARINE PLYWOOD AND PAINTED WITH FIRE RESISTANT PAINT, PER OWNERS REPRESENTATIVE.
- CONDUIT RUN CONCEALED ABOVE CEILING OR IN WALLS,
- CONDUIT RUN CONCEALED BELOW FLOOR OR UNDERGROUND
- 0-10 — LIGHTING CONTROL 0-10V (PURPLE GRAY)
- CS — LOW VOLTAGE CABLE & CONDUIT 3/4"C-1#CAT5 U.O.N. (PER nLIGHT REQUIREMENTS)
- T — COM CIRCUIT WITH (1) CAT 6 CABLE
- P — POWER CONDUIT & CONDUCTORS
- FLEXIBLE CONDUIT (WITH GROUND CONDUCTOR, PROVIDE LIQUID TIGHT CONDUIT IN ALL EXPOSED AREAS)
- #10 — HASH MARKS INDICATE QUANTITY OF #12 CONDUCTORS. NO HASH MARKS INDICATE (2)#12AWG. (PROVIDE GROUND CONDUCTOR IN ALL CONDUITS.) WHERE NO NUMBER IS INDICATED, THE CONDUCTORS ARE #12AWG(MIN.) CONDUIT SIZE IS AS REQUIRED BY ELECTRICAL CODE. (3/4" CONDUIT MINIMUM).
- 2LA 1-3-5,7 — INDICATES A HOMERUN TO PNL 2LA

DRAFTER: CM03 DRAWING FILENAME: 21-375E130 PATHNAME: G:\21\375\EL\Sheets DATE: 14 March 2025 TIME: 3:44 pm

PERFORMING ARTS

COMMUNICATIONS BUILDING

(E) 1-STORY ADMINISTRATION BUILDING

NEW ACUITY ACP PANEL

SEE E131 FOR EMERGENCY LIGHTING PHOTOMETRICS. ALL EXTERIOR FIXTURES NOT NOTED 1 OR 2 SHALL REMAIN AS IS, CONTRACTOR TO ENSURE THESE EXISTING FIXTURES REMAIN ACTIVE AS PRESENTLY WIRED & CONFIGURED

1 NEW
3 TYPICAL
1°C - 4#10 GROUND TYPICAL ENTIRE RUN TO ACP CIRCUITS 10 & 12 (PANEL G CIRCUITS 27 & 29)

SCALE: 1"=20'
0 20 40

## SITE LIGHTING PLAN 1
SCALE: 1"=20'-0" - E130

N

SHEET NOTES:

1. ALL EXISTING EXTERIOR LIGHTING FIXTURES NOT MODIFIED PER THIS SHEET SHALL REMAIN ACTIVE AS IS. CONTRACTOR TO RECONNECT AS REQUIRED

KEY NOTES:

1. EXISTING PEDESTRIAN POLE LIGHT TO REMAIN ACTIVE BUT CONNECT TO ADMIN BUILDING ACUITY ACP LIGHTING CONTROLLER CIRCUITS AS NOTED. PROVIDE 12" x 18" TRAFFIC RATED CONCRETE PULLBOX (PER E601) IF NEEDED TO INTERCEPT EXISTING FEEDER INTO POLE .
2. NEW PEDESTRIAN POLE LIGHT PER DETAIL 2 MATCH EXISTING TYPE, CONNECT TO EM CIRCUITS NOTED.
3. SAW CUT ON JOINT & DOWEL IN NEW CONCRETE TYPICAL FOR ALL RUNS THROUGH EXISTING CONCRETE PAVED AREAS. CONDUIT TO BE A MINIMUM OF 24" BELOW FINISHED GRADE WITH TRACER/WARNING TAPE 6" ABOVE CONDUIT. COMPACTION SHALL BE 90% MINIMUM.
4. NEW 1"C-4#10 & 1#10GROUND TYPICAL.
5. RELOCATE EXISTING POLE LIGHT (VERIFY ON CIVIL PLANS) ACROSS STREET TO 6. PROVIDE NEW 12" X 18" TRAFFIC RATED TIER 22 PULL BOX (FLUSH WITH FINAL GRADE) WITH WP (UL) CONNECTIONS, EXTEND 1"C - 2 #10 & 1 #10 GROUND TO NEW POLE LOCATION. CUT ASPHALT & REPAIR PER CIVIL DETAILS, INCLUDE A MINIMUM OF 24" OF COVER WITH 1 SACK OF CONCRETE SLURRY MIX FOR TRENCH BACKFILL & WARNING/TRACER TAPE ABOVE. PROVIDE NEW POLE BASE PER E601. PROVIDE DEMOLITION TO INCLUDE REMOVAL OF POLE BASE & REPAIR OF SURROUNDING ASPHALT.
6. LOCATION OF NEW LIGHT POLE & BASE PER E601. VERIFY LOCATION ON CIVIL PLANS.

PER DSA IR A-22, NOT FOR DSA REVIEW.

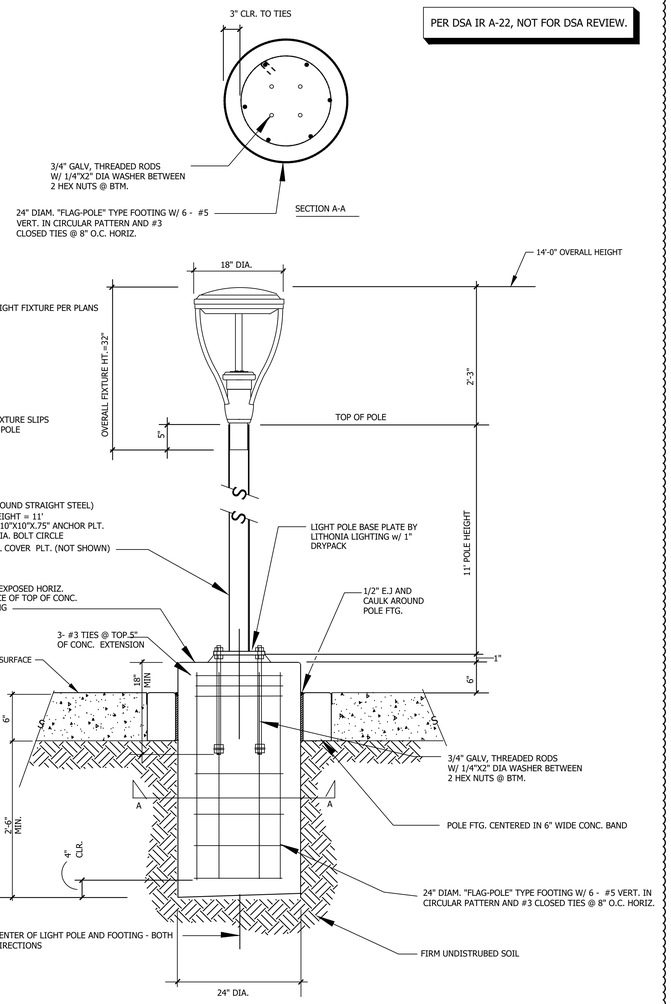


## OT POLE BASE DETAIL 2
SCALE: NTS - E130

Copyright Lucci and Associates Consulting Electrical Engineers. Deviations from this drawing will not be made without their expressed written permission.

DIVISION OF THE STATE ARCHITECT

AMADOR WHITTLE ARCHITECTS, INC.
28328 AGOURA ROAD, SUITE 203
AGOURA HILLS, CA 91301
(805) 530-3938 , (818) 874-0071

Ventura County Community College

PROJECT TITLE
# MOORPARK COLLEGE ADMINISTRATION BUILDING RENOVATION

7075 CAMPUS ROAD
MOORPARK, CA 91320

CONSULTANT
LUCCI & ASSOCIATES INC.
CONSULTING ELECTRICAL ENGINEERS
3251 CORTE MALPASO, #511
CAMARILLO, CA 93012-8094
(805) 389-6520 FAX (805) 389-6519

**LUCCI & ASSOCIATES, INC.** reserve their commonlaw copyright and other property rights in these plans. These plans and drawings are not to be reproduced, changed, or copied in any form or manner whatsoever without first obtaining the expressed written permission and consent of LUCCI & ASSOC. INC nor are they to be assigned to any third party without obtaining said written permission and consent.

STAMPS/SEALS

REGISTERED PROFESSIONAL ENGINEER KENNETH W. LUCCI No. E-13497 Exp. 08/30/2026 ELECTRICAL STATE OF CALIFORNIA

12/08/2023 - DSA RESUBMITTAL

1 ADDENDUM 1, 03-13-2025

SHEET TITLE:
# ADMIN BUILDING SITE LIGHTING PLAN - EGRESS

| PROJECT NO.: | 21-MPC-040 | PROJECT ARCH.: | |
|---|---|---|---|
| DRAWN: | LK/DS | CHECKED: | |

SHEET NUMBER:
# E130

6/04/2024 UPDATE

DATE: 12/08/23 SHEET: ____ OF ____

IF THIS SHEET IS NOT 30" X 42", IT IS NOT FULL SIZE, SCALE ACCORDINGLY
L.A.I.# 21-375

Drafter: CM03 Sheet Size: A1,2D
Plot By: KEN LUCCI
Plot Style Table: ARCH-E1-D3.ctb
Plot Scale: 1=1 Plot Offset: 0,0
Plot Time: 12/8/2023 - 9:58 AM
Xref: G:\21\375\EL\Sheets\21-375E130.dwg
Xref: G:\21\375\EL\Sheets\21-375TB.dwg
Xref: G:\21\375\EL\Sheets\21-375E131-LIGHTING.dwg
Drafter: CM03: G:\21\375\EL\Sheets\21-375E130.dwg; DATE: DEC 08, 2023 TIME: 9:58 AM

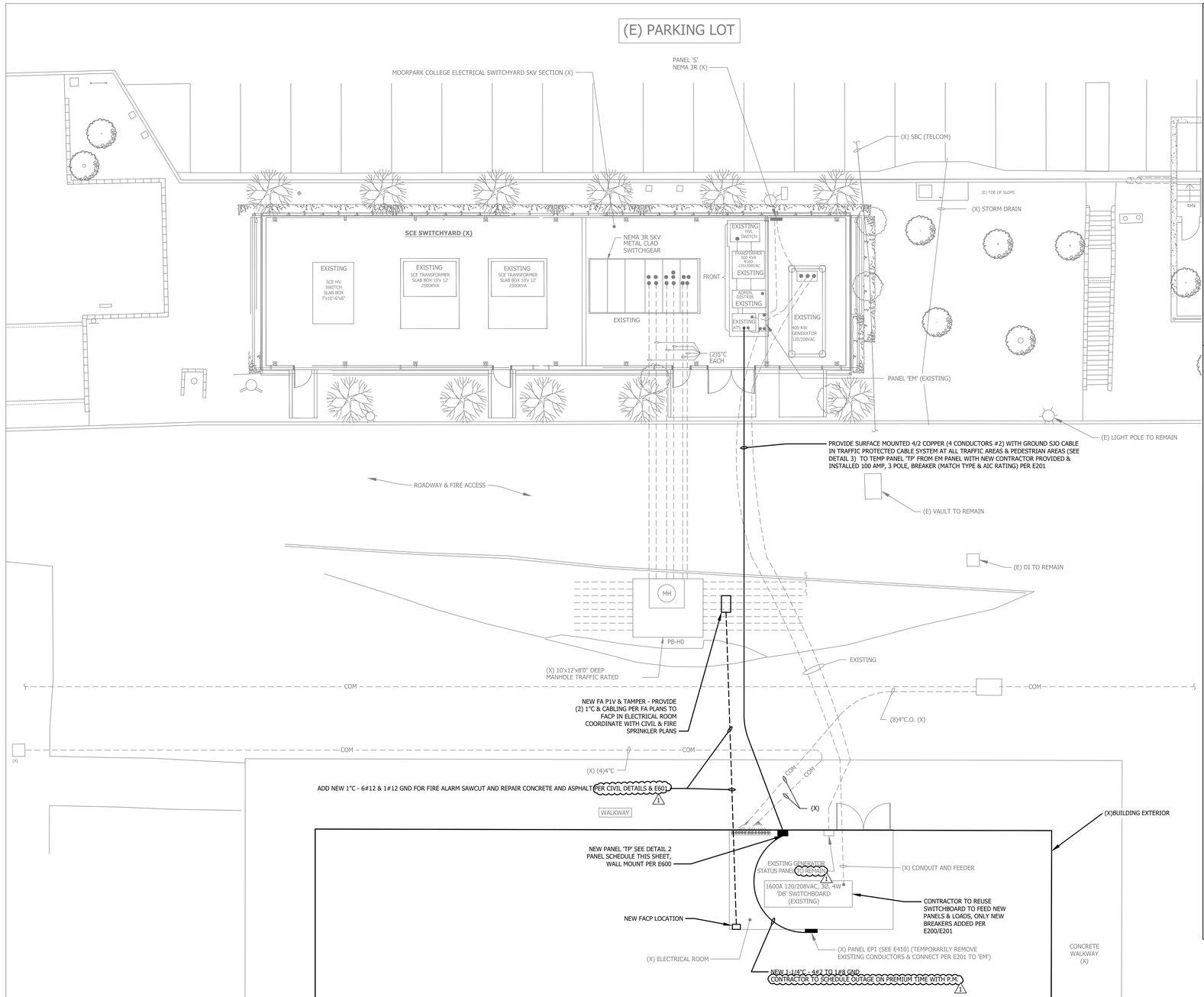


# 01 ADMINISTRATION BUILDING

SCALE: 1/8"=1'-0"
0 4' 8' 16'

## ELECTRICAL SITE PLAN - NEW WORK 1
SCALE: 1/8"=1'-0" - E141

SEE E200 FOR EXISTING ELECTRICAL SINGLE LINE DIAGRAM & E201 FOR NEW ELECTRICAL SINGLE LINE PANEL TP WILL BE NEW & IT IS A TEMPORARY PANEL FOR CONSTRUCTION USE ONLY. A FEW NEW BREAKERS & FEEDERS ARE ADDED TO DISTRIBUTION BOARD DB.

## ATLAS® Heavy Duty Cable Protector Ramps

3 Channels Options, Rated For Vehicles | Industrial Rubber

CONTRACTOR TO PROVIDE CABLE PROTECTOR RAMPS TO MOORPARK COLLEGE AT PROJECT COMPLETION. 1

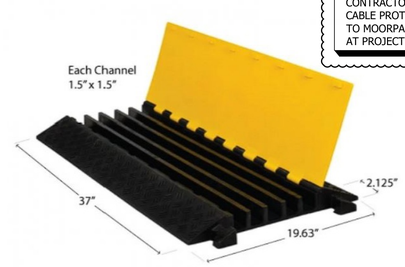


PROVIDE THESE RAMPS IN ALL TRAFFIC & PEDESTRIAN AREAS

## CABLE PROTECTORS 3
SCALE: NONE - E140

**THIS PANEL IS NOT TO BE USED FOR CONSTRUCTION POWER - IT IS ONLY TO POWER THE SITE COM EQUIPMENT WHICH RESIDES IN THIS BUILDING & IS NOT EASILY RELOCATED.**

NEW PANEL (TEMP FOR MPOE/MDF ONLY DURING CONSTRUCTION)

PANEL NUMBER TP | VOLTAGE 120/208 | PHASE 3 | WIRE 4
SOURCE EM | A.I.C. 22 KAIC
PANEL LOCATION ELECTRICAL ROOM | BUS AMPERE RATING 100
■ NEMA 1 ■ COPPER BUSS
■ MAIN CIRCUIT BREAKER 100
■ SURFACE MOUNTING

| L C L | M A I N | R D T | L T E | CIRCUIT DESCRIPTION | LOAD(VA) A | B | C | BRKR POLE | AMP | CKT | PHASE A B C | CKT | BRKR AMP | POLE | LOAD(VA) A | B | C | CIRCUIT DESCRIPTION | M A I N | R D T | L T E | L C L |
|---|---|---|---|---|---|---|---|---|---|---|---|---|---|---|---|---|---|---|---|---|---|---|
| | | | | SPARE 1 | - | | | 1 | 20 | 1 | | 2 | 20 | 1 | - | | | SPARE 1 | | | | |
| | | | | SPARE | | - | | 1 | 20 | 3 | | 4 | 20 | 1 | | - | | SPARE | | | | |
| | | | | SPLIT AC1 | | | 2000 | | 30 | 5 | | 6 | 20 | 1 | | | - | SPARE | | | | |
| | | | | | 2000 | | | 2 | | 7 | | 8 | 20 | 1 | - | | | SPARE | | | | |
| | | | | SPLIT AC2 | | 2000 | | | 30 | 9 | | 10 | 20 | | | - | | SPARE | | | | |
| | | | | | | | 2000 | 2 | | 11 | | 12 | | 2 | | | - | SPARE | | | | |
| | | | | FC-1 | 1000 | | | | 15 | 13 | | 14 | 40 | | - | | | SPARE | | | | |
| | | | | | | 1000 | | | | 15 | | 16 | | | | - | | SPARE | | | | |
| | | | | SPARE | | | - | 3 | | 17 | | 18 | | 3 | | | - | SPARE | | | | |
| | | | | SPARE | - | | | | 30 | 19 | | 20 | 60 | | - | | | SPARE | | | | |
| | | | | SPARE | | - | | | | 21 | | 22 | | | | - | | SPARE | | | | |
| | | | | SPARE | | | - | 3 | | 23 | | 24 | | 3 | | | - | SPARE | | | | |
| | | | | SPARE | - | | | | 20 | 25 | | 26 | 100 | | 5000 | | | PANEL EP1 (MDF ROOM) | | | | |
| | | | | SPARE | | - | | | | 27 | | 28 | | | | 5000 | | | | | | |
| | | | | SPARE | | | - | 3 | | 29 | | 30 | | 3 | | | 5000 | | | | | |
| | | | | 1 TOTALS | 3000 | 3000 | 4000 | | | | | | | | 5000 | 5000 | 5000 | TOTALS | | | | |

L.C.L. VOLT AMPS: . PHASE A . PHASE B . PHASE C .

TOTAL VOLT AMPS: 25000 PHASE A 8000 PHASE B 8000 PHASE C 9000

TOTAL AMPS: 70 PHASE A 66 PHASE B 66 PHASE C 75

## TP PANEL SCHEDULE 2
SCALE: NONE - E140

## KEY MAP

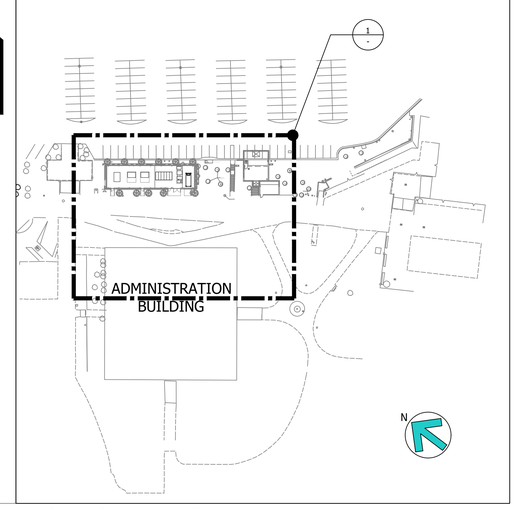



DIVISION OF THE STATE ARCHITECT

AMADOR WHITTLE ARCHITECTS, INC.
28328 AGOURA ROAD, SUITE 203
AGOURA HILLS, CA 91301
(805) 530-3938 , (818) 874-0071


Ventura County Community College

PROJECT TITLE
**MOORPARK COLLEGE ADMINISTRATION BUILDING RENOVATION**

7075 CAMPUS ROAD
MOORPARK, CA 91320

CONSULTANT
LUCCI & ASSOCIATES INC.
CONSULTING ELECTRICAL ENGINEERS
3251 CORTE MALPASO, #511
CAMARILLO, CA 93012-8094
(805) 389-6520 FAX (805) 389-6519


**LUCCI & ASSOCIATES, INC.** reserve their commonlaw copyright and other property rights in these plans. These plans and drawings are not to be reproduced, changed, or copied in any form or manner whatsoever without first obtaining the expressed written permission and consent of LUCCI & ASSOC. INC nor are they to be assigned to any third party without obtaining said written permission and consent.


STAMPS/SEALS

REGISTERED PROFESSIONAL ENGINEER KENNETH W. LUCCI No. E13344 Exp. 09/30/2025 ELECTRICAL STATE OF CALIFORNIA

12/08/2023 - DSA RESUBMITTAL

1 ADDENDUM 1, 03-13-2025

SHEET TITLE:
ELECTRICAL SITE PLAN - NEW WORK

PROJECT NO.: 21-MPC-040 | PROJECT ARCH:
DRAWN: LK/DS | CHECKED:
SHEET NUMBER:

**E141**

6/04/2024 UPDATE

DATE: 12/08/23 | SHEET: ___ OF ___

IF THIS SHEET IS NOT 30" X 42", IT IS NOT FULL SIZE, SCALE ACCORDINGLY
L.A.I.# 21-375


Copyright Lucci and Associates Consulting Electrical Engineers. Deviations from this drawing will not be made without their expressed written permission.



PATHNAME: G:\21\375\EL\Sheets DRAWING FILENAME: 21-375E141 DRAWING DATE: 14 March 2025 TIME: 3:44 pm DRAFTER: CM03

Drafter:CM03 - Room Size: 42.00 x 30.00 Inches (1066.80mm x 762.00mm) Mar 14, 2025 - 3:44pm G:\21\375\EL\Sheets\21-375E141.dwg

Drafter: CM01: G:\21\375\EL\Sheets\21-375E141.dwg: DATE: MAR 13, 2025 TIME: 10:58 AM

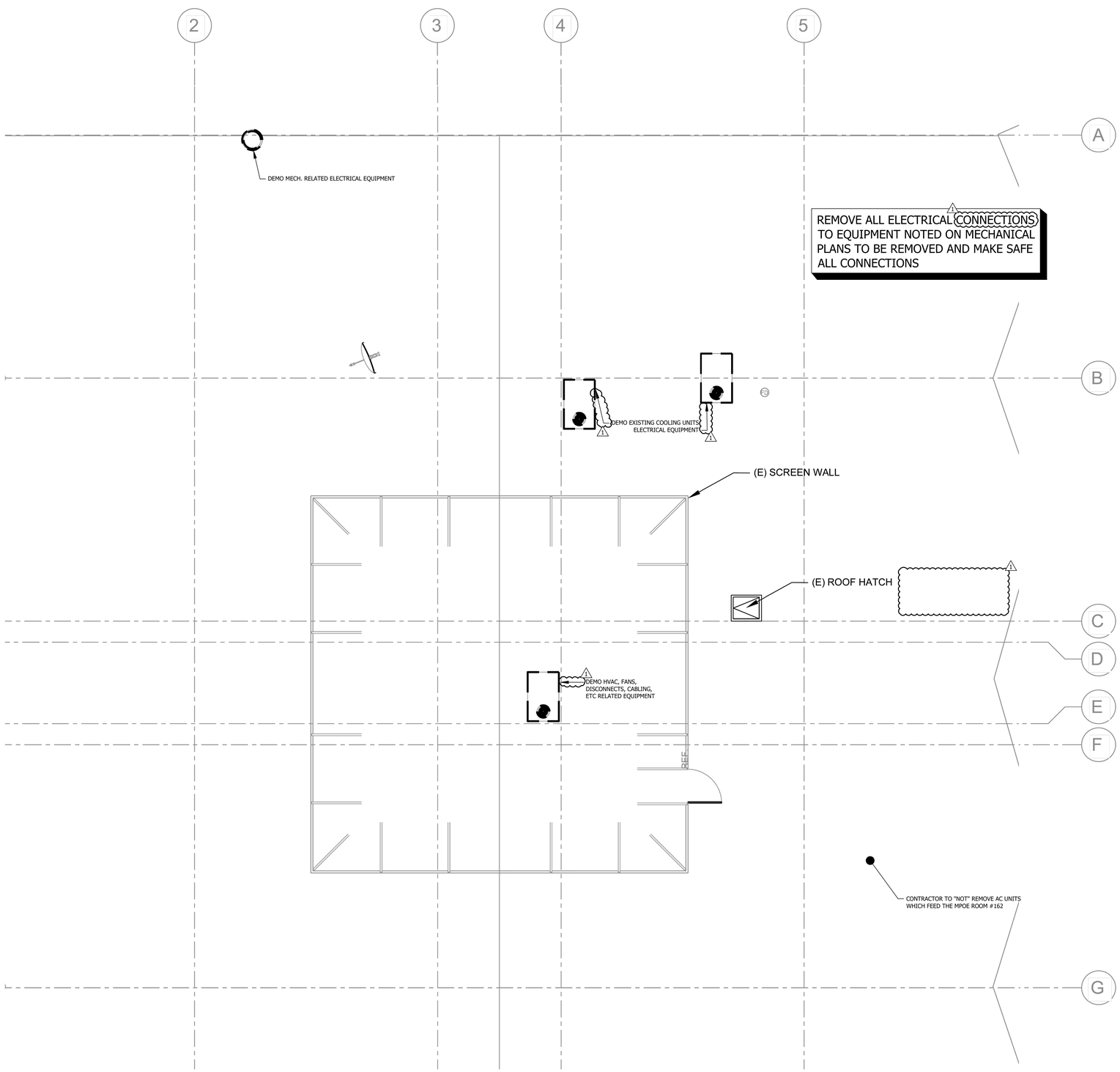


SCALE: 1/4"=1'-0"
0 2' 4' 8'

## ELECTRICAL ROOF PLAN - DEMOLITION 1
SCALE: 1/4"=1'-0"

E145

N

KEY MAP

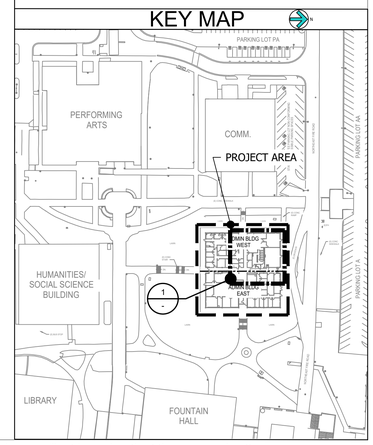


DIVISION OF THE STATE ARCHITECT

AMADOR WHITTLE
ARCHITECTS, INC.
28328 AGOURA ROAD, SUITE 203
AGOURA HILLS, CA 91301
(805) 530-3938 , (818) 874-0071

Ventura County Community College

PROJECT TITLE
**MOORPARK COLLEGE ADMINISTRATION BUILDING RENOVATION**

7075 CAMPUS ROAD
MOORPARK, CA 91320

CONSULTANT
LUCCI & ASSOCIATES INC.
CONSULTING ELECTRICAL ENGINEERS
3251 CORTE MALPASO, #511
CAMARILLO, CA 93012-8094
(805) 389-6520 FAX (805) 389-6519

**LUCCI & ASSOCIATES, INC.** reserve their commonlaw copyright and other property rights in these plans. These plans and drawings are not to be reproduced, changed, or copied in any form or manner whatsoever without first obtaining the expressed written permission and consent of LUCCI & ASSOC. INC nor are they to be assigned to any third party without obtaining said written permission and consent.

STAMPS/SEALS

REGISTERED PROFESSIONAL ENGINEER KENNETH W. LUCCI No. 16132 Exp. 09/30/2026 ELECTRICAL STATE OF CALIFORNIA

12/08/2023 - DSA RESUBMITTAL

1 ADDENDUM 1, 03-13-2025

SHEET TITLE:
DEMO ROOF PLAN

PROJECT NO.: 21-MPC-040
PROJECT ARCH:
DRAWN: LK/DS
CHECKED:

SHEET NUMBER:
**E145**

6/04/2024 UPDATE

DATE: 12/08/23 SHEET: ____ OF ____

IF THIS SHEET IS NOT 30" X 42", IT IS NOT FULL SIZE, SCALE ACCORDINGLY
L.A.I.# 21-375

Copyright Lucci and Associates Consulting Electrical Engineers. Deviations from this drawing will not be made without their expressed written permission.

DRAFTER: CM03 DRAWING FILENAME: 21-375E145 PATHNAME: G:\21\375\EL\Sheets DATE: 14 March 2025 TIME: 3:45 pm

Drafter: CM03 Paper Size: 12.5
Dwg Scale: 1:1.000000
Dwg Units: Inches
XREF:G:\21\375\EL\xref\x21-375T-E.dwg
XREF:G:\21\375\EL\xref\x21-375Title.dwg

Drafter: CM03; G:\21\375\EL\Sheets\21-375E423.dwg; DATE: APR 14, 2023 TIME: 9:39 AM

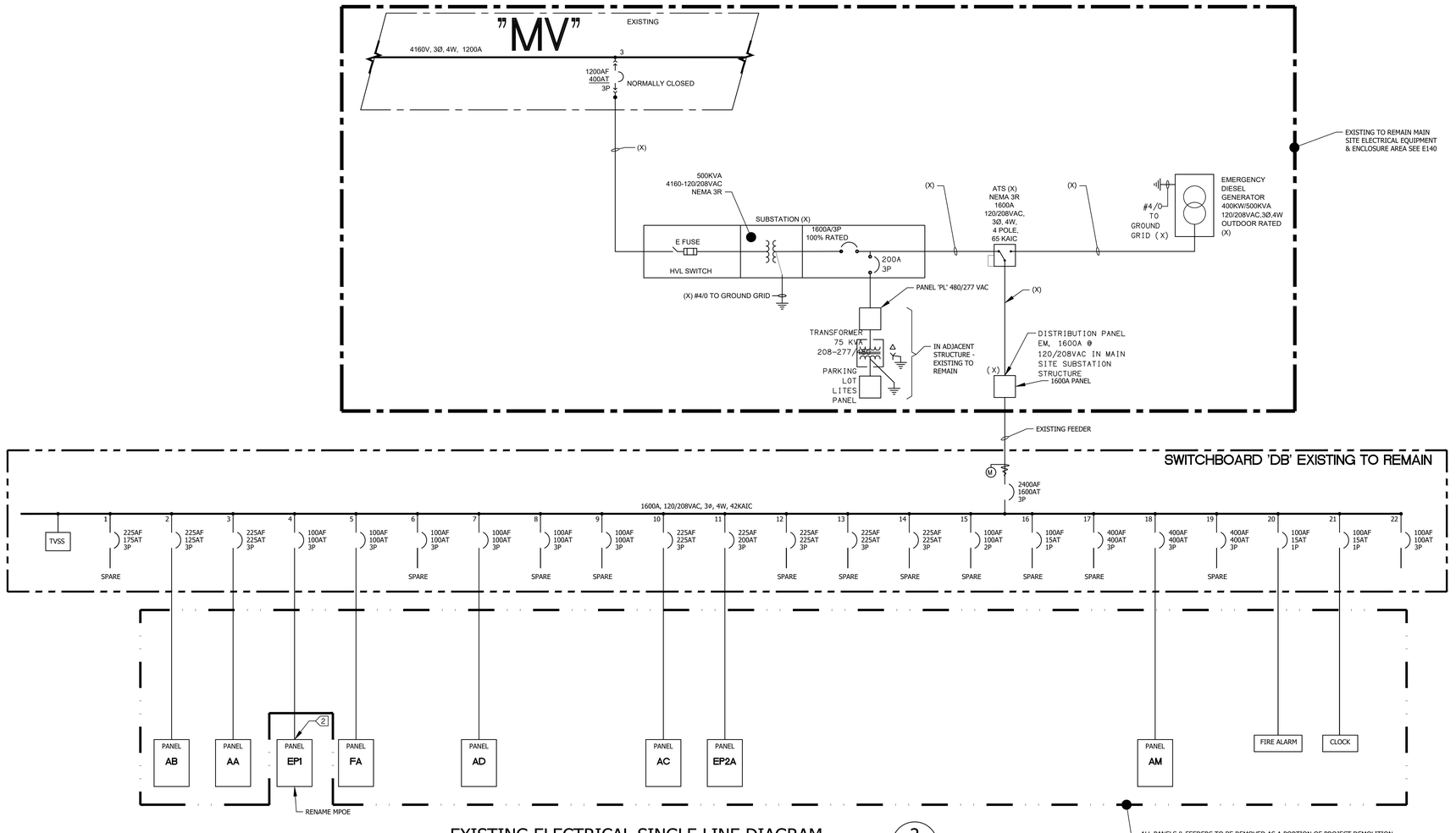


## EXISTING ELECTRICAL SINGLE LINE DIAGRAM

SCALE: NONE

2 / E200

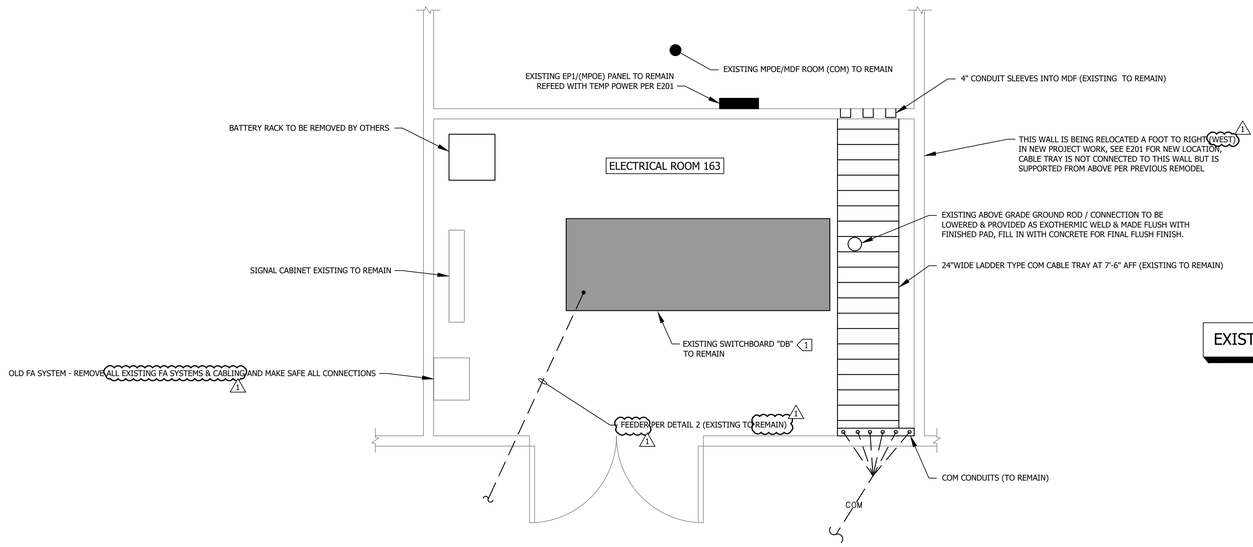


EXISTING - SEE E140 FOR NEW WORK

1/2" = 1'-0"
0 1' 2' 4'

## EXISTING ADMINISTRATION BUILDING ELECTRICAL ROOM 160

SCALE: 1/2"=1'-0"

EXISTING CONDITION

1 / E200

N

GENERAL NOTES:

1. CONTRACTOR TO FIELD VERIFY ALL EXISTING CONDITIONS

KEY NOTES:

1 EXISTING 120/208VAC SERVICE ENTRANCE 1600 AMP SWITCHBOARD 'DB' 42KAIC WITH 1600A MAIN.

2 DISCONNECT PANEL EP1 AND CONNECT TO NEW PANEL 'TP' FEED PER E201. FEED TO BE PROVIDED TO MAINTAIN SITE POWER TO ALLOW MDF/MPOE ROOM FOR CAMPUS WIDE COM TO REMAIN ACTIVE DURING PROJECT CONSTRUCTION DURATION.

DIVISION OF THE STATE ARCHITECT

AMADOR WHITTLE
ARCHITECTS, INC.
28328 AGOURA ROAD, SUITE 203
AGOURA HILLS, CA 91301
(805) 530-3938 , (818) 874-0071

Ventura County Community College

PROJECT TITLE

# MOORPARK COLLEGE ADMINISTRATION BUILDING RENOVATION

7075 CAMPUS ROAD
MOORPARK, CA 91320

CONSULTANT
LUCCI & ASSOCIATES INC.
CONSULTING ELECTRICAL ENGINEERS
3251 CORTE MALPASO, #511
CAMARILLO, CA 93012-8094
(805) 389-6520 FAX (805) 389-6519

**LUCCI & ASSOCIATES, INC.** reserve their commonlaw copyright and other property rights in these plans. These plans and drawings are not to be reproduced, changed, or copied in any form or manner whatsoever without first obtaining the expressed written permission and consent of LUCCI & ASSOC. INC nor are they to be assigned to any third party without obtaining said written permission and consent.

STAMPS/SEALS

REGISTERED PROFESSIONAL ENGINEER
KENNETH W. LUCCI
No. E-14167
Exp. 09/30/2026
ELECTRICAL
STATE OF CALIFORNIA

12/08/2023 - DSA RESUBMITTAL

1 ADDENDUM 1, 03-13-2025

SHEET TITLE:

# EXISTING ELEC. SINGLE LINE DIAGRAM & EXISTING ADMIN. BLDG. ELEC. RM.

| PROJECT NO.: | 21-MPC-040 | PROJECT ARCH: | |
|---|---|---|---|
| DRAWN: | LK/DS | CHECKED: | |

SHEET NUMBER:

# E200

6/04/2024 UPDATE

DATE: 12/08/23 SHEET: ____ OF ____

IF THIS SHEET IS NOT 30" X 42", IT IS NOT FULL SIZE, SCALE ACCORDINGLY
L.A.I.# 21-375

Copyright Lucci and Associates Consulting Electrical Engineers. Deviations from this drawing will not be made without their expressed written permission.

PATHNAME: G:\21\375\EL\Sheets DRAWING FILENAME: 21-375E200 DRAFTER: CM03 DATE: 14 March 2025 TIME: 3:45 pm

Drafter: CM03 - Revit Ver: 13.0
Last Saved By: Christopher Maestrini 11:09:20 AM
Plot Date: 3/14/2025 3:45pm
Plot By: CM03
W:\ET\21\375\Sheets\21-375E200.dwg

Drafter: CM01 - G:\21\375\EL\Sheets\21-375E200.dwg - DATE: DEC 08, 2023 TIME: 10:01 AM

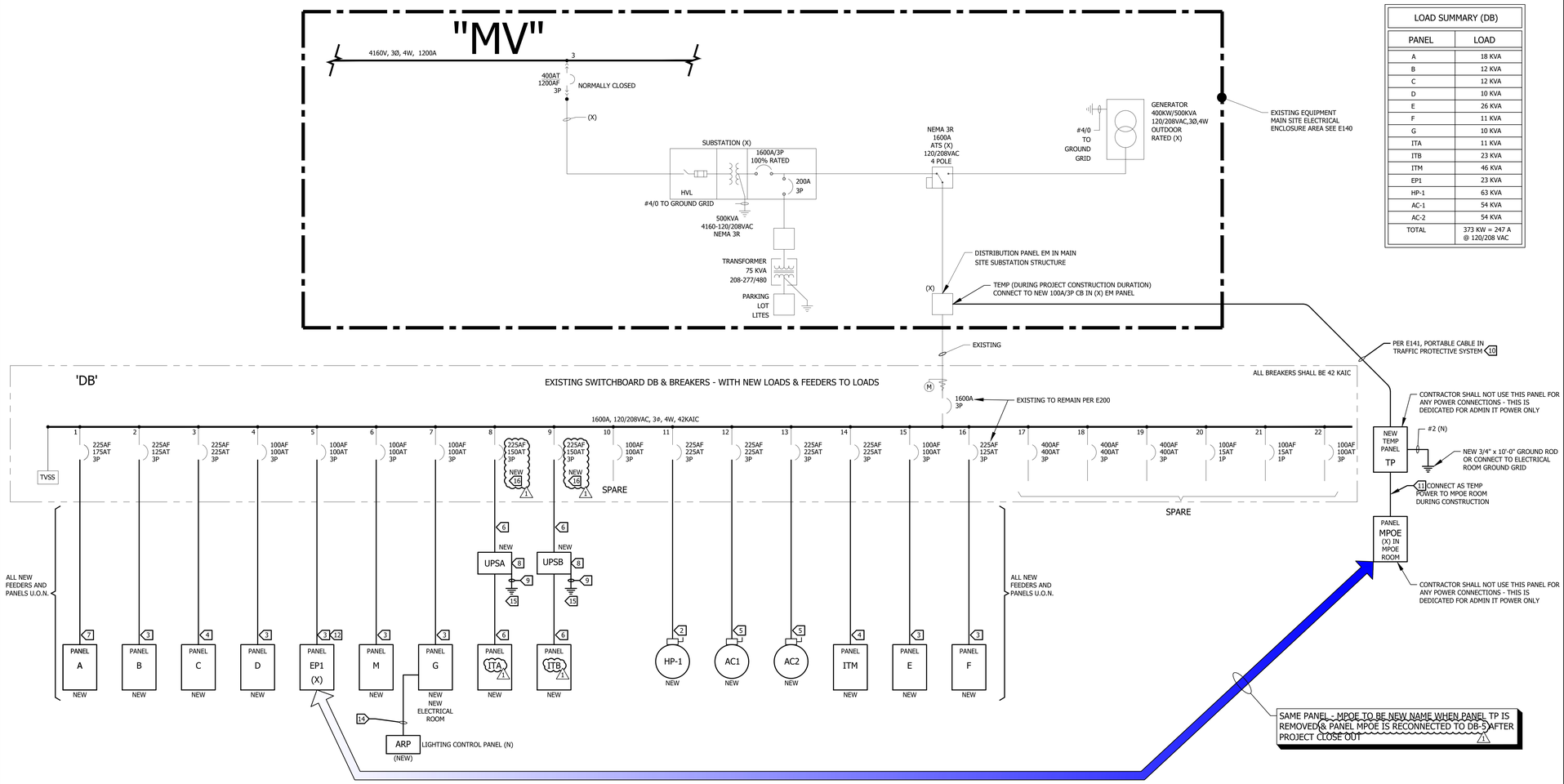


## PARTIAL ELECTRICAL SINGLE LINE DIAGRAM 2

SCALE: NONE - E201

| LOAD SUMMARY (DB) | |
|---|---|
| PANEL | LOAD |
| A | 18 KVA |
| B | 12 KVA |
| C | 12 KVA |
| D | 10 KVA |
| E | 26 KVA |
| F | 11 KVA |
| G | 10 KVA |
| ITA | 11 KVA |
| ITB | 23 KVA |
| ITM | 46 KVA |
| EP1 | 23 KVA |
| HP-1 | 63 KVA |
| AC-1 | 54 KVA |
| AC-2 | 54 KVA |
| TOTAL | 373 KW = 247 A @ 120/208 VAC |

KEY NOTES (NEW WORK):

1. EXISTING 120/208VAC SERVICE ENTRANCE 1600 AMP SWITCHBOARD 'DB' 42KAIC WITH 1600A MAIN & (10) 100A/3P, (6) 225A/3P, & (3) 400A/3P CB OVER EXISTING SECONDARY CONDUITS.

NEW:
2. 2-1/2"C - 3#4/0 & 1#4 GND COPPER (EMT).
3. 1-1/2"C - 4#1 & 1#8 GND COPPER (EMT).
4. 2-1/2"C - 4#4/0 & 1#4 GND COPPER (EMT).
5. 2-1/2"C - 3#4/0 & 1#4 GND COPPER (EMT).
6. 2"C - 4#1/0 & 1#4 GND & 1#4 ISO GND COPPER (EMT).
7. 2"C - 4#2/0 & 1#6 GROUND EMT.
8. UPS SYSTEM PROVIDED BY CAMPUS IT DEPARTMENT BUT CONTRACTOR INSTALLED & CONNECTED.
9. 3/4" PVC WITH #1/0 ISO GROUND TO DP GROUND.
10. JACKETED SJO WP CABLE WITH 4#1 & 1#8 GROUND
11. (N) 1-1/4"C - 4#2 & 1#8 GND.
12. RECONNECT EXISTING FEEDER AT COMPLETION OF PROJECT.
13. LOCATION OF EXISTING GROUND ROD WITH RO1 END ABOVE GRADE BY ABOUT 12 INCHES. CUT ROD AND RECONNECT VIA EXOTHERMIC WELD TO GROUND CONDUCTOR SO FINISHED GROUND ROD TOP IS BELOW GRADE. CAP WITH CONCRETE FLUSH TO GRADE.
14. 1"C - 10#10 & 1#10 GND (NEW)
15. (3) 3/4" x 10'-0" GROUND RODS SPACED 15'-0" APART WITH GROUND WELLS PER E600 SERIES ALL CAD WELDED & CONNECTED TOGETHER, CONNECT UPSA & UPSB GROUNDS TOGETHER WITH 1/0 COPPER.
16. MATCH BREAKER TYPE & AIC RATING.

ALL ELECTRICAL PANELS, BREAKERS, ETC SHALL BE CAMPUS STANDARD SQUARE D.

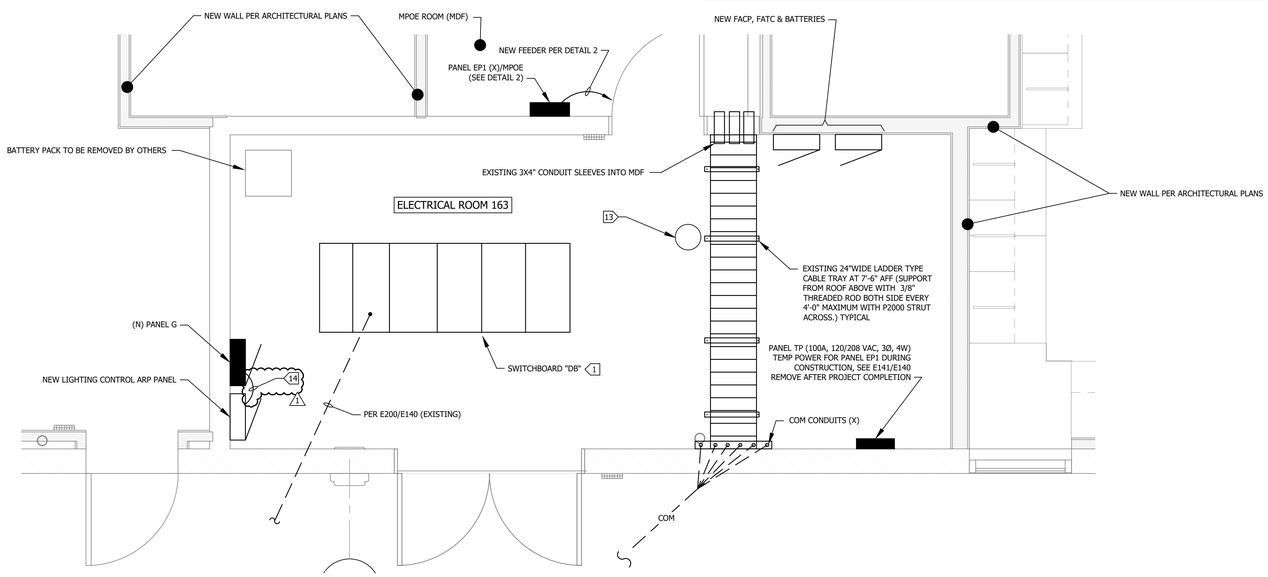


## ADMINISTRATION BUILDING ELECTRICAL ROOM 163 1

SCALE: 1/2"=1'-0" NEW WORK CONDITION - E201

1/2" - 1'-0"
0 1' 2' 4'

N


DIVISION OF THE STATE ARCHITECT

AMADOR WHITTLE ARCHITECTS, INC.
28328 AGOURA ROAD, SUITE 203
AGOURA HILLS, CA 91301
(805) 530-3938 , (818) 874-0071


Ventura County Community College

PROJECT TITLE
**MOORPARK COLLEGE ADMINISTRATION BUILDING RENOVATION**

7075 CAMPUS ROAD
MOORPARK, CA 91320


CONSULTANT
LUCCI & ASSOCIATES INC.
CONSULTING ELECTRICAL ENGINEERS
3251 CORTE MALPASO, #511
CAMARILLO, CA 93012-8094
(805) 389-6520 FAX (805) 389-6519



**LUCCI & ASSOCIATES, INC.** reserve their commonlaw copyright and other property rights in these plans. These plans and drawings are not to be reproduced, changed, or copied in any form or manner whatsoever without first obtaining the expressed written permission and consent of LUCCI & ASSOC. INC nor are they to be assigned to any third party without obtaining said written permission and consent.


STAMPS/SEALS

REGISTERED PROFESSIONAL ENGINEER KENNETH W. LUCCI No. E14584 Exp. 08/30/2026 ELECTRICAL STATE OF CALIFORNIA

12/08/2023 - DSA RESUBMITTAL

1 ADDENDUM 1, 03-13-2025

SHEET TITLE:
ADMIN. BLDG. ELEC. RM. & PARTIAL ELEC. SINGLE LINE DIAGRAM - NEW WORK

| PROJECT NO.: | 21-MPC-040 | PROJECT ARCH: | |
|---|---|---|---|
| DRAWN: | LK/DS | CHECKED: | |

SHEET NUMBER:

**E201**

6/04/2024 UPDATE

DATE: 12/08/23 SHEET: ____ OF ____

IF THIS SHEET IS NOT 30" X 42", IT IS NOT FULL SIZE, SCALE ACCORDINGLY
L.A.I.# 21-375


Copyright Lucci and Associates Consulting Electrical Engineers. Deviations from this drawing will not be made without their expressed written permission.



PATHNAME: G:\21\375\ELSheets DATE: 14 March 2025 TIME: 3:45 pm
DRAWING FILENAME: 21-375E201
DRAFTER: CM03
Drafter:CM03 Paper Size: 12.0 X 24.0in Scale:1.0000 Date:12/7/2023 Time:4:56:57 PM User:G:\21\375\ELSheets\21-375E201.dwg

## NEW PANEL (1)

PANEL NUMBER G | VOLTAGE 120/208 | PHASE 3 | WIRE 4
SOURCE DB | A.I.C. 22,000
PANEL LOCATION ELECTRICAL ROOM | BUS AMPERE RATING 100

■ NEMA 1 ■ COPPER BUSS
■ MAIN LUGS ONLY
■ SURFACE MOUNTING

| LCL | MCB | RSTL | CIRCUIT DESCRIPTION | LOAD(VA) A | B | C | BRKR POLE | AMP | CKT | PHASE A B C | CKT | BRKR AMP | POLE | LOAD(VA) A | B | C | CIRCUIT DESCRIPTION | MCB | RSTL | LCL |
|---|---|---|---|---|---|---|---|---|---|---|---|---|---|---|---|---|---|---|---|---|
| | | | SPARE | - | | | 1 | 20 | 1 | | 2 | 20 | 1 | 500 | | | FIRE ALARM | | | |
| | | | | | - | | 1 | 20 | 3 | | 4 | 20 | 1 | | 500 | | | | | |
| | | | | | | - | 1 | 20 | 5 | | 6 | 20 | 1 | | | 500 | | | | |
| | | | | - | | | 1 | 20 | 7 | | 8 | 20 | 1 | - | | | SPARE | | | |
| | | | | | - | | 1 | 20 | 9 | | 10 | 20 | 1 | | - | | | | | |
| | | | | | | - | 1 | 20 | 11 | | 12 | 20 | 1 | | | - | | | | |
| | 1 | | ELECTRICAL ROOM RECEPT | 180 | | | 1 | 20 | 13 | | 14 | 20 | 1 | - | | | | | | |
| | 1 | | | | 180 | | 1 | 20 | 15 | | 16 | 20 | 1 | | - | | | | | |
| | 1 | | | | | 180 | 1 | 20 | 17 | | 18 | 20 | 1 | | | - | | | | |
| | 1 | | LIGHTING (ARP) | 180 | | | 1 | 20 | 19 | | 20 | 20 | 1 | - | | | | | | |
| | | | | | 600 | | 1 | 20 | 21 | | 22 | 20 | 1 | | - | | | | | |
| | | | | | | 600 | 1 | 20 | 23 | | 24 | 20 | 1 | | | - | | | | |
| | | | | 600 | | | 1 | 20 | 25 | | 26 | 20 | 1 | - | | | | | | |
| | | | | | 600 | | 1 | 20 | 27 | | 28 | 20 | 1 | | 100 | | NLIGHT | | | |
| | | | | | | 600 | 1 | 20 | 29 | | 30 | 20 | 1 | | | 100 | | | | |
| | | | TOTALS | 960 | 1380 | 1380 | | | | | | | | 500 | 600 | 600 | TOTALS | | | |

L.C.L. VOLT AMPS: . PHASE A . PHASE B . PHASE C .

TOTAL VOLT AMPS: 5420 PHASE A 1460 PHASE B 1980 PHASE C 1980

TOTAL AMPS: 15 PHASE A 12 PHASE B 17 PHASE C 17

RED BREAKER WITH LOCK ON

TO ARP PANEL

## NEW PANEL

PANEL NUMBER F | VOLTAGE 120/208 | PHASE 3 | WIRE 4
SOURCE DB | A.I.C. 22,000
PANEL LOCATION OPEN OFFICE | BUS AMPERE RATING 225

■ NEMA 1 ■ COPPER BUSS
■ MAIN LUGS ONLY
■ FLUSH MOUNTING

| LCL | MCB | RSTL | CIRCUIT DESCRIPTION | LOAD(VA) A | B | C | BRKR POLE | AMP | CKT | PHASE A B C | CKT | BRKR AMP | POLE | LOAD(VA) A | B | C | CIRCUIT DESCRIPTION | MCB | RSTL | LCL |
|---|---|---|---|---|---|---|---|---|---|---|---|---|---|---|---|---|---|---|---|---|
| | 2 | | ROOM 103 RECEPT | 360 | | | 1 | 20 | 1 | | 2 | 20 | 1 | " | | | SPARE | | | |
| | 2 | | | | 360 | | 1 | 20 | 3 | | 4 | 20 | 1 | | " | | | | | |
| | 2 | | | | | 360 | 1 | 20 | 5 | | 6 | 20 | 1 | | | " | | | | |
| | 2 | | ROOM 106 RECEPT | 360 | | | 1 | 20 | 7 | | 8 | 20 | 1 | " | | | | | | |
| | 2 | | | | 360 | | 1 | 20 | 9 | | 10 | 20 | 1 | | " | | | | | |
| | 2 | | | | | 360 | 1 | 20 | 11 | | 12 | 20 | 1 | | | " | | | | |
| | 2 | | ROOM 107 RECEPT | 360 | | | 1 | 20 | 13 | | 14 | 20 | 1 | " | | | | | | |
| | 2 | | | | 360 | | 1 | 20 | 15 | | 16 | 20 | 1 | | " | | | | | |
| | 2 | | | | | 360 | 1 | 20 | 17 | | 18 | 20 | 1 | | | " | | | | |
| | 2 | | ROOM 108 RECEPT | 360 | | | 1 | 20 | 19 | | 20 | 20 | 1 | 360 | | | BREAK ROOM RECEPT | | | |
| | 2 | | | | 360 | | 1 | 20 | 21 | | 22 | 20 | 1 | | 360 | | | | | |
| | 2 | | | | | 360 | 1 | 20 | 23 | | 24 | 20 | 1 | | | 360 | | | | |
| | 2 | | CONFERENCE | 360 | | | 1 | 20 | 25 | | 26 | 20 | 1 | 360 | | | | | | |
| | 2 | | | | 360 | | 1 | 20 | 27 | | 28 | 20 | 1 | | 360 | | | | | |
| | 2 | | | | | 360 | 1 | 20 | 29 | | 30 | 20 | 1 | | | 360 | ROOM 104 RECEPT | | | |
| | 2 | | POWER POLE #1 | 360 | | | 1 | 20 | 31 | | 32 | 20 | 1 | 360 | | | | | | |
| | 2 | | | | 360 | | 1 | 20 | 33 | | 34 | 20 | 1 | | 360 | | | | | |
| | 2 | | | | | 360 | 1 | 20 | 35 | | 36 | 20 | 1 | | | 360 | ROOM 106 RECEPT | | | |
| | 2 | | | 360 | | | 1 | 20 | 37 | | 38 | 20 | 1 | 360 | | | | | | |
| | 2 | | | | 360 | | 1 | 20 | 39 | | 40 | 20 | 1 | | 360 | | | | | |
| | 2 | | POWER POLE #2 | 360 | | | 1 | 20 | 41 | | 42 | 20 | 1 | | | 360 | POWER POLE #3 | | | |
| | 2 | | | | 360 | | 1 | 20 | 43 | | 44 | 20 | 1 | 360 | | | | | | |
| | 2 | | | | | 360 | 1 | 20 | 45 | | 46 | 20 | 1 | | 360 | | | | | |
| | 2 | | | | | 360 | 1 | 20 | 47 | | 48 | 20 | 1 | | | 360 | | | | |
| | 2 | | SPARE | - | | | 1 | 20 | 49 | | 50 | 20 | 1 | 360 | | | SPARE | | | |
| | | | | | - | | 1 | 20 | 51 | | 52 | 20 | 1 | | - | | | | | |
| | | | | | | - | 1 | 20 | 53 | | 54 | 20 | 1 | | | - | | | | |
| | | | | - | | | 1 | 20 | 55 | | 56 | 20 | 1 | - | | | | | | |
| | | | | | - | | 1 | 20 | 57 | | 58 | 20 | 1 | | - | | | | | |
| | | | | | | - | 1 | 20 | 59 | | 60 | 20 | 1 | | | - | | | | |
| | | | | - | | | 1 | 20 | 61 | | 62 | 20 | 1 | - | | | | | | |
| | | | | | - | | 1 | 20 | 63 | | 64 | 20 | 1 | | - | | | | | |
| | | | | | | - | 1 | 20 | 65 | | 66 | 20 | 1 | | | - | | | | |
| | | | | - | | | 1 | 20 | 67 | | 68 | 20 | 1 | - | | | | | | |
| | | | | | - | | 1 | 20 | 69 | | 70 | 20 | 1 | | - | | | | | |
| | | | | | | - | 1 | 20 | 71 | | 72 | 20 | 1 | | | - | | | | |
| | | | TOTALS | 3240 | 2880 | 2880 | | | | | | | | 2160 | 1800 | 1800 | TOTALS | | | |

L.C.L. VOLT AMPS: . PHASE A . PHASE B . PHASE C .

TOTAL VOLT AMPS: 14760 PHASE A 5400 PHASE B 4680 PHASE C 4680

TOTAL AMPS: 41 PHASE A 45 PHASE B 39 PHASE C 39

ISOLATED GROUND PANEL

## NEW PANEL

PANEL NUMBER ITM | VOLTAGE 225 | PHASE 3 | WIRE 4
SOURCE DB | A.I.C. 22,000
PANEL LOCATION IT ROOM | BUS AMPERE RATING 225

■ NEMA 1 ■ COPPER BUSS
■ MAIN CIRCUIT BREAKER 225
■ SURFACE MOUNTING

| LCL | MCB | RSTL | CIRCUIT DESCRIPTION | LOAD(VA) A | B | C | BRKR POLE | AMP | CKT | PHASE A B C | CKT | BRKR AMP | POLE | LOAD(VA) A | B | C | CIRCUIT DESCRIPTION | MCB | RSTL | LCL |
|---|---|---|---|---|---|---|---|---|---|---|---|---|---|---|---|---|---|---|---|---|
| | | | SS1B (COM) | 5500 | | | | 60 | 1 | | 2 | 15 | | 300 | | | SS1A (COM) | | | |
| | | | | | 5500 | | | | 3 | | 4 | | | | 300 | | | | | |
| | | | | | | 5500 | 3 | | 5 | | 6 | 3 | | | | 300 | | | | |
| | | | SS2B (COM) | 5500 | | | | 60 | 7 | | 8 | 15 | | 300 | | | SS2A (COM) | | | |
| | | | | | 5500 | | | | 9 | | 10 | | | | 300 | | | | | |
| | | | | | | 5500 | 3 | | 11 | | 12 | 3 | | | | 300 | | | | |
| | | | SS3A (MDF) | 2500 | | | | 20 | 13 | | 14 | 20 | 1 | - | | | SPARE | | | |
| | | | | | 2500 | | | | 15 | | 16 | 20 | 1 | | - | | | | | |
| | | | SS4A (MDF) | | | 2500 | 2 | 20 | 17 | | 18 | 20 | 1 | | | - | | | | |
| | | | SPARE | 2500 | | | 2 | | 19 | | 20 | 20 | 1 | - | | | | | | |
| | | | | | - | | | 30 | 21 | | 22 | 20 | 1 | | - | | | | | |
| | | | | | | - | 2 | | 23 | | 24 | 20 | 1 | | | - | | | | |
| | | | | - | | | | 30 | 25 | | 26 | 20 | 1 | - | | | | | | |
| | | | | | - | | 2 | | 27 | | 28 | 20 | 1 | | - | | | | | |
| | | | | | | - | 1 | 20 | 29 | | 30 | 20 | 1 | | | - | | | | |
| | | | | - | | | 1 | 20 | 31 | | 32 | 20 | 1 | 180 | | | IT ROOM RECEPT | | | 1 |
| | | | | | - | | 1 | 20 | 33 | | 34 | 20 | 1 | | 180 | | | | | 1 |
| | | | | | | - | 1 | 20 | 35 | | 36 | 20 | 1 | | | 180 | | | | 1 |
| | | | | - | | | 1 | 20 | 37 | | 38 | 20 | 1 | 180 | | | | | | 1 |
| | | | | | - | | 1 | 20 | 39 | | 40 | 20 | 1 | | 180 | | | | | 1 |
| 1 | | | SMOKE DETECTOR | | | 100 | 1 | 20 | 41 | | 42 | 20 | 1 | | | 180 | | | | 1 |
| | | | TOTALS | 16000 | 13500 | 13600 | | | | | | | | 960 | 960 | 960 | TOTALS | | | |

L.C.L. VOLT AMPS: . PHASE A . PHASE B . PHASE C .

TOTAL VOLT AMPS: 45980 PHASE A 16960 PHASE B 14460 PHASE C 14560

TOTAL AMPS: 68 PHASE A 75 PHASE B 64 PHASE C 65

## NEW PANEL

PANEL NUMBER M | VOLTAGE 120/208VAC | PHASE 3 | WIRE 4
SOURCE DB | A.I.C. 22,000
PANEL LOCATION PER E401/E402 (1) | BUS AMPERE RATING 225

■ NEMA 1 ■ COPPER BUSS
■ MAIN LUGS ONLY
■ FLUSH MOUNTING

| LCL | MCB | RSTL | CIRCUIT DESCRIPTION | LOAD(VA) A | B | C | BRKR POLE | AMP | CKT | PHASE A B C | CKT | BRKR AMP | POLE | LOAD(VA) A | B | C | CIRCUIT DESCRIPTION | MCB | RSTL | LCL |
|---|---|---|---|---|---|---|---|---|---|---|---|---|---|---|---|---|---|---|---|---|
| | | | EF1 | 250 | | | 1 | 15 | 1 | | 2 | 40 | | 2250 | | | WH-1 | | 1 | L |
| | | | EF2 | | 250 | | 1 | 15 | 3 | | 4 | | 2 | | 2250 | | | | 1 | L |
| | | | EF3 | | | 250 | 1 | 15 | 5 | | 6 | 20 | 1 | | | 100 | LAV MENS | | - | |
| | | | PUMP 1 (P1) | 600 | | | 2 | 15 | 7 | | 8 | 20 | 1 | 100 | | | LAV WOMEN | | - | |
| | | | | | 600 | | | | 9 | | 10 | 20 | 1 | | 100 | | GENDER LAV | | - | |
| | | | PUMP 2 | | | 600 | 3 | 15 | 11 | | 12 | 20 | 1 | | | 560 | ROOF RECEPT | | 2 | |
| | | | | 600 | | | | | 13 | | 14 | 20 | 1 | 360 | | | | | 2 | |
| | | | | | 600 | | 3 | | 15 | | 16 | 20 | 1 | | 100 | | SMOKE DETECTOR | | | 1 |
| | | | SPARE | | | - | 1 | 20 | 17 | | 18 | 20 | 1 | | | 360 | MECH ROOM RECEPT | | | |
| | | | | - | | | 1 | 20 | 19 | | 20 | 20 | 1 | 360 | | | | | | |
| | | | | | - | | 1 | 20 | 21 | | 22 | 20 | 1 | | 240 | | RP (RECIRC PUMP) | | | |
| | | | | | | - | 1 | 20 | 23 | | 24 | 20 | 1 | | | 200 | CONDENSATE PUMP | | | |
| | | | | - | | | 1 | 20 | 25 | | 26 | | 2 | 200 | | | | | | |
| | | | | | - | | 1 | 20 | 27 | | 28 | 20 | 1 | | 100 | | DUCT DETECTOR | | | 1 |
| | | | | | | - | 1 | 20 | 29 | | 30 | 20 | 1 | | | 100 | | | | 1 |
| | | | | - | | | 1 | 20 | 31 | | 32 | 20 | 1 | 100 | | | FIRE ALARM BELL | | | 1 |
| | | | | | - | | 1 | 20 | 33 | | 34 | 20 | 1 | | 1 | - | SPARE | | | 1 |
| | | | | | | - | 1 | 20 | 35 | | 36 | 20 | 1 | | | - | | | | 1 |
| | | | | - | | | 1 | 20 | 37 | | 38 | 20 | 1 | - | | | | | | |
| | | | | | - | | 1 | 20 | 39 | | 40 | 20 | 1 | | - | | | | | |
| | | | | | | - | 1 | 20 | 41 | | 42 | 20 | 1 | | | - | | | | |
| | | | TOTALS | 1450 | 1450 | 850 | | | | | | | | 3370 | 2550 | 1220 | TOTALS | | | |

L.C.L. VOLT AMPS: . PHASE A . PHASE B . PHASE C .

TOTAL VOLT AMPS: 10890 PHASE A 4820 PHASE B 4000 PHASE C 2070 (1)

TOTAL AMPS: 30 PHASE A 40 (1) PHASE B 33 PHASE C 17

## NEW PANEL

PANEL NUMBER ITA | VOLTAGE 120/208VAC | PHASE 3 | WIRE 4
SOURCE UPSA | A.I.C. 22,000
PANEL LOCATION PER E401/E402 (1) | BUS AMPERE RATING 225

■ NEMA 1 ■ COPPER BUSS
■ MAIN LUGS ONLY
■ FLUSH MOUNTING

| LCL | MCB | RSTL | CIRCUIT DESCRIPTION | LOAD(VA) A | B | C | BRKR POLE | AMP | CKT | PHASE A B C | CKT | BRKR AMP | POLE | LOAD(VA) A | B | C | CIRCUIT DESCRIPTION | MCB | RSTL | LCL |
|---|---|---|---|---|---|---|---|---|---|---|---|---|---|---|---|---|---|---|---|---|
| | | | IT RACKS | 600 | | | 1 | 20 | 1 | | 2 | 30 | | 600 | | | L6-30R | | | |
| | | | | | 600 | | 1 | 20 | 3 | | 4 | | 2 | | 600 | | | | | |
| | | | | | | 600 | 1 | 20 | 5 | | 6 | 30 | | | | 600 | L6-30R | | | |
| | | | | 600 | | | 1 | 20 | 7 | | 8 | | 2 | 600 | | | | | | |
| | | | | | 600 | | 1 | 20 | 9 | | 10 | 30 | | | 600 | | L6-30R | | | |
| | | | | | | 600 | 1 | 20 | 11 | | 12 | | 2 | | | 600 | | | | |
| | | | | 600 | | | 1 | 20 | 13 | | 14 | 30 | | 600 | | | L6-30R | | | |
| | | | | | 600 | | 1 | 20 | 15 | | 16 | | 2 | | 600 | | | | | |
| | | | | | | 600 | 1 | 20 | 17 | | 18 | 30 | | | | 600 | L6-30R | | | |
| | | | | 600 | | | 1 | 20 | 19 | | 20 | | 2 | 600 | | | | | | |
| | | | | | 600 | | 1 | 20 | 21 | | 22 | 30 | | | 600 | | L6-30R | | | |
| | | | | | | 600 | 1 | 20 | 23 | | 24 | | 2 | | | 600 | | | | |
| | | | | 600 | | | 1 | 20 | 25 | | 26 | 30 | | 600 | | | L6-30R | | | |
| | | | | | 600 | | 1 | 20 | 27 | | 28 | | 2 | | 600 | | | | | |
| | | | | | | 600 | 1 | 20 | 29 | | 30 | 30 | | | | " | SPARE | | | |
| | | | | 600 | | | 1 | 20 | 31 | | 32 | | 2 | " | | | | | | |
| | | | | | 600 | | 1 | 20 | 33 | | 34 | 30 | | | " | | | | | |
| | | | | | | 600 | 1 | 20 | 35 | | 36 | | 2 | | | " | | | | |
| | | | | 600 | | | 1 | 20 | 37 | | 38 | 30 | | " | | | | | | |
| | | | | | 600 | | 1 | 20 | 39 | | 40 | | 2 | | " | | | | | |
| | | | | | | 600 | 1 | 20 | 41 | | 42 | 20 | 1 | | | " | RACK | | | |
| | | | TOTALS | 4200 | 4200 | 4200 | | | | | | | | | | 3000 | 3000 | 3000 | TOTALS | | | |

L.C.L. VOLT AMPS: . PHASE A . PHASE B . PHASE C .

TOTAL VOLT AMPS: 21600 PHASE A 7200 PHASE B 7200 PHASE C 7200

TOTAL AMPS: 60 PHASE A 60 PHASE B 60 PHASE C 60

ISOLATED GROUND PANEL

## NEW PANEL

PANEL NUMBER E | VOLTAGE 120/208VAC | PHASE 3 | WIRE 4
SOURCE DB | A.I.C. 22,000
PANEL LOCATION PER E401/E402 (1) | BUS AMPERE RATING 225

■ NEMA 1 ■ COPPER BUSS
■ MAIN LUGS ONLY
■ FLUSH MOUNTING

| LCL | MCB | RSTL | CIRCUIT DESCRIPTION | LOAD(VA) A | B | C | BRKR POLE | AMP | CKT | PHASE A B C | CKT | BRKR AMP | POLE | LOAD(VA) A | B | C | CIRCUIT DESCRIPTION | MCB | RSTL | LCL |
|---|---|---|---|---|---|---|---|---|---|---|---|---|---|---|---|---|---|---|---|---|
| | 2 | | ROOM 168 RECEPT | 360 | | | 1 | 20 | 1 | | 2 | 20 | 1 | 360 | | | ROOM 158 RECEPT | | 2 | |
| | 2 | | | | 360 | | 1 | 20 | 3 | | 4 | 20 | 1 | | 360 | | | | 2 | |
| | 2 | | | | | 360 | 1 | 20 | 5 | | 6 | 20 | 1 | | | 720 | | | 4 | |
| | 2 | | ROOM 167 RECEPT | 360 | | | 1 | 20 | 7 | | 8 | 20 | 1 | 360 | | | ROOM 159 RECEPT | | 2 | |
| | 2 | | | | 360 | | 1 | 20 | 9 | | 10 | 20 | 1 | | 360 | | | | 2 | |
| | 2 | | | | | 360 | 1 | 20 | 11 | | 12 | 20 | 1 | | | 360 | | | 2 | |
| | 2 | | ROOM 168 RECEPT | 360 | | | 1 | 20 | 13 | | 14 | 20 | 1 | 360 | | | | | 2 | |
| | 2 | | | | 360 | | 1 | 20 | 15 | | 16 | 20 | 1 | | 360 | | | | 2 | |
| | 2 | | | | | 360 | 1 | 20 | 17 | | 18 | 20 | 1 | | | 360 | | | 2 | |
| | 2 | | ROOM 156 RECEPT | 360 | | | 1 | 20 | 19 | | 20 | 20 | 1 | 360 | | | | | 2 | |
| | 2 | | | | 360 | | 1 | 20 | 21 | | 22 | 20 | 1 | | 360 | | ROOM 160 RECEPT | | 2 | |
| | 2 | | | | | 360 | 1 | 20 | 23 | | 24 | 20 | 1 | | | 360 | | | 2 | |
| | 2 | | | 360 | | | 1 | 20 | 25 | | 26 | 20 | 1 | 360 | | | | | 2 | |
| | 2 | | | | 360 | | 1 | 20 | 27 | | 28 | 20 | 1 | | 360 | | | | 2 | |
| | 2 | | | | | 360 | 1 | 20 | 29 | | 30 | 20 | 1 | | | 360 | | | 2 | |
| | 2 | | | 360 | | | 1 | 20 | 31 | | 32 | 20 | 1 | 360 | | | ROOM 164/168 RECEPT | | 2 | |
| | 2 | | | | 360 | | 1 | 20 | 33 | | 34 | 20 | 1 | | 360 | | | | 2 | |
| | 2 | | WAITING RECEPT | | | 360 | 1 | 20 | 35 | | 36 | 20 | 1 | | | 360 | | | 2 | |
| | 2 | | | 360 | | | 1 | 20 | 37 | | 38 | 20 | 1 | 360 | | | ROOM 171 RECEPT | | 2 | |
| | 2 | | | | 360 | | 1 | 20 | 39 | | 40 | 20 | 1 | | 360 | | | | 2 | |
| | 2 | | OPEN OFFICE RECEPT | | | 360 | 1 | 20 | 41 | | 42 | 20 | 1 | | | 360 | | | 2 | |
| | 2 | | | 360 | | | 1 | 20 | 43 | | 44 | 20 | 1 | 360 | | | ROOM 172 RECEPT | | 2 | |
| | 2 | | | | 360 | | 1 | 20 | 45 | | 46 | 20 | 1 | | 360 | | | | 2 | |
| | 2 | | | | | 360 | 1 | 20 | 47 | | 48 | 20 | 1 | | | 360 | | | 2 | |
| | 2 | | | 360 | | | 1 | 20 | 49 | | 50 | 20 | 1 | 360 | | | | | 2 | |
| | 2 | | | | 360 | | 1 | 20 | 51 | | 52 | 20 | 1 | | 360 | | | | 2 | |
| | 2 | | | | | 360 | 1 | 20 | 53 | | 54 | 20 | 1 | | | 360 | | | 2 | |
| | 2 | | | 360 | | | 1 | 20 | 55 | | 56 | 20 | 1 | 360 | | | | | 2 | |
| | 2 | | | | " | | 1 | 20 | 59 | | 58 | 20 | 1 | | 360 | | | | 2 | |
| | 2 | | SPARE | | | " | 1 | 20 | 61 | | 60 | 20 | 1 | | | 360 | | | 2 | |
| | 2 | | | " | | | 1 | 20 | 63 | | 62 | 20 | 1 | 360 | | | | | 2 | |
| | 2 | | | | " | | 1 | 20 | 65 | | 64 | 20 | 1 | | 360 | | | | 2 | |
| | 2 | | VENDING MACHINE | 500 | | | 1 | 20 | 67 | | 66 | 20 | 1 | | | 360 | | | 2 | |
| | 2 | | VENDING MACHINE | | 500 | | 1 | 20 | 69 | | 68 | 20 | 1 | 360 | | | | | 2 | |
| | 2 | | VENDING MACHINE | | | 500 | 1 | 20 | 71 | | 70 | 20 | 1 | | 360 | | | | 2 | |
| | | | | | | | | | | | 72 | 20 | 1 | | | | | | | |
| | | | TOTALS | 4100 | 4100 | 3740 | | | | | | | | 4320 | 4320 | 4680 | TOTALS | | | |

L.C.L. VOLT AMPS: . PHASE A . PHASE B . PHASE C .

TOTAL VOLT AMPS: 25260 PHASE A 8420 PHASE B 8420 PHASE C 8420

TOTAL AMPS: 66 PHASE A . PHASE B . PHASE C .

## NEW PANEL

PANEL NUMBER D | VOLTAGE 120/208VAC | PHASE 3 | WIRE 4
SOURCE DB | A.I.C. 22,000
PANEL LOCATION PER E401/E402 (1) | BUS AMPERE RATING 225

■ NEMA 1 ■ COPPER BUSS
■ MAIN LUGS ONLY
■ FLUSH MOUNTING

| LCL | MCB | RSTL | CIRCUIT DESCRIPTION | LOAD(VA) A | B | C | BRKR POLE | AMP | CKT | PHASE A B C | CKT | BRKR AMP | POLE | LOAD(VA) A | B | C | CIRCUIT DESCRIPTION | MCB | RSTL | LCL |
|---|---|---|---|---|---|---|---|---|---|---|---|---|---|---|---|---|---|---|---|---|
| | 2 | | ROOM 123 RECEPT | 360 | | | 1 | 20 | 1 | | 2 | 20 | 1 | 360 | | | ROOM 128 RECEPT | | 2 | |
| | 2 | | | | 360 | | 1 | 20 | 3 | | 4 | 20 | 1 | | 360 | | | | 2 | |
| | 2 | | | | | 360 | 1 | 20 | 5 | | 6 | 20 | 1 | | | 360 | | | 2 | |
| | 2 | | | 360 | | | 1 | 20 | 7 | | 8 | 20 | 1 | 360 | | | | | 2 | |
| | 6 | | WALKWAY | | 1080 | | 1 | 20 | 9 | | 10 | 20 | 1 | | 360 | | | | 2 | |
| | 2 | | RECEPTION RECEPT | | | 360 | 1 | 20 | 11 | | 12 | 20 | 1 | | | 360 | | | 2 | |
| | 2 | | | 360 | | | 1 | 20 | 13 | | 14 | 20 | 1 | 360 | | | | | 2 | |
| | 2 | | | | 360 | | 1 | 20 | 15 | | 16 | 20 | 1 | | 360 | | | | 2 | |
| | 2 | | SPARE | | | - | 1 | 20 | 17 | | 18 | 20 | 1 | | | 360 | | | 2 | |
| | | | | - | | | 1 | 20 | 19 | | 20 | 20 | 1 | 360 | | | ROOM 129 RECEPT | | 2 | |
| | | | | | - | | 1 | 20 | 21 | | 22 | 20 | 1 | | 360 | | ROOM 129 RECEPT | | 2 | |
| | | | | | | - | 1 | 20 | 23 | | 24 | 20 | 1 | | | 360 | | | 2 | |
| | | | | - | | | 1 | 20 | 25 | | 26 | 20 | 1 | 360 | | | | | 2 | |
| | | | | | - | | 1 | 20 | 27 | | 28 | 20 | 1 | | 360 | | ROOM 127 RECEPT | | 2 | |
| | | | | | | - | 1 | 20 | 29 | | 30 | 20 | 1 | | | 360 | | | 2 | |
| | | | | - | | | 1 | 20 | 31 | | 32 | 20 | 1 | 360 | | | | | 2 | |
| | | | | | - | | 1 | 20 | 33 | | 34 | 20 | 1 | | 360 | | | | 2 | |
| | | | | | | - | 1 | 20 | 35 | | 36 | 20 | 1 | | | - | SPARE | | | |
| | | | | - | | | 1 | 20 | 37 | | 38 | 20 | 1 | - | | | | | | |
| | | | | | - | | 1 | 20 | 39 | | 40 | 20 | 1 | | - | | | | | |
| | | | | | | - | 1 | 20 | 41 | | 42 | 20 | 1 | | | - | | | | |
| | | | TOTALS | 1080 | 1800 | 720 | | | | | | | | 2160 | 2160 | 1800 | TOTALS | | | |

L.C.L. VOLT AMPS: . PHASE A . PHASE B . PHASE C .

TOTAL VOLT AMPS: 9720 PHASE A 3240 PHASE B 3960 PHASE C 2520

TOTAL AMPS: 27 PHASE A 27 PHASE B 33 PHASE C 21

## NEW PANEL

PANEL NUMBER ITB | VOLTAGE 120/208VAC | PHASE 3 | WIRE 4
SOURCE UPSA | A.I.C. 22,000
PANEL LOCATION PER E401/E402 (1) | BUS AMPERE RATING 225

■ NEMA 1 ■ COPPER BUSS
■ MAIN LUGS ONLY
■ FLUSH MOUNTING

| LCL | MCB | RSTL | CIRCUIT DESCRIPTION | LOAD(VA) A | B | C | BRKR POLE | AMP | CKT | PHASE A B C | CKT | BRKR AMP | POLE | LOAD(VA) A | B | C | CIRCUIT DESCRIPTION | MCB | RSTL | LCL |
|---|---|---|---|---|---|---|---|---|---|---|---|---|---|---|---|---|---|---|---|---|
| | | | IT RACKS | 600 | | | 1 | 20 | 1 | | 2 | 30 | | 600 | | | L6-30R | | | |
| | | | | | 600 | | 1 | 20 | 3 | | 4 | | 2 | | 600 | | | | | |
| | | | | | | 600 | 1 | 20 | 5 | | 6 | 30 | | | | 600 | L6-30R | | | |
| | | | | 600 | | | 1 | 20 | 7 | | 8 | | 2 | 600 | | | | | | |
| | | | | | 600 | | 1 | 20 | 9 | | 10 | 30 | | | 600 | | L6-30R | | | |
| | | | | | | 600 | 1 | 20 | 11 | | 12 | | 2 | | | 600 | | | | |
| | | | | 600 | | | 1 | 20 | 13 | | 14 | 30 | | 600 | | | L6-30R | | | |
| | | | | | 600 | | 1 | 20 | 15 | | 16 | | 2 | | 600 | | | | | |
| | | | | | | 600 | 1 | 20 | 17 | | 18 | 30 | | | | 600 | L6-30R | | | |
| | | | | 600 | | | 1 | 20 | 19 | | 20 | | 2 | 600 | | | | | | |
| | | | | | 600 | | 1 | 20 | 21 | | 22 | 30 | | | 600 | | L6-30R | | | |
| | | | | | | 600 | 1 | 20 | 23 | | 24 | | 2 | | | 600 | | | | |
| | | | | 600 | | | 1 | 20 | 25 | | 26 | 30 | | 600 | | | L6-30R | | | |
| | | | | | 600 | | 1 | 20 | 27 | | 28 | | 2 | | 600 | | | | | |
| | | | | | | 600 | 1 | 20 | 29 | | 30 | 30 | | | | " | SPARE | | | |
| | | | | 600 | | | 1 | 20 | 31 | | 32 | | 2 | " | | | | | | |
| | | | | | 600 | | 1 | 20 | 33 | | 34 | 30 | | | " | | | | | |
| | | | | | | 600 | 1 | 20 | 35 | | 36 | | 2 | | | " | | | | |
| | | | | 600 | | | 1 | 20 | 37 | | 38 | 30 | | " | | | | | | |
| | | | | | 600 | | 1 | 20 | 39 | | 40 | | 2 | | " | | | | | |
| | | | | | | 600 | 1 | 20 | 41 | | 42 | 20 | 1 | | | " | RACK | | | |
| | | | TOTALS | 4200 | 4200 | 3600 | | | | | | | | | | 1200 | 1200 | 1200 | TOTALS | | | |

L.C.L. VOLT AMPS: . PHASE A . PHASE B . PHASE C .

TOTAL VOLT AMPS: 15600 PHASE A 5400 PHASE B 5400 PHASE C 4800

TOTAL AMPS: 43 PHASE A 45 PHASE B 45 PHASE C 40

ISOLATED GROUND PANEL

## NEW PANEL

PANEL NUMBER C | VOLTAGE 120/208VAC | PHASE 3 | WIRE 4
SOURCE DB | A.I.C. 22,000
PANEL LOCATION PER E401/E402 (1) | BUS AMPERE RATING 225

■ NEMA 1 ■ COPPER BUSS
■ MAIN LUGS ONLY
■ FLUSH MOUNTING

| LCL | MCB | RSTL | CIRCUIT DESCRIPTION | LOAD(VA) A | B | C | BRKR POLE | AMP | CKT | PHASE A B C | CKT | BRKR AMP | POLE | LOAD(VA) A | B | C | CIRCUIT DESCRIPTION | MCB | RSTL | LCL |
|---|---|---|---|---|---|---|---|---|---|---|---|---|---|---|---|---|---|---|---|---|
| | 4 | | ROOM 133 RECEPT | 120 | | | 1 | 20 | 1 | | 2 | 20 | 1 | 360 | | | ROOM 118 RECEPT | | 2 | |
| | 2 | | | | 360 | | 1 | 20 | 3 | | 4 | 20 | 1 | | 360 | | | | 2 | |
| | 2 | | | | | 360 | 1 | 20 | 5 | | 6 | 20 | 1 | | | 360 | ROOM 117 RECEPT | | 2 | |
| | 2 | | | 360 | | | 1 | 20 | 7 | | 8 | 20 | 1 | 360 | | | | | 2 | |
| | 2 | | | | 360 | | 1 | 20 | 9 | | 10 | 20 | 1 | | 360 | | | | 2 | |
| | 2 | | ROOM 135 RECEPT | | | 360 | 1 | 20 | 11 | | 12 | 20 | 1 | | | 360 | ROOM 116 RECEPT | | 2 | |
| | | | SPARE | - | | | 1 | 20 | 13 | | 14 | 20 | 1 | 360 | | | | | 2 | |
| | | | | | - | | 1 | 20 | 15 | | 16 | 20 | 1 | | 360 | | | | 2 | |
| | | | | | | - | 1 | 20 | 17 | | 18 | 20 | 1 | | | 360 | ROOM 115 RECEPT | | 2 | |
| | | | | - | | | 1 | 20 | 19 | | 20 | 20 | 1 | 360 | | | | | 2 | |
| | | | | | - | | 1 | 20 | 21 | | 22 | 20 | 1 | | 360 | | | | 2 | |
| | | | | | | - | 1 | 20 | 23 | | 24 | 20 | 1 | | | 360 | ROOM 114 RECEPT | | 2 | |
| | | | | - | | | 1 | 20 | 25 | | 26 | 20 | 1 | 360 | | | | | 2 | |
| | | | | | - | | 1 | 20 | 27 | | 28 | 20 | 1 | | 360 | | | | 2 | |
| | | | | | | - | 1 | 20 | 29 | | 30 | 20 | 1 | | | 360 | ROOM 131 RECEPT | | 2 | |
| | | | | - | | | 1 | 20 | 31 | | 32 | 20 | 1 | 360 | | | | | 2 | |
| | | | | | - | | 1 | 20 | 33 | | 34 | 20 | 1 | | 360 | | | | 2 | |
| | 6 | | CORRIDOR RECEPT | | 1080 | | 1 | 20 | 35 | | 36 | 20 | 1 | | | 360 | | | 2 | |
| | 2 | | ROOM 118 RECEPT | 360 | | | 1 | 20 | 37 | | 38 | 20 | 1 | 360 | | | | | 2 | |
| | 2 | | | | 360 | | 1 | 20 | 39 | | 40 | 20 | 1 | | 360 | | | | 2 | |
| | 2 | | | | | 360 | 1 | 20 | 41 | | 42 | 20 | 1 | | | - | SPARE | | | |
| | | | TOTALS | 840 | 1080 | 2160 | | | | | | | | | | 2520 | 2520 | 2160 | TOTALS | | | |

L.C.L. VOLT AMPS: . PHASE A . PHASE B . PHASE C .

TOTAL VOLT AMPS: 11280 PHASE A 3360 PHASE B 3600 PHASE C 4320

TOTAL AMPS: 31 PHASE A 28 PHASE B 30 PHASE C 36

## NEW PANEL

PANEL NUMBER B | VOLTAGE 120/208VAC | PHASE 3 | WIRE 4
SOURCE DB | A.I.C. 22,000
PANEL LOCATION PER E401/E402 (1) | BUS AMPERE RATING 225

■ NEMA 1 ■ COPPER BUSS
■ MAIN LUGS ONLY
■ FLUSH MOUNTING

| LCL | MCB | RSTL | CIRCUIT DESCRIPTION | LOAD(VA) A | B | C | BRKR POLE | AMP | CKT | PHASE A B C | CKT | BRKR AMP | POLE | LOAD(VA) A | B | C | CIRCUIT DESCRIPTION | MCB | RSTL | LCL |
|---|---|---|---|---|---|---|---|---|---|---|---|---|---|---|---|---|---|---|---|---|
| 1 | | | EXIT LITES | 100 | | | 1 | 20 | 1 | | 2 | 20 | 1 | 1200 | | | ROOM 119 TO 123 | | 13 | |
| | | 10 | WALKWAY 130 | | 500 | | 1 | 20 | 3 | | 4 | 20 | 1 | | 1100 | | ROOM 140 TO 145 | | 18 | |
| | | 9 | ROO

TIME: 3:45 pm DATE: 14 March 2025 PATHNAME: G:\21\375\EL\Sheets DRAWING FILENAME: 21-375E300A DRAFTER: CM03

## ARP NLT 8FCR w/ 2-POLE SCENARIO

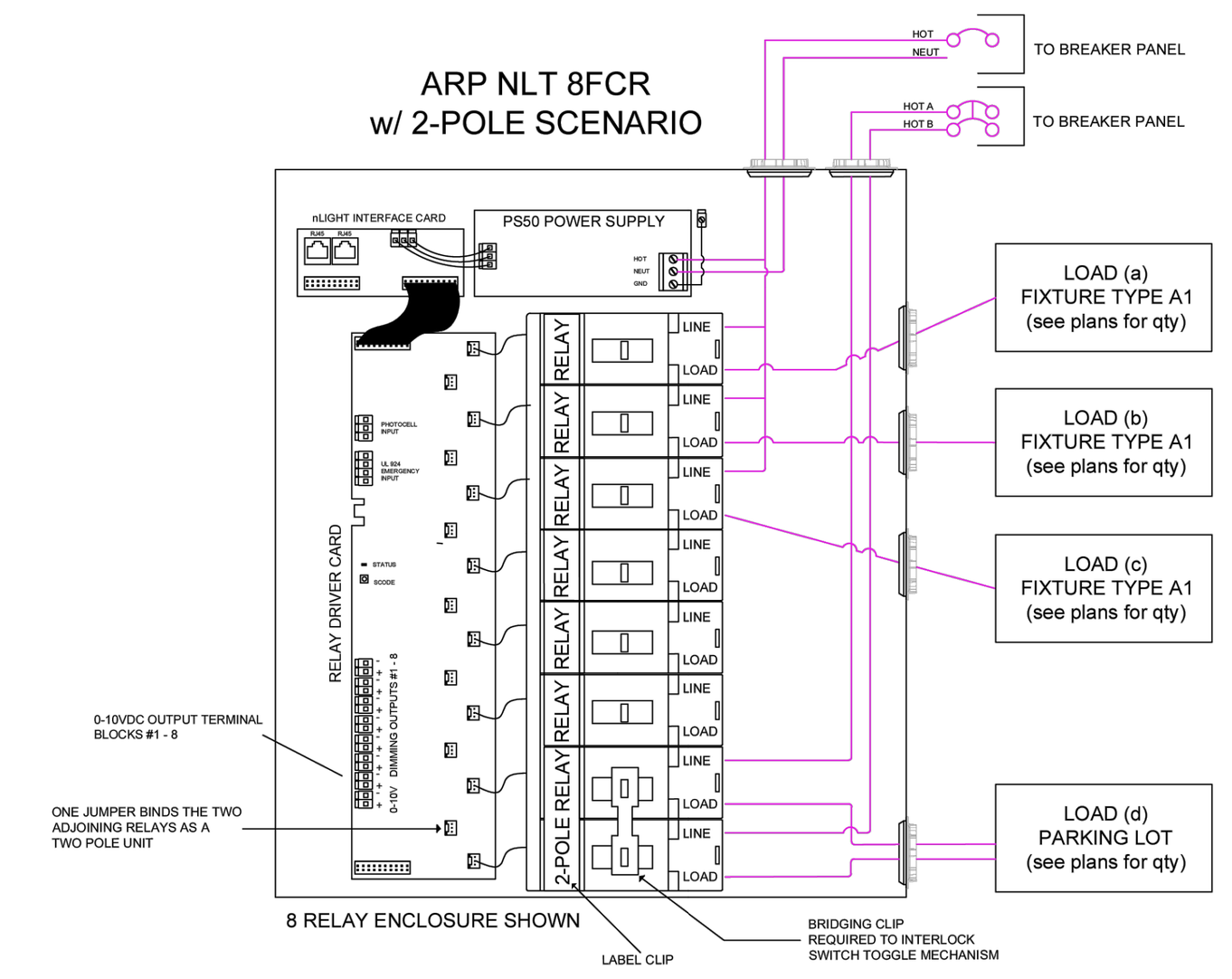


## ARP NLT 8FCR w/ 3-POLE SCENARIO

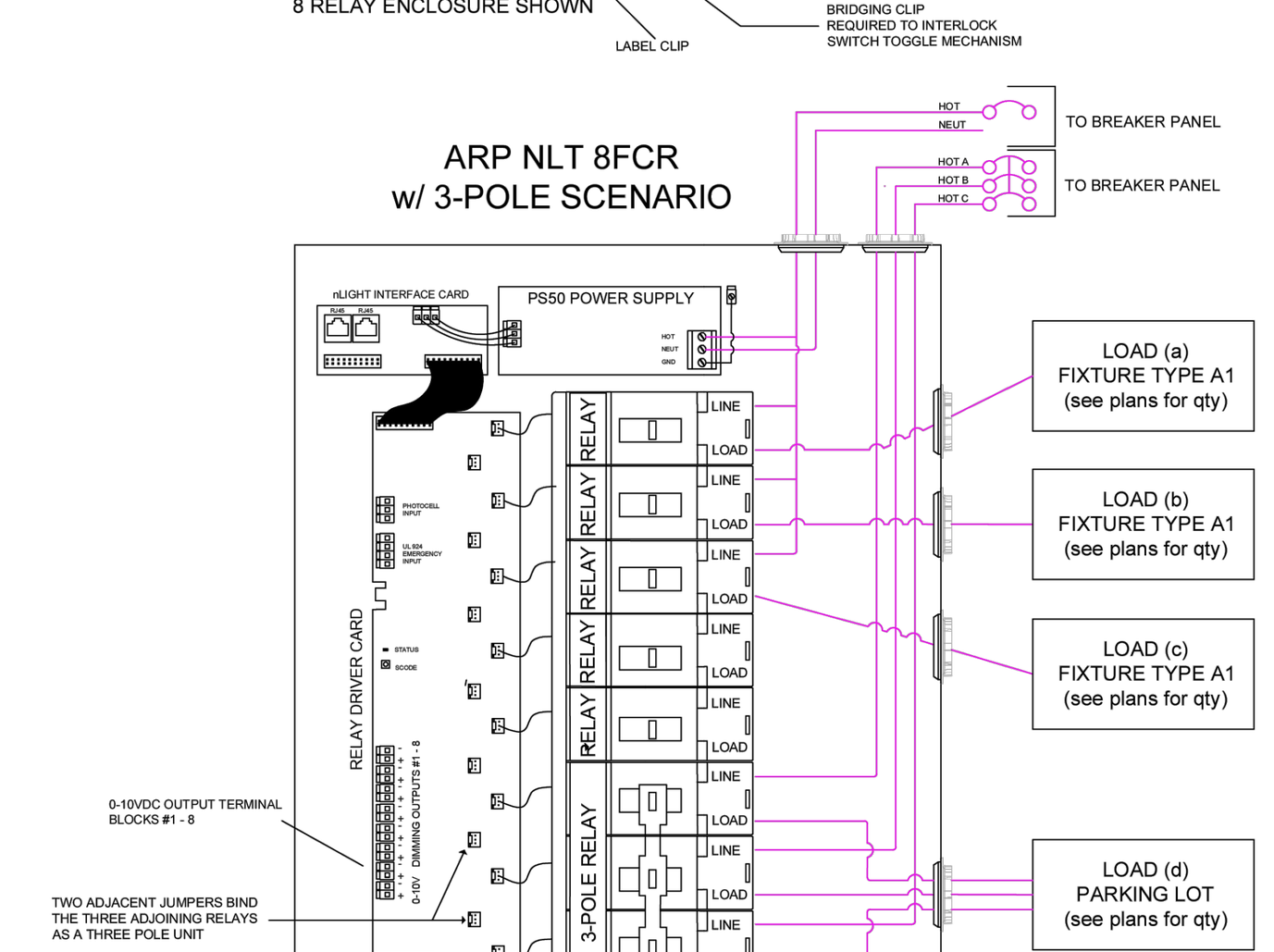




Catalog Number: Date: Project:

### OVERVIEW

The nLight Relay Panel family delivers cost-effective 0-10V dimming and switching for your building design needs. The panel communicates with an nLight network and supports up to 128 digital devices per nLight control zone. Offering a full range of panel sizes, the nLight Relay Panel is ideal for spaces that require full circuit control, with the optional flexibility of configuring single pole relays into a two or three-pole relays in the field.

Also included on each panel is a programmable input that can be connected to a photocell, for example, and a separate dry contact "alarm" input that overrides all relays until the contact is released.

### nLIGHT OPERATION

The nLight Relay Panel is nLight-enabled, meaning it has the ability to communicate over an nLight network. When daisy-chain wired with other nLight-enabled sensors, power packs, or WallPods™ using CAT-5e cabling, an nLight control zone is created. Connecting the panel to an nLight network backbone and nLight® ECLYPSE™ system controller enables time-based control, remote programming and monitoring from SensorView™ software, and BMS integration capabilities.

The digital time clock (DTC) option allows for on-screen configuration and control of connected devices, while introducing scheduling to standalone panel. When connected to nLight backbone and nLight ECLYPSE system controllers the panels relinquish all time clock functionality.

### FEATURES

- Communicates with an nLight network
- Up to 128 digital devices per nLight control zone - each nLight Relay Panel utilizes 9 device addresses per 8 relays/dimming outputs:
  - 1 address per relay/dimming output
  - 1 address for the programmable input
- All relays include local manual override lever
- All relays are individually programmable
- One 0-10V dimming output per relay
- Create and control up to 32 schedules – Normal & Holiday (DTC version)
- Programmable "dry contact/pull high" input (with provided 24VDC source)
  - Input is programmable to preset/profile scene, photosensor signal, wallpod toggle (maintain or momentary)
- Contact input for "alarm" override (requires maintain contact signal)
- All relays communicate with switch/occupancy/photocell channel 1 out of the box (programmable through SensorView)
- FCR type relays capable of being field configured to 2 and 3-pole relay configurations with included hardware:
  - 4/8 Relay Panel: 2x2-Pole and 1x3-Pole Hardware Included
  - 12/16 Relay Panel: 4x2-Pole and 2x3-Pole Hardware Included
  - 24/32/48 Relay Panel: 6x2-Pole and 3x3-Pole Hardware Included
- Supplies auxiliary 24VDC power and nLight network bus power (40mA per RJ45 port)
- Removable back plate for ease of installation
- UL 924 panel listing for Switching Emergency Circuits
- Optional field installed voltage barrier(s) for normal/emergency use, or mixed voltage use
- Remotely Configurable/Upgradeable

**Warranty**
Five-year limited warranty. Complete warranty terms located at:
www.acuitybrands.com/support/customer-support/terms-and-conditions

**Note**: Actual performance may differ as a result of end-user environment and application.

Specifications subject to change without notice.

nLIGHT

*Relay Panel*



cULus LISTED



### SPECIFICATIONS

ENCLOSURE DIMENSIONS
Note: Enclosure is NEMA 1 rated

**8-Relay Enclosure**
- BACKBOX ONLY: 14.25"H x 14.25"W x 4.00"D
- SURFACE MOUNT SCREW COVER (standard offering): 14.41"H x 14.41"W x 4.05"D
- FLUSH MOUNT SCREW COVER: 15.65"H x 15.65"W x 4.05"D (IN-WALL DEPTH: 4.0")

**16 Relay Enclosure**
- BACKBOX ONLY: 22.25"H x 14.25"W x 4.00"D
- SURFACE MOUNT SCREW COVER (standard offering): 22.45"H x 14.45"W x 4.06"D
- FLUSH MOUNT SCREW COVER: 23.65"H x 15.65"W x 4.06"D (IN-WALL DEPTH: 4.0")

**32 Relay Enclosure**
- BACKBOX ONLY: 32.10"H x 20.13"W x 6.00"D
- SURFACE MOUNT HINGED DOOR w/ KEYLOCK: 32.10"H x 20.13"W x 6.68"D

**48 Relay Enclosure**
- BACKBOX ONLY: 40.10"H x 20.13"W x 6.00"D
- SURFACE MOUNT HINGED DOOR w/ KEYLOCK: 40.10"H x 20.13"W x 6.68"D

**Patent**
- 10,129,950
- 9,691,578
- 9,368,306

RELAYS
**"FCR" Type Relays - Field Configurable for 2-Pole and 3-Pole Relays**
- Magnetic/Standard Ballast:
  - 40A @ 120-347VAC (Single-pole)
  - 40A @ 480VAC (Multi-pole)
- Electronic Ballast:
  - 16A @ 120-347VAC
- Tungsten:
  - 20A @ 120-277VAC
- Horsepower Ratings:
  - 2HP @ 120VAC
  - 3HP @ 240-277VAC
- DC:
  - 20A @ 48VDC
- SCCR:
  - 65kA @ 277/480VAC with: Screw Cover (SC) option for 8 & 16 relay enclosure; Hinge Locking (HLK) option for 32 & 48 relay enclosure
  - 14kA @ 277/480VAC with: Hinge Locking (HLK) option for 8 & 16 relay enclosure

**"SPR" Type Relays**
- Magnetic/Standard Ballast:
  - 20A @ 120-277VAC
- Electronic Ballast:
  - 16A @ 120-277VAC
- Tungsten:
  - 5000W @ 250VAC
- Horsepower Ratings:
  - 2HP @ 120VAC
- DC:
  - 20A @ 48VDC
- SCCR:
  - 5kA @ 277VAC

NLIGHT ADDRESSES PER PANEL
- (9) ARP04/08
  - (8) Relays/Dimming Outputs
  - (1) Programmable Input
- (18) ARP12/16
  - (16) Relays/Dimming Outputs
  - (2) Programmable Inputs
- (36) ARP24/32
  - (32) Relays/Dimming Outputs
  - (4) Programmable Inputs
- (54) ARP48
  - (48) Relays/Dimming Outputs
  - (6) Programmable Inputs

INPUTS (1 PER 8 RELAYS)
- (1) Programmable Input for contact closure or photosensor signal (see photosensor accessories above)
- (1) Override input (requires maintained signal)
- 24VDC/200mA auxiliary power available (per 8 relays)
- Connectors accept 16 to 24 AWG wire

OUTPUTS
- 0-10V Capable of Class 1 or Class 2 Wiring
- 100mA Sink Per Dimming Output
- Note:
  - Low trim default 1V, adjustable down to 0.7V
  - High trim default 10V, 10V max
  - Off mode: < 0.7V
- Connectors accept 16 to 24 AWG wire

POWER SUPPLY INPUTS
- 120-277VAC
- 347VAC Option
- 50/60 Hz
- Max 0.5 Amps for 8/16 relay enclosure
- Max 1.0 Amp for 32/48 relay enclosure

PROGRAMMING
- Via SensorView Software

ENVIRONMENT
- Ambient, 8 & 16 relay enclosure: 32-122F (0-50C)
- Ambient, 32 & 48 relay enclosure: 32-113F (0-45C)
- Relative Humidity: 90% non-condensing

STANDARDS
- UL and cUL 916 listed
- UL 924 listed (for emergency circuit use)
- UL 2043 (Plenum) Rated for Surface Mount Screw cover "SC SM" option (8 & 16 relay enclosure only)

BUS CONNECTOR
- (2) RJ45 connectors
- 40mA Bus Power per RJ45 (80mA total)



ORDERING INFORMATION

**nLight RELAY PANEL** Example: ARP INTENC08 NLT 8FCR MVOLT SC SM

| Panel Size | | Relay Quantity | | | | | |
|---|---|---|---|---|---|---|---|
| ARP INTENC08 NLT | 8-Relay Enclosure | 4SPR[1] | 4-Single Pole Relays | 32SPR[3] | 32-Single Pole Relays | 16FCR[2] | 16-Field Configurable Relays |
| ARP INTENC16 NLT | 16-Relay Enclosure | 8SPR[1] | 8-Single Pole Relays | 48SPR[4] | 48-Single Pole Relays | 24FCR[3] | 24-Field Configurable Relays |
| ARP INTENC32 NLT | 32-Relay Enclosure | 12SPR[2] | 12-Single Pole Relays | 4FCR[1] | 4-Field Configurable Relays | 32FCR[3] | 32-Field Configurable Relays |
| ARP INTENC48 NLT | 48-Relay Enclosure | 16SPR[2] | 16-Single Pole Relays | 8FCR[1] | 8-Field Configurable Relays | 48FCR[4] | 48-Field Configurable Relays |
| | | 24SPR[3] | 24-Single Pole Relays | 12FCR[2] | 12-Field Configurable Relays | | |

| Operating Voltage | | Voltage Barrier | | Door Type | | Mounting | | Clock Option | |
|---|---|---|---|---|---|---|---|---|---|
| MVOLT | 120-277VAC | [blank] | No barriers | SC | Screw Cover | SM[7] | Surface Mount | [blank] | No Clock |
| CNDV[5] | 120-277, 347VAC | 1VB | 1 Voltage Barrier | HLK[7] | Hinge Locking | FM | Flush Mount | DTC | Digital Time Clock |
| | | 2VB | 2 Voltage Barriers | | | | | | |
| | | 3VB[6] | 3 Voltage Barriers | | | | | | |
| | | 4VB[6] | 4 Voltage Barriers | | | | | | |

NOTE: If desired, panel enclosure and interior components can be ordered separately (typically for panel enclosure rough-in prior to final wiring and system programming). Contact your Acuity representative for ordering tree information.

1. Only available in 8-Relay Enclosure.
2. Only available in 16-Relay Enclosure.
3. Only available in 32-Relay Enclosure.
4. Only available in 48-Relay Enclosure.
5. Only available with xFCR Relay Option.
6. Only available in 32 or 48-Relay Enclosure Options.
7. 32/48 Enclosures only available in hinge locking surface mount.

**Photosensor Accessories:** *Order as separate catalog number.*

| Series | Description | Recommended Application |
|---|---|---|
| ARPA PC | Simple switching (at ~1-3fc) with mechanically adjustable slide | Outdoor dusk to dawn, On/Off only |
| ARPA APS OL | Analog sensor (0-100FC) with switching/dimming thresholds remotely adjustable (via SensorView) | Outdoor dusk to dawn lighting, On/Off or On/Off/Dimming (where necessary) |
| PCELL 3WI ZT | Analog sensor (0-100FC) with switching/dimming thresholds remotely adjustable (via SensorView) | Indoor On/Off or On/Off/Dimming Applications |

NOTE: For additional photosensor information, see spec sheet: PCELL Spec Sheet.

**Additional Accessories:** *Order as separate catalog number.*

| Series | Description |
|---|---|
| ARP FCR CONFIG HARDWARE BAG | Extra set of hardware to create 2 and 3-pole relays in the field (2x 2-pole relays, 1x 3-pole relay) |
| ARP BARRIER REPLACEMENT KIT | Additional voltage barrier for 4/8/12/16 relay panels |
| ARP32-48 VOLTAGE BARRIER | Additional voltage barrier for 24/32/48 relay panels |



### WIRING - SINGLE-POLE

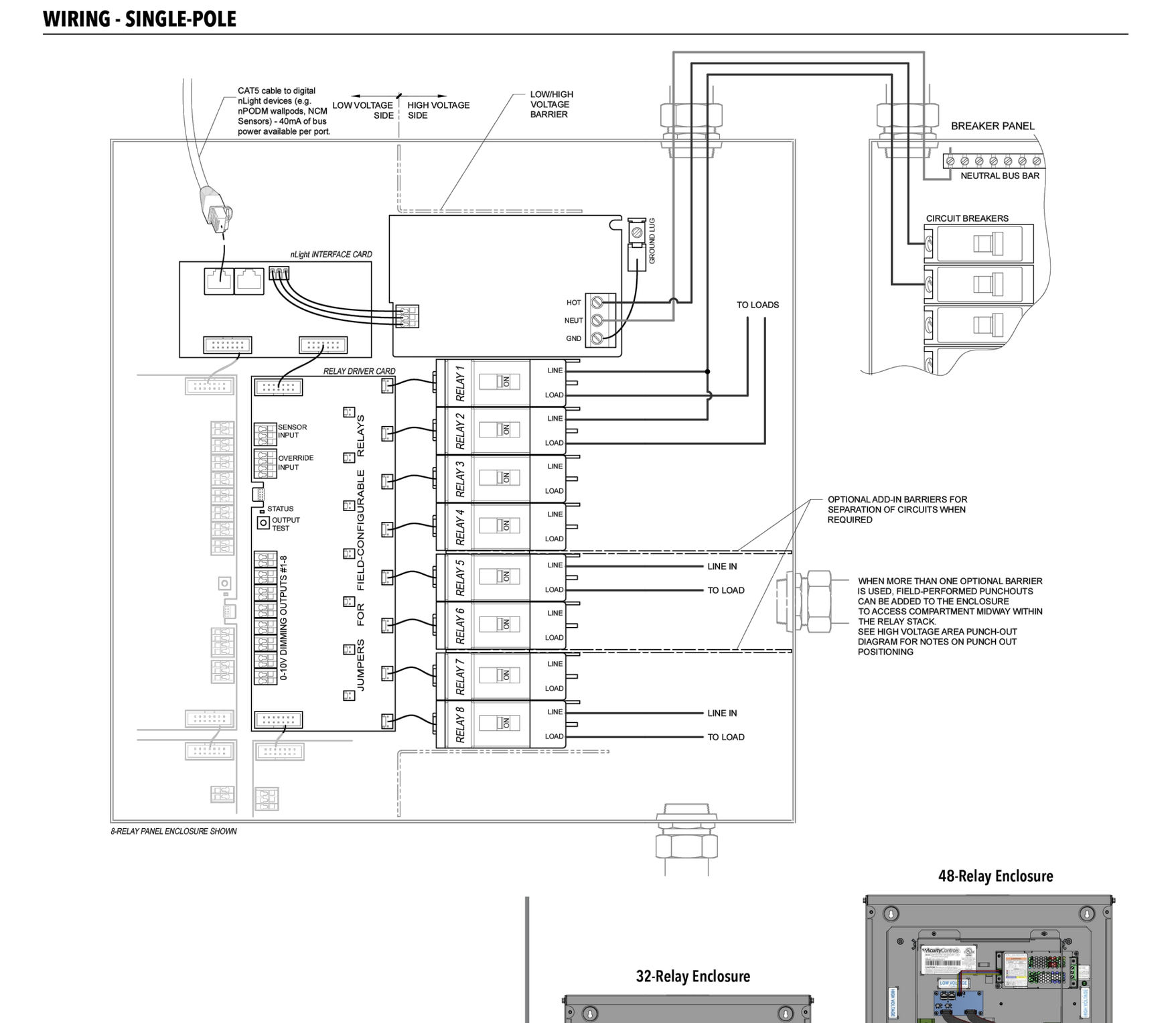


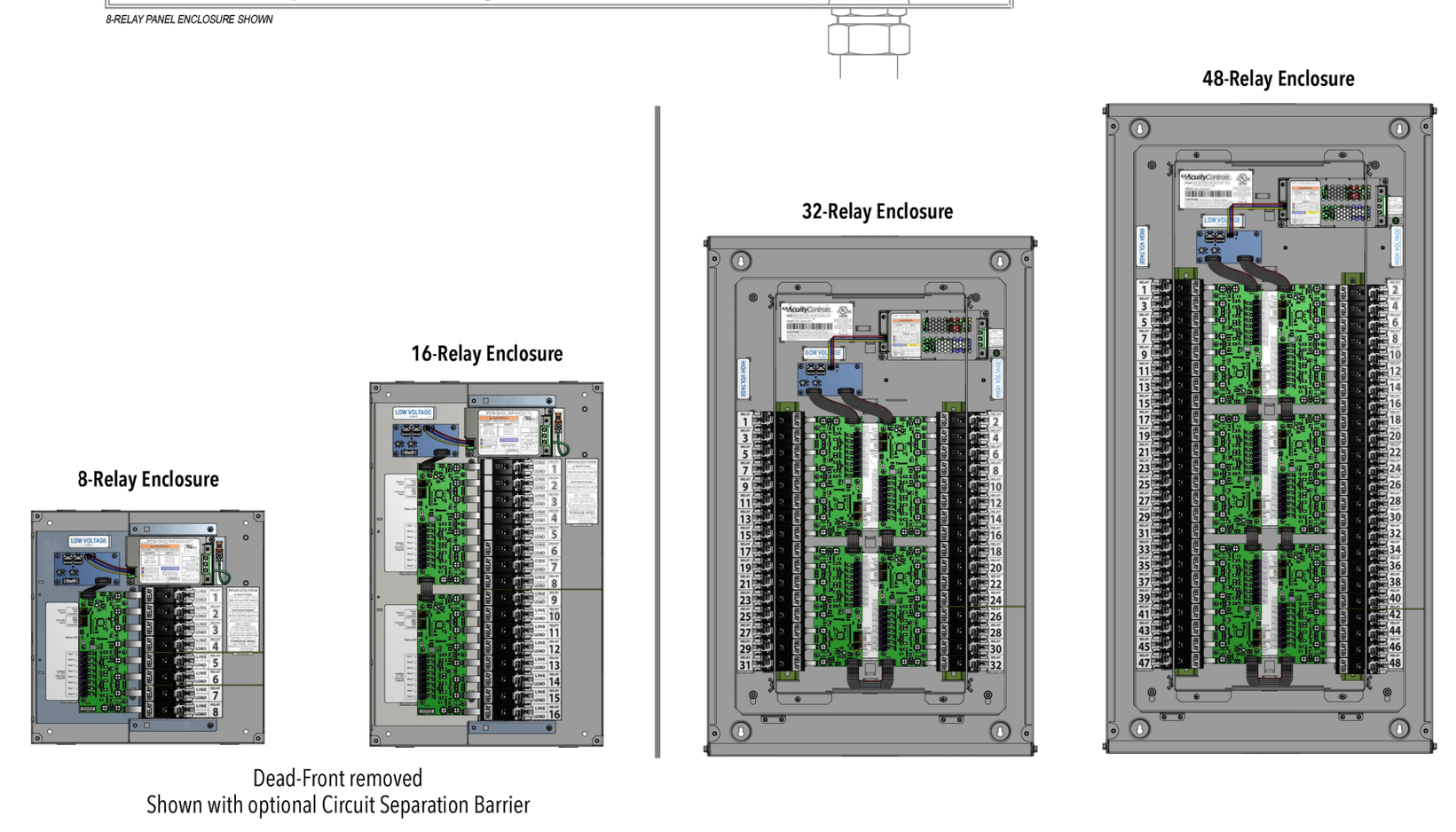


Dead-Front removed
Shown with optional Circuit Separation Barrier



## ARP RELAY PANEL CUT SHEETS

SCALE: NONE 1 - E300A

CONTRACTOR TO CONNECT AT LIGHTING CONTROL PANEL - ARP IN ELECTRICAL ROOM TO THREE N.O./N.C CONTACTS TO MECHANICAL SYSTEM CONTROLS (BMS) & PROGRAM PER CAMPUS M&O REQUIREMENTS. CONTACTS FROM 3/4"C - 6#12 & 1#12 GROUND FROM MECHANICAL BMS PANEL TO ARP.

## LIGHTING FIXTURE SCHEDULE (OFFICE BUILDING)

| TAG | SYMBOL | WATT | DESCRIPTION | LAMP - TYPE AND QUANTITY | MOUNTING | MANUFACTURER AND MODEL NUMBER | REMARKS |
|---|---|---|---|---|---|---|---|
| F1 | | 41 | 2' X 4' LAY-IN | LED | RECESSED | LITHONIA # ENVEX2X4 - HRG- 80CRI 35K DARK EZT MVOLT CL80 - 40L-ADP-MVOLT-EZB-LP835-N80 | - |
| F2 | | 36 | 2' X 2' LAY-IN | LED | RECESSED | LITHONIA # ENV X2X2 HRG 80CRI 35K DARK EZT MVOLT CL80 | - |
| F2N | | 36 | 2' X 2' LAY IN WITH OCCUPANCY SENSOR | LED | RECESSED | LITHONIA # ENVX 2X2 HRG 80CRI 35K DARK EZT MVOLT CL80 NESPDT7 | - |
| F2S | | 36 | 2' X 2' LAY IN WITH OCCUPANCY SENSOR | LED | RECESSED | LITHONIA # ENVX 2X2 HRGC 80CRI 35K DARK EZT MVOLT CL80 NESPDT7 | |
| F3 | | 20 | 6" APERTURE - LED DOWNLIGHT | LED | RECESSED | LITHONIA #EVO 6L 20K/30 6AR MVOLT LS EZ1 NLT-TRW | - |
| F4 | | 20 | 6" APERTURE - LED WALLWASH | LED | RECESSED | LITHONIA EVO 6LW 20K/25 6AR LSS MVOLT EZ1 NLT TRW | - |
| F5 | | 34 | 2' X 4' LAY-IN LED UTILITY FIXTURE WITH ACRYLIC LENS | LED | RECESSED | LITHONIA # EPANL 2X4 80CRI 3000LM 35K MIN1nLIGHT MVOLT | - |
| F6 | | 34 | 1' X 4' SURFACE MOUNTED LED W/ PRISMATIC LENS | LED | RECESSED | LITHONIA # EPANL 1X4 80CRI 3000LM 35K MIN1nLIGHT MVOLT | WITH SURFACE MOUNT KIT |
| F7 | | 1/2W / FT | 36" UNDER-COUNTER SURFACE MOUNTED LED COMPACT FIXTURE | LED | SURFACE | KELVIX - UC32 - 3040 010 120V/277 WH - (40" OR 22") | ELECTRONIC 0-10V DIMMING |
| F8 | | 39 | 1' x 4' SURFACE MOUNTED LED EXTERIOR | LED | SURFACE | LITHONIA TLX4-40L-RW-A19-EZ1-LP835 | |
| F9 | | 25 | 4' LED | LED | PENDANT 9'-0" AFF | LITHONIA CLX - L48 - 4000LM HEF WDL WD MVOLT GZ1 35K 80CRI WH | - |
| F10 | | 34 | CHAIN / PENDANT MTD LED DOWN LIGHT | LED | PENDANT | MARK FSM4L - BW - 875LF FT AS NOTED 80CRI 35K 1C 600CLMF W11 MVOLT WHT XF1 | - |
| F11 | | 2 | EXIT SIGN EDGE-LIT W/ 6" HIGH LETTERS | LED | PENDANT | LITHONIA # LRP-1-W-GC-120/277 EL-N (DOUBLE FACE WHERE NOTED) | ARROW AS REQUIRED PER PATH OF EGRESS, (WITH TWO SOURCES, NORMAL & EMERGENCY) |
| F17 | | 84 | SLOT4 (4") PENDANT 12'-0" | LED | PENDANT | MARK S4PD - LLP - 12FT - 80CRI 35K 1000 LMF DARK 120 WWTT NLIGHT SCEP F1A/72A | - |
| F20 | | 26W/FT | SURFACE MOUNTED COVE LIGHT FOR PUBLIC TOILETS - SEEM 4 | LED | SURFACE | FOCAL POINT FSM4LS-AF-FL-625LF-35K-1C-UNV-L11-NLT1-SM-TS-LENGTH PER PLANS | - |
| F21 | | 39 | EXTERIOR 1' x 4' | LED | SURFACE | LITHONIA TLX4 40L FW A19 EZ1 | |
| OD | | 25W | 15" SQUARE OUTDOOR | LED | SURFACE | KENALL MS 15 CL - PP - MW - 25L35K - 120 - | |
| OT | | 55W | POLE LIGHT 14' | LED | POLE | CYCLONE - CLE17T4D - NL T3 - P40 - 40K - MVOLT - 10KV - PT - SD - BK - SM - MG | |

## CONTROL SCHEDULE

- **BG1** — BG1, NBRG 8 KIT, nLight Bridge, Kit
- **BG2** — BG2, NBRG 8 KIT, nLight Bridge, Kit
- **BG3** — BG3, NBRG 8 KIT, nLight Bridge, Kit
- **BG4** — BG4, NBRG 8 KIT, nLight Bridge, Kit
- **BG5** — BG5, NBRG 8 KIT, nLight Bridge, Kit
- **BG6** — BG6, NBRG 8 KIT, nLight Bridge, Kit
- **BG7** — BG7, NBRG 8 KIT, nLight Bridge, Kit
- **BG8** — BG8, NBRG 8 KIT, nLight Bridge, Kit
- **BG9** — BG9, NBRG 8 KIT, nLight Bridge, Kit
- **DE1** — DE1, NPP16 D ER EFP, Power/Relay Pack, Occupancy Controlled Dimming, UL924 Emergency Operation, External Fault Protection.
- **DP1** — DP1, NPP16 D EFP, Power/Relay Pack, Occupancy Controlled Dimming, External Fault Protection.
- **OS1** — OS1, NCM PDT 9, Low Voltage Ceiling Mount Sensor, Passive Dual Technology, Small Motion / Standard Range 360° Lens
- **OS2** — OS2, NCM PDT 10, Low Voltage Ceiling Mount Sensor, Passive Dual Technology, Large Motion / Extended Range 360° Lens
- **OS3** — OS3, NCM 9, Low Voltage Ceiling Mount Sensor, Small Motion / Standard Range 360° lens
- **OS4** — OS4, NCM 10, Low Voltage Ceiling Mount Sensor, Large Motion / Extended Range 360° lens
- **PC1** — PC1, NCM ADCX, Low Voltage Ceiling Mount Sensor, Photocontrol w/ Auto Dimming; no wires
- **PO1** — PO1, NCM 9 ADCX, Low Voltage Ceiling Mount Sensor, Small Motion / Standard Range 360° Lens, Photocontrol w/ Auto Dimming No Wires
- **PO2** — PO2, NCM 10 ADCX, Low Voltage Ceiling Mount Sensor, Large Motion / Extended Range 360° Lens, Photocontrol w/ Auto Dimming No Wires
- **SC1** — SC1, NECY MVOLT ADR ENC GFXK, nLight Eclypse, 24 VAC
- **SO1** — SO1, NWSX PDT LV DX XX, Wall Switch Sensor, Passive Dual Technology, Low Voltage, Raise/Lower Dimming Without Wires
- **SO2** — SO2, WSX D XX, Wall Switch Sensor, Occupancy Controlled Dimming
- **SW1** — SW1, NPODM DX XX, Low voltage Push-Button Wallpod, Raise/Lower Dimming Without Wires
- **SW2** — SW2, NPODM 2P DX XX, Low Voltage Push-Button Wallpod, 2-Pole, Raise/Lower Dimming Without Wires
- **SW4** — SW4, NPODM 4P DX XX, Low Voltage Push-Button Wallpod, 4-Pole, Raise/Lower Dimming Without Wires
- **PP1** — NPP116, WPP16, Power Pack For 120VAC and 277VAC Switching.
- **$OS** — OCCUPANCY SENSOR SENSOR SWITCH - LINE VOLTAGE DUAL LEVEL WSD PDT 2P.
- **20PL** — PLUG LOAD NLIGHT 20PL OCCUPANCY SENSOR CAT 5 CONTROLLED SWITCH FOR PLUG LOAD

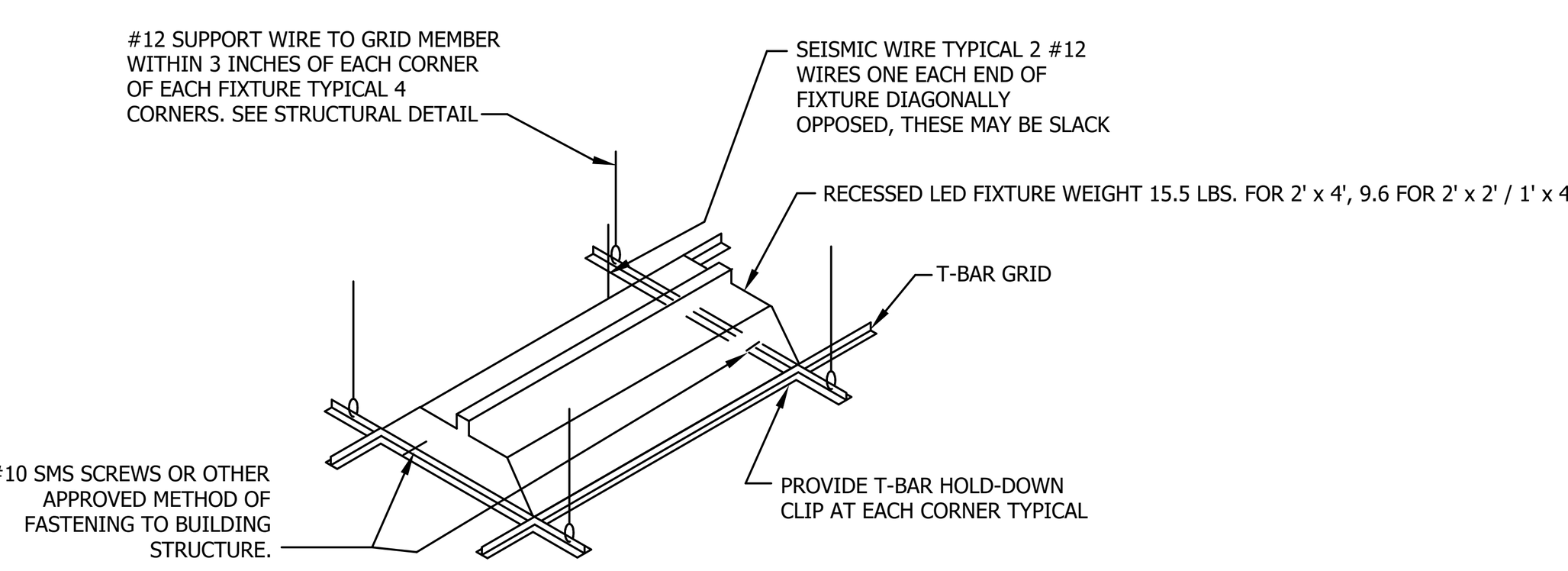


ALL LIGHTING FIXTURES SHALL BE SECURELY ATTACHED TO THE SUSPENDED CEILING SYSTEM. THE ATTACHMENT DEVICE SHALL HAVE A CAPACITY OF 100 PERCENT OF THE LIGHT FIXTURE WEIGHT ACTING IN ANY DIRECTION.

WHEN INTERMEDIATE SYSTEMS ARE USED, #12 GAGE HANGERS SHALL BE ATTACHED TO THE GRID MEMBERS WITHIN 3 INCHES OF EACH CORNER OF EACH FIXTURE. TANDEM FIXTURES MAY UTILIZE COMM0N WIRES.

WHERE HEAVY DUTY SYSTEMS ARE USED, SUPPLEMENTAL HANGERS ARE NOT REQUIRED IF A 48 INCH MODULAR HANGER PATTERN IS FOLLOWED. WHEN CROSS RUNNERS ARE USED WITHOUT SUPPLEMENTAL HANGERS TO SUPPORT LIGHTING FIXTURES, THESE CROSS RUNNERS MUST PROVIDE THE SAME CARRYING CAPACITY AS THE MAIN RUNNER.

LIGHTING FIXTURES WEIGHING 56 POUNDS OR MORE SHALL BE SUPPORTED DIRECTLY FROM THE STRUCTURE ABOVE BY APPROVED HANGERS.

PENDANT MOUNTED LIGHTING FIXTURES SHALL BE SUPPORTED DIRECTLY FROM THE STRUCTURE ABOVE USING 9 GAGE WIRE OR APPROVED ALTERNATE.

NOTE: ALL ELECTRICAL EQUIPMENT, CONDUIT, FIXTURES, ETC. SHALL BE SECURELY FASTENED TO THE BUILDING STRUCTURE AS PER CITY ORDINANCES.

### FIXTURE SCHEDULE NOTES:

1. FIXTURES TYPE IN CONTACT WITH INSULATION SHALL HAVE U.L. LISTED THERMAL BARRIER.
2. CONTRACTOR SHALL VERIFY THE TYPE OF CEILING BEFORE ORDERING NEW FIXTURES. CONTRACTOR IS FULLY RESPONSIBLE TO PROVIDE ALL MOUNTING BRACKETS TO FIT CEILING CONDITIONS AT NO EXTRA CHARGE TO THE OWNER.
3. REFER TO ARCHITECTURAL REFLECTED CEILING PLAN FOR EXACT LOCATION OF LIGHTING FIXTURES.
4. SEE ARCHITECTURAL PLANS FOR EXACT DIMENSIONS, CEILING CONFIGURATION AND LIGHTING PLACEMENT.
5. XX — FIXTURE TYPE; XX — QUANTITY

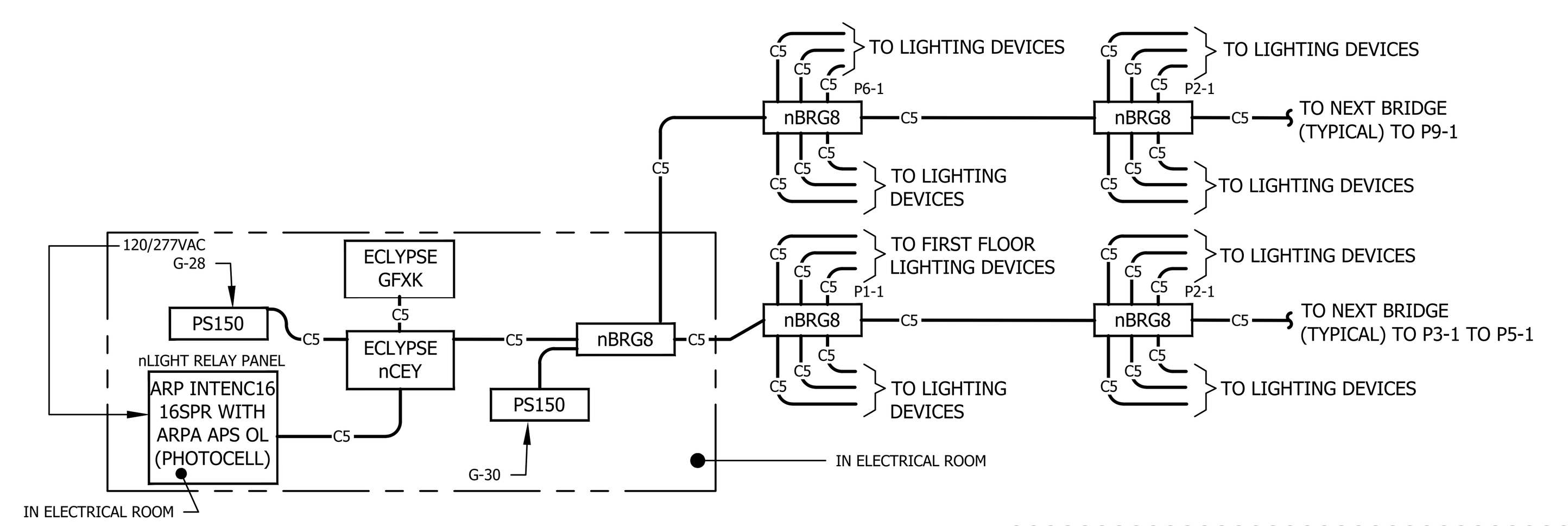


## nLIGHT GATEWAY/BRIDGE SCHEMATIC (PROVIDE ALL EQUIPMENT, PROGRAMMING & CONNECTIONS) 1


Copyright Lucci and Associates Consulting Electrical Engineers. Deviations from this drawing will not be made without their expressed written permission.


DIVISION OF THE STATE ARCHITECT


AMADOR WHITTLE ARCHITECTS, INC.
28328 AGOURA ROAD, SUITE 203
AGOURA HILLS, CA 91301
(805) 530-3938 , (818) 874-0071


Ventura County Community College

PROJECT TITLE
**MOORPARK COLLEGE ADMINISTRATION BUILDING RENOVATION**

7075 CAMPUS ROAD
MOORPARK, CA 91320

CONSULTANT

LUCCI & ASSOCIATES INC.
CONSULTING ELECTRICAL ENGINEERS
3251 CORTE MALPASO, #511
CAMARILLO, CA 93012-8094
(805) 389-6520 FAX (805) 389-6519



**LUCCI & ASSOCIATES, INC.** reserve their commonlaw copyright and other property rights in these plans. These plans and drawings are not to be reproduced, changed, or copied in any form or manner whatsoever without first obtaining the expressed written permission and consent of LUCCI & ASSOC. INC nor are they to be assigned to any third party without obtaining said written permission and consent.


STAMPS/SEALS
REGISTERED PROFESSIONAL ENGINEER KENNETH W. LUCCI No. E 8340 Exp. 09/30/2026 ELECTRICAL STATE OF CALIFORNIA

12/08/2023 - DSA RESUBMITTAL

1 ADDENDUM 1, 03-13-2025

SHEET TITLE:
**LIGHTING FIXTURE SCHEDULE**

PROJECT NO.: 21-MPC-040 PROJECT ARCH:
DRAWN: LK/DS CHECKED:
SHEET NUMBER:
**E300A**
6/04/2024 UPDATE
DATE: 12/08/23 SHEET: ____ OF ____

IF THIS SHEET IS NOT 30" X 42", IT IS NOT FULL SIZE, SCALE ACCORDINGLY
L.A.I.# 21-375

Drafter:CM03 Paper Size: 12.9 Drawing:G:\21\375\EL\Sheets\21-375E300A.dwg Mar 14, 2025, 3:45pm Attached XREFS: XREF:G:\21\375\EL\Xrefs\21-375TB.dwg

Drafter: CM01: G:\21\375\EL\Sheets\21-375E300A.dwg; DATE: NOV 13, 2023 TIME: 12:29 PM

# AVENUE 30
## Round Tapered Aluminum Post

valmont STRUCTURES

Job Name: _____ Client Name: _____

Job Location - City: _____ State: _____ Created By: _____ Date: _____

Product: AV30ASR -- Quote: _____ Customer Approval: _____ Date: _____

## ANCHORAGE DATA

| STRUCTURAL BASE | | ANCHOR BOLTS* | | | | |
|---|---|---|---|---|---|---|
| BOLT CIRCLE | | | | | | |
| DIA (IN) | ± (IN) | DIA (IN) | THK (IN) | DIA x LENGTH x HOOK (IN) | PROJECTION (IN) | ± (IN) |
| 9.00 | N/A | 16.00 | 0.860 | 0.75 x 17.00 x 3.00 | 3.50 | N/A |

*Four anchor bolts required at 90° apart. Base has eight slots for additional orientation.

**Anchor Base Detail**

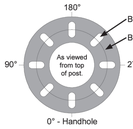


## LOAD AND DIMENSIONAL DATA

| DESIGN INFORMATION | | | | | | POST DIMENSIONS | | | | |
|---|---|---|---|---|---|---|---|---|---|---|
| | 80 MPH w/1.3 GUST[1] | | 90 MPH w/1.3 GUST[1] | | 100 MPH w/1.3 GUST[1] | | | | | |
| NOMINAL MOUNTING HEIGHT | MAX EPA[2] (SQFT) | MAX WEIGHT[3] (LBS) | MAX EPA[2] (SQFT) | MAX WEIGHT[3] (LBS) | MAX EPA[2] (SQFT) | MAX WEIGHT[3] (LBS) | BASE OD (IN) | TOP OD (IN) | WALL THK (IN) | STRUCTURE WEIGHT[3] (LBS) | MODEL NUMBER |
| 10' - 0" | 17.2 | 120 | 13.4 | 120 | 10.8 | 120 | 5.00 | 4.00 | 0.156 | 57 | 100040505JJ |
| 12' - 0" | 14.3 | 120 | 11.0 | 120 | 8.8 | 120 | 5.00 | 4.00 | 0.156 | 62 | 120040505JJ |
| 14' - 0" | 11.5 | 120 | 8.8 | 120 | 6.9 | 120 | 5.00 | 4.00 | 0.156 | 67 | 140040505JJ |
| | 14.1 | 120 | 10.8 | 120 | 8.6 | 120 | 5.00 | 4.00 | 0.188 | 73 | 140040506JJ |
| 16' - 0" | 9.3 | 120 | 7.0 | 120 | 5.5 | 120 | 5.00 | 4.00 | 0.156 | 72 | 160040505JJ |
| | 11.5 | 120 | 8.7 | 120 | 6.9 | 120 | 5.00 | 4.00 | 0.188 | 79 | 160040506JJ |
| 18' - 0" | 7.5 | 120 | 5.5 | 120 | 4.2 | 120 | 5.00 | 4.00 | 0.156 | 77 | 180040505JJ |
| | 9.4 | 120 | 7.0 | 120 | 5.4 | 120 | 5.00 | 4.00 | 0.188 | 85 | 180040506JJ |

1. EPA values are calculated using fastest mile winds.
2. Maximum EPA (Effective Projected Area) and weight values are based on top mounted luminaires and/or brackets having a centroid 3'-0" above and 3'-0" eccentric to the post top at Nominal Mounting Height. Variations from sizes above are available upon inquiry at the factory. Satisfactory performance of posts is dependent upon the post being properly attached to a supporting foundation of adequate design.
3. Structure Weight is a nominal value which includes the post shaft and structural base.

## PRODUCT ORDERING CODES

| DESIGN SERIES | CROSS SECTION | MODEL NUMBER | FIXTURE MOUNTING | COLOR | OPTIONS |
|---|---|---|---|---|---|
| AV30AS | R | | -- | | |
| | Round | 100040505JJ<br>120040505JJ<br>140040505JJ<br>140040506JJ<br>160040505JJ<br>160040506JJ<br>180040505JJ<br>180040506JJ | **Drill Mounting**<br>D1 = 1 Luminaire<br>D2 = 2 @ 180°<br>D3 = 3 @ 120°<br>D4 = 4 @ 90°<br>D5 = 2 @ 90°<br>D6 = 3 @ 90°<br>**Tenon Mounting**<br>P2 = 2.38" OD x 4.00"<br>P3 = 3.50" OD x 6.00"<br>P4 = 4.00" OD x 6.00"<br>P5 = 2.88" OD x 4.00"<br>P7 = 2.38" OD x 5.00"<br>PA = 3.50" OD x 12.00"<br>PQ = 2.38" OD x 12.00"<br>PD = 3.00" OD x 3.00"<br>-- = Plain Top<br>P9 = Other Tenon (Contact Factory) | DWH = White<br>DSS = Sandstone<br>HTG = Hunter Green<br>DNA = Natural Aluminum<br>DCG = Charcoal Gray<br>DMB = Medium Bronze<br>DNB = New Dark Bronze<br>DDB = Dark Bronze<br>DBL = Black<br>DSB = Steel Blue<br>DTG = Dark Green<br>DBR = Red<br>SC = Special Color (Contact Factory) | See Decorative Accessories or Decorative Arms - Aluminum at valmontstructures.com (Please Specify) |




SPC/1083 11/17 valmontstructures.com carries the most current spec information and supersedes these guidelines.



valmont STRUCTURES

AVENUE 30
Round Tapered Aluminum Post

Job Name: _____ Client Name: _____

Job Location - City: _____ State: _____ Created By: _____ Date: _____

Product: AV30ASR -- Quote: _____ Customer Approval: _____ Date: _____


## SPECIFICATIONS




**Post** - The post shaft is spun from seamless 6000 series alloy aluminum.

**Post Top** - A post top plate and tenon can be provided for top mount luminaire and/or bracket. A removable finial is available for posts receiving drilling patterns for side-mount luminaire arm assemblies.

**Structural Base** - The structural base is cast from 356 alloy aluminum and provided with an access door that is 4.25" wide at the top, 9.38" wide at the base, and 8" tall. A grounding provision is provided. The post shaft is inserted and welded into the structural base casting. The completed assembly is heat-treated to a T6 temper.

**Anchor Bolts** - Anchor bolts conform to ASTM F1554 Grade 55 and are provided with two hex nuts and two flat washers. Bolts have an "L" bend on one end and are galvanized a minimum of 12" on the threaded end.

**Finish** - The standard finish for the post assembly and components is polyester powder applied coating in accordance with Valmont Industries' Specifications. Additional finish options available upon request.


VALMONT INDUSTRIES, INC. 28800 ICA STREET, PO BOX 358 - VALLEY, NE 68064 USA 800.825.6668 VALMONTSTRUCTURES.COM


1

# Azalea

cyclone



SEE E130 FOR POLE BASE DETAIL

cyclone

## Azalea CLE17T4D Approval – Specification

Project: _____ Order: _____

Qty: _____ Luminaire: _____ Type: _____

**Ordering Code**

| Model | Lens | Distribution | Performance Package | CCT | Volts | Surge Protector |
|---|---|---|---|---|---|---|
| CLE17T4D | FGC Flat Glass Clear<br>FGF Flat Glass Fluted<br>NL No Lens | T1 Type 1<br>T1A Type 1A<br>T1AHS Type 1A with HS<br>T2 Type 2<br>T2HS Type 2 with HS<br>T2IR Type 2IR<br>T2IRHS Type 2IR with HS<br>T3 Type 3<br>T3HS Type 3 with HS<br>T3IR Type 3IR<br>T3IRHS Type 3IR with HS<br>T4 Type 4<br>T4HS Type 4 with HS<br>T5 Type 5 | P10 (2900lm)<br>P20 (4200lm)<br>P30 (5400lm)<br>P40 (6600lm)<br>P50 (7500lm)<br>P60 (10100lm)<br>P70 (13100lm)<br>P80 (14800lm) | 30K 3000K<br>40K 4000K | MVOLT 120-277VAC<br>HVOLT 347-480VAC | 10KV 10 Kv<br>20KV 20 Kv |

| Reducer | Photocell | Dimming | Color | Texture | Pre Finish |
|---|---|---|---|---|---|
| Fits Ø 4" (10cm) X 3" (7.5cm) long tenon.<br>R2R Reducer Ø 4" (10cm) fit to 2 7/8" (7cm) Ø x 3" (7.5cm) long tenon<br>R3R Reducer Ø 4" (10cm) fit to 3" (7.5cm) Ø x 3" (7.5cm) long tenon | PT Photocell NEMA twist-lock receptacle (ANSI C136.41)<br>PX Shorting cap (MT-PIN receptacle (ANSI C136.41)<br>PTL Long life photocell MT-PIN receptacle (ANSI C136.41)<br>PTDR 7-PIN receptacle (ANSI C136.41) | DIM 0-10 volts dimming<br>PND5098 Program 50% for 6 hours (10PM to 5AM)<br>PND7098 Program 70% for 6 hours (9PM to 5AM)<br>SD Field adjustable 10% increment step-dimming switch<br>Contact factory for shadow controls and ROAM controller logistics SD option. | BK Black RAL9005<br>DG Dark green RAL6012<br>MN Marine blue RAL5013<br>SI Metallic silver RAL9006 (smooth only)<br>BZ Dark bronze RAL8019<br>BG Burgundy RAL9005<br>GR Moss green RAL6005<br>PG Pale grey RAL7040<br>WH White RAL9003<br>BKH Black Holoshpere (smooth only)<br>BZH Dark bronze Holosphere (smooth only)<br>GRH* Green Holosphere (smooth only)<br>GHR* Graphite Holosphere (smooth only)<br>GRY* Grey Holosphere (smooth only)<br>SLH* Silver Holosphere (smooth only)<br>BWH* White Holosphere (smooth only)<br>* Holospheres coated. | TX Textured<br>SM Smooth | MG Marine grade pre-finish |

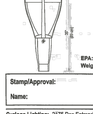


EPA: 1.20 ft²
Weight: 42 lbs (19 kg)

Note: Actual performance may differ as a result of end-user environment and application. Specifications subject to change without notice. Please consult our web site for up-to-date product information and IES files.

Stamp/Approval: _____ Name: _____ Page 2 of 2

Name: _____ Date: _____ Date: _____



© 2019-2021 Acuity Brands Lighting, Inc. All rights reserved.

Rev. 21/10/15

cyclone

## Photometric Data Tables

**Azalea - CLE17T4D-FGC** (Flat Glass Clear)

| Performance Package | Watts | System | Optic | 30K Lumen Output | 30K Efficacy (LM/W) | 30K B | 30K U | 30K G | 40K Lumen Output | 40K Efficacy (LM/W) | 40K B | 40K U | 40K G | LLD @ 25C 20K Hours | 50K Hours | 75K Hours | 100K Hours |
|---|---|---|---|---|---|---|---|---|---|---|---|---|---|---|---|---|---|
| P10 | 22.8 | | T1 | 2481 | 109 | 1 | 0 | 1 | 2605 | 114 | 1 | 0 | 1 | 0.96 | 0.96 | 0.97 | 0.97 |
| | | | T1A | 2430 | 107 | 1 | 0 | 1 | 2554 | 112 | 1 | 0 | 1 | | | | |
| | | | T2 | 2343 | 103 | 1 | 0 | 0 | 2460 | 108 | 1 | 0 | 0 | | | | |
| | | | T2H | 2317 | 102 | 1 | 0 | 1 | 2433 | 107 | 1 | 0 | 1 | | | | |
| | | | T3 | 2320 | 102 | 1 | 0 | 1 | 2436 | 107 | 1 | 0 | 1 | | | | |
| | | | T3H | 2294 | 101 | 1 | 0 | 1 | 2409 | 106 | 1 | 0 | 1 | | | | |
| | | | T4 | 2219 | 97 | 1 | 0 | 1 | 2330 | 102 | 1 | 0 | 1 | | | | |
| | | | T5 | 2424 | 105 | 3 | 0 | 3 | 2524 | 111 | 1 | 0 | 1 | | | | |
| P30 | 30.4 | | T1 | 3847 | 106 | 1 | 0 | 1 | 3724 | 112 | 1 | 0 | 1 | 0.98 | 0.98 | 0.97 | 0.97 |
| | | | T1A | 3477 | 104 | 1 | 0 | 1 | 3651 | 109 | 1 | 0 | 1 | | | | |
| | | | T2 | 3300 | 100 | 1 | 0 | 1 | 3518 | 103 | 1 | 0 | 1 | | | | |
| | | | T2H | 3312 | 99 | 1 | 0 | 1 | 3478 | 104 | 1 | 0 | 1 | | | | |
| | | | T3 | 3317 | 97 | 1 | 0 | 1 | 3483 | 102 | 1 | 0 | 1 | | | | |
| | | | T3H | 3418 | 102 | 1 | 0 | 1 | 3588 | 107 | 1 | 0 | 1 | | | | |
| | | | T4 | 3172 | 95 | 1 | 0 | 1 | 3331 | 100 | 1 | 0 | 1 | | | | |
| | | | T5 | 3618 | 105 | 3 | 0 | 3 | 3666 | 106 | 2 | 0 | 1 | | | | |
| P50 | 43.9 | | T1 | 4573 | 104 | 2 | 0 | 1 | 4804 | 110 | 2 | 0 | 1 | 0.98 | 0.98 | 0.97 | 0.97 |
| | | | T1A | 4494 | 102 | 2 | 0 | 1 | 4708 | 107 | 2 | 0 | 1 | | | | |
| | | | T2 | 4329 | 99 | 1 | 0 | 1 | 4538 | 104 | 1 | 0 | 1 | | | | |
| | | | T2H | 4281 | 97 | 1 | 0 | 1 | 4488 | 102 | 1 | 0 | 1 | | | | |
| | | | T3 | 4277 | 98 | 1 | 0 | 1 | 4481 | 103 | 1 | 0 | 1 | | | | |
| | | | T3H | 4404 | 101 | 1 | 0 | 1 | 4624 | 106 | 1 | 0 | 1 | | | | |
| | | | T4 | 4091 | 93 | 1 | 0 | 1 | 4286 | 98 | 1 | 0 | 1 | | | | |
| | | | T5 | 4432 | 101 | 2 | 0 | 1 | 4664 | 106 | 2 | 0 | 1 | | | | |
| P60 | 55.1 | | T1 | 5866 | 101 | 2 | 0 | 2 | 5842 | 106 | 2 | 0 | 2 | 0.98 | 0.98 | 0.97 | 0.97 |
| | | | T1A | 5453 | 99 | 2 | 0 | 1 | 5729 | 104 | 2 | 0 | 1 | | | | |
| | | | T2 | 5404 | 98 | 2 | 0 | 1 | 5677 | 103 | 2 | 0 | 1 | | | | |
| | | | T2H | 5198 | 94 | 1 | 0 | 1 | 5465 | 99 | 1 | 0 | 1 | | | | |
| | | | T3 | 5201 | 94 | 1 | 0 | 1 | 5481 | 99 | 1 | 0 | 1 | | | | |
| | | | T3H | 5356 | 97 | 1 | 0 | 1 | 5634 | 102 | 1 | 0 | 1 | | | | |
| | | | T4 | 4973 | 90 | 1 | 0 | 1 | 5224 | 95 | 1 | 0 | 1 | | | | |
| | | | T5 | 5382 | 98 | 2 | 0 | 1 | 5659 | 103 | 2 | 0 | 1 | | | | |
| P50 | 63.5 | | T1 | 6260 | 99 | 2 | 0 | 1 | 6585 | 104 | 2 | 0 | 1 | 0.98 | 0.98 | 0.97 | 0.97 |
| | | | T1A | 6220 | 98 | 2 | 0 | 1 | 6551 | 103 | 2 | 0 | 1 | | | | |
| | | | T2 | 5992 | 94 | 1 | 0 | 1 | 6282 | 99 | 1 | 0 | 1 | | | | |
| | | | T2H | 6025 | 93 | 2 | 0 | 1 | 6221 | 98 | 2 | 0 | 1 | | | | |
| | | | T3 | 5992 | 93 | 1 | 0 | 1 | 6329 | 99 | 1 | 0 | 1 | | | | |
| | | | T3H | 6169 | 96 | 2 | 0 | 1 | 6414 | 101 | 2 | 0 | 1 | | | | |
| | | | T4 | 5678 | 89 | 1 | 0 | 1 | 5899 | 93 | 1 | 0 | 1 | | | | |
| | | | T5 | 6139 | 97 | 2 | 0 | 1 | 6457 | 102 | 2 | 0 | 1 | | | | |
| P70 | 76.1 | | T1 | 8473 | 89 | 2 | 0 | 2 | 8897 | 104 | 2 | 0 | 2 | 0.98 | 0.98 | 0.97 | 0.97 |
| | | | T1A | 8304 | 97 | 2 | 0 | 2 | 8719 | 102 | 2 | 0 | 2 | | | | |
| | | | T2 | 8001 | 94 | 1 | 0 | 1 | 8401 | 98 | 1 | 0 | 1 | | | | |
| | | | T2H | 7911 | 93 | 2 | 0 | 1 | 8307 | 97 | 2 | 0 | 1 | | | | |
| | | | T3 | 7921 | 93 | 1 | 0 | 2 | 8317 | 98 | 1 | 0 | 2 | | | | |
| | | | T3H | 8157 | 96 | 2 | 0 | 1 | 8565 | 100 | 2 | 0 | 1 | | | | |
| | | | T4 | 7573 | 89 | 1 | 0 | 1 | 7956 | 93 | 1 | 0 | 1 | | | | |
| | | | T5 | 8155 | 96 | 3 | 0 | 2 | 8564 | 101 | 3 | 0 | 2 | | | | |
| P70 | 110.3 | | T1 | 11452 | 104 | 3 | 0 | 2 | 11982 | 109 | 3 | 0 | 2 | 0.98 | 0.98 | 0.97 | 0.97 |
| | | | T1A | 10812 | 97 | 3 | 0 | 2 | 11351 | 102 | 3 | 0 | 2 | | | | |
| | | | T2 | 10419 | 94 | 2 | 0 | 1 | 10938 | 98 | 2 | 0 | 1 | | | | |
| | | | T2H | 10298 | 93 | 2 | 0 | 2 | 10813 | 98 | 2 | 0 | 2 | | | | |
| | | | T3 | 10313 | 93 | 2 | 0 | 2 | 10829 | 98 | 2 | 0 | 2 | | | | |
| | | | T3H | 10619 | 96 | 3 | 0 | 2 | 11148 | 101 | 3 | 0 | 2 | | | | |
| | | | T4 | 9863 | 89 | 2 | 0 | 2 | 10355 | 93 | 2 | 0 | 2 | | | | |
| | | | T5 | 10682 | 96 | 3 | 0 | 2 | 11218 | 101 | 3 | 0 | 2 | | | | |
| P80 | 109.7 | | T1 | 12482 | 99 | 2 | 0 | 2 | 13104 | 101 | 3 | 0 | 2 | 0.98 | 0.98 | 0.97 | 0.97 |
| | | | T1A | 12232 | 94 | 3 | 0 | 2 | 12844 | 99 | 3 | 0 | 2 | | | | |
| | | | T2 | 11784 | 91 | 2 | 0 | 2 | 12373 | 95 | 2 | 0 | 2 | | | | |
| | | | T2H | 11652 | 90 | 2 | 0 | 2 | 12235 | 94 | 2 | 0 | 2 | | | | |
| | | | T3 | 11657 | 90 | 2 | 0 | 2 | 12250 | 94 | 2 | 0 | 2 | | | | |
| | | | T3H | 12013 | 93 | 2 | 0 | 2 | 12618 | 97 | 2 | 0 | 2 | | | | |
| | | | T4 | 11155 | 86 | 2 | 0 | 2 | 11714 | 90 | 2 | 0 | 2 | | | | |
| | | | T5 | 12068 | 93 | 3 | 0 | 2 | 12675 | 98 | 3 | 0 | 2 | | | | |

Lumen data for effective CCT

| FC Amber | 2200K | 2700K | 3000K | 4000K | 5000K |
|---|---|---|---|---|---|
| 0.6 | 0.75 | 0.86 | 0.88 | 1.00 | 1.09 |

Note: Actual performance may differ as a result of end-user environment and application. All values are design or typical values, measured under laboratory conditions at 25°C. Specifications subject to change without notice.


© 2019-2021 Acuity Brands Lighting, Inc.

© Cyclone Lighting 2021-10

**SPECIFICATIONS**

**LED System**
Proprietary linear LED module incorporates premium LEDs on a robust platform to achieve excellent thermal management. LEDs are placed to promote a uniform appearance. Available in 2700K, 3000K, 3500K or 4000K with CRI>80 or CRI>90, 3 SDCM or Tunable White (2700K-6500K), CRI>80, >90, 3500K and 4000K with CRI>90 have a cyanosis observation index (COI) of 3.3 or less. LED modules and drivers are replaceable from below.

**Construction**
9-12' luminaires ship on 13' (157") pallets, forklift extensions of 72" are required to avoid damage. One piece extruded aluminum housing. Die cast aluminum end caps. 2' unit weight: 10 lbs, 3' unit weight: 14 lbs, 4' unit weight: 18 lbs, 5' unit weight: 22 lbs, 12' unit weight: 48 lbs.

**Optic**
Reflectors fabricated of 22 Ga. steel finished in High Reflectance White powder coat. Flush and Batwing extruded acrylic lens (.08" thick with satin finish, up to 12' continuous. Pop-Down lenses extruded acrylic lens (.08" thick with frosted finish.

**Electrical**
Luminaires are pre-wired with factory installed branch circuit wiring and over-molded quick connects. Standard 120-277V constant current driver includes 0-10V analog dimming. Dimming range 100% to 10%. Power factor > .9. PoE compatible: Integrates with Power over Ethernet lighting systems via standard, low-voltage wires. PoE runs require an independent PoE node and power feed for each luminaire section.

**Emergency**
Emergency Battery output - 10 watts for 90 minutes. Maximum mounting height: 20'(6M). Emergency Circuit with Connected Solutions (DLM1, LMFS1, LMFS2, NLT1, ENL1, CLM1, NXE1, WLXP) shipped standard with leads to connect UL924 compliant device, by others.

**Labels**
UL and cUL listed. Suitable for Dry or Damp Locations, indoor use only.

**Finish**
Polyester powder coat applied over a multi-stage pre-treatment. Canopy and cord white as standard.

**Lumen Maintenance**
Reported: L70 = 81,000 hours Calculated: L70 at > 480,000 hours
L90 > 61,000 hours L90 at > 128,000 hours
(Derived from EPA TM-21 calculator. Based on typical conditions, consult factory for additional data)

**Reliability**
At Focal Point, our products are designed to stand the test of time. Each luminaire is engineered using superior components, manufactured with the utmost care and rigorously tested. Contact us for reliability data.

**Warranty**
LED system rated for operation in ambient environments up to 25°C. 5-year limited warranty

**MOUNTING INFORMATION**



**DIRECT ASYMMETRIC**
Standard Application Example

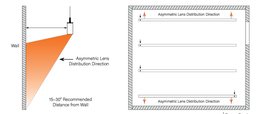


**DIRECT ASYMMETRIC ROOM FILL**
Standard Application Example

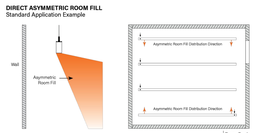


**ORDERING INFORMATION** (Ex: MS15CL-PP-MB-25L40K-DV)

| Model | Lens Type | Finish | Lamp Type | Voltage | Options | Accessories |
|---|---|---|---|---|---|---|
| | PP | | | | | |

**Model**
MS15FL Full face
MS15CL Corsaior
MS15DL Directional Field
MS15SL Spine

**Lens Type**
PP Prismcast Polycarbonate

**Finish**
DB Dark Bronze
FG Forest Green
UG Light Gray
MB Matte Black
MW Matte White
SL Silver
CC Custom Color (Contact factory)

**Lamp Type**
15L35K 15 Watt 3500K LED
15L40K 15 Watt 4000K LED
25L35K 25 Watt 3500K LED
25L35K 25 Watt 3500K LED
25L40K 25 Watt 4000K LED
25L50K 25 Watt 5000K LED

**Voltage**
120 120 Volts
277 277 Volts
347 347 Volts
DV1 120-277 Volts

**Options**
LEL-SA LED Emergency Battery Backup with Die-cast Surface Adapter EAL - Not ADA (n/a with 347V)
LEL-SA-ADA LED Emergency Battery Backup with Die-cast Surface Adapter EAL - Not ADA (120V or 277V only)
FS Single Fuse (n/a 347V)
NAT Natatorium Environment Option

**Accessories**
SA Die-Cast Surface Adapter
Kit with BPC





This product complies with the Buy American Act manufactured in the United States with more than 51% of the component cost of 15 origin. A copy of complete specs found at www.kenall.com/specs.Content of specification sheets is subject to change; please consult www.kenall.com for current product details. ©2022 Kenall Mfg.Co.

MS15_L-103122

# MILLENIUM™ SQUARE

## MS15 SERIES – LOW PROFILE HOUSING

**PROJECT INFORMATION**
Job Name: _____
Fixture Type: _____
Catalog Number: _____
Approved by: _____

**PRODUCT FEATURES:**
Surface mount – ceiling (FL & CL only) or wall mount; 16"Wx16"WxE"D (CL, FL, EL) 21"Wx21"WxE"D (DL)
• Peace of Mind Guarantee®
• Dust and water protected to IP64 standards




**SPECIFICATIONS**

**BASEPLATE:** Marine grade die-cast aluminum, integral heat sink; Baseplate flange interlocks and wraps around lens base producing maximum moisture protection and resistance to entry. Baseplate provided with four point mounting holes and one wireway hole. Standard matte black, dark bronze or matte white exterior TGIC polyester powder coat. 5-step pre-treatment. See Ordering Information for optional finishes.

**REFLECTOR:** Full reflective lens cover – 92% reflectivity.

**LENS:** UV-stabilized, high-impact resistant, virgin injection molded polycarbonate. High efficiency blended frosted lens maximizes uniformity. Lens secured with four concealed captive Torx® style center pin fasteners. Lockable water channeling lens design provides 360° ingress protection.

**LENS BASE/STUD/CABLE:** High impact resistant, injection molded matte black, dark bronze or matte white polycarbonate. Optional Light Grey, Silver, Forest Green or Custom Color (see Ordering Information below) are chemically bonded, impact resistant finishes.

**GASKETING:** Die-cut, closed cell EPDM self adhesive gasket seals baseplate to mounting surface. Closed cell, silicone "O" ring gaskets positioned and friction secured in gasket channels of lens base, baseplate and optional surface adapter.

**HARDWARE:** Pan stainless steel Torx® T-20 with center pin fasteners.

**ELECTRICAL:** Available in 3500K, 4000K, and 5000K color temperatures, 80 CRI. 120-277VAC, 50/60Hz electrical input with high power factor electronic, constant current driver (> 90 PF). Standard 0-10V dimming with 1-100% range; maximum driver source of 200 µA.

**SENSOR & CONTROLS:** Optional control available with compatible third party controls. To see the full list of compatible controls, click here.

**PHOTOMETRICS:** Photometry tested to the IESNA LM-79-08 standard by an ILAC/ISO 7025 accredited laboratory. For additional photometric information, go to www.kenall.com.

**WARRANTY:** Limited five (5) year LED warranty. Peace of Mind Guarantee applies! breakage.

**LISTINGS:** Luminaire is certified to US Standards by either Underwriters Laboratory or Intertek Testing Laboratory for Wet Location. Rating includes Emergency Battery Pack "-LEL" option). UL certified IP64 per IEC 60598.

**ORDERING INFORMATION** (Ex: MS15CL-PP-MB-25L40K-DV)

| Model | Lens Type | Finish | Lamp Type | Voltage | Options | Accessories |
|---|---|---|---|---|---|---|
| | PP | | | | | |

**Model**
MS15FL Full face
MS15CL Corsaior
MS15DL Directional Field
MS15SL Spine

**Lens Type**
PP Prismcast Polycarbonate

**Finish**
DB Dark Bronze
FG Forest Green
UG Light Gray
MB Matte Black
MW Matte White
SL Silver
CC Custom Color (Contact factory)

**Lamp Type**
15L35K 15 Watt 3500K LED
15L40K 15 Watt 4000K LED
25L35K 25 Watt 3500K LED
25L40K 25 Watt 4000K LED
25L50K 25 Watt 5000K LED

**Voltage**
120 120 Volts
277 277 Volts
347 347 Volts
DV1 120-277 Volts

**Options**
LEL-SA LED Emergency Battery Backup with Die-cast Surface Adapter EAL - Not ADA (n/a with 347V)
LEL-SA-ADA LED Emergency Battery Backup with Die-cast Surface Adapter EAL - Not ADA (120V or 277V only)
BPC-SA Bird Proofing Cover with Die-cast Surface Adapter
FS Single Fuse (n/a 347V)
NAT Natatorium Environment Option

**Accessories**
SA Die-Cast Surface Adapter
Kit with BPC

For additional photometry, go to www.kenall.com

# MILLENIUM™ SQUARE

## MS15 SERIES – LOW PROFILE HOUSING

**DIMENSIONAL DATA**




# Seem® 4

LED

F20

FOCAL POINT

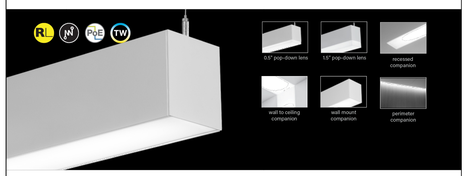


**DIMENSIONAL DATA**

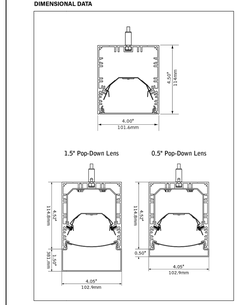


**FEATURES**

Narrow extruded aluminum 4" linear direct LED.

Individual units and continuous runs in 1' increments.

Available in flush, asymmetric, asymmetric room fill, batwing, 0.5" or 1.5" pop-down lens.

LED position and lens material optimized to provide the perfect blend of high performance and visual comfort.

Choice of output levels to meet a wide variety of application needs.

Tunable White: Supports human activity, well-being, and preferences with a light quality that evolves throughout the day.

Connected Solutions: Integrates with wired and wireless building lighting control systems.

PoE compatible: Integrates with Power over Ethernet lighting systems via standard, low-voltage wires.

**PERFORMANCE**

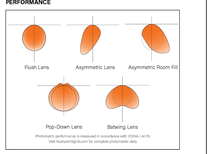


Photometric performance is measured in accordance with IESNA LM-79. Visit focalpointlights.com for complete photometric data.

A brand of legrand

Focal Point LLC | 4141 S. Pulaski Rd, Chicago, IL 60632 | 773.247.9494 | focalpointlights.com

June 2022 AM

**4' PERFORMANCE CHART**

| Lumen Output | Nominal Lumens | Tested System Watts | LPW BW | LPW FL | LPW AS | LPW AF |
|---|---|---|---|---|---|---|
| 275LF | 1100 | 9.5 | 110 | 106 | 114 | 114 |
| 375LF | 1500 | 12.5 | 119 | 114 | 123 | 123 |
| 625LF | 2500 | 21.4 | 119 | 113 | 122 | 122 |
| 1000LF | 4000 | 35.0 | 117 | 112 | 121 | 121 |
| 1125LF | 4500 | 39.6 | 116 | 111 | 119 | 119 |
| 1250LF | 5000 | 43.5 | 115 | 110 | 119 | 118 |

Based on 3500K, 80 CRI, 4' fixture. Luminaire multiplier 90+ CRI = 0.91. Luminaire multiplier 80+ CRI = 0.87. Actual wattage may vary +/- 5%.

**4' PERFORMANCE CHART - POP-DOWN**

| Lumen Output | Nominal Lumens | 0.5" Tested System Watts | 0.5" LPW | 1.5" Tested System Watts | 1.5" LPW |
|---|---|---|---|---|---|
| 275LF | 1100 | 12.5 | 89 | 13 | 85 |
| 375LF | 1500 | 16.7 | 91 | 18 | 86 |
| 625LF | 2500 | 29.8 | 88 | 30 | 84 |
| 750LF | 3000 | 36 | 81 | 36 | 82 |
| 875LF | 3500 | 40.6 | 91 | 43 | 81 |
| 1000LF | 4000 | 52 | 77 | 51 | 79 |

Based on 3500K, 80 CRI, 4' fixture. Luminaire multiplier 90+ CRI = 0.91. Luminaire multiplier 80+ CRI = 0.87. Actual wattage may vary +/- 5%.

QS 10 DAY Options in orange qualify for the Quicksilva program. Run lengths in 1' increments, 1000' total. Refer to Quicksilva Guide for complete details. Housing: Die-cast aluminum.

Focal Point LLC reserves the right to change specifications for product improvement without notification.

project:

**DETAILS**




**4' PERFORMANCE CHART**

| Lumen Output | Nominal Lumens | Tested System Watts | LPW BW | LPW FL |
|---|---|---|---|---|
| 275LF | 1100 | 13.30 | 82.3 | 83.2 |
| 375LF | 1500 | 17.34 | 90.8 | 86.5 |
| 625LF | 2500 | 27.84 | 94.0 | 89.5 |
| 875LF | 3500 | 37.22 | 98.9 | 94.2 |
| 1000LF | 4000 | 42.39 | 99.2 | 94.4 |
| 1125LF | 4500 | 50.27 | 93.9 | 89.4 |

Based on 3500K, MCRI, 4' fixture. Luminaire output may vary +/- 5%. Actual wattage may vary +/- 5%.

**4' PERFORMANCE CHART - POP-DOWN**

| Lumen Output | Nominal Lumens | 0.5" Tested System Watts | 0.5" LPW | 1.5" Tested System Watts | 1.5" LPW |
|---|---|---|---|---|---|
| 275LF | 1100 | 17.4 | 64.7 | 16.33 | 67.3 |
| 375LF | 1500 | 22.79 | 68.5 | 21.58 | 70.0 |
| 625LF | 2500 | 35.49 | 70.6 | 33.96 | 73.8 |
| 750LF | 3000 | 42.39 | 70.8 | 40.28 | 74.5 |

Based on 3500K, MCRI, 4' fixture. Luminaire output may vary +/- 5%. Actual wattage may vary +/- 5%.

**Lumen Multipliers**

| CRI | Multiplier |
|---|---|
| 80+ | 1.00 |
| 90+ | 0.89 |

**Wattage Multipliers**

| CCT | Multiplier |
|---|---|
| 2700K | 1.00 |
| 3000K | 0.92 |
| 3500K | 0.88 |
| 4000K | 0.86 |
| 5000K | 0.85 |
| 5700K | 0.87 |
| 6500K | 0.90 |

Focal Point LLC reserves the right to change specifications for product improvement without notification.

project:

**DETAILS**

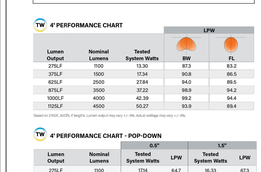
Standard Patterns with 90° Corners
Rectangular Patterns - 4'x8'ft
Square Patterns - 8'x8'ft
Rectangular Patterns - 4'x16'ft
Square Patterns - 16'x16'ft
mounting hardware shown for 4' and 8' runs
field splice kit required at each 8' joint
Drain Wall
Drain Wall
Drain Wall
Drain W

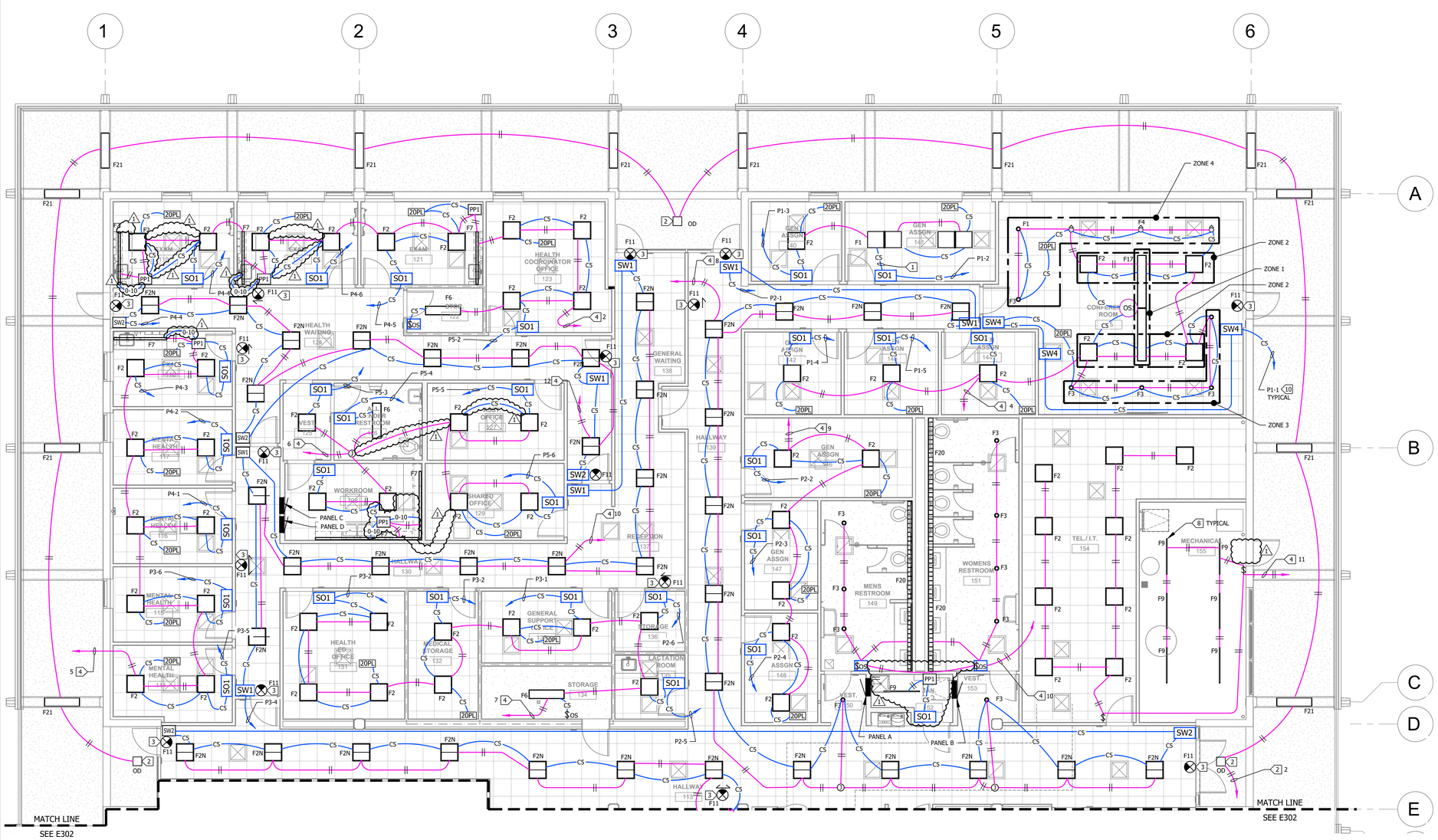


3/16" = 1'-0"
0 1' 4' 8' 12'

## ADMINISTRATION BUILDING LIGHTING PLAN - WEST

SCALE: 3/16"=1'-0"

1 / E301

NORTH

### SHEET NOTES:

1. CONTRACTOR SHALL VERIFY LOCATION, CEILING TYPE, TRIM, AND REQUIREMENTS OF ALL LIGHT FIXTURES AND CONTROL PRIOR TO BID PROPOSAL, ROUGH-IN, AND FINISH INSTALLATION.
2. CONTRACTOR SHALL, IN ROUTING ALL CIRCUITS, INCREASE CONDUCTOR & CONDUIT SIZE TO ALLOW FOR VOLTAGE DROP SHOULD THE CONTRACTOR EXCEED ROUTING INDICATED ON DRAWING. ENGINEER OF RECORD MUST BE NOTIFIED PRIOR TO ANY DEVIATIONS FROM APPROVED PLAN CHECK (PERMIT SET) DRAWINGS.
3. CONTRACTOR SHALL FURNISH AND INSTALL PULL BOXES AS REQUIRED TO INSTALL CONDUCTORS PER CONDUCTOR MANUFACTURERS RECOMMENDATIONS, PER THE NATIONAL ELECTRICAL CODE AND PER LOCAL AUTHORITIES HAVING JURISDICTION.
4. 3/4" CONDUIT MINIMUM UNLESS OTHERWISE NOTED.
5. ALL LIGHTING FIXTURES SHALL BE SECONDARILY SUPPORTED WITH SAFETY CABLES, PROVIDED BY CONTRACTOR.
6. VERIFY LOCATION OF ALL DEVICES ON ARCHITECTURAL PLANS.
7. MAINTAIN A MAXIMUM 2% VOLTAGE DROP ON ALL LIGHTING HOMERUNS.
8. ALL EXIT SIGNS ARE +12" TO CENTER LINE OF FIXTURE ABOVE DOOR FRAME UNLESS OTHERWISE NOTED.
9. CONTRACTOR SHALL PROVIDE ALL BACKING, BRACKETS, SUPPORTS, AND MOUNTING HARDWARE NECESSARY TO PROPERLY INSTALL LIGHTING FIXTURES.
10. VERIFY THE EXACT ROUTING OF ALL EXPOSED CONDUIT WITH OWNER PRIOR TO INSTALLATION.
11. COORDINATE WORK WITH OTHER TRADES. OBTAIN ALL DRAWINGS THAT WILL REQUIRE COORDINATION AND PROVIDE ALL ELECTRICAL CONNECTIONS, DEVICES, AND WIRING REQUIRED WHETHER SHOWN ON ELECTRICAL DRAWINGS OR NOT.
12. PROVIDE CODE SIZED EQUIPMENT GROUNDING CONDUCTOR IN ALL LIGHTING SYSTEM CONDUITS.
13. VERIFY AND PROVIDE JUNCTION BOXES, CONDUIT, DISCONNECT SWITCH, AND WIRING ASSOCIATED WITH SIGNAGE/GRAPHICS ON GRAPHICS/SIGNAGE DRAWINGS.
14. ALL LIGHTING FIXTURES, EXCEPT EMERGENCY, SHALL BE CONTROLLED BY DIMMER RACK, POWER LINK PANELBOARD, PHOTOCELL, TIMECLOCK, OR LIGHTING CONTROL RELAY SYSTEM UNLESS OTHERWISE NOTED.
15. ALL LIGHTING FEEDERS (FROM LIGHT FIXTURES TO DIMMER RACKS) SHALL BE STRANDED #10 AWG THHN MINIMUM WITH DEDICATED NEUTRALS FOR EACH CIRCUIT, NO SHARED NEUTRALS ARE PERMISSIBLE. DERATING OF CONDUCTORS SHALL BE PER NEC 300-5 FOR COMBINED HOMERUNS WHERE EACH NEUTRAL IS A CURRENT CARRYING CONDUCTOR.

### KEY NOTES:

1. PENDANT TO 9'-0"
2. CONNECT TO LIGHTING CONTROLLER ARP IN ELECTRICAL ROOM CIRCUIT ARP-1 (PANEL G - CIRCUIT 25).
3. EXIT LIGHT POWER , PANEL B-1 AS NOTED.
4. 3/4"C-2#12 & 1#12 GROUND TO PANEL B CIRCUITS AS NOTED.
5. NOT USED.
6. NOT USED.
7. NOT USED.
8. PENDANT MOUNT, RIGID PIPE 2'-6" FROM CEILING INSTALL EMT CONDUIT BETWEEN FIXTURES.
9. SURFACE MOUNT TO CEILING.
10. SEE E300A FOR BRIDGE GATEWAY SYSTEM.

THE ENTIRE BUILDING IS CONNECTED TO AN EMERGENCY GENERATOR BACK UP POWER. ALL LIGHTING WILL TURN ON AT 100% IF NORMAL POWER IS LOST

PROVIDE EMERGENCY AUTOMATICALLY ELECTRICAL ILLUMINATION (CBC 1008.3.2) IN EVENT OF POWER SUPPLY FAILURE IN ROOMS, SPACES AND BUILDING THAT REQUIRE TWO OR MORE MEANS OF EGRESS. IN SPACE: AISLES, CORRIDORS AND EXIT ACCESS STAIRWAYS AND RAMPS.

AN EMERGENCY ELECTRICAL SYSTEM (ENTIRE BUILDING IS ON EMERGENCY GENERATOR WHEN LOSS OF COMMERCIAL POWER OCCURS) SHALL AUTOMATICALLY ILLUMINATE ALL OF THE FOLLOWING AREAS: (CBC 1008.3.3)
1. ELECTRICAL EQUIPMENT ROOMS. (INCLUDED IN PROJECT)
2. FIRE COMMAND CENTERS. (NONE AT PROJECT)
3. FIRE PUMP ROOMS. (NONE AT PROJECT)
4. GENERATOR ROOMS. (NONE AT PROJECT)

KEY MAP

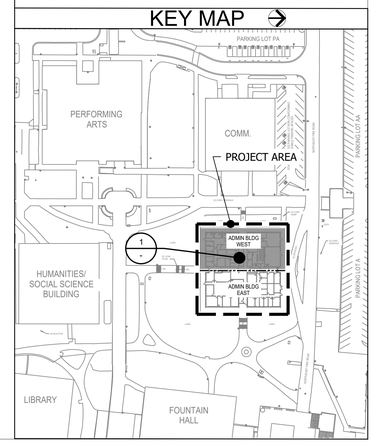



DIVISION OF THE STATE ARCHITECT

AMADOR WHITTLE
ARCHITECTS, INC.
28328 AGOURA ROAD, SUITE 203
AGOURA HILLS, CA 91301
(805) 530-3938 , (818) 874-0071


Ventura County Community College

PROJECT TITLE

# MOORPARK COLLEGE ADMINISTRATION BUILDING RENOVATION

7075 CAMPUS ROAD
MOORPARK, CA 91320


CONSULTANT
LUCCI & ASSOCIATES INC.
CONSULTING ELECTRICAL ENGINEERS
3251 CORTE MALPASO, #511
CAMARILLO, CA 93012-8094
(805) 389-6520 FAX (805) 389-6519



**LUCCI & ASSOCIATES, INC.** reserve their commonlaw copyright and other property rights in these plans. These plans and drawings are not to be reproduced, changed, or copied in any form or manner whatsoever without first obtaining the expressed written permission and consent of LUCCI & ASSOC. INC nor are they to be assigned to any third party without obtaining said written permission and consent.


STAMPS/SEALS

REGISTERED PROFESSIONAL ENGINEER KENNETH W. LUCCI No. E 14332 Exp. 08/30/2026 ELECTRICAL STATE OF CALIFORNIA

12/08/2023 - DSA RESUBMITTAL

1 ADDENDUM 1, 03-13-2025

SHEET TITLE:

# ADMINISTRATION BUILDING LIGHTING PLAN - WEST

| | |
|---|---|
| PROJECT NO.: | 21-MPC-040 |
| PROJECT ARCH: | |
| DRAWN: | LK/DS |
| CHECKED: | |

SHEET NUMBER:

# E301

6/04/2024 UPDATE

DATE: 12/08/23 SHEET: ___ OF ___

IF THIS SHEET IS NOT 30" X 42", IT IS NOT FULL SIZE, SCALE ACCORDINGLY
L.A.I.# 21-375


Copyright Lucci and Associates Consulting Electrical Engineers. Deviations from this drawing will not be made without their expressed written permission.


PATHNAME: G:\21\375\ELSheets
DRAWING FILENAME: 21-375E301
DRAFTER: CM03
DATE: 14 March 2025
TIME: 3:46 pm

Drafter:CM03 - Paper Size: 12.0 x 24.0 in - Scale:1.0 - Plot Date/Time:12/13/2023 1:39:00 PM - Plotted by:Chris Mann - Plot Style Table:ARCH E1.ctb - Last Saved By:Chris Mann - Last Saved Time:12/13/2023 1:37:39 PM - Xrefs:G:\21\375\Drawings\Backup\20230808_[ARCH]E201-23-375A15.dwg G:\21\375\Drawings\Backup\20230808_[ARCH]E202-23-375A14.dwg

Drafter: CM03 - DATE: DEC 06, 2023 TIME: 3:00 PM

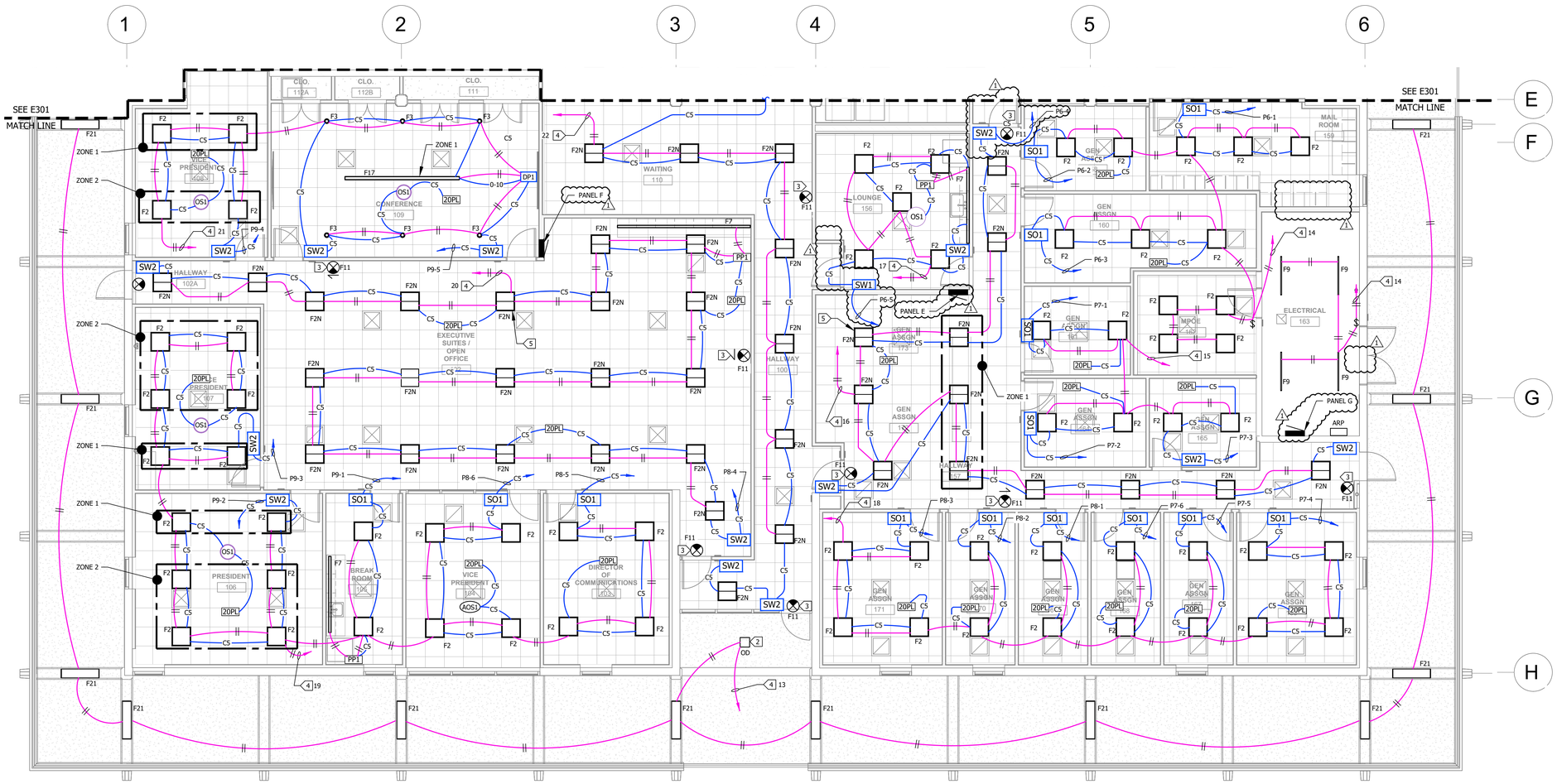


3/16" = 1'-0"

0 1' 4' 8' 12'

## ADMINISTRATION BUILDING LIGHTING PLAN - EAST

SCALE: 3/16"=1'-0"

1 - E302

NORTH

### SHEET NOTES:

1. CONTRACTOR SHALL VERIFY LOCATION, CEILING TYPE, TRIM, AND REQUIREMENTS OF ALL LIGHT FIXTURES AND CONTROL PRIOR TO BID PROPOSAL, ROUGH-IN, AND FINISH INSTALLATION.
2. CONTRACTOR SHALL, IN ROUTING ALL CIRCUITS, INCREASE CONDUCTOR & CONDUIT SIZE TO ALLOW FOR VOLTAGE DROP SHOULD THE CONTRACTOR EXCEED ROUTING INDICATED ON DRAWING. ENGINEER OF RECORD MUST BE NOTIFIED PRIOR TO ANY DEVIATIONS FROM APPROVED PLAN CHECK (PERMIT SET) DRAWINGS.
3. CONTRACTOR SHALL FURNISH AND INSTALL PULL BOXES AS REQUIRED TO INSTALL CONDUCTORS PER CONDUCTOR MANUFACTURERS RECOMMENDATIONS, PER THE NATIONAL ELECTRICAL CODE AND PER LOCAL AUTHORITIES HAVING JURISDICTION.
4. 3/4" CONDUIT MINIMUM UNLESS OTHERWISE NOTED.
5. ALL LIGHTING FIXTURES SHALL BE SECONDARILY SUPPORTED WITH SAFETY CABLES, PROVIDED BY CONTRACTOR.
6. VERIFY LOCATION OF ALL DEVICES ON ARCHITECTURAL PLANS.
7. MAINTAIN A MAXIMUM 2% VOLTAGE DROP ON ALL LIGHTING HOMERUNS.
8. ALL EXIT SIGNS ARE +12" TO CENTER LINE OF FIXTURE ABOVE DOOR FRAME UNLESS OTHERWISE NOTED.
9. CONTRACTOR SHALL PROVIDE ALL BACKING, BRACKETS, SUPPORTS, AND MOUNTING HARDWARE NECESSARY TO PROPERLY INSTALL LIGHTING FIXTURES.
10. VERIFY THE EXACT ROUTING OF ALL EXPOSED CONDUIT WITH OWNER PRIOR TO INSTALLATION.
11. COORDINATE WORK WITH OTHER TRADES. OBTAIN ALL DRAWINGS THAT WILL REQUIRE COORDINATION AND PROVIDE ALL ELECTRICAL CONNECTIONS, DEVICES, AND WIRING REQUIRED WHETHER SHOWN ON ELECTRICAL DRAWINGS OR NOT.
12. PROVIDE CODE SIZED EQUIPMENT GROUNDING CONDUCTOR IN ALL LIGHTING SYSTEM CONDUITS.
13. VERIFY AND PROVIDE JUNCTION BOXES, CONDUIT, DISCONNECT SWITCH, AND WIRING ASSOCIATED WITH SIGNAGE/GRAPHICS ON GRAPHICS/SIGNAGE DRAWINGS.
14. ALL LIGHTING FIXTURES, EXCEPT EMERGENCY, SHALL BE CONTROLLED BY DIMMER RACK, POWER LINK PANELBOARD, PHOTOCELL, TIMECLOCK, OR LIGHTING CONTROL RELAY SYSTEM UNLESS OTHERWISE NOTED.
15. ALL LIGHTING FEEDERS (FROM LIGHT FIXTURES TO DIMMER RACKS) SHALL BE STRANDED #10 AWG THHN MINIMUM WITH DEDICATED NEUTRALS FOR EACH CIRCUIT, NO SHARED NEUTRALS ARE PERMISSIBLE. DERATING OF CONDUCTORS SHALL BE PER NEC 300-5 FOR COMBINED HOMERUNS WHERE EACH NEUTRAL IS A CURRENT CARRYING CONDUCTOR.

### KEY NOTES:

1. 3/4"C-2#12 & 1#12 GROUND & 2#14 (PURPLE & GRAY FOR 0-10V DIMMING).
2. CONNECT TO EXISTING ARP LIGHTING CIRCUIT #2 (PANEL G - 23).
3. EXIT LIGHT POWER , PANEL B-1.
4. 3/4"C-2#12 & 1#12 GROUND TO PANEL B CIRCUITS AS NOTED.
5. ZONE 1 AND 2 AS ALTERNATE FIXTURES.

THE ENTIRE BUILDING IS CONNECTED TO AN EMERGENCY GENERATOR BACK UP POWER. ALL LIGHTING WILL TURN ON AT 100% IF NORMAL POWER IS LOST

PROVIDE EMERGENCY AUTOMATICALLY ELECTRICAL ILLUMINATION (CBC 1008.3.2) IN EVENT OF POWER SUPPLY FAILURE IN ROOMS, SPACES AND BUILDING THAT REQUIRE TWO OR MORE MEANS OF EGRESS. IN SPACE: AISLES, CORRIDORS AND EXIT ACCESS STAIRWAYS AND RAMPS.

AN EMERGENCY ELECTRICAL SYSTEM (ENTIRE BUILDING IS ON EMERGENCY GENERATOR WHEN LOSS OF COMMERCIAL POWER OCCURS) SHALL AUTOMATICALLY ILLUMINATE ALL OF THE FOLLOWING AREAS: (CBC 1008.3.3)
1. ELECTRICAL EQUIPMENT ROOMS. (INCLUDED IN PROJECT)
2. FIRE COMMAND CENTERS. (NONE AT PROJECT)
3. FIRE PUMP ROOMS. (NONE AT PROJECT)
4. GENERATOR ROOMS. (NONE AT PROJECT)

KEY MAP

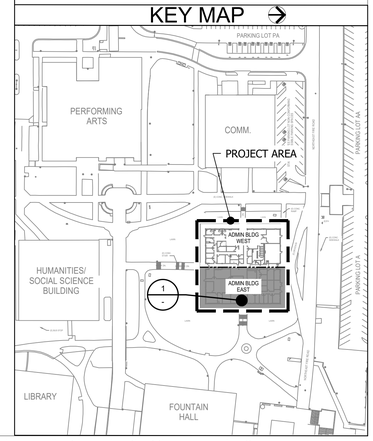


DIVISION OF THE STATE ARCHITECT

AMADOR WHITTLE ARCHITECTS, INC.
28328 AGOURA ROAD, SUITE 203
AGOURA HILLS, CA 91301
(805) 530-3938 , (818) 874-0071

Ventura County Community College

PROJECT TITLE

**MOORPARK COLLEGE ADMINISTRATION BUILDING RENOVATION**

7075 CAMPUS ROAD
MOORPARK, CA 91320

CONSULTANT
LUCCI & ASSOCIATES INC.
CONSULTING ELECTRICAL ENGINEERS
3251 CORTE MALPASO, #511
CAMARILLO, CA 93012-8094
(805) 389-6520 FAX (805) 389-6519

**LUCCI & ASSOCIATES, INC.** reserve their commonlaw copyright and other property rights in these plans. These plans and drawings are not to be reproduced, changed, or copied in any form or manner whatsoever without first obtaining the expressed written permission and consent of LUCCI & ASSOC. INC nor are they to be assigned to any third party without obtaining said written permission and consent.

STAMPS/SEALS

REGISTERED PROFESSIONAL ENGINEER KENNETH W. LUCCI No. E14164 Exp. 08/30/2026 ELECTRICAL STATE OF CALIFORNIA

12/08/2023 - DSA RESUBMITTAL

1 ADDENDUM 1, 03-13-2025

SHEET TITLE:

ADMINISTRATION BUILDING LIGHTING PLAN - EAST

| | | | |
|---|---|---|---|
| PROJECT NO.: | 21-MPC-040 | PROJECT ARCH: | |
| DRAWN: | LK/DS | CHECKED: | |

SHEET NUMBER:

**E302**

6/04/2024 UPDATE

DATE: 12/08/23 SHEET: ___ OF ___

IF THIS SHEET IS NOT 30" X 42", IT IS NOT FULL SIZE, SCALE ACCORDINGLY
L.A.I.# 21-375

Copyright Lucci and Associates Consulting Electrical Engineers. Deviations from this drawing will not be made without their expressed written permission.

PATHNAME: G:\21\375\ELSheets DRAWING FILENAME: 21-375E302 DRAFTER: CM03 DATE: 14 March 2025 TIME: 3:46 pm

Drafter: CM03 - Revit Ver: 13.0
Last Saved: 3/14/2025 11:19:30 AM
Plot By: KEN W. LUCCI
Xref: G:\21\375\Work\BACKDWG_DATED\2021-12-17\A101.dwg
Xref: G:\21\375\Work\BACKDWG_DATED\2021-12-17\A102.dwg
Xref: G:\21\375\Work\BACKDWG_DATED\2021-12-17\A103.dwg
Xref: G:\21\375\Work\BACKDWG_DATED\2021-12-17\A104.dwg

Drafter: CM03 - Last Saved Time: 11/20/2023 3:59:09 PM - Plot Time: 11/20/2023 3:59:09 PM - File Name: G:\21\375\ELSheets\21-375E302.dwg

DRAWING FILENAME: 21-375E302 DRAFTER: CM03 DATE: NOV 20, 2023 TIME: 3:59 PM

DRAFTER: CM03 DRAWING FILENAME: 21-375E401 PATHNAME: G:\21\375\EL\Sheets TIME: 3:46 pm DATE: 14 March 2025

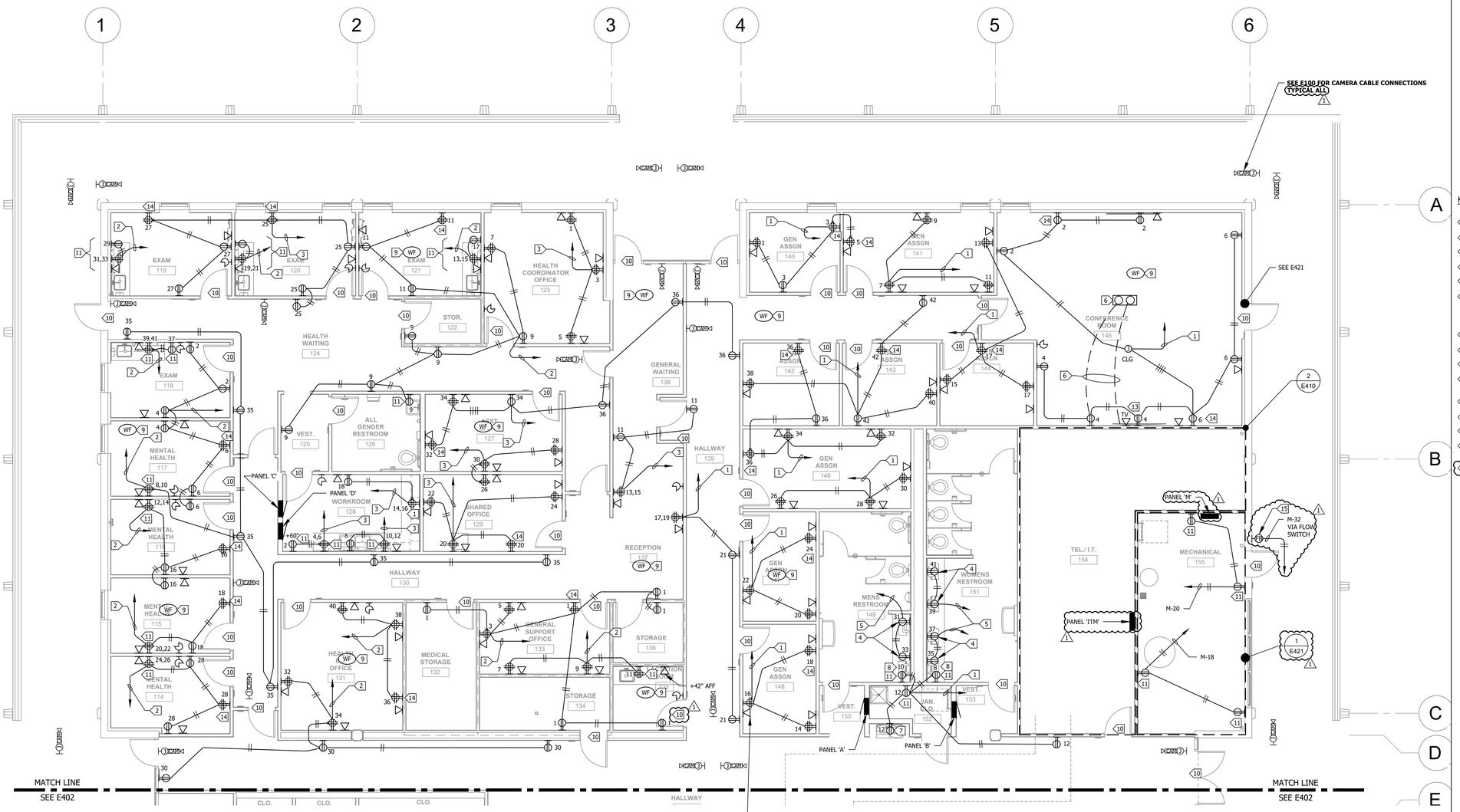


TYPICAL - DENOTES 4 CAT 6 WITH 1"C TO CEILING CAVITY & ROUTE CABLE IN J-HOOKS TO ROOM 154 CABLE TRAY (FAR END) WITH 15 FOOT OF ADDITIONAL CABLE, LABEL BOTH ENDS & TERMINATE IN RACKS PER MOORPARK COLLEGE IT DEPARTMENT

3/16" = 1'-0"
0 1' 4' 8' 12'

## ADMINISTRATION BUILDING POWER PLAN - WEST

SCALE: 3/16"=1'-0"

1 / E401

N

### SHEET NOTES:

1. CONTRACTOR SHALL VERIFY LOCATION & REQUIREMENTS OF ALL DEVICES REQUIRING ELECTRICAL CONNECTION PRIOR TO BID PROPOSAL, ROUGH-IN AND FINISH.
2. CONTRACTOR SHALL, IN ROUTING ALL CIRCUITS, INCREASE CONDUCTOR & CONDUIT SIZE TO ALLOW FOR VOLTAGE DROP SHOULD THE CONTRACTOR EXCEED ROUTING INDICATED ON DRAWING. ENGINEER OF RECORD MUST BE NOTIFIED PRIOR TO ANY DEVIATIONS FROM APPROVED PLAN CHECK (PERMIT SET) DRAWINGS.
3. COORDINATE WORK WITH OTHER TRADES. OBTAIN ALL DRAWINGS THAT WILL REQUIRE COORDINATION AND PROVIDE ALL ELECTRICAL CONNECTIONS, DEVICES, AND WIRING REQUIRED WHETHER SHOWN ON ELECTRICAL DRAWINGS OR NOT.
4. CONTRACTOR SHALL FURNISH AND INSTALL PULL BOXES AS REQUIRED TO INSTALL CONDUCTORS PER CONDUCTOR MANUFACTURERS RECOMMENDATIONS, PER THE NATIONAL ELECTRICAL CODE AND PER LOCAL AUTHORITIES HAVING JURISDICTION.
5. 3/4" CONDUIT MINIMUM U.O.N.
6. PROVIDE CODE SIZE EQUIPMENT GROUNDING CONDUCTORS IN ALL OCCUPIED CONDUITS.
7. ALL DEVICES WITH IG SUBSCRIPT, ARE ISOLATED GROUND RECEPTACLES WITH SEPARATE IG CONDUCTOR TO PANELBOARD.
8. PROVIDE CONTROLS FOR MECHANICAL EQUIPMENT PER MECHANICAL DOCUMENTS. VERIFY LOCATION AND REQUIREMENTS OF MECHANICAL EQUIPMENT ON MECHANICAL DOCUMENTS.
9. VERIFY LOCATION OF ALL DEVICES ON ARCHITECTURAL PLANS.
10. VERIFY THE EXACT ROUTING OF ALL EXPOSED CONDUIT WITH OWNER PRIOR TO INSTALLATION.

### KEY NOTES:

1. 3/4"C-6#12 & 1#12 GROUND TO PANEL 'A' CIRCUITS AS NOTED.
2. 3/4"C-6#12 & 1#12 GROUND TO PANEL 'C' CIRCUITS AS NOTED.
3. 3/4"C-6#12 & 1#12 GROUND TO PANEL 'D' CIRCUITS AS NOTED.
4. EACH SINK REQUIRES GFCI RECEPTACLE BELOW ISA PER MFG.
5. 3/4"C - 4#12 & 1#12 GROUND TO PANEL A.
6. HUBBEL 1 SERIES FLOOR BOX IN CONCRETE BELOW CONF. TABLE, PROVIDE DUPLEX (CIRCUIT 4), PROVIDE (2) 1-1/4"C - TO VIDEO MONITOR BOX AT +60" WITH (2) CAT 6 TERMINATE AT THIS MONITOR J-BOX & (2) 1-1/4"C WITH (4) CAT 6 CONTINUE TO IDF, A TOTAL OF 4 CAT 6 LEAVE FLOOR BOX - 2 TO EACH LOCATION.
7. GFCI RECEPTACLE.
8. CONNECT TO PLUMBING POWER CONTROL TRANSFORMER.
9. WIFI IN CEILING WITH 2 CAT 6 TO ROOM 154.
10. 2 CAT 6 (10 FOOT LOOP EACH) ABOVE DOOR WITH ACCESS INTO DOOR FRAME (COORDINATE WITH ARCHITECT) FROM SECURITY RACK IN ROOM 154. 1
11. +42" AFF GFCI RECEPTACLE.
12. +42" AFF RECEPTACLE.
13. +60" AFF VIDEO RECEPTACLE (RECESSED) VERIFY WITH ARCHITECT.
14. CONTROLLED OUTLET WITH SPLIT WIRED RECEPTACLE, LABEL PER TITLE 24 REQUIREMENTS. USE PLUG LOAD CONTROLLER FROM LIGHTING PLANS.
15. FIRE BELL PER FIRE SPRINKLER PLANS. 1

### KEY MAP

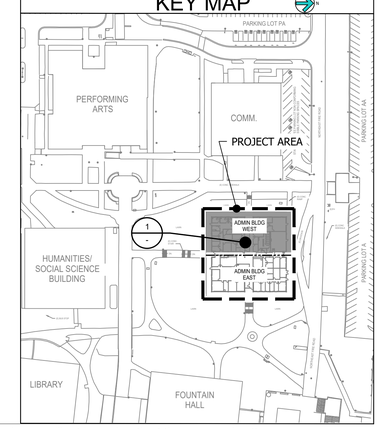


Copyright Lucci and Associates Consulting Electrical Engineers. Deviations from this drawing will not be made without their expressed written permission.

DIVISION OF THE STATE ARCHITECT

AMADOR WHITTLE ARCHITECTS, INC.
28328 AGOURA ROAD, SUITE 203
AGOURA HILLS, CA 91301
(805) 530-3938 , (818) 874-0071

Ventura County Community College

PROJECT TITLE

# MOORPARK COLLEGE ADMINISTRATION BUILDING RENOVATION

7075 CAMPUS ROAD
MOORPARK, CA 91320

CONSULTANT

LUCCI & ASSOCIATES INC.
CONSULTING ELECTRICAL ENGINEERS
3251 CORTE MALPASO, #511
CAMARILLO, CA 93012-8094
(805) 389-6520 FAX (805) 389-6519

LUCCI & ASSOCIATES, INC. reserve their commonlaw copyright and other property rights in these plans. These plans and drawings are not to be reproduced, changed, or copied in any form or manner whatsoever without first obtaining the expressed written permission and consent of LUCCI & ASSOC. INC nor are they to be assigned to any third party without obtaining said written permission and consent.

STAMPS/SEALS

REGISTERED PROFESSIONAL ENGINEER KENNETH W. LUCCI No. E14140 Exp. 08/30/2026 ELECTRICAL STATE OF CALIFORNIA

12/08/2023 - DSA RESUBMITTAL

1 ADDENDUM 1, 03-13-2025

SHEET TITLE:

# ADMINISTRATION BUILDING POWER PLAN - WEST

| | | | |
|---|---|---|---|
| PROJECT NO.: | 21-MPC-040 | PROJECT ARCH.: | |
| DRAWN: | LK/DS | CHECKED: | |

SHEET NUMBER:

# E401

6/04/2024 UPDATE

DATE: 12/08/23 SHEET: ____ OF ____

IF THIS SHEET IS NOT 30" X 42", IT IS NOT FULL SIZE, SCALE ACCORDINGLY

L.A.I.# 21-375

Drafter: CM03 Date: 3:23 File: G:\21\375\EL\Sheets\21-375E401.dwg Rev Fix: 0 Rev Fix Date: 3/14/2025 XREFS G:\21\375\EL\Sheets\21-375TB.dwg G:\21\375\EL\Sheets\21-375E100.dwg G:\21\375\EL\Sheets\21-375E402.dwg

Drafter: CM03; G:\21\375\EL\Sheets\21-375E401.dwg; DATE: MAR 13, 2025 TIME: 10:51 AM

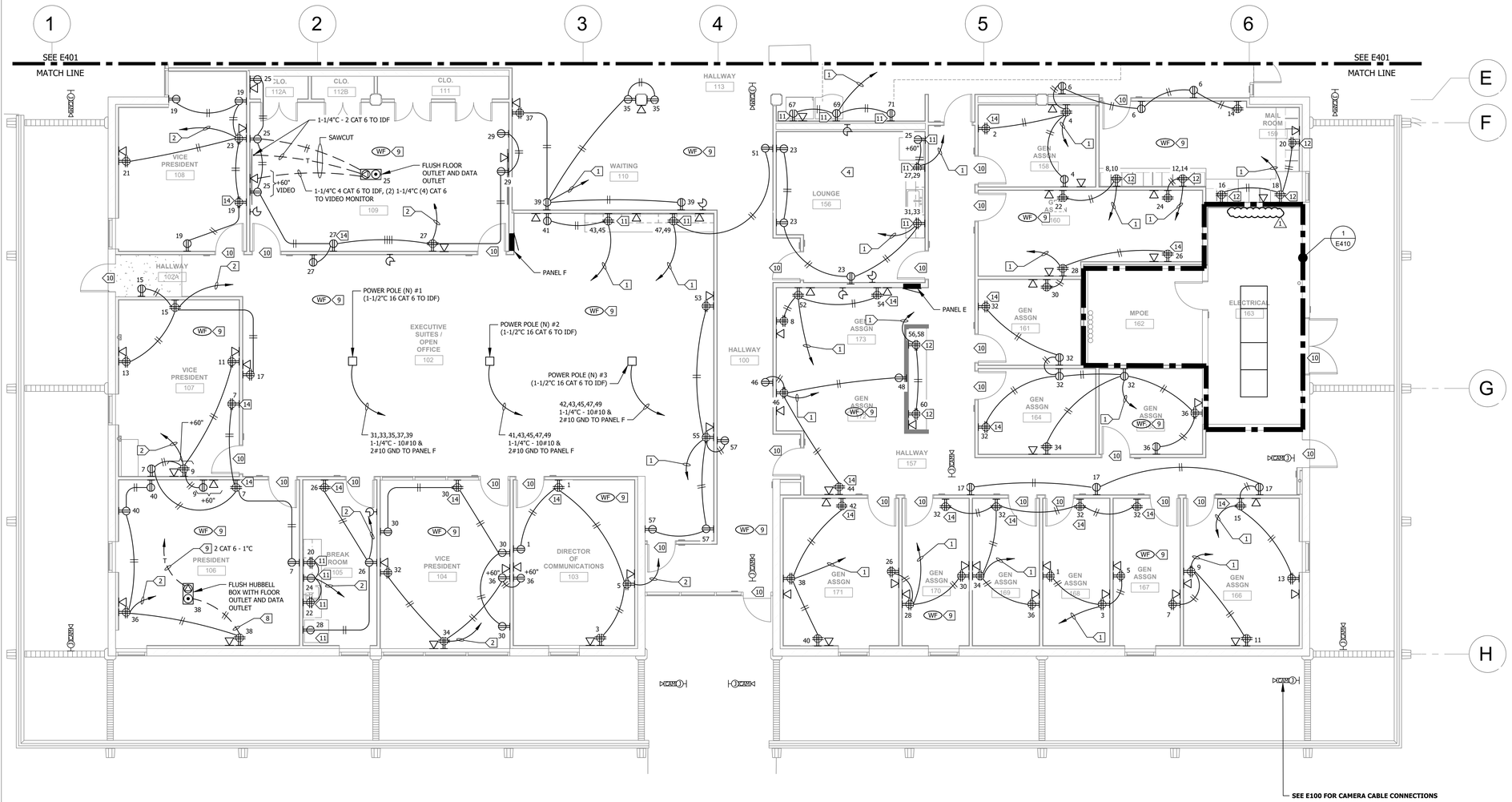


3/16" = 1'-0"
0 1' 4' 8' 12'

## ADMINISTRATION BUILDING POWER PLAN - EAST

SCALE: 3/16"=1'-0"

1 / E402

N

### SHEET NOTES:

1. CONTRACTOR SHALL VERIFY LOCATION & REQUIREMENTS OF ALL DEVICES REQUIRING ELECTRICAL CONNECTION PRIOR TO BID PROPOSAL, ROUGH-IN AND FINISH.
2. CONTRACTOR SHALL, IN ROUTING ALL CIRCUITS, INCREASE CONDUCTOR & CONDUIT SIZE TO ALLOW FOR VOLTAGE DROP SHOULD THE CONTRACTOR EXCEED ROUTING INDICATED ON DRAWING. ENGINEER OF RECORD MUST BE NOTIFIED PRIOR TO ANY DEVIATIONS FROM APPROVED PLAN CHECK (PERMIT SET) DRAWINGS.
3. COORDINATE WORK WITH OTHER TRADES. OBTAIN ALL DRAWINGS THAT WILL REQUIRE COORDINATION AND PROVIDE ALL ELECTRICAL CONNECTIONS, DEVICES, AND WIRING REQUIRED WHETHER SHOWN ON ELECTRICAL DRAWINGS OR NOT.
4. CONTRACTOR SHALL FURNISH AND INSTALL PULL BOXES AS REQUIRED TO INSTALL CONDUCTORS PER CONDUCTOR MANUFACTURERS RECOMMENDATIONS, PER THE NATIONAL ELECTRICAL CODE AND PER LOCAL AUTHORITIES HAVING JURISDICTION.
5. 3/4" CONDUIT MINIMUM U.O.N.
6. PROVIDE CODE SIZE EQUIPMENT GROUNDING CONDUCTORS IN ALL OCCUPIED CONDUITS.
7. ALL DEVICES WITH IG SUBSCRIPT, ARE ISOLATED GROUND RECEPTACLES WITH SEPARATE IG CONDUCTOR TO PANELBOARD.
8. PROVIDE CONTROLS FOR MECHANICAL EQUIPMENT PER MECHANICAL DOCUMENTS. VERIFY LOCATION AND REQUIREMENTS OF MECHANICAL EQUIPMENT ON MECHANICAL DOCUMENTS.
9. VERIFY LOCATION OF ALL DEVICES ON ARCHITECTURAL PLANS.
10. VERIFY THE EXACT ROUTING OF ALL EXPOSED CONDUIT WITH OWNER PRIOR TO INSTALLATION.

### KEY NOTES:

1. 3/4"C-6#12 & 1#12 GROUND TO PANEL 'E'.
2. 3/4"C-6#12 & 1#12 GROUND TO PANEL 'F'.
3. NOT USED
4. NOT USED.
5. NOT USED.
6. NOT USED.
7. NOT USED.
8. SAW CUT FLOOR FOR (2) 1" CONDUIT & REPAIR TO ORIGINAL CONCRETE.
9. WIFI IN CEILING WITH 2 CAT 6 TO ROOM 154.
10. 2 CAT 6 (10 FOOT LOOP EACH) ABOVE DOOR WITH ACCESS INTO DOOR FRAME (COORDINATE WITH ARCHITECT) FROM SECURITY RACK IN ROOM 154. 1
11. +42" AFF GFCI RECEPTACLE.
12. +42" AFF RECEPTACLE.
13. +60" AFF VIDEO RECEPTACLE (RECESSED) VERIFY WITH ARCHITECT.
14. CONTROLLED OUTLET WITH SPLIT WIRED RECEPTACLE, LABEL PER TITLE 24 REQUIREMENTS. USE PLUG LOAD CONTROLLER FROM LIGHTING PLANS.

### KEY MAP

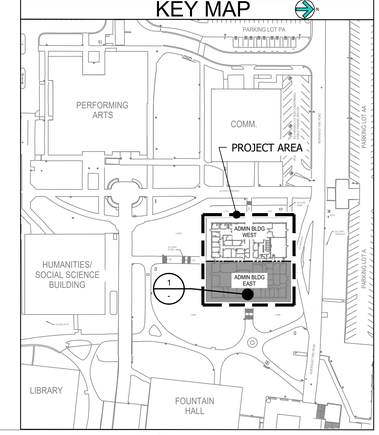


DIVISION OF THE STATE ARCHITECT

AMADOR WHITTLE
ARCHITECTS, INC.
28328 AGOURA ROAD, SUITE 203
AGOURA HILLS, CA 91301
(805) 530-3938 , (818) 874-0071

Ventura County Community College

PROJECT TITLE

# MOORPARK COLLEGE ADMINISTRATION BUILDING RENOVATION

7075 CAMPUS ROAD
MOORPARK, CA 91320

CONSULTANT
LUCCI & ASSOCIATES INC.
CONSULTING ELECTRICAL ENGINEERS
3251 CORTE MALPASO, #511
CAMARILLO, CA 93012-8094
(805) 389-6520 FAX (805) 389-6519

**LUCCI & ASSOCIATES, INC.** reserve their commonlaw copyright and other property rights in these plans. These plans and drawings are not to be reproduced, changed, or copied in any form or manner whatsoever without first obtaining the expressed written permission and consent of LUCCI & ASSOC. INC nor are they to be assigned to any third party without obtaining said written permission and consent.

STAMPS/SEALS




12/08/2023 - DSA RESUBMITTAL

1 ADDENDUM 1, 03-13-2025

2

3

SHEET TITLE:

ADMINISTRATION BUILDING POWER PLAN - EAST

| | | | |
|---|---|---|---|
| PROJECT NO.: | 21-MPC-040 | PROJECT ARCH.: | |
| DRAWN: | LK/DS | CHECKED: | |

SHEET NUMBER:

# E402

6/04/2024 UPDATE

DATE: 12/08/23 SHEET: ___ OF ___

IF THIS SHEET IS NOT 30" X 42", IT IS NOT FULL SIZE, SCALE ACCORDINGLY
L.A.I.# 21-375

Copyright Lucci and Associates Consulting Electrical Engineers. Deviations from this drawing will not be made without their expressed written permission.

DRAFTER: CM03 DRAWING FILENAME: 21-375E402 PATHNAME: G:\21\375\ELS\Sheets TIME: 3:46 pm DATE: 14 March 2025

Drafter:CM03 Paper Size: 12.0
Plot Date: 14 March 2025 15:46:03
Plot By: Doug Sloan
Xref G:\21\375\ELS\xref\21-375TB.dwg
Xref G:\21\375\ELS\xref\21-375E402-Base.dwg
G:\21\375\ELS\Sheets\21-375E402.dwg

Drafter: CM03: G:\21\375\ELS\Sheets\21-375E402.dwg; DATE: DEC 08, 2023 TIME: 10:21 AM

**SEE 33/S022 FOR RESTRAINTS/BRACES FOR ALL CONDITIONS**

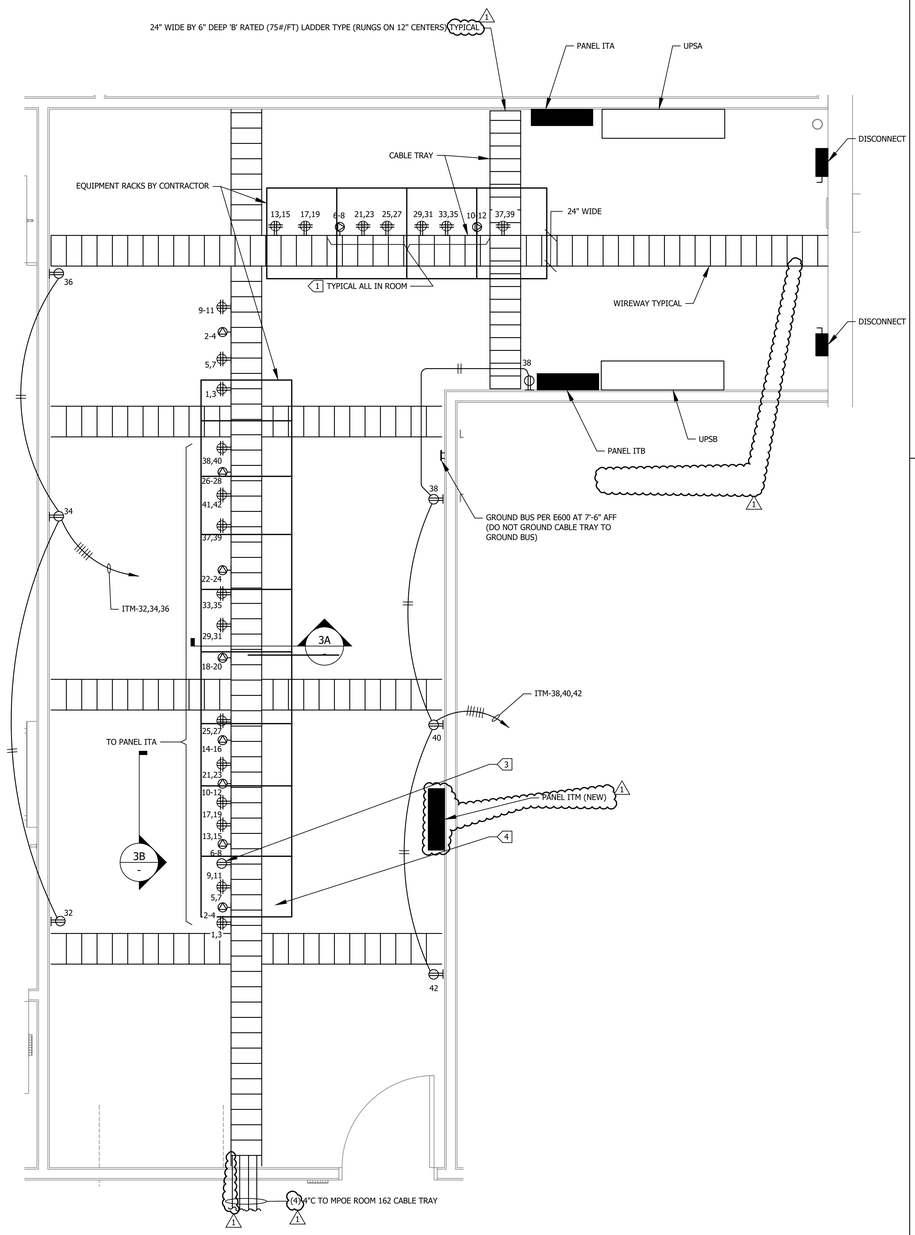


1/2" - 1'-0"
0 1' 2' 4'

TEL. / I.T. ROOM (154) 2
SCALE: 1/2"=1'-0" - E410 -

N

**DIAG. BRACING PER 33E/S022 @ 12" O.C. EACH SIDE (LONGITUDINAL AND TRANSVERSE BRACING) AND CHANGES IN DIRECTION**

**SEE 33/S022 FOR SUPPORTS AND SEISMIC BRACING**

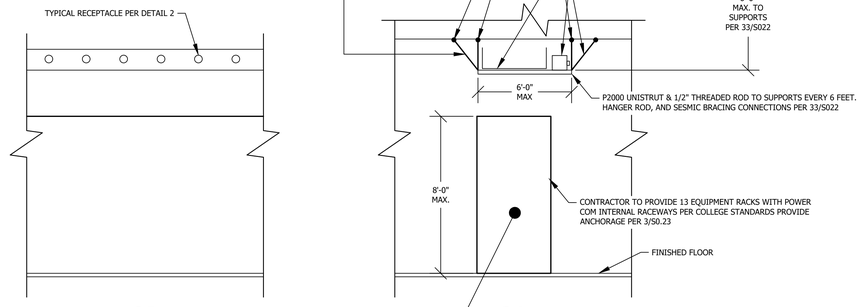


**3B** **3A**

UNITS 400 LBS OR LESS, W/CENTER OF GRAVITY AT 4' HIGH OR LESS, DON'T REQUIRE STRUCTURAL CALCULATIONS FOR ANCHORAGE, MANUFACTURERS ANCHORAGE REQUIREMENTS ARE SUFFICIENT

CABLE TRAY 3
SCALE: NONE - E410 -

**SEE STRUCTURAL CALCULATIONS PAGE B-21 AND DETAIL 33/S022 BRACING ADDED.**

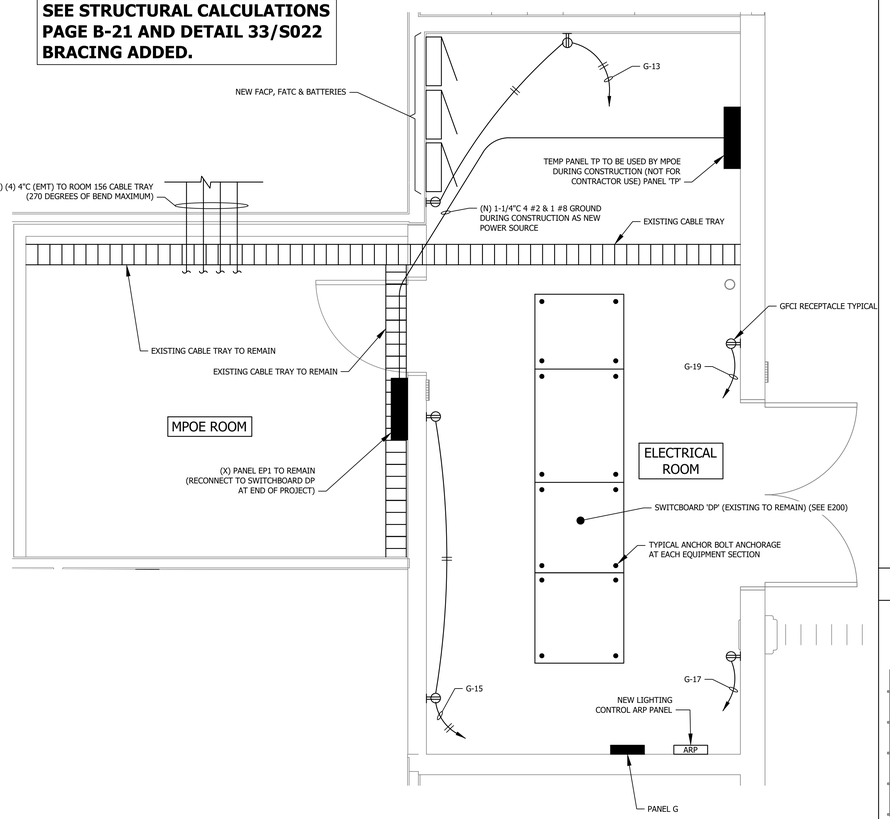


1/2" - 1'-0"
0 1' 2' 4'

MPOE AND ELECTRICAL ROOM (162 & 163) 1
SCALE: 1/2"=1'-0" - E410 -

N

## SHEET NOTES:

1. CONTRACTOR SHALL FIELD VERIFY LOCATION & REQUIREMENTS OF ALL DEVICES REQUIRING ELECTRICAL CONNECTION PRIOR TO BID PROPOSAL, ROUGH-IN AND FINISH.
2. CONTRACTOR SHALL, IN ROUTING ALL CIRCUITS, INCREASE CONDUCTOR & CONDUIT SIZE TO ALLOW FOR VOLTAGE DROP SHOULD THE CONTRACTOR EXCEED ROUTING INDICATED ON DRAWING. ENGINEER OF RECORD MUST BE NOTIFIED PRIOR TO ANY DEVIATIONS FROM APPROVED PLAN CHECK (PERMIT SET) DRAWINGS.
3. COORDINATE WORK WITH OTHER TRADES. OBTAIN ALL DRAWINGS THAT WILL REQUIRE COORDINATION AND PROVIDE ALL ELECTRICAL CONNECTIONS, DEVICES, AND WIRING REQUIRED WHETHER SHOWN ON ELECTRICAL DRAWINGS OR NOT.
4. CONTRACTOR SHALL FURNISH AND INSTALL PULL BOXES AS REQUIRED TO INSTALL CONDUCTORS PER CONDUCTOR MANUFACTURERS RECOMMENDATIONS, PER THE NATIONAL ELECTRICAL CODE AND PER LOCAL AUTHORITIES HAVING JURISDICTION.
5. 3/4" CONDUIT MINIMUM U.O.N.
6. PROVIDE CODE SIZE EQUIPMENT GROUNDING CONDUCTORS IN ALL OCCUPIED CONDUITS.
7. ALL DEVICES WITH IG SUBSCRIPT, ARE ISOLATED GROUND RECEPTACLES WITH SEPARATE IG CONDUCTOR TO PANELBOARD.
8. PROVIDE CONTROLS FOR MECHANICAL EQUIPMENT PER MECHANICAL DOCUMENTS. VERIFY LOCATION AND REQUIREMENTS OF MECHANICAL EQUIPMENT ON MECHANICAL DOCUMENTS.
9. VERIFY LOCATION OF ALL DEVICES ON ARCHITECTURAL PLANS.
10. VERIFY THE EXACT ROUTING OF ALL EXPOSED CONDUIT WITH OWNER PRIOR TO INSTALLATION.
11. GROUND CABLE TRAY WITH #8 AWG & HOME RUN TO - 'DP' GROUND
12. EXISTING EQUIPMENT UNDER 400LBS MAX WEIGHT SHOULD HAVE A MINIMUM OF ONE ANCHOR EA. CORNER VERIFY IN FIELD OR PROVIDE ANCHORAGE TO (E) FRAMING PER SHEET S023

## KEY NOTES:

1. MOUNT AN 8" x 8" WIREWAY ADJACENT TO CABLE TRAY.
2. PROVIDED BY COLLEGE, CONTRACTOR INSTALLED & CONNECTED.
3. TYPICAL IG OUTLETS, 5-20R ORANGE, MOUNTED TO CABLE TRAY HOME RUN (3) RECEPTACLES TOGETHER IN 3/4"C - 6#10 & 3#10 GROUND TO PANEL IT, CIRCUIT AS NOTED ITA
4. TYPICAL L6 - 30 RECEPTACLE MOUNTED TO CABLE TRAY (LABEL CIRCUIT #) HOME RUN 3/4"C - 3#10 & 1#10 GROUND TO PANEL ITA CIRCUITS AS NOTED
5. TYPICAL IG OUTLETS, 5-20R ORANGE, MOUNTED TO CABLE TRAY HOME RUN (3) RECEPTACLES TOGETHER IN 3/4"C - 6#10 & 3#10 GROUND TO PANEL IT, CIRCUIT AS NOTED ITB
6. TYPICAL L6 - 30 RECEPTACLE MOUNTED TO CABLE TRAY (LABEL CIRCUIT #) HOME RUN 3/4"C - 3#10 & 1#10 GROUND TO PANEL ITB CIRCUITS AS NOTED

FOR EXISTING ELECTRICAL EQUIPMENT (ALL UNDER 400 LBS), ANCHOR BOLTS SHALL BE VERIFIED IN FIELD AT EA. CORNER OR PROVIDED NEW. SEE NEW SHEET NOTE 12.

KEY MAP

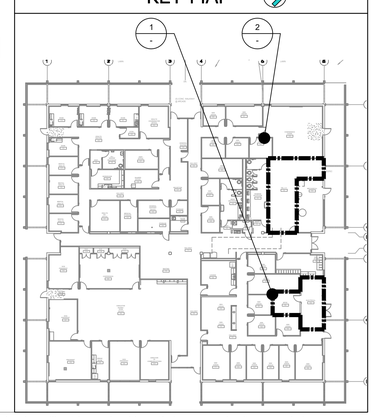


DIVISION OF THE STATE ARCHITECT


AMADOR WHITTLE
ARCHITECTS, INC.
28328 AGOURA ROAD, SUITE 203
AGOURA HILLS, CA 91301
(805) 530-3938 , (818) 874-0071


Ventura County Community College

PROJECT TITLE
**MOORPARK COLLEGE ADMINISTRATION BUILDING RENOVATION**

7075 CAMPUS ROAD
MOORPARK, CA 91320


CONSULTANT
LUCCI & ASSOCIATES INC.
CONSULTING ELECTRICAL ENGINEERS
3251 CORTE MALPASO, #511
CAMARILLO, CA 93012-8094
(805) 389-6520 FAX (805) 389-6519



**LUCCI & ASSOCIATES, INC.** reserve their commonlaw copyright and other property rights in these plans. These plans and drawings are not to be reproduced, changed, or copied in any form or manner whatsoever without first obtaining the expressed written permission and consent of LUCCI & ASSOC. INC nor are they to be assigned to any third party without obtaining said written permission and consent.


STAMPS/SEALS




12/08/2023 - DSA RESUBMITTAL

1 ADDENDUM 1, 03-13-2025

SHEET TITLE:
ENLARGED TEL./I.T. AND ELECTRICAL ROOMS (154, 162, & 163)

PROJECT NO.: 21-MPC-040 | PROJECT MGR.:
DRAWN: LK/DS | CHECKED:
SHEET NUMBER:

**E410**

6/04/2024 UPDATE

DATE: 12/08/23 | SHEET: ____ OF ____

IF THIS SHEET IS NOT 30" X 42", IT IS NOT FULL SIZE, SCALE ACCORDINGLY
L.A.I.# 21-375


Copyright Lucci and Associates Consulting Electrical Engineers. Deviations from this drawing will not be made without their expressed written permission.



DRAFTER: CM03 DRAWING FILENAME: 21-375E410 PATHNAME: G:\21\375\ELI\Sheets DATE: 14 March 2025 TIME: 3:46 pm

Drafter:CM03 Paper Size: 12.0
Date: 14 March 2025 Time(hr): 15:46:10
Plot By: LUCCI & ASSOCIATES
Xref: G:\21\375\ELI\Xref\21-375TB.dwg
Xref: G:\21\375\ELI\Xref\21-375E410.dwg
Xref: G:\21\375\ELI\Xref\Shared\SHEET2023-10-13X14.dwg

Drafter:CM03; G:\21\375\ELI\Sheets\21-375E410.dwg; DATE: MAR 14, 2025 TIME: 10:55 AM

# ELECTRICAL SCHEDULE FOR MECHANICAL EQUIPMENT (EXTERIOR EQUIPMENT SHALL BE NEMA 3R)

| TAG # | DESCRIPTION | H.P. | FLA | MAX OCP | VOLTAGE | PHASE | NEMA STARTER SIZE | DISCONNECT | RECOMMENDED FUSE SIZE/TYPE * | REMARKS | PANEL/CIRCUIT NO. | FEEDER |
|---|---|---|---|---|---|---|---|---|---|---|---|---|
| AC 1 | PACKAGED ROOF TOP AC-1(EAST) | | 149 | 175 | 208 | 3 | . | 200A/3P | 175A FRN-RK | WITH SMOKE DUCT DETECTOR | DB-12 | 2"C - 3 # 3/0 & 1#6 GND (EMT) COPPER |
| AC 2 | PACKAGED ROOF TOP AC-2 (WEST) | | 149 | 175 | 208 | 3 | | 200A/3P | 175A FRN-RK | WITH SMOKE DUCT DETECTOR | DB-13 | 2"C - 3 # 3/0 & 1#6 GND (EMT) COPPER |
| CP 1 | CONDENSATE PUMP | | 1.5 AMPS 93 WATTS | 15 | 208 | 1 | | <4> | | | M-24 - 26 | 3/4"C - 2#12 & 1#12 & 1#12 GND |
| DF 1 | DRINKING FOUNTAIN | | 1.0 AMP | 15 | 120 | 1 | | <3> | | | SEE E401 | 3/4"C - 2#12 & 1#12 & 1#12 GND |
| EF 1 | EXHAUST FAN 1 (EMS CONTROL) | | 2 | 15 | 120 | 1 | | <4> | | | M-1 | 3/4"C - 2#12 & 1#12 & 1#12 GND |
| EF 2 | EXHAUST FAN 2 (MOTION SENSOR TIME DELAY) | | .3 | 15 | 120 | 1 | | <4> | | | M-3 | 3/4"C - 2#12 & 1#12 & 1#12 GND |
| EF 3 | EXHAUST FAN 3 (LINE VOLTAGE T-STAT) | | 2 | 15 | 120 | 1 | | <5> | | | M-5 | 3/4"C - 2#12 & 1#12 & 1#12 GND |
| HP 1 | HEAT PUMP | | 173 | 250 | 208 | 3 | | 400A/3P | 225A FRN-RK | | DB-11 | 2"C - 3 # 250MCM & 1#4 GND (EMT) COPPER |
| L 1 | LAVATORY | | 2 AMPS | 15 | 120 | 1 | | <5> | | | AS NOTED ON E401 | 3/4"C - 2#12 & 1#12 & 1#12 GND |
| P 1 | PUMP 1 | .5 | 4.6 | 15 | 208 | 1 | 1 | 15A/2P | 8A | CONTACTOR CONTROLLED | M-9-11 | 3/4"C - 2#12 & 1#12 & 1#12 GND |
| P 2 | PUMP 2 | 1.5 | 5.0 | 15 | 208 | 3 | VFD | 15A/3P | | | M-13-15 | 3/4"C - 3#12 & 1#12 & 1#12 GND |
| RP 1 | RECIRCULATION PUMP | | 180 WATTS | | 120 | 1 | 00 | <4> | | CONTACTOR CONTROLLED | M-22 | 3/4"C - 2#12 & 1#12 & 1#12 GND |
| SD 1 | SMOKE DETECTOR (DUCT DETECTOR) | | | | 120 | 1 | | | | | G-6 | 3/4"C - 2#12 & 1#12 & 1#12 GND |
| SS 1A | SPLIT SYSTEM 1A FAN COIL (COM ROOM) | | 2.5 | 15 | 208 | 3 | | 15A/3P | | | ITM-2-4-6 | 3/4"C - 3#12 & 1#12 & 1#12 GND |
| SS 1B | SPLIT SYSTEM 1B (ROOF) COMPRESSOR (COM ROOM) | | 45.5 | 60 | 208 | 3 | | 60A/3P | | | ITM-1-3-5 | 1"C - 3#6 & 1#10 GND |
| SS 2A | SPLIT SYSTEM 2A FAN COIL (COM ROOM) | | 2.5 | 15 | 208 | 3 | | 15A/3P | | | ITM-8-10-12 | 3/4"C - 3#12 & 1#12 & 1#12 GND |
| SS 2B | SPLIT SYSTEM 2B (ROOF) COMPRESSOR (COM ROOM) | | 45.5 | 60 | 208 | 3 | | 60A/3P | | | ITM-7-9-11 | 1"C - 3#6 & 1#10 GND |
| SS 3A | SPLIT SYSTEM 3A (ROOF) COMPRESSOR ('IT' ROOM) | | 13 | 20 | 208 | 1 | | 20A/2P | | | ITM-13-15 | 3/4"C - 2#12 & 1#12 & 1#12 GND |
| SS 3B | SPLIT SYSTEM 3B FED FROM '3A' ('IT' ROOM) | | | | | | | | | OUTDOOR UNIT POWERS INDOOR UNIT | ITM-13-15 | PER MFG (3/4"C - 2#12 & 1#12 & 1#12 GND) |
| SS 4A | SPLIT SYSTEM 4A (ROOF) ('IT' ROOM) | | 13 | 20 | 208 | 1 | | 20A/2P | | | ITM-17-19 | 3/4"C - 2#12 & 1#12 & 1#12 GND |
| SS 4B | SPLIT SYSTEM 4B FED FROM '4A' ('IT' ROOM) | | | | | | | | | OUTDOOR UNIT POWERS INDOOR UNIT | ITM-17-19 | PER MFG (3/4"C - 2#12 & 1#12 & 1#12 GND) |
| WH 1 | WATER HEATER ('IT' ROOM) | | 30 AMPS 4500 WATTS | | 208/240 | 1 | 30A/2P | 30A/2P | | CONTACTOR CONTROLLED | M-2-4 | 3/4"C - 3#10 & 1#10 GND |

* ALL FUSES BY BUSSMANN AND SHALL BE SIZED PER MANUFACTURERS RECOMMENDATION.

## SHEET NOTES:

1. FIELD VERIFY MECHANICAL EQUIPMENT LOCATIONS.
2. SEE ELECTRICAL SCHEDULE FOR MECHANICAL EQUIPMENT FOR ELECTRICAL REQUIREMENTS.
3. ALL WORK SHALL BE COORDINATED WITH OTHER TRADES.
4. THE LOCATION OF ALL ROOF PENETRATIONS SHALL BE COORDINATED WITH THE ARCHITECTURAL, MECHANICAL, AND STRUCTURAL DRAWINGS.
5. PROVIDE ROOF JACKS AND PROPERLY SEAL ALL ROOF PENETRATIONS TO A LEAK FREE CONDITION.
6. THE FINAL CONNECTIONS TO EQUIPMENT SHALL BE LIQUIDTIGHT FLEXIBLE METAL CONDUIT. INSTALL WITH ENOUGH SLACK TO PRECLUDE VIBRATION TRANSMISSION. SUPPORT SHALL BE PER N.E.C. ARTICLE 351-8
7. PROVIDE WEATHERPROOF AND EXTERIOR RATED DEVICES IN ALL EXTERIOR AREAS.
8. PROVIDE ALL DEVICES AS REQUIRED ON MECHANICAL CONTRACTOR SHOP DRAWINGS AND APPROVED SUBMITTALS.
9. NO CONDUIT/FEEDER SHALL BE PERMITTED ON THE ROOF WITH CRIPPLES,ALL FEEDERS SHALL BE RUN BENEATH THE ROOF.
10. ALL DISCONNECTS SHALL BE MOUNTED ON UNISTRUT ON AH UNIT.
11. CONTRACTOR SHALL VERIFY LOCATION & REQUIREMENTS OF ALL ELECTRICAL DEVICES PRIOR TO BID, ROUGH-IN & INSTALLATION.
12. CONTRACTOR SHALL, IN ROUTING ALL CIRCUITS, INCREASE CONDUCTOR & CONDUIT SIZE TO ALLOW FOR VOLTAGE DROP SHOULD THE CONTRACTOR EXCEED ROUTING INDICATED ON DRAWING. ENGINEER OF RECORD MUST BE NOTIFIED PRIOR TO ANY DEVIATIONS FROM APPROVED PLAN CHECK (PERMIT SET) DRAWINGS.
13. PROVIDE DISCONNECT OR STARTER WITH A SPARE SET OF FUSES SHALL BE CONTRACTOR PROVIDED.

## KEY NOTES:

<1> FOR FEEDER AND DISCONNECT INFORMATION SEE ELECTRICAL SCHEDULE FOR MECHANICAL EQUIPMENT THIS SHEET.

<2> PROVIDE 3/4"C & CONTROLS PER MECHANICAL.

<3> W.P. GFCI. RECEPTACLE.

<4> MOTOR RATED SWITCH.

<5> 15A, 120V, GFCI RECEPTACLE

<1> PROVIDE 3/4"C - 2 #12 & 1 #12 GROUND CIRCUIT M-42 TO MECHANICAL ACCESS CONTROLS

SEE M6.0 FOR MECHANICAL CONTROL REQUIREMENTS

MECHANICAL EQUIPMENT ELECTRICAL SCHEDULE
SCALE: NONE

1 - E420


DIVISION OF THE STATE ARCHITECT

AMADOR WHITTLE
ARCHITECTS, INC.
28328 AGOURA ROAD, SUITE 203
AGOURA HILLS, CA 91301
(805) 530-3938 , (818) 874-0071


Ventura County Community College

PROJECT TITLE
**MOORPARK COLLEGE ADMINISTRATION BUILDING RENOVATION**

7075 CAMPUS ROAD
MOORPARK, CA 91320


CONSULTANT
LUCCI & ASSOCIATES INC.
CONSULTING ELECTRICAL ENGINEERS
3251 CORTE MALPASO, #511
CAMARILLO, CA 93012-8094
(805) 389-6520 FAX (805) 389-6519



**LUCCI & ASSOCIATES, INC.** reserve their commonlaw copyright and other property rights in these plans. These plans and drawings are not to be reproduced, changed, or copied in any form or manner whatsoever without first obtaining the expressed written permission and consent of LUCCI & ASSOC. INC nor are they to be assigned to any third party without obtaining said written permission and consent.


STAMPS/SEALS

REGISTERED PROFESSIONAL ENGINEER
KENNETH W. LUCCI, JR.
No. E13794
Exp. 08/30/2026
ELECTRICAL
STATE OF CALIFORNIA

12/08/2023 - DSA RESUBMITTAL

1 ADDENDUM 1, 03-13-2025

SHEET TITLE:
MECHANICAL EQUIPMENT ELECTRICAL SCHEDULE

PROJECT NO.: 21-MPC-040 | PROJECT ARCH.:
DRAWN: LK/DS | CHECKED:

SHEET NUMBER:
**E420**

6/04/2024 UPDATE

DATE: 12/08/23 | SHEET: ___ OF ___

IF THIS SHEET IS NOT 30" X 42", IT IS NOT FULL SIZE, SCALE ACCORDINGLY
L.A.I.# 21-375


Copyright Lucci and Associates Consulting Electrical Engineers. Deviations from this drawing will not be made without their expressed written permission.



DRAFTER: CM03 DRAWING FILENAME: 21-375E420 PATHNAME: G:\21\375\EL\Sheets TIME: 3:46 pm DATE: 14 March 2025

Drafter:CM03 Paper Size: 12.0 Plot Date: 3/14/2025 3:19:24 PM Plot By: CM03 Plot Scale: 1.00 ' per inch Plot Path: W:\EF\G\21\375\EL\Sheets\21-375E420.dwg

Drafter: CM03: G:\21\375\EL\Sheets\21-375E420.dwg; DATE: DEC 06, 2023 TIME: 9:14 AM




3/16" = 1'-0"
0 1' 4' 8' 12'

## ADMINISTRATION BUILDING MECHANICAL AND PLUMBING ELECTRICAL PLAN - WEST

1 / E421

SCALE: 3/16"=1'-0"

N

SHEET NOTES:

1. CONTRACTOR SHALL VERIFY LOCATION & REQUIREMENTS OF ALL DEVICES REQUIRING ELECTRICAL CONNECTION PRIOR TO BID PROPOSAL, ROUGH-IN AND FINISH.
2. CONTRACTOR SHALL, IN ROUTING ALL CIRCUITS, INCREASE CONDUCTOR & CONDUIT SIZE TO ALLOW FOR VOLTAGE DROP SHOULD THE CONTRACTOR EXCEED ROUTING INDICATED ON DRAWING. ENGINEER OF RECORD MUST BE NOTIFIED PRIOR TO ANY DEVIATIONS FROM APPROVED PLAN CHECK (PERMIT SET) DRAWINGS.
3. COORDINATE WORK WITH OTHER TRADES. OBTAIN ALL DRAWINGS THAT WILL REQUIRE COORDINATION AND PROVIDE ALL ELECTRICAL CONNECTIONS, DEVICES, AND WIRING REQUIRED WHETHER SHOWN ON ELECTRICAL DRAWINGS OR NOT.
4. CONTRACTOR SHALL FURNISH AND INSTALL PULL BOXES AS REQUIRED TO INSTALL CONDUCTORS PER CONDUCTOR MANUFACTURERS RECOMMENDATIONS, PER THE NATIONAL ELECTRICAL CODE AND PER LOCAL AUTHORITIES HAVING JURISDICTION.
5. 3/4" CONDUIT MINIMUM U.O.N.
6. PROVIDE CODE SIZE EQUIPMENT GROUNDING CONDUCTORS IN ALL OCCUPIED CONDUITS.
7. ALL DEVICES WITH IG SUBSCRIPT, ARE ISOLATED GROUND RECEPTACLES WITH SEPARATE IG CONDUCTOR TO PANELBOARD.
8. PROVIDE CONTROLS FOR MECHANICAL EQUIPMENT PER MECHANICAL DOCUMENTS. VERIFY LOCATION AND REQUIREMENTS OF MECHANICAL EQUIPMENT ON MECHANICAL DOCUMENTS.
9. VERIFY LOCATION OF ALL DEVICES ON ARCHITECTURAL PLANS.
10. VERIFY THE EXACT ROUTING OF ALL EXPOSED CONDUIT WITH OWNER PRIOR TO INSTALLATION.

KEY NOTES:

1. SEE E420 FOR FEEDER/CIRCUIT INFORMATION.
2. HOME RUN M-6
3. HOME RUN M-8
4. HOME RUN M-10
5. STAINLESS STEEL COVERED BOX WITH TAMPER PROOF SCREWS MOUNTED UNDER COUNTER.
6. ITM-41

KEY MAP

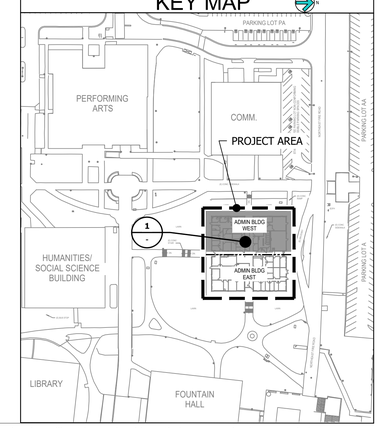



DIVISION OF THE STATE ARCHITECT

AMADOR WHITTLE ARCHITECTS, INC.
28328 AGOURA ROAD, SUITE 203
AGOURA HILLS, CA 91301
(805) 530-3938 , (818) 874-0071


Ventura County Community College

PROJECT TITLE

# MOORPARK COLLEGE ADMINISTRATION BUILDING RENOVATION

7075 CAMPUS ROAD
MOORPARK, CA 91320


CONSULTANT
LUCCI & ASSOCIATES INC.
CONSULTING ELECTRICAL ENGINEERS
3251 CORTE MALPASO, #511
CAMARILLO, CA 93012-8094
(805) 389-6520 FAX (805) 389-6519



**LUCCI & ASSOCIATES, INC.** reserve their commonlaw copyright and other property rights in these plans. These plans and drawings are not to be reproduced, changed, or copied in any form or manner whatsoever without first obtaining the expressed written permission and consent of LUCCI & ASSOC. INC nor are they to be assigned to any third party without obtaining said written permission and consent.


STAMPS/SEALS

REGISTERED PROFESSIONAL ENGINEER KENNETH W. LUCCI No. E 13437 Exp. 08/30/2026 ELECTRICAL STATE OF CALIFORNIA

12/08/2023 - DSA RESUBMITTAL

1 ADDENDUM 1, 03-13-2025

SHEET TITLE:

# ADMINISTRATION BUILDING MECHANICAL AND PLUMBING ELECTRICAL PLAN - WEST

| | |
|---|---|
| PROJECT NO.: 21-MPC-040 | PROJECT ARCH.: |
| DRAWN: LK/DS | CHECKED: |

SHEET NUMBER:

# E421

6/04/2024 UPDATE

DATE: 12/08/23 SHEET: ____ OF ____

IF THIS SHEET IS NOT 30" X 42", IT IS NOT FULL SIZE, SCALE ACCORDINGLY

L.A.I.# 21-375


Copyright Lucci and Associates Consulting Electrical Engineers. Deviations from this drawing will not be made without their expressed written permission.


DRAFTER: CM03 DRAWING FILENAME: 21-375E421 PATHNAME: G:\21\375\ELS\Sheets TIME: 3:46 pm DATE: 14 March 2025

Drafter:CM03 Page Size: 22.0
Dwg: G:\21\375\ELS\Sheets\21-375E421.dwg
Rev by: XCEL 21 (Sheet(s): 21-375E421.dwg
Plotted: 14 MAR 2025 - 10:36AM
XREFS:G:\21\375\ELS\Sheets\21-375TB.dwg
G:\21\375\Arch\Sheets\21-375A1.dwg G:\21\375\Arch\Sheets\21-375A10-12-19A1A.dwg

Drafter: CM01: G:\21\375\ELS\Sheets\21-375E421.dwg: DATE: MAR 14, 2025 TIME: 10:36 AM

# DEVICE LEGEND

| SYMBOL | MODEL | MAKE | DESCRIPTION | CSFM # | MOUNTING |
|---|---|---|---|---|---|
| | 4CPU | EST | MAIN CPU EST4 | 7170-1657:0508 | . |
| FACP | 4-NET-TP | EST | TWISTED PAIR SFP NETWORK CONTROLLER | 7170-1657:0508 | . |
| | 3-SDDC2 | EST | SIGNATURE DUAL DRIVER CONTROLLER (LRM) | 7170-1657:0508 | . |
| | 3-MODCOM | EST | MODEM COMMUNICATOR AND DIALER | 7170-1657:0508 | . |
| | 4-FWAC1 | EST | FIREWALL IP CONNECTION | 7170-1657:0508 | . |
| | 4-LCDLE | EST | DISPLAY,MAIN LCD MODULE | 7170-1657:0508 | . |
| | 4-24L12S | EST | CNTRL DISPLAY,24 LED,12 SWITCH | 7170-1657:0508 | . |
| | 4-FIL | EST | BLANK FILLER | 7170-1657:0508 | . |
| | 4-AUDTELS | EST | AUDIO IO AND TELEPHONE RISER SOURCE MODULE | 7170-1657:0508 | . |
| | 4-MIC | EST | PAGING MICROPHONE | 7170-1657:0508 | . |
| | 3-ZA40 | EDWARDS | 40 WATT ZONED AMPLIFIER, CLASS B/A, 25 OR 70VRMS | 7170-1657:0508 | . |
| | 3-CAB14B | EST | BACK BOX /W 14 LRM SPACE W/O DOOR | 7170-1657:0508 | . |
| | 4-CAB24D | EST | DOOR ASSEMBLY FOR 3-CAB14 | 7170-1657:0508 | |
| | BCA-SSU005501 | EST | BATTERY CABINET - SPACE AGE MFG. | 7300-0553:0111 | 3-RCC-Z1R |
| | 4-PPS/M | EST | PRIMARY POWER SUPPLY 120V | 7300-1657-0519 | . |
| | BPS-10A | EST | BOOSTER POWER SUPPLY 120V | 7300-1657-0519 | . |
| | 12V65A | EST | 65 AH BATTERY | N/A | . |
| | 3-CHAS7 | EST | CHASSIS ASS'Y FOR 7 LRMS | 7170-1657:0508 | . |
| ANN | 4-2ANN | EST | ANNUNCIATOR,LCD | 7170-1657:0508 | . |
| | 4-NET-TP | EST | SFP CNTRL,2MBPS SHARED TX/RX | 7170-1657:0508 | . |
| | 4-2ANNMT | EST | ANNUNCIATOR BACKBOX,2 SP,BLK | 7170-1657:0508 | . |
| FATC | BPS10A | EST | -SIGNAL EXTENDER POWER SUPPLY | 7300-1657:0229 | -WALLBOX PROVIDED |
| | SLA1075 | POWER PATROL | -7.2 AH BATTERY X2 | N/A | -MOUNTS IN WALLBOX |
| SP XW Xcd | G4SVWF | EST | -SPEAKER/STROBE 15 CANDELA (W=WALL C=CEILING) | 7320-1657:0516 | -4"SQUARE BOX WITH SINGLE GANG RING |
| | G4SVWF | EST | -SPEAKER/STROBE 30 CANDELA (W=WALL C=CEILING) | 7320-1657:0516 | -4"SQUARE BOX WITH SINGLE GANG RING |
| | | | | | |
| | G4SVWF | EST | -SPEAKER/STROBE 75 CANDELA (W=WALL C=CEILING) | 7320-1657:0516 | -4"SQUARE BOX WITH SINGLE GANG RING |
| | G4SVWF | EST | -SPEAKER/STROBE 115 CANDELA (W=WALL C=CEILING) | 7320-1657:0516 | -4"SQUARE BOX WITH SINGLE GANG RING |
| SP 2W WP | WG4WF | EST | SPEAKER (EXTERIOR WITH W/P BACKBOX) | 7320-1657:0289 | WEATHER PROOF BOX INCLUDED |
| (smoke) | SIGA-OSD | EST | -SMOKE DETECTOR | 7272-1657:0511 | -MOUNTS TO SIGA-SB BASE |
| | SIGA-SB | EST | -BASE | 7300-1657:0120 | -4" SQ. BOX WITH 3" "O" RING |
| H | SIGA-HRD | EST | -HEAT DETECTOR | 7270-1657:0333 | -MOUNTS TO SIGA-SB |
| | BASE | EST | -BASE | 7300-1657:0120 | -4" SQ. BOX WITH 3" "O" RING |
| CC1 | SIGA-CC1S | EST | -SIGNAL MODULE - MONITOR | 7300-1657:0121 | -4" SQ. ELECTRICAL BOX 1-1/2" DEEP |
| AOM | SIGA-CR | EST | -ADDRESSABLE CONTROL RELAY | 7300-1657:0121 | -SINGLE GANG RING |
| | PAM-1 | AIRPRODUCTS | -MULTI VOLTAGE RELAY | 7300-1004:0101 | -SINGLE GANG RING |
| WTM | SIGA-WTM | EST | INPUT MODULE (WATER FLOW/TAMPER) | 7300-1657:0121 | |
| WM1 | SIGA-MM1 | EST | INPUT MODULE (MONITOR) | 7300-1657:0121 | |
| DD | SIGA-SD | EST | SMOKE DUCT DETECTOR | 3242-1657:0223 | |
| J | N/A | BY OTHERS | -JUNCTION BOX | N/A | |
| CO | SIGA-OSCD | EST | SMOKE & CO DETECTOR WITH SOUNDER BASE | 7275-1657:0513 | -SIGA-SB BASE 4SQ |

SEE E502
SEE E501
SEE E506

# SEQUENCE OF OPERATION

| DEVICE \ ACTION | THROUGHOUT BUILDING SOUND GENERAL ALARM | SOUND TROUBLE BUZZER | ACTIVATE ADDRESSABLE MODULE FOR MONITORING | ANNUNCIATE AT PANEL | TRANSMIT TROUBLE SIGNAL FOR ALL APPLICABLE COMPONENTS TO SUPERVISING STATION | TRANSMIT ALARM SIGNAL TO SUPERVISING STATION | ACTIVE REMOTE POWER SUPPLY PANEL (FCPS) | DROP HORN BELL, TONES, SPEAKERS & VISUAL ALARMS FROM F.A. SYSTEM | SHUT DOWN HVAC UNIT |
|---|---|---|---|---|---|---|---|---|---|
| INDICATING CIRCUIT FAILURE | | ● | | ● | | | | | |
| INITIATING CIRCUIT FAILURE | | ● | | ● | | | | | |
| AC / BATTERY FAILURE | | ● | | ● | | ● | | | |
| F.A. SYSTEM LOW BATTERY | | ● | | ● | | | | | |
| FLOW SWITCH | ● | | | ● | ● | ● | ● | ● | ● |
| TAMPER SWITCH | | ● | | ● | | ● | | | |
| SMOKE DETECTORS | ● | | | ● | | ● | ● | ● | ● |
| HEAT DETECTORS | ● | | | ● | | ● | ● | ● | ● |
| CARBON MONOXIDE DETECTOR | ● | | | ● | | ● | ● | ● | |
| DUCT DETECTORS | ● | | ● | ● | ● | ● | | ● | ● |
| ISOLATOR LINE TROUBLE | | ● | | ● | | | | | |
| EARTH GROUND FAULT | | ● | | | ● | | | | |
| ELECTRICAL ROOM SMOKE | ● | | ● | ● | | ● | ● | ● | ● |

## FIRE ALARM N.A.C. DEVICE NUMBERING KEY

SP1-5

- NUMBER OF DEVICE IN CIRCUIT OR.
- CIRCUIT NUMBER (NUMBERING STARTS AGAIN AT EACH "FCPS")
- NOTIFICATION APPLIANCE CIRCUIT TYPE (SP=SPEAKER, V=VISUAL)

## FIRE ALARM ADDRESSABLE DEVICE IDENTIFICATION KEY

1D-015 (IDENTIFICATION MATCHES ACTUAL LED DISPLAY IN "FACP" OR "ANN")

- 3-DIGIT NUMBER OF ADDRESSABLE DEVICE
- "D" DESIGNATED ADDRESSABLE "DEVICE". "M" DESIGNATED "MONITOR" MODULE.
- SLC LOOP NUMBER

# PROJECT NOTES

GENERAL NOTES

1. ALL WIRE SHALL BE IN CONDUIT PER CFC ARTICLE 907.
2. MANUAL PULL STATIONS TO BE MOUNTED AT 48 IN. ABOVE FLOOR SURFACE TO THE CENTER OF THE STATION. (DETAIL 1)
3. MOUNT AUDIO VISUAL 80 IN. ABOVE FINISHED FLOOR TO THE BOTTOM OF THE LIGHT OR 6" FROM BELOW CEILING WHICH EVER IS LOWEST. PER NFPA 72 CHAPTER 18, CFC 907.1.2.
4. MAINTAIN CFC WIRING COLOR CODES.
5. ALL WIRING TO BE AS CALLED FOR IN N.E.C. ARTICLE 760 & CFC 907.
6. IDENTIFY THE FIRE ALARM CIRCUIT AT THE ELECTRICAL PANEL IN RED, PROVIDE A BREAKER LOCK-ON DEVICE. CFC 907.6
7. DEVICE TYPES AND LOCATIONS ARE SHOWN AS CALLED FOR ON THE BID DOCUMENTS.

# CODE ANALYSIS

EXISTING ADMINISTRATION BUILDING

ALTERATIONS SHALL COMPLY WITH SFM ADOPTED SECTIONS OF CBC 2022, CHAPTER 35

A. OCCUPANCY TYPE : B - 2

B. CONSTRUCTION TYPE: V - B

C. NUMBER OF STORIES: ONE

D. ALLOWABLE BUILDING HEIGHT: 15'-0"

E. AREA ANALYSIS:

1. ACTUAL FLOOR AREA: 16,943 G.S.F. EXCLUDING ROOF OVERHANG
   5,258 G.S.F. INCLUDING ROOF OVERHANG
   22,201 G.S.F TOTAL

2. BASIC ALLOWABLE AREA: 9,000 S.F. (TABLE 506.2)

ALLOWABLE AREA INCREASES PER UBC 2022 SECTION 506.3.3 SEPARATION ON ALL SIDES. EXISTING ALLOWABLE AREA 6,750 S.F. PER TABLE NO. 5-C MAY BE INCREASED 75 PERCENT.

ALLOWABLE AREA = 15,570 S.F.

F. FIRE SPRINKLERS: NONE EXIST
UPGRADE PROVIDES SPRINKLERS ALLOWABLE AREA = 24,570 S.F.

# REQUIRED NOTES

THE FIRE ALARM SYSTEM SHALL CONFORM TO ARTICLE 760 OF THE CALIFORNIA ELECTRIC CODE.

INSTALLATION OF THE FIRE ALARM SYSTEM SHALL NOT BE STARTED UNTIL DETAILED PLANS AND SPECIFICATIONS. INCLUDING CALIFORNIA STATE FIRE MARSHAL LISTING NUMBERS FOR EACH COMPONENT OF THE SYSTEM HAVE BEEN APPROVED BY THE CALIFORNIA DEPT. OF THE STATE ARCHITECT'S FIRE MARSHAL.

UPON COMPLETION OF THE INSTALLATION OF THE FIRE ALARM SYSTEM A SATISFACTORY TEST OF THE SYSTEM SHALL BE MADE BY INSTALLATION TECHNICIAN PER CFC 901.2.1, PROVIDE STATEMENT OF COMPILATION WHEN WITNESSING FOR THE FINAL TEST BY IOR & LOCAL AHJ. IN THE PRESENCE OF THE LOCAL AHJ IOR SSS FIELD ENGINEER, OWNER AND ENGINEER OF RECORD.

A MINIMUM OF 48 HOURS NOTICE SHALL BE REQUIRED FOR ANY INSPECTION AND/OR TESTING.

ALL DEVICES OF THE FIRE ALARM SYSTEM SHALL BE APPROVED AND LISTED BY THE CALIFORNIA STATE FIRE MARSHAL.

A STAMPED SET OF APPROVED FIRE ALARM PLANS SHALL BE ON THE JOB SITE AND RETAINED ON SITE/PREMISES FOR 5 YEARS PER CFC 901.6.2 / TITLE 19 USED FOR INSTALLATION. ANY DEVIATION FROM APPROVED PLANS, INCLUDING THE SUBSTITUTION OF DEVICES SHALL BE APPROVED BY THE DSA FLS.

ANY DISCREPANCIES BETWEEN THE DRAWINGS AND THE CODE, OR RECOGNIZED STANDARDS SHALL BE BROUGHT TO THE ATTENTION OF THE INSPECTOR OF RECORD.

A CERTIFICATE OF COMPLIANCE SHALL BE PREPARED BY THE INSTALLER AND GIVEN TO THE FIRE MARSHAL UPON COMPLETION OF THE INSTALLATION.

COMPLETE THE NFPA 72 RECORD OF COMPLETION, TESTING ALL DEVICES AND APPLIANCES. PROVIDE A COPY OF THE COMPLETED RECORD OF COMPLETION TO THE OWNER (SCHOOL DISTRICT), ARCHITECT, LOCAL FIRE AUTHORITY AND DSA VIA THE PROJECT INSPECTOR.

## F.A. RACEWAY

MINIMUM CONDUIT SIZE SHALL BE 3/4" DIAMETER AND SHALL NOT EXCEED 40% FILL. ALL FA CONDUITS SHALL BE RED IN COLOR

## FIRE ALARM ZONE SCHEDULE

THE NEW FIRE ALARM SYSTEM IS A EST4 EDWARD ADDRESSABLE TYPE. EACH INITIATING DEVICE IS ANNUNCIATED AS A UNIQUE ADDRESS OR ZONE AT THE PANEL AND ANNUNCIATOR.

## SCOPE OF WORK

PROVIDE A NEW ADDRESSABLE FIRE ALARM SYSTEM FOR BUILDING, AUTOMATIC TYPE FOR COMPLETE BUILDING INCLUDING VOICE EVACUATION & CONNECT TO CAMPUS WIDE SYSTEM.

MONITOR MODULES SHALL BE INSTALLED WITHIN 36" OF MONITORED DEVICE.

SMOKE DETECTORS SHALL NOT BE INSTALLED WITHIN 36" OF SUPPLY HVAC REGISTERS.

ALL WALL PENETRATIONS MUST BE VERIFIED BY SPECIAL FIELD INSPECTORS SINCE STRUCTURE IS RISK CATAGORY III

# ABBREVIATIONS

| | | | |
|---|---|---|---|
| BP | BACKFLOW PREVENTER | FPL | FIRE-POWER LIMITED |
| CSFD | COMBINATION SMOKE / FIRE DAMPER | FPLP | FIRE-POWER LIMITED PLENUM |
| EOL | END-OF-LINE RESISTOR | FPLR | FIRE-POWER LIMITED RISER |
| ER | EXISTING DEVICE TO BE REMOVED | TP | TWISTED PAIR |
| ERN | EXISTING DEVICE TO BE REMOVED AND REPLACED WITH NEW | TSP | TWISTED SHIELDED PAIR |
| ERR | EXISTING DEVICE TO BE REMOVED AND REINSTALLED | THHN | "T" THERMOPLASTIC INSULATED CABLE "HH" MEANS THAT THE WIRE IS HEAT RESISTANT AND CAN WITHSTAND A HIGHER TEMPERATURE (UP TO 194° F) "N" NYLON COATING THAT COVERS WIRE INSULATION |
| EX | EXISTING DEVICE TO REMAIN | | |
| FACP | FIRE ALARM CONTROL PANEL | | |
| FATC | FIRE ALARM TERMINAL CABINET | THWN | "T" THERMOPLASTIC INSULATED CABLE "H" MEANS WIRE IS HEAT RESISTANT "W" MEANS WIRE IS APPROVED FOR DAMP/WET LOCATIONS "N" NYLON COATING THAT COVERS WIRE INSULATION |
| LRM | LOCAL RAIL MODULE | | |
| N | NEW DEVICE | | |
| PIV | POST INDICATOR VALVE | WP | WEATHERPROOF DEVICE |
| RR | EXISTING DEVICE TO BE REMOVED AND RELOCATED | | |

# WIRE LEGEND

| CALLOUT | USAGE | TYPE |
|---|---|---|
| A | ADDRESSABLE CIRCUIT | 2#18 FPLR (UNSHIELDED) TWISTED-PAIR, SOLID |
| | | |
| S | SPEAKER CIRCUIT | 2#12 FPLR (UNSHIELDED) TWISTED-PAIR, SOLID |
| U | UNDERGROUND CIRCUIT | 4#16 AERIAL CABLE DB FPL (UNSHIELDED) GEL FILLED |
| V | STROBE CIRCUIT | 2#14 THHN (UNSHIELDED) STRANDED |

CONDUIT WIRE FILL CHART

| CONDUIT SIZE INCHES | MAXIMUM CONDUCTORS #18 AWG | #16 AWG | #14 AWG |
|---|---|---|---|
| 1/2" | 19 | 15 | 13 |
| 3/4" | 34 | 26 | 24 |
| 1" | 55 | 43 | 39 |
| 1 1/4" | 97 | 76 | 69 |
| 1 1/2" | 132 | 104 | 94 |
| 2" | 216 | 169 | 154 |

* RECOMMENDATION FOR CONDUIT SIZE BY C.E.C

BOX SIZE VS. NUMBER OF WIRES PER C.E.C.

| J-BOXES | #14 | #12 |
|---|---|---|
| 3-1/4X1-1/2 OCTAGON | 5 | 4 |
| 3-1/2X1-1/2 OCTAGON | 5 | 5 |
| 4X1-1/2 OCTAGON | 8 | 7 |
| 4X1-1/8 OCTAGON | 11 | 10 |
| 4X4X1-1/2 | 11 | 10 |
| 4X4X2-1/8 | 15 | 14 |
| 4X2-1/8X1-1/2 | 3 | 3 |
| 4X2-1/8X1-7/8 | 5 | 4 |
| 4X2-1/2X2-1/2 | 5 | 5 |

MAXIMUM NUMBER OF CONDUCTORS IN ELECTRICAL METALLIC TUBING

| TYPE LETTERS | CONDUCTOR SIZE AWG/KCMIL | 3/4 | 1 | 1-1/4 | 1-1/2 | 2 | 2-1/2 | 3 | 3-1/2 | 4 |
|---|---|---|---|---|---|---|---|---|---|---|
| THHN THWN | 14 | 22 | 35 | 61 | 84 | 138 | 241 | 364 | 476 | 608 |
| | 12 | 16 | 26 | 45 | 61 | 101 | 176 | 266 | 347 | 443 |
| | 10 | 10 | 16 | 28 | 38 | 63 | 111 | 167 | 219 | 279 |
| | 8 | 6 | 9 | 16 | 16 | 36 | 64 | 96 | 126 | 161 |

| PERCENT AREA OF CONDUIT | | | | PERCENT REDUCTION PER - NUMBER 18AWG TWISTED SHIELDED PAIRS | | | | | | | |
|---|---|---|---|---|---|---|---|---|---|---|---|
| TRADE SIZE INCHES | INTERNAL DIAMETER INCHES | TOTAL AREA 100% SQ. IN. | OVER 2 WIRES 40% SQ. IN. | 1 | 2 | 3 | 4 | 5 | 6 | 7 | 8 |
| 3/4 | 0.824 | 0.533 | 0.213 | 19% | 38% | 57% | 76% | 95% | X | X | X |
| 1 | 1.049 | 0.864 | 0.346 | 12% | 24% | 36% | 48% | 6% | 72% | 84% | 96% |
| 1 1/4 | 1.380 | 1.496 | 0.598 | 7% | 14% | 21% | 28% | 35% | 42% | 49% | 56% |
| 1 1/2 | 1.610 | 2.036 | 0.814 | 5% | 10% | 15% | 20% | 25% | 30% | 35% | 40% |
| 2 | 2.067 | 3.356 | 1.342 | 3% | 3% | 9% | 12% | 15% | 18% | 21% | 24% |

# GENERAL NOTES

1. ALL WIRING SHALL BE INSTALLED IN ACCORDANCE WITH C.E.C. ARTICLE 760, POWER LIMITED FIRE PROTECTIVE SIGNALING CIRCUITS.
2. UPON COMPLETION OF THE INSTALLATION OF THE FIRE ALARM SYSTEM, A SATISFACTORY TEST WITHIN THE SCOPE OF WORK AS SHOWN ON THIS SUBMITTAL PACKAGE SHALL BE MADE IN THE PRESENCE OF THE FIRE MARSHAL.
3. A STAMPED SET OF APPROVED FIRE ALARM PLANS SHALL BE ON THE JOB SITE AND USED FOR INSTALLATION. ANY DEVIATION FROM APPROVED PLANS, INCLUDING THE SUBSTITUTION OF DEVICES, SHALL BE APPROVED BY THE FIRE MARSHAL.
4. ANY DISCREPANCIES BETWEEN THE DRAWINGS AND THE CODE OR RECOGNIZED STANDARDS SHALL BE BROUGHT TO THE ATTENTION OF THE INSPECTOR OF RECORD.
5. ALL DEVICES OF THE FIRE ALARM SYSTEM SHALL BE APPROVED AND LISTED BY THE CALIFORNIA STATE FIRE MARSHAL.
6. FIRE ALARM DEVICES SHALL BE INSTALLED PER N.F.P.A. 72.
7. ALL WIRING, INITIATING DEVICES AND ANNUNCIATOR PANEL SHALL BE SUPERVISED TO THE PRINCIPAL POINT OF ANNUNCIATION.
8. WIRING SHALL NOT BE LOOPED THROUGH DEVICES; WIRE MUST BE CUT AT EACH DEVICE.
9. ALL WIRING TO BE INSTALLED IN CONDUIT. CONDUIT SIZE TO BE 3/4" MINIMUM UNLESS OTHERWISE NOTED.
10. ALL CONDUCTORS ARE COPPER.
11. SYSTEM IS POWER LIMITED.
12. POINT AND COMMON ANNUNCIATION AND T-TAPPING PROHIBITED.
13. ALL DEVICES IN THE ALARM SYSTEM SHALL BE COMPATIBLE AND INSTALLED TO MANUFACTURERS SPECIFICATIONS.
14. TO ENSURE THAT AUDIBLE PUBLIC MODE SIGNALS ARE CLEARLY HEARD, UNLESS OTHERWISE PERMITTED BY 18.4.3.2 THROUGH 18.4.3.5, THEY SHALL HAVE A SOUND LEVEL AT LEAST 15 dB ABOVE THE AVERAGE AMBIENT SOUND LEVEL OR 5 dB ABOVE THE MAXIMUM SOUND LEVEL HAVING A DURATION OF AT LEAST 60 SECONDS, WHICHEVER IS GREATER, MEASURED 5 FT (1.5 m) ABOVE THE FLOOR IN THE AREA REQUIRED TO BE SERVED BY THE SYSTEM USING THE A-WEIGHTED SCALE (dBA) PER NFPA 72 SECTION 18.4.3.1.
15. AREAS HAVING MORE THAN TWO STROBES IN THE FIELD OF VIEW SHALL BE SYNCHRONIZED 2016 NFPA 72 18.5.5.4.2
16. SMOKE DETECTOR AND HEAT DETECTOR LOCATIONS ARE BASED ON SMOOTH CEILING WITH MAXIMUM HEIGHT OF 10 FEET UNLESS OTHERWISE NOTED.
17. WALL-MOUNTED STROBES SHALL HAVE THEIR BOTTOMS NOT LESS THAN 80 INCHES ABOVE FINISHED FLOOR AND NO GREATER THAN 96 INCHES ABOVE FINISHED FLOOR.
18. THE RECORD OF COMPLETION DOCUMENTATION SHALL BE COMPLETED BY THE INSTALLING CONTRACTOR AND SUBMITTED TO THE CONCLUSION OF THE JOB. THE RECORD OF COMPLETION DOCUMENTATION SHALL BE PERMITTED TO BE PART OF THE WRITTEN STATEMENT REQUIRED IN 7.5.2 AND PART OF THE DOCUMENTS THAT SUPPORT THE REQUIREMENTS OF 7.5.8. WHEN MORE THAN ONE CONTRACTOR HAS BEEN RESPONSIBLE FOR THE INSTALLATION, EACH CONTRACTOR SHALL COMPLETE THE PORTIONS OF THE DOCUMENTATION FOR WHICH THAT CONTRACTOR HAS RESPONSIBILITY. 2016 NFPA 72 7.5.6.2.
19. FIRE ALARM SIGNAL SHALL MEET ANSI S3.41, AUDIBLE EMERGENCY EVACUATION SIGNAL (TEMPORAL PATTERN).
20. POWER FOR THE FIRE ALARM CONTROL PANEL IS TO BE PROVIDED BY A DEDICATED CIRCUIT BREAKER. INDICATE LOCATION OF THIS BREAKER AT THE FACP. BREAKER TO BE RED AND LABELED "FIRE ALARM CONTROL DISCONNECT".
21. THE LOCATION OF THE BRANCH CIRCUIT DISCONNECTING MEANS SHALL BE PERMANENTLY IDENTIFIED AT THE CONTROL UNIT. SYSTEM CIRCUIT DISCONNECTING MEANS SHALL BE PERMANENTLY IDENTIFIED AS TO ITS PURPOSE IN ACCORDANCE WITH THE FOLLOWING: (1) "FIRE ALARM" FOR FIRE ALARM SYSTEMS; (2) "EMERGENCY COMMUNICATIONS" FOR EMERGENCY COMMUNICATIONS SYSTEMS; (3) "FIRE ALARM/ECS" FOR COMBINATION FIRE ALARM AND EMERGENCY COMMUNICATIONS SYSTEMS. FOR FIRE ALARM AND/OR SIGNALING SYSTEMS, THE CIRCUIT DISCONNECTING MEANS SHALL HAVE A RED MARKING. THE RED MARKING SHALL NOT DAMAGE THE OVERCURRENT PROTECTIVE DEVICES OR OBSCURE THE MANUFACTURER'S MARKINGS. THE CIRCUIT DISCONNECTING MEANS SHALL BE ACCESSIBLE ONLY TO AUTHORIZED PERSONNEL. 2016 NFPA 72 10.6.5.1-5.

## Caulk-Type Materials

| Fire Tests | UL System | Test Criteria | Description |
|---|---|---|---|
| Floor/Wall Assembly | C-AJ-1020[a] | F-Rating 3 Hr. / T-Rating 1 Hr. | see below |

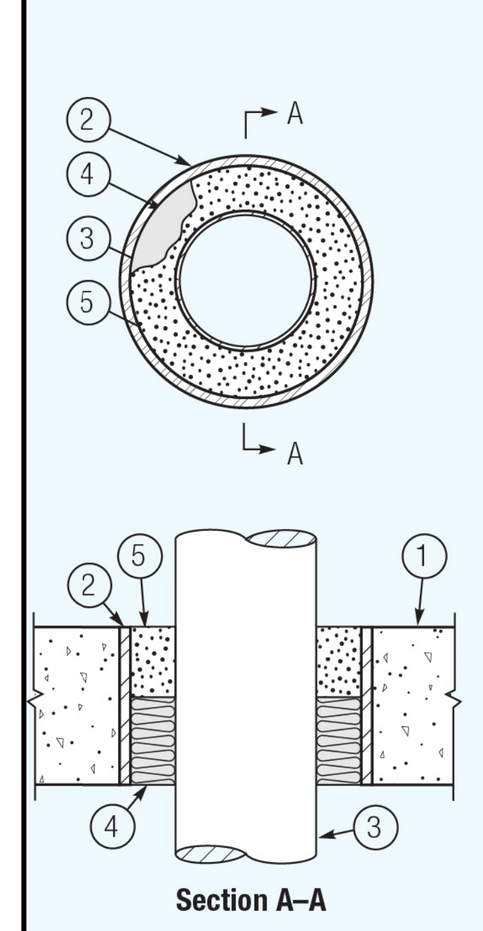


1. Concrete floor or wall assembly, minimum 4-1/2″ thickness floor/minimum 6-1/2″ wall.
2. Steel sleeve (optional).
3. Metallic pipe:
   A Steel pipe: 6″ diameter (or smaller) Schedule 10 (or heavier) steel pipe.
   B Conduit: 4″ diameter (or smaller) electrical metallic tubing (EMT) or 6″ diameter rigid steel conduit.
4. Forming material: Mineral wool insulation[b] (minimum 4.0 pcf) firmly packed into the opening as a permanent form; see table below for minimum required thickness.
5. Type AS or Type SS: Minimum thickness of sealant as specified in the table below, applied within the opening, flush with the top surface of the floor or both surfaces of the wall.

| Maximum Pipe Diameter (%) | Maximum EMT | Annular Space (in.) | Forming Material Thickness (in.) | Minimum Sealant Thickness (in.) | F Rating (hours) | T Rating (hours) |
|---|---|---|---|---|---|---|
| 1-1/2 | — | 3/8 to 2-1/8 | 2-1/2 | 2 | 3 | 1 |
| 6 | 4 | 3/8 to 3/4 | 3-1/2 | 1 | 3 | 0 |
| 6 | 4 | 3/8 to 1 | 2-1/2 | 2 | 3 | 0 |

## Mortar-Type Materials

| Fire Tests | UL System | Test Criteria | Description |
|---|---|---|---|
| Wall Assembly | W-L-1027[a] | F-Rating 2 Hr. / T-Rating 0 Hr. | see below |

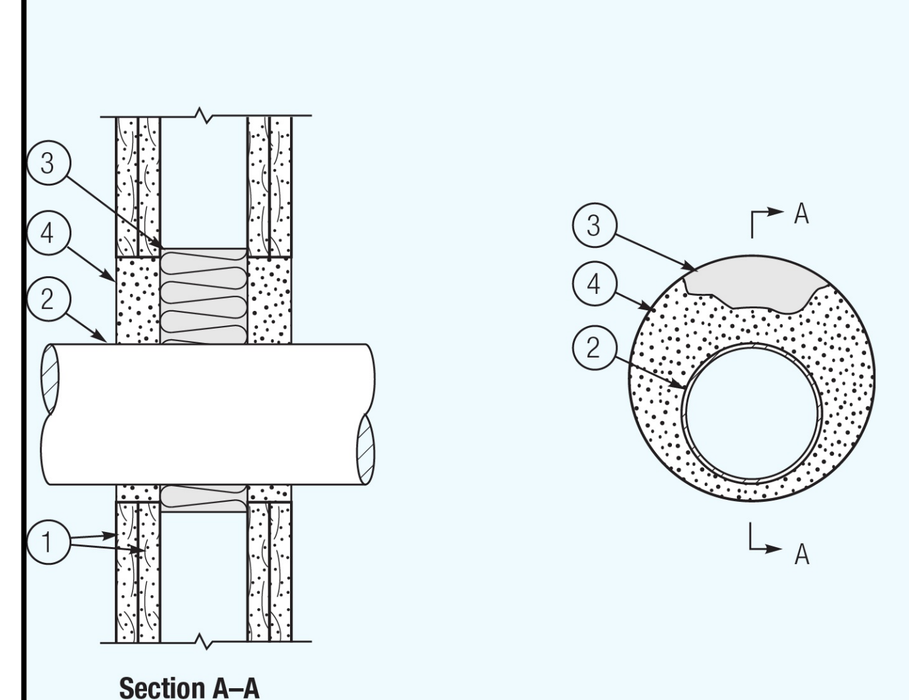


1. Gypsum wallboard/stud wall assembly.
2. Metallic pipe:
   A Conduit: 4″ diameter (or smaller) electrical metallic tubing (EMT) or steel conduit. A minimum 1/4″ to maximum 2-1/4″ annular space between pipe and periphery of opening is required.
   B Copper tubing: 6″ diameter (or smaller) Type M (or heavier) copper tubing. A minimum 1″ to maximum 1-5/8″ annular space between pipe and periphery of opening is required.
   C Steel pipe: 4″ diameter (or smaller) schedule 10 (or heavier) steel pipe. A minimum 1/4″ to maximum 2-1/4″ annular space between pipe and periphery of opening is required.
   D Steel pipe: 6″ diameter (or smaller) schedule 10 (or heavier) steel pipe. A minimum 1″ to maximum 1-5/8″ annular space between pipe and periphery of opening is required.
3. Forming material: Minimum 2-1/2″ thick mineral wool insulation[b] (minimum 3.5 pcf) firmly packed into the opening as a permanent form.
4. Type FC: Minimum 1″ thick compound applied within opening, flush with both surfaces of the wall.

## Mortar-Type Materials

| Fire Tests | UL System | Test Criteria | Description |
|---|---|---|---|
| Floor/Wall Assembly | C-AJ-1081 (Pipe) | F-Rating 3 Hr. / T-Rating 0 Hr. | see below |

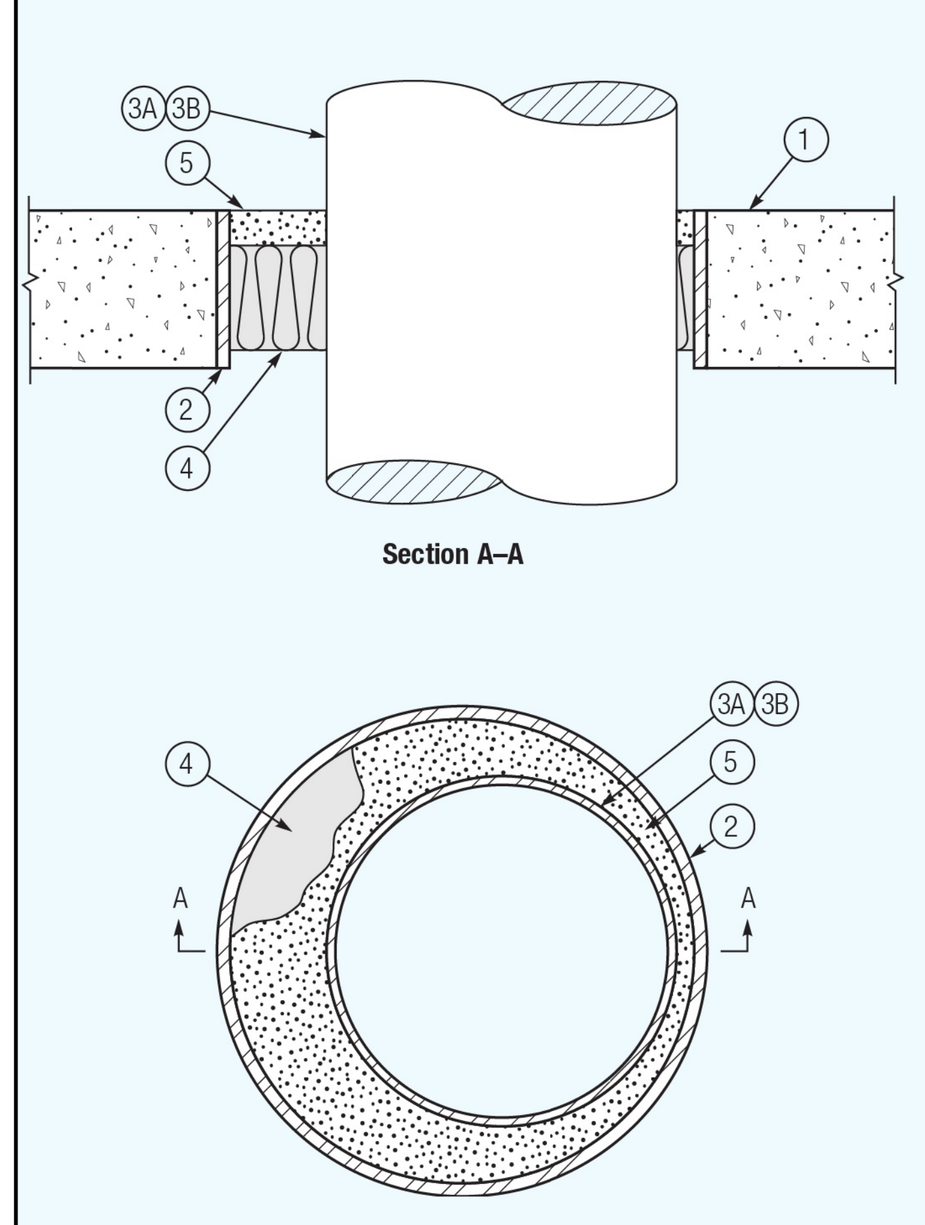


1. Concrete floor or wall assembly, minimum 4-1/2″ thickness floor, minimum 6-1/2″ wall. The annular space range shall be minimum 1/4″ to maximum 4″ for 10″ diameter steel pipe, 4″ or 6″ diameter conduit, 4″ diameter copper tubing, or cables. The annular space range shall be minimum 1/4″ to maximum 1-15/16″ for 24″ diameter steel pipe, and minimum 1/4″ to maximum 1-13/16″ for 6″ diameter copper tubing or copper pipe.
2. Steel sleeve (optional).
3. Metallic pipe:
   A Steel pipe: 24″ diameter (or smaller) schedule 10 (or heavier) steel pipe.
   B Conduit: 4″ diameter (or smaller) electrical metallic tubing (EMT) or 6″ steel conduit.
   C Copper tubing: 6″ diameter (or smaller) Type M (or heavier) copper tubing.
   D Cables: 100-pair 24 AWG with PVC insulation minimum 10 to 40% maximum fill.
4. Forming material: Minimum 3″ of mineral wool insulation[b] (minimum 3.5 pcf) firmly packed into the opening as a permanent form.
5. Type FC or RFC: Minimum 1″ thick compound applied within the opening, flush with the top surface of the floor or both surfaces of the wall.

C-AJ-3045 (Cable)[a]

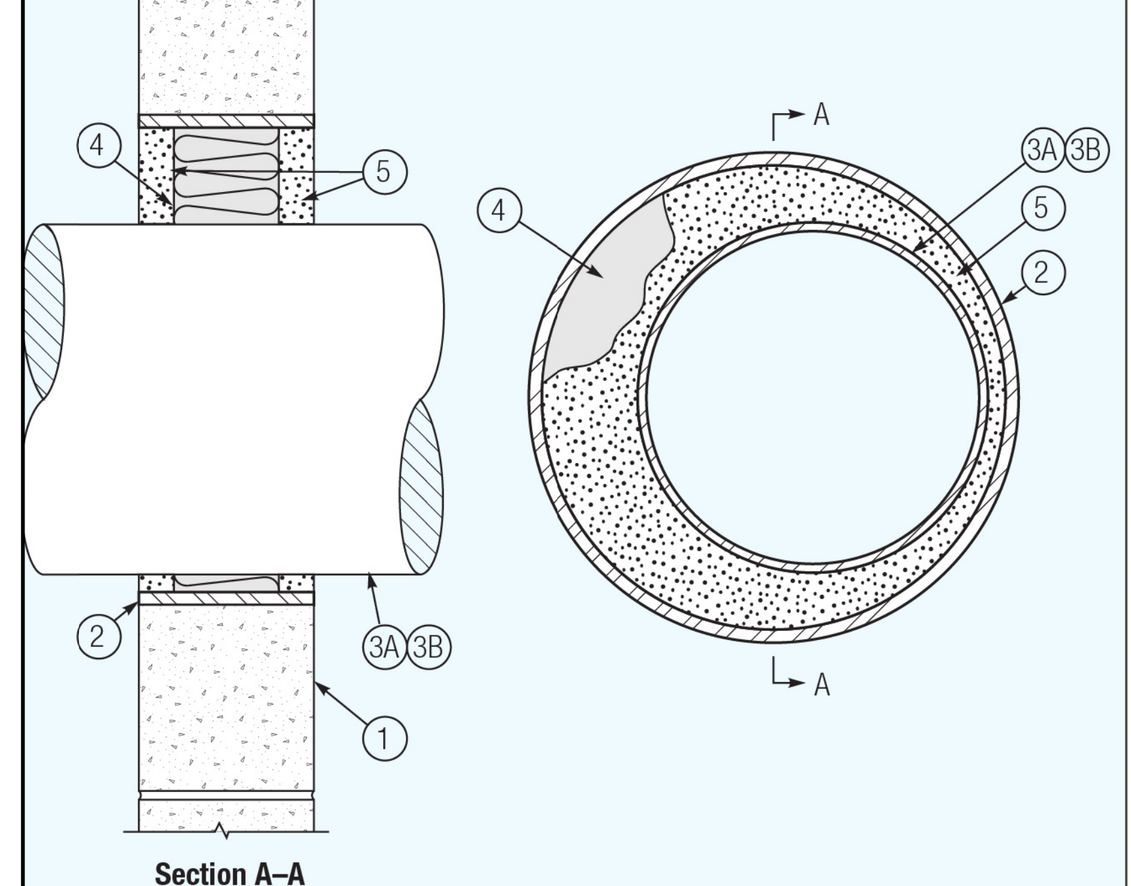


## Mortar-Type Materials

| Fire Tests | UL System | Test Criteria | Description |
|---|---|---|---|
| Wall Assembly | W-L-1063[a] | F-Rating 2 Hr. / T-Rating 0 Hr. | see below |

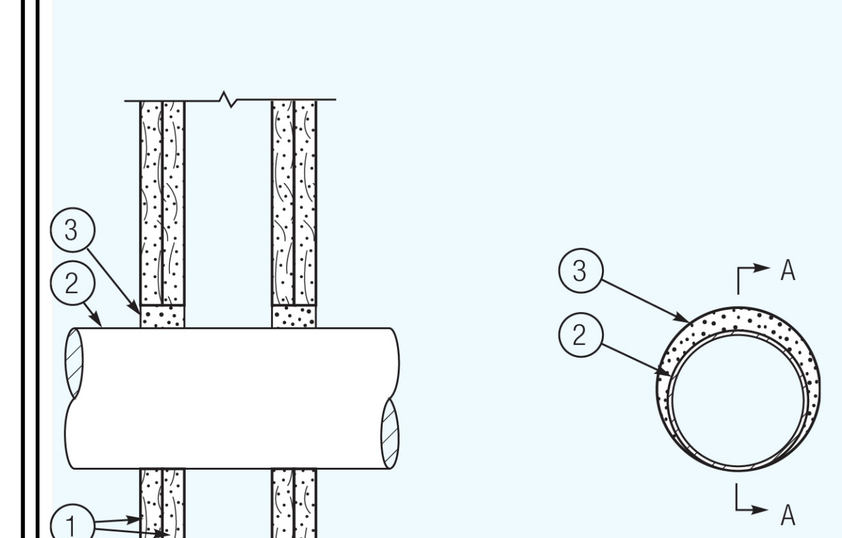

1. Gypsum wallboard/stud wall assembly. The annular space range shall be minimum 1/4″ to maximum 1-5/8″.
2. Metallic pipe:
   A Steel pipe: 3-1/2″ diameter (or smaller) Schedule 10 (or heavier) steel pipe.
   B Conduit: 3-1/2″ diameter (or smaller) electrical metallic tubing (EMT) or steel conduit.
   C Copper tubing: 4″ diameter (or smaller) Type M (or heavier) copper tubing.
3. Type FC or RFC: Minimum 1″ thick compound applied within opening, flush with both surfaces of the wall.

DIVISION OF THE STATE ARCHITECT

AMADOR WHITTLE ARCHITECTS, INC.
28328 AGOURA ROAD, SUITE 203
AGOURA HILLS, CA 91301
(805) 530-3938 , (818) 874-0071

Ventura County Community College

PROJECT TITLE
**MOORPARK COLLEGE ADMINISTRATION BUILDING RENOVATION**

7075 CAMPUS ROAD
MOORPARK, CA 91320

CONSULTANT
LUCCI & ASSOCIATES INC.
CONSULTING ELECTRICAL ENGINEERS
3251 CORTE MALPASO, #511
CAMARILLO, CA 93012-8094
(805) 389-6520 FAX (805) 389-6519

LUCCI & ASSOCIATES, INC. reserve their commonlaw copyright and other property rights in these plans. These plans and drawings are not to be reproduced, changed, or copied in any form or manner whatsoever without first obtaining the expressed written permission and consent of LUCCI & ASSOC. INC nor are they to be assigned to any third party without obtaining said written permission and consent.

STAMPS/SEALS
REGISTERED PROFESSIONAL ENGINEER KENNETH W. LUCCI No. E8340 Exp. 09/30/2026 ELECTRICAL STATE OF CALIFORNIA

12/08/2023 - DSA RESUBMITTAL
1 ADDENDUM 1, 03-13-2025

SHEET TITLE:
FIRE ALARM GENERAL NOTES AND DEVICES LEGEND

PROJECT NO.: 21-MPC-040 PROJECT ARCH:
DRAWN: LK/DS CHECKED:
SHEET NUMBER: **E500**
6/04/2024 UPDATE
DATE: 12/08/23 SHEET: ___ OF ___
IF THIS SHEET IS NOT 30" X 42", IT IS NOT FULL SIZE, SCALE ACCORDINGLY
L.A.I.# 21-375

Copyright Lucci and Associates Consulting Electrical Engineers. Deviations from this drawing will not be made without their expressed written permission.

TIME: 3:46 pm DATE: 14 March 2025 PATHNAME: G:\21\375\EL\Sheets DRAWING FILENAME: 21-375E500 DRAFTER: CM03
Drafter:CM03 Paper Size: 12,9 Drawing:G:\21\375\EL\Sheets\21-375E500.dwg Mar 14, 2025, 3:46pm Attached XREFS: XREF:G:\21\375\EL\Xrefs\21-375TB.dwg
Drafter: CM01: G:\21\375\EL\Sheets\21-375E500.dwg; DATE: MAR 14, 2025 TIME: 10:17 AM

DRAFTER: CM03     DRAWING FILENAME: 21-375E501     PATHNAME: G:\21\375\EL\Sheets     DATE: 14 March 2025     TIME: 3:47 pm

## BATTERY SIZING CALCULATIONS

Project Name: Moorpark College Admin    Panel Name: FACP
oject Number:    Area Served: Entire Admin Bldg

Requirement for standby current (hours): 24 hrs.
Requirement for alarm current (minutes): 15 min.
Spare Battery Capacity (percentage): 20% %

Design Supervision Current = 49.82 amp-hr
Design Alarm Current = 2.61 amp-hr
Additional Capacity Current = 10.49 amp-hr
Battery AH requirement = 62.93 amp-hr

Battery Provided   QUANTITY 2 OF TV-50A or 100 amp hour total

PANEL EQUIPMENT

| Quantity | Device | Standby (ma) Current | Alarm (ma) Current | TOTAL (ma) Standby Current | TOTAL (ma) Alarm Current |
|---|---|---|---|---|---|
| 1 | 4-CPU/3-PPS/4-PPS | 230 | 230 | 230 | 230 |
| 1 | 4-AUDTELS | 85 | 101 | 85 | 101 |
| 1 | 4-ANNCPU | 145 | 145 | 145 | 145 |
| 1 | 4-ANNAUDTEL | 98 | 98 | 98 | 98 |
| 1 | 4-CPUGRPH | 123 | 123 | 123 | 123 |
| 1 | 4-PPS/M configured as BPS | 45 | 45 | 45 | 45 |
| | 4-PPS/M configured as BBC | 45 | 45 | 0 | 0 |
| 1 | 3-BPS/M(230) | 50 | 50 | 50 | 50 |
| | 3-BBC/M | 70 | 70 | 0 | 0 |
| 1 | 4-24L series | 4 | 10 | 4 | 10 |
| | 3-xx series | 2 | 2 | 0 | 0 |
| | 3-LDSM | 5 | 5 | 0 | 0 |
| 1 | 4-LCD | 50 | 110 | 50 | 110 |
| | 4-LCDAUDTEL | 50 | 110 | 0 | 0 |
| | 4-3LCD | 40 | 93 | 0 | 0 |
| | 4-NET-TP(-HC) | 32 | 32 | 0 | 0 |
| 1 | 4-NET-CAT/4-FWAL-CAT | 27 | 27 | 27 | 27 |
| 1 | 4-NET-SM/4-FWAL-SM | 35 | 35 | 35 | 35 |
| | 4-NET-MM/4-FWAL-MM | 35 | 35 | 0 | 0 |
| | 4-NET-SMH/4-FWAL-SMH | 35 | 35 | 0 | 0 |
| | 4-NET-SMU/4-FWAL-SMU | 35 | 35 | 0 | 0 |
| | 4-NET-SMD/4-FWAL-SMD | 35 | 35 | 0 | 0 |
| | 4-FWAL-1/2/3/4 | 130 | 130 | 0 | 0 |
| | 4-ASDCPU | 130 | 130 | 0 | 0 |
| | 4-USBHUB | 44 | 44 | 0 | 0 |
| 1 | 4-NET-AD | 130 | 130 | 130 | 130 |
| 1 | 4-NET-XT | 110 | 110 | 110 | 110 |
| 1 | 4-MIC | 8 | 38 | 8 | 38 |
| | 4-FT | 9 | 168 | 0 | 0 |
| | 4-COMREL | 0 | 8 | 0 | 0 |
| 4 | 3-SSDC1, 3-SSDC2 | 144 | 204 | 576 | 816 |
| | 3-SDDC1, 3-SDDC2 | 264 | 336 | 0 | 0 |
| 1 | 3-IDC8/4 | 48 | 408 | 48 | 408 |
| | 3-OPS | 53 | 147 | 0 | 0 |
| 1 | 3-MODCOM | 60 | 95 | 60 | 95 |
| | 3-MODCOMP | 60 | 95 | 0 | 0 |
| | CDR-3 | 60 | 100 | 0 | 0 |
| | 3-ZA20B/A | 62 | 1120 | 0 | 0 |
| 1 | 3-ZA40B/A | 62 | 2480 | 62 | 2480 |
| | 3-ZA95 | 85 | 5540 | 0 | 0 |
| 1 | 3-BPS/M | 50 | 50 | 50 | 50 |
| | 3-BBC/M | 70 | 70 | 0 | 0 |
| | | | | | |
| | Remote Annunciators | | | 0 | 0 |
| | 4-ANNCPU | 145 | 145 | 0 | 0 |
| 1 | 4-LCDANN | 50 | 110 | 50 | 110 |
| | 4-24L | 4 | 10 | 0 | 0 |
| | 4-24L12S | 4 | 10 | 0 | 0 |
| | 4-24L18S | 4 | 10 | 0 | 0 |
| | 4-24L24S | 4 | 10 | 0 | 0 |
| | 4-2ANN | 195 | 255 | 0 | 0 |
| | 4-4ANN | 145 | 145 | 0 | 0 |
| | 4-6ANN | 145 | 145 | 0 | 0 |
| | 4-8ANN | 145 | 145 | 0 | 0 |
| | 4-16ANN | 145 | 145 | 0 | 0 |
| | 4-24ANN | 145 | 145 | 0 | 0 |
| | 4-ANNAUDTEL | 98 | 98 | 0 | 0 |
| 1 | 4-LCDAUDTELANN | 50 | 110 | 50 | 110 |
| 1 | 4-MIC | 8 | 38 | 8 | 38 |
| | 4-FT | 9 | 168 | 0 | 0 |
| | 4-NET-CAT | 27 | 27 | 0 | 0 |
| 1 | 4-NET-TP | 32 | 32 | 32 | 32 |
| | 4-NET-TP-HC | 32 | 32 | 0 | 0 |
| | 4-NET-MM | 35 | 35 | 0 | 0 |
| | 4-NET-SM | 35 | 35 | 0 | 0 |
| | 4-NET-SMD | 35 | 35 | 0 | 0 |
| | 4-NET-SMH | 35 | 35 | 0 | 0 |
| | 4-NET-SMU | 35 | 35 | 0 | 0 |
| | PANEL TOTALS | | | 2076 | 5391 |

FIELD EQUIPMENT

| Quantity | Device | Standby (ma) Current | Alarm (ma) Current | TOTAL (ma) Standby Current | TOTAL (ma) Alarm Current |
|---|---|---|---|---|---|
| 44 | Speaker Strobe 15cd G4SWF | | 55 | | 2420 |
| 28 | Speaker Strobe 30cd G4SWF | | 78 | | 2184 |
| 3 | Speaker Strobe 75cd G4SWF | | 153 | | 459 |
| | | | | | 0 |
| | | | | | 0 |
| | | | | | 0 |
| | | | | | |
| | | | | | |
| | FIELD TOTALS | | | 0 | 5063 |

| | Standby | Alarm |
|---|---|---|
| GRAND TOTALS (field & panel) | 2076 | 10454 |

Formula: [(A + B) x C] + [(D + E) x F] x G = Minimum Amp-Hour Battery Capacity

Where: A = Internal panel standby current (amps).
B = External device standby current (amps).
C = Duration panel must remain operational (hours).
D = Alarm current (amps).
E = External device alarm current (amps).
F = Duration panel must remain in alarm after standby period ends (hours).
G = Spare battery capacity (percentage).

1 (addendum delta)

## AMPLIFIER CALCULATIONS (2 / E501)

SCALE: NONE

## SCOPE OF WORK

PROVIDE A NEW ADDRESSABLE EVACUATION FIRE ALARM SYSTEM FOR SPRINKLERED BUILDING, AUTOMATIC TYPE COMPLETE BUILDING SYSTEM. A SPEAKER SYSTEM WILL BE EMPLOYED FOR VOICE NOTIFICATION. FA SYSTEM SHALL BE CONNECTED TO CAMPUS WIDE EDWARDS EST SYSTEM F.A. SYSTEM.

## FIRE ALARM ZONE SCHEDULE

THE NEW FIRE ALARM SYSTEM IS A EST4 EDWARD ADDRESSABLE TYPE. EACH INITIATING DEVICE IS ANNUNCIATED AS A UNIQUE ADDRESS OR ZONE AT THE PANEL AND ANNUNCIATOR.

## AMPLIFIER 1 SPEAKER CALCULATION

| LOCATION | SPEAKER SIRCUIT | QUANTITY OF SPEAKERS | LOAD PER SPEAKER | TOTAL WATTS PER CIRCUIT |
|---|---|---|---|---|
| ADMIN | SC | 8 | 2.00 WATTS | 16.0 |
| | | 66 | .25 WATTS | 18.5 |
| | | 3 | .5 WATTS | 1.5 |
| | | | TOTAL WATTS | 36.0 |
| | | | AMPLIFIER PROVIDED | 40 |
| | | | SPARE WATTAGE | 4 |

## WIRE LEGEND

| TYPE | CONDUCTORS | SIZE | TYPE CABLE | CIRCUIT DESCRIPTION | WIRE COLOR SCHEME | LISTING |
|---|---|---|---|---|---|---|
| A | 2 | #18AWG | FPL | ADDRESSABLE DEVICE CIRCUIT | RED (+), BLACK (-) | UL AQ224 1424/581 WEST PENN |
| 2A | 4 | #18AWG | FPL | ADDRESSABLE DEVICE LOOP | RED (+), BLACK (-), BLUE (+), BROWN (-) | UL AQ224 1424/581 WEST PENN |
| B | 2 | #12AWG | THHN | SPEAKER CIRCUIT (24V) | RED (+), BLACK (-) | UL 83 |
| C | 2 | #14AWG | THHN | STROBE CIRCUIT | YELLOW (+), BLUE (-) | UL 83 |

## VOLTAGE DROP CALCULATIONS - SPEAKER APPLIANCE CIRCUITS (24V CONDUITS)

| PANEL ID | CKT # | 1/4 WATT 0.017 QTY. | AMP | 1/2 WATT 0.034 QTY. | AMP | 1 WATT 0.068 QTY. | AMP | 2 WATT 0.132 QTY. | AMP | - 0.000 QTY. | AMP | - 0.000 QTY. | AMP | - 0.000 QTY. | AMP | - 0.000 QTY. | AMP | - 0.000 QTY. | AMP | (I) TOTAL CURRENT | x | LENGTH FT. | x | 21.6 | ÷ | CIR MILS 12awg | = | VOLTS DROPPED | ÷ | 24(V) | x | 100 | % VOLTAGE DROP |
|---|---|---|---|---|---|---|---|---|---|---|---|---|---|---|---|---|---|---|---|---|---|---|---|---|---|---|---|---|---|---|---|---|---|
| AMP | V1 | 18 | 0.306 | 3 | 0.102 | | 0.000 | 2 | 0.264 | | 0.000 | | 0.000 | | 0.000 | | 0.000 | | 0.000 | 0.672 | x | 225 | x | 21.6 | ÷ | 6530 | = | 0.500 | ÷ | 24 | x | 100 | 2.1 |
| AMP | V2 | 17 | 0.289 | | 0.000 | | 0.000 | 2 | 0.264 | | 0.000 | | 0.000 | | 0.000 | | 0.000 | | 0.000 | 0.553 | x | 260 | x | 21.6 | ÷ | 6530 | = | 0.476 | ÷ | 24 | x | 100 | 2.0 |
| AMP | V3 | 13 | 0.221 | | 0.000 | | 0.000 | 2 | 0.264 | | 0.000 | | 0.000 | | 0.000 | | 0.000 | | 0.000 | 0.485 | x | 245 | x | 21.6 | x | 6530 | = | 0.406 | ÷ | 24 | x | 100 | 1.7 |
| AMP | V4 | 18 | 0.306 | | 0.000 | | 0.000 | 2 | 0.264 | | 0.000 | | 0.000 | | 0.000 | | 0.000 | | 0.000 | 0.570 | x | 230 | x | 21.6 | x | 6530 | = | 0.408 | ÷ | 24 | x | 100 | 1.7 |

I x FEET x 21.6 = VOLTAGE DROPPED
C.M.
I = TOTAL CIRCUIT CURRENT
FEET = ONE WAY DISTANCE IN FEET MEASURED FROM SOURCE TO THE LAST DEVICE
21.6 = FORMULA CONSTANT
C.M. = CROSS SECTIONAL AREA OF CONDUCTOR IN CIRCULAR MILS. SEE CHART BELOW

| WIRE SIZE | WIRE RESISTANCE | CIR. MILS |
|---|---|---|
| AWG 12 | 1.59 PER 1000' | 6530 |
| AWG 14 | 2.52 PER 1000' | 4110 |
| AWG 16 | 4.02 PER 1000' | 2580 |
| AWG 18 | 6.39 PER 1000' | 1620 |

## VOLTAGE DROP CALCULATIONS - VISUAL APPLIANCE CIRCUITS

| PANEL ID | CKT # | 15cd STROBE 0.043 QTY. | AMP | 30cd STROBE 0.063 QTY. | AMP | 75cd STROBE 0.107 QTY. | AMP | 110cd STROBE 0.148 QTY. | AMP | 15cd STROBE 0.055 QTY. | AMP | 30cd STROBE 0.078 QTY. | AMP | 75cd STROBE 0.153 QTY. | AMP | 110cd STROBE 0.185 QTY. | AMP | 102cd STROBE 0.172 QTY. | AMP | (I) TOTAL CURRENT | x | LENGTH FT. | x | 21.6 | ÷ | CIR MILS 14awg | = | VOLTS DROPPED | ÷ | 24(V) | x | 100 | % VOLTAGE DROP |
|---|---|---|---|---|---|---|---|---|---|---|---|---|---|---|---|---|---|---|---|---|---|---|---|---|---|---|---|---|---|---|---|---|---|
| MOD1A | S1 | | 0.000 | | 0.000 | | 0.000 | | 0.000 | 17 | 0.935 | 2 | 0.156 | | 0.000 | | 0.000 | | 0.000 | 1.091 | x | 190 | x | 21.6 | ÷ | 4110 | = | 1.089 | ÷ | 24 | x | 100 | 4.5 |
| MOD1B | S2 | | 0.000 | | 0.000 | | 0.000 | | 0.000 | 14 | 0.770 | 9 | 0.702 | 1 | 0.153 | | 0.000 | | 0.000 | 0.935 | x | 169 | x | 21.6 | x | 4110 | = | 0.830 | ÷ | 24 | x | 100 | 3.5 |
| MOD1C | S3 | | 0.000 | | 0.000 | | 0.000 | | 0.000 | 2 | 0.110 | 9 | 0.702 | 2 | 0.306 | | 0.000 | | 0.000 | 1.118 | x | 187 | x | 21.6 | x | 4110 | = | 1.099 | ÷ | 24 | x | 100 | 4.6 |
| MOD1D | S4 | | 0.000 | | 0.000 | | 0.000 | | 0.000 | 11 | 0.605 | 8 | 0.624 | | 0.000 | | 0.000 | | 0.000 | 1.229 | x | 158 | x | 21.6 | ÷ | 4110 | = | 1.021 | ÷ | 24 | x | 100 | 4.3 |

I x FEET x 21.6 = VOLTAGE DROPPED
C.M.
I = TOTAL CIRCUIT CURRENT
FEET = ONE WAY DISTANCE IN FEET MEASURED FROM SOURCE TO THE LAST DEVICE
21.6 = FORMULA CONSTANT
C.M. = CROSS SECTIONAL AREA OF CONDUCTOR IN CIRCULAR MILS. SEE CHART BELOW

| WIRE SIZE | WIRE RESISTANCE | CIR. MILS |
|---|---|---|
| AWG 12 | 1.59 PER 1000' | 6530 |
| AWG 14 | 2.52 PER 1000' | 4110 |
| AWG 16 | 4.02 PER 1000' | 2580 |
| AWG 18 | 6.39 PER 1000' | 1620 |

EDWARDS United Technologies
LIFE SAFETY & INCIDENT MANAGEMENT

EDWARDS® Catalog ▶ Intelligent Initiating Devices

# Intelligent Heat Detectors

SIGA-HRD, SIGA-HFD



### Overview

The Signature Series smoke detectors bring advanced sensing technology to a practical design that increases efficiency, saves installation time, cuts costs, and extends property protection capabilities. Continuous self-diagnostics ensures reliability over the long-haul, while the latest thermister technology makes these detectors ideal wherever dependable heat detection is required.

**The SIGA-HRD** is an intelligent fixed temperature/rate-of-rise fire detector. It monitors the temperature of the surrounding air and analyzes the data from the sensor to determine whether to initiate an alarm. The rate-of-rise heat function quickly detects a fast, flaming fire. The fixed-temperature heat function detects fire when the air temperature near the detector exceeds the alarm point.

**The SIGA-HFD** is an intelligent fixed-temperature heat detector that contains a fixed-temperature heat sensor rated at 135 °F (57.2 °C). It does not have a rate-of-rise function. The heat sensor monitors the temperature of the air in its surroundings and the detector analyzes the data to determine when the air temperature near the detector exceeds the device's alarm point.

### Standard Features

*Note: Some features described here may not be supported by all control systems. Check your control panel's Installation and Operation Guide for details.*

- Next Generation Heat Sensing Technology
- 135 °F (57 °C) fixed temperature alarm point (HRD and HFD)
- 15 °F (9 °C) per minute rate-of-rise alarm point (HRD)
- Uses existing wiring
- Automatic device mapping
- Sensor Markings Provide Easy Testing Identification
- Up To 250 Total Signature Devices Per Loop
- Non-volatile memory
- Electronic addressing
- Bicolor (green/red) status LED
- Standard, relay, fault isolator, and audible mounting bases
- 50 foot (15.2 meter) spacing

### Application

The SIGA-HRD combination fixed temperature/rate-of-rise heat detector provides a 15 °F (9 °C) per minute rate-of-rise heat sensor for the detection of fast-developing fires, as well as a 135°F (57°C) fixed temperature sensor for slow building-fires. The SIGA-HFD fixed temperature detector provides a 135°F (57°C) fixed temperature sensor for slow building-fires.

### Compatibility

Signature Series heat detectors are compatible only with the Signature Loop Controller.

### Installation

Signature Series detectors mount to North American 1-gang boxes, 3-1/2 inch or 4 inch octagon boxes, and to 4 inch square electrical boxes 1-1/2 inches (38 mm) deep. They mount to European BESA and 1-gang boxes with 60.3 mm fixing centers. See mounting base installation and wiring for more information.

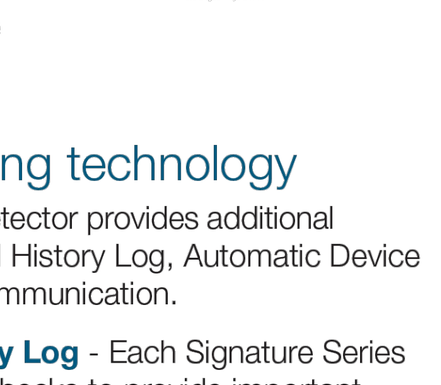


### Sensing and reporting technology

The microprocessor in each detector provides additional benefits – Self-diagnostics and History Log, Automatic Device Mapping, and Fast, Stable Communication.

**Self-diagnostics and History Log** - Each Signature Series detector constantly runs self-checks to provide important maintenance information. The results of the self-check are automatically updated and permanently stored in the detector's non-volatile memory.

**Automatic Device Mapping** - The loop controller learns where each device's serial number address is installed relative to other devices on the circuit. The mapping feature provides supervision of each device's installed location to prevent a detector from being reinstalled (after cleaning etc.) in a different location from where it was originally.

**Fast Stable Communication** - On-board intelligence means less information needs to be sent between the detector and the loop controller. Other than regular supervisory polling response, the detector only needs to communicate with the loop controller when it has something new to report.

### Accessories

**Detector mounting bases** have wiring terminals that are accessible from the "room-side" after mounting the base to the electrical box. The bases mount to North American 1-gang boxes and to 3½ inch or 4 inch octagon boxes, 1½ inches (38 mm) deep. They also mount to European BESA and 1-gang boxes with 60.3 mm fixing centers. The SIGA-SB4, SIGA-RB4, and SIGA-IB4 mount to North American 4 inch sq. electrical boxes in addition to the above boxes. They include the SIGA-TS4 Trim Skirt, which is used to cover the "mounting ears" on the base. The SIGA-AB4G mounts to a 4 inch square box only.

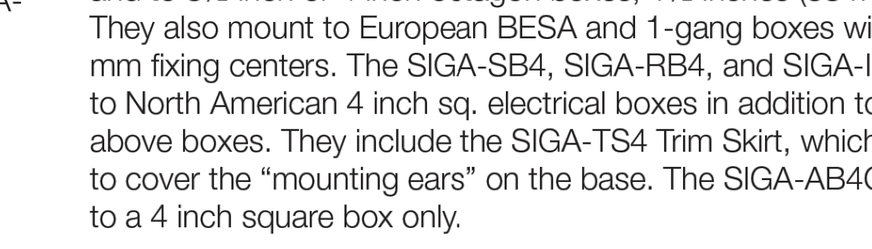


**Remote LED SIGA-LED** - The remote LED connects to the SIGA-SB or SIGA-SB4 Standard Base only. It features a North American size 1-gang plastic faceplate with a white finish and red alarm LED.

**SIGA-TS4 Trim Skirt** - Supplied with 4 inch bases, it can also be ordered separately to use with the other bases to help hide surface imperfections not covered by the smaller bases.

**Sounder Bases** - Signature Series sounder bases are designed for use where localized or group alarm signaling is required.

- **SIGA-AB4G** bases provide sounder capability to Signature Series to heat and smoke detectors. They are not intended for use with combination carbon monoxide detectors in Fire-plus-CO mode.
- **SIGA-AB4GT** bases provide sounder capability to Signature Series smoke and heat detectors, as well as carbon monoxide detectors when used with a SIGA-TCDR Temporal Pattern Generator.
- **SIGA-AB4G-LF** bases provide 520 Hz low frequency sounder capability to Signature Series smoke and heat detectors, as well as carbon monoxide detectors when used with a SIGA-TCDR Temporal Pattern Generator. The SIGA-AB4G-LF is suitable for applications requiring low frequency audible tones.

### Warnings & Cautions

- This detector does not operate without electrical power. As fires frequently cause power interruption, discuss further safeguards with the local fire protection specialist.
- This detector does not sense fires in areas where heat cannot reach the detector. Heat from fires in walls, roofs, or on the opposite side of closed doors may not reach the detector.
- This heat detector by itself does not provide life safety protection Use this detector with ionization and/or photoelectric smoke detectors.
- This detector does not detect oxygen levels, smoke, toxic gases, or flames. Use this device as part of a broad-based life safety program which includes a variety of information sources pertaining to heat and smoke levels, extinguishment systems, visual and audible devices, and other safety measures.
- Independent studies indicate that heat detectors should only be used when property protection alone is involved. Never rely on heat detectors as the sole means of fire protection.

### Typical Wiring

The detector mounting bases accept #18 AWG (0.75mm²), #16 (1.0mm²), #14 AWG (1.5mm²), and #12 AWG (2.5mm²) wire sizes. Sizes #16 AWG (1.0mm²) and #18 AWG (0.75mm²) are preferred for ease of installation.

#### Standard Detector Base, SIGA-SB, SIGA-SB4

This is the basic mounting base for EDWARDS Signature Series detectors. The SIGA-LED Remote LED is supported by this Base.

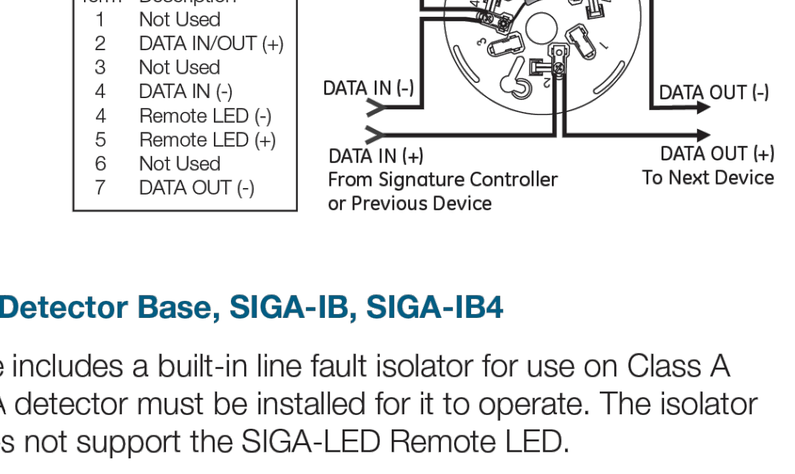


#### Relay Detector Base, SIGA-RB, SIGA-RB4

This base includes a relay. Normally Open or Normally Closed operation is selected during installation. The dry contact is rated for 1 amp (pilot duty) @ 30 Vdc. The relay's position is supervised to avoid accidentally jarring it out of position. The SIGA-RB can be operated as a control relay if programmed to do so at the control panel. The relay base does not support the SIGA-LED Remote LED.

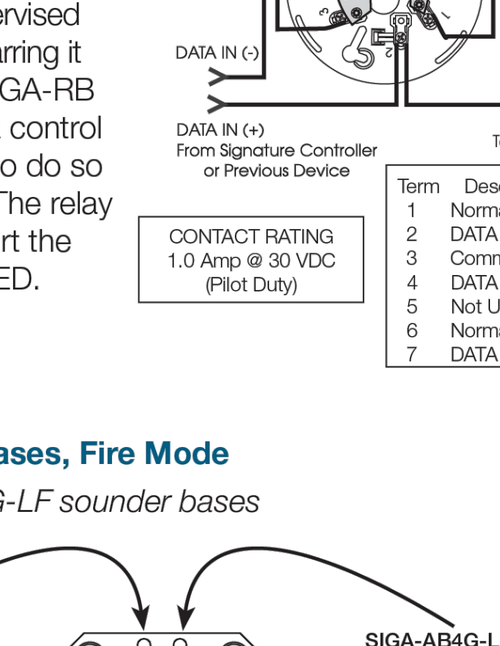


#### Isolator Detector Base, SIGA-IB, SIGA-IB4

This base includes a built-in line fault isolator for use on Class A circuits. A detector must be installed for it to operate. The isolator base does not support the SIGA-LED Remote LED.

The isolator operates as follows:

- a short on the line causes all isolators to open within 23 msec
- at 10 msec intervals,beginning on one side of the Class A circuit nearest the loop controller, the isolators close to provide the next isolator down the line with power
- when the isolator next to the short closes, it reopens within 10 msec.

The process repeats beginning on the other side of the loop controller.

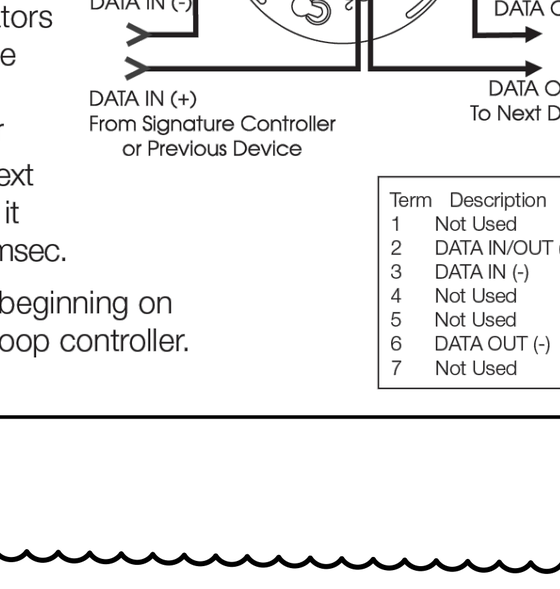


#### Audible Sounder Bases, Fire Mode

*AB4GT, AB4G, AB4G-LF sounder bases*

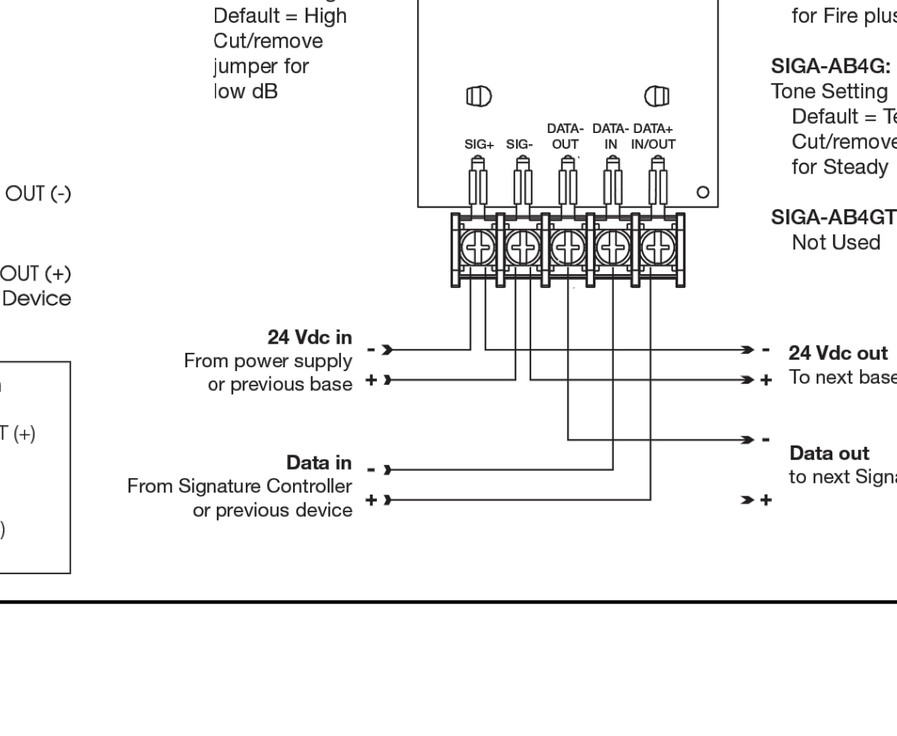


EDWARDS United Technologies
LIFE SAFETY & INCIDENT MANAGEMENT

Contact us...
Email: edwards.fire@fs.utc.com
Web: edwards-fire.com

1016 Corporate Park Drive
Mebane, NC 27302

EDWARDS is a registered mark in the United States and other countries.

© 2018 United Technologies Corporation. All rights reserved.

### Dimensions

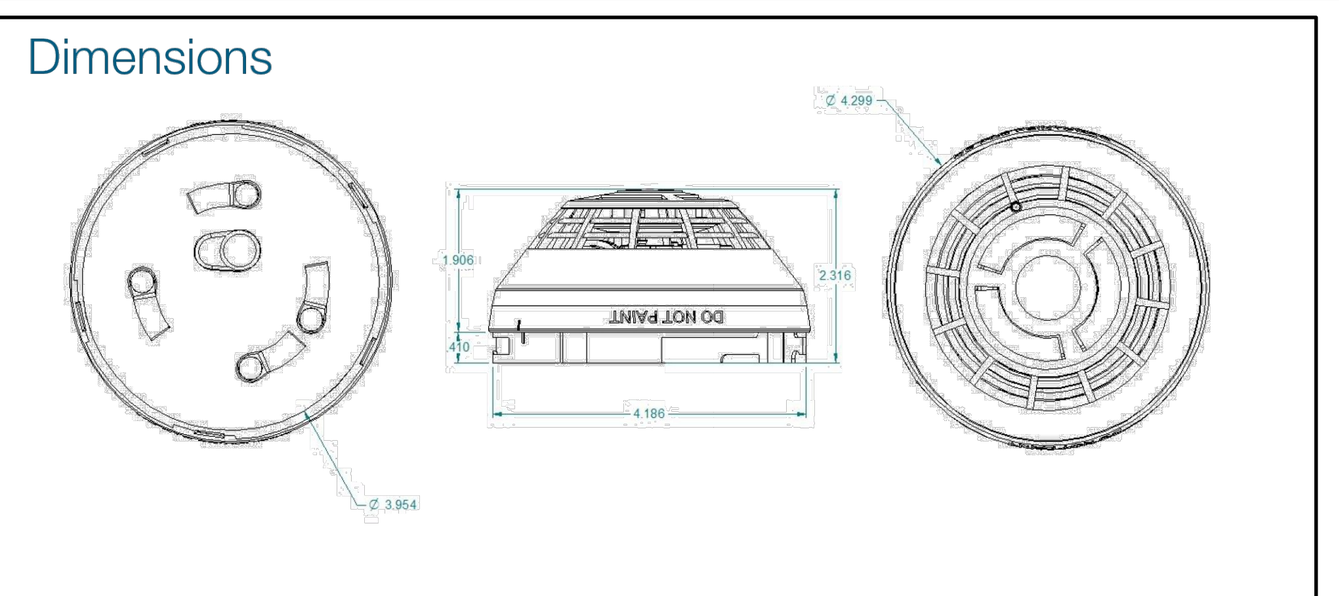

### Specifications

| | SIGA- HRD | SIGA-HFD |
|---|---|---|
| Operating voltage | 15.20 to 19.95 VDC | |
| Normal operating current | 51 µA | |
| Alarm current | 68 µA | |
| Vibration level | 10 to 35 Hz, with an amplitude of 0.01 in. | |
| Rate-of-rise rating | 15°F/min (8°C/min) | NA |
| Fixed temperature rating | 135°F (57.2°C). Actual alarm point 129 to 141°F (53.9 to 60.6°C). | |
| Maximum spacing | 50 ft. (15.2 m) centers | |
| Factory Mutual rating | Ultra-fast | Special |
| Compatible bases | See Ordering Information | |
| Compatible detector testers | Testifire 1000, Testifire 2000 | Testifire 2000 |
| Operating environment | 32 to 100°F (0 to 38°C), 0 to 93% RH, noncondensing | |
| Construction | High Impact Engineering Polymer, White | |
| Storage temperature | -4 to 140°F (-20 to 60°C) | |
| Agency Listings | UL521, CAN/UL-S530, CSFM, FM approved | |

### Ordering Information

| Catalog Number | Description | Ship Wt. lbs (kg) |
|---|---|---|
| SIGA-HRD | Intelligent fixed temperature/Rate-of-rise heat detector | 0.4 (0.16) |
| SIGA-HFD | Intelligent fixed temperature heat detector | |
| **Compatible Bases** | | |
| SIGA-SB | Detector Mounting Base - Standard | 0.2 (.09) |
| SIGA-SB4 | 4-inch Detector Mounting Base c/w Trim Skirt | |
| SIGA-RB | Detector Mounting Base w/Relay | |
| SIGA-RB4 | 4-inch Detector Mounting Base w/Relay, c/w Trim Skirt | |
| SIGA-IB | Detector Mounting Base w/Fault Isolator | |
| SIGA-IB4 | 4-inch Detector Mounting Base w/ Fault Isolator, c/w Trim Skirt | |
| SIGA-AB4G | Audible (Sounder) Base for Fire Detectors | 0.3 (0.15) |
| SIGA-AB4G-LF | Low Frequency Audible (Sounder) Base for CO and Fire Detectors | |
| SIGA-AB4GT | Audible (Sounder) Base for CO and Fire Detectors | |
| SIGA-LED | Remote Alarm LED (not for EN54 applications) | 0.1 (0.04) |
| SIGA-TS4 | Trim Skirt (supplied with 4-inch bases) | |
| SIGA-TS | Trim Skirt (optional for non 4-inch bases) | |
| SIGA-RTA | Detector Removal Tool | |



DATA SHEET E85001-0647
Not to be used for installation purposes. Issue 2.1

## CALIFORNIA DEPARTMENT OF FORESTRY & FIRE PROTECTION
## OFFICE OF THE STATE FIRE MARSHAL
## FIRE ENGINEERING & INVESTIGATIONS DIVISION
## BUILDING MATERIALS LISTING PROGRAM

### LISTING SERVICE

| | |
|---|---|
| LISTING No.: | 7270-1657:0333 |
| CATEGORY: | 7270 - HEAT DETECTOR |
| LISTEE: | EDWARDS, A Division of UTC Fire & Security Americas Corporation, Inc. 8985 Town Center Parkway, Bradenton, FL, 34202<br>Contact: Conover, Jewell (941) 739-4358 (941) 308-8123<br>Email: rhonda.micochero@carrier.com |
| DESIGN: | Models SIGA-HFD, SIGA-HRD, SIGA-H2D, SIGI-HFD, SIGI-HRD, *SIGA-HFD-NL, *SIGA-HRD-NL, *SIGA-H2D-NL, KI-HFD, KI-HRD, KIR-HD, and KI-H2D Analog Addressable Heat Detectors.<br>Model SIGA-HFD is a 135°F fixed temperature heat detector.<br>Model SIGA-HRD is a combination 15°F rate of rise/135°F fixed temperature heat detector.<br>Models SIGI-HFD and SIGI-HRD are similar to Models SIGA-HFD and SIGA-HRD except for isolation circuitry.<br>Models KI-HFD and KI-HRD are identical to Models SIGA-HFD and SIGA-HRD except for trade name.<br>Model KIR-HD is similar to Model SIGA-HFD except for control panel compatibility.<br>Model SIGA-H2D is similar to Model SIGA-HFD except has a programmable threshold.<br>Model KI-H2D is identical to model SIGA-H2D except for the trade name and installation sheet.<br>*Models SIGA-HFD-NL, SIGA-HRD-NL, and SIGA-H2D-NL are identical to the Models SIGA-HFD, SIGA-HRD, and SIGA-H2D respectively, except to signify no logo on the nameplate label<br>Refer to listee's data sheet for detailed product description and operational considerations. |
| RATING: | 15.2-19.95 Vdc |
| INSTALLATION: | In accordance with listee's printed installation instructions, NFPA 72 and applicable codes and ordinances and in a manner acceptable to the authority having jurisdiction. |

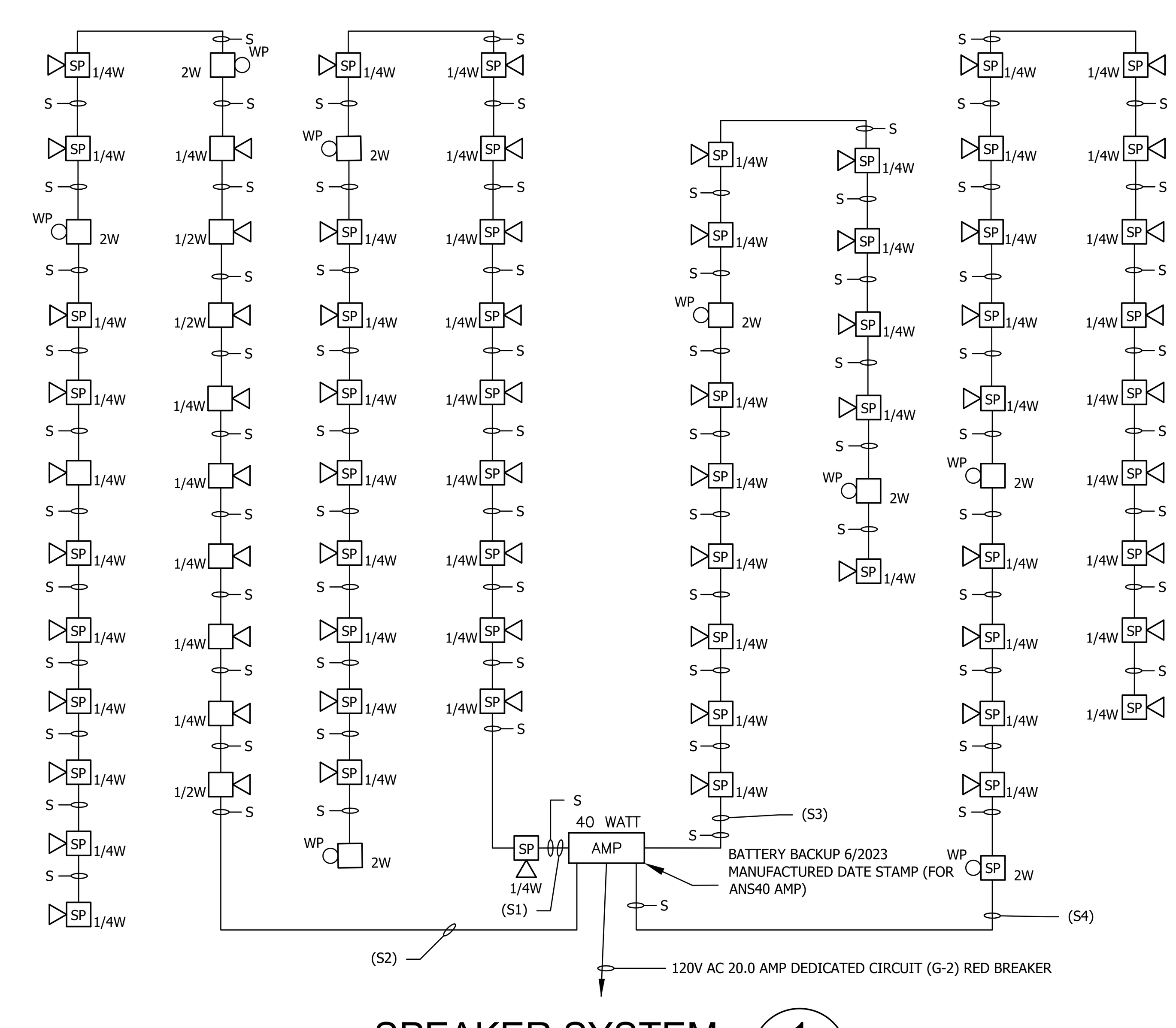


## SPEAKER SYSTEM (1 / E501)

SCALE: NONE

Copyright Lucci and Associates Consulting Electrical Engineers. Deviations from this drawing will not be made without their expressed written permission.

DIVISION OF THE STATE ARCHITECT

AMADOR WHITTLE ARCHITECTS, INC.
28328 AGOURA ROAD, SUITE 203
AGOURA HILLS, CA 91301
(805) 530-3938 , (818) 874-0071

Ventura County Community College

PROJECT TITLE
**MOORPARK COLLEGE ADMINISTRATION BUILDING RENOVATION**

7075 CAMPUS ROAD
MOORPARK, CA 91320

CONSULTANT
LUCCI & ASSOCIATES INC.
CONSULTING ELECTRICAL ENGINEERS
3251 CORTE MALPASO, #511
CAMARILLO, CA 93012-8094
(805) 389-6520    FAX (805) 389-6519

LUCCI & ASSOCIATES, INC. reserve their commonlaw copyright and other property rights in these plans. These plans and drawings are not to be reproduced, changed, or copied in any form or manner whatsoever without first obtaining the expressed written permission and consent of LUCCI & ASSOC. INC nor are they to be assigned to any third party without obtaining said written permission and consent.

STAMPS/SEALS
REGISTERED PROFESSIONAL ENGINEER KENNETH W. LUCCI No. E8340 Exp. 09/30/2026 ELECTRICAL STATE OF CALIFORNIA

12/08/2023 - DSA RESUBMITTAL
1 ADDENDUM 1, 03-13-2025

SHEET TITLE:
**FIRE ALARM GENERAL NOTES AND DEVICES LEGEND**

PROJECT NO.: 21-MPC-040    PROJECT ARCH:
DRAWN: LK/DS    CHECKED:

SHEET NUMBER:
# E501

6/04/2024 UPDATE
DATE: 12/08/23    SHEET: ____ OF ____

IF THIS SHEET IS NOT 30" X 42", IT IS NOT FULL SIZE, SCALE ACCORDINGLY
L.A.I.# 21-375

Drafter: CM03 Paper Size: 12,9
Drawing: G:\21\375\EL\Sheets\21-375E501.dwg
Mar 14, 2025, 3:47pm
Attached XREFS:
XREF: G:\21\375\EL\Xrefs\21-375TB.dwg
Drafter: CM01: G:\21\375\EL\Sheets\21-375E501.dwg: DATE: MAR 14, 2025 TIME: 9:51 AM

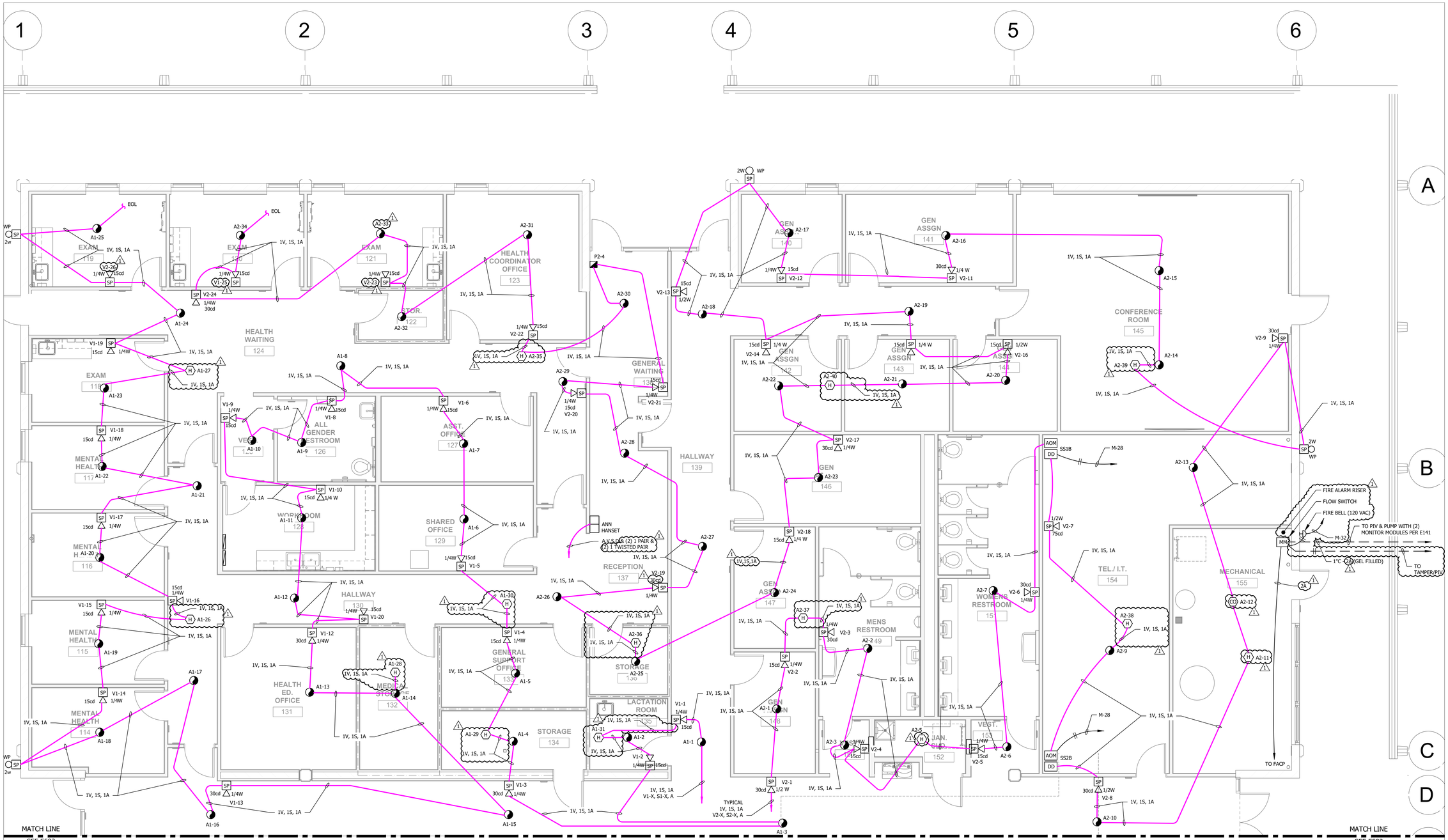


SCALE: 1/4"=1'-0"

0 2' 4' 8'

## ADMINISTRATION BUILDING FIRE ALARM PLAN - WEST

SCALE: 1/4"=1'-0"

1 - E504

N

## KEY MAP

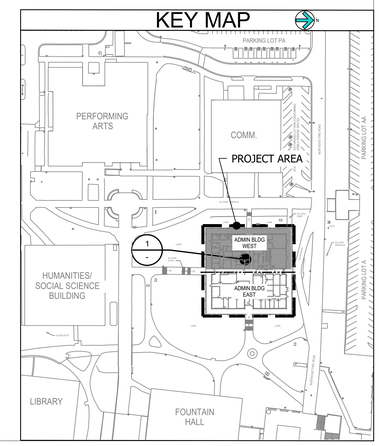



DIVISION OF THE STATE ARCHITECT

AMADOR WHITTLE ARCHITECTS, INC.

28328 AGOURA ROAD, SUITE 203
AGOURA HILLS, CA 91301
(805) 530-3938 , (818) 874-0071


Ventura County Community College

PROJECT TITLE

# MOORPARK COLLEGE ADMINISTRATION BUILDING RENOVATION

7075 CAMPUS ROAD
MOORPARK, CA 91320


CONSULTANT

LUCCI & ASSOCIATES INC.
CONSULTING ELECTRICAL ENGINEERS
3251 CORTE MALPASO, #511
CAMARILLO, CA 93012-8094
(805) 389-6520 FAX (805) 389-6519



**LUCCI & ASSOCIATES, INC.** reserve their commonlaw copyright and other property rights in these plans. These plans and drawings are not to be reproduced, changed, or copied in any form or manner whatsoever without first obtaining the expressed written permission and consent of LUCCI & ASSOC. INC nor are they to be assigned to any third party without obtaining said written permission and consent.


STAMPS/SEALS

REGISTERED PROFESSIONAL ENGINEER KENNETH W. LUCCI No. E14144 Exp. 08/30/2026 ELECTRICAL STATE OF CALIFORNIA

12/08/2023 - DSA RESUBMITTAL

1 ADDENDUM 1, 03-13-2025

SHEET TITLE:

ADMINISTRATION BUILDING FIRE ALARM PLAN - WEST

| | | | |
|---|---|---|---|
| PROJECT NO.: | 21-MPC-040 | PROJECT ARCH: | |
| DRAWN: | LK/DS | CHECKED: | |

SHEET NUMBER:

# E504

6/04/2024 UPDATE

DATE: 12/08/23 SHEET: ___ OF ___

IF THIS SHEET IS NOT 30" X 42", IT IS NOT FULL SIZE, SCALE ACCORDINGLY

L.A.I.# 21-375


Copyright Lucci and Associates Consulting Electrical Engineers. Deviations from this drawing will not be made without their expressed written permission.


PATHNAME: G:\21\375\ELS\Sheets
DRAWING FILENAME: 21-375E504
DRAFTER: CM03
DATE: 14 March 2025
TIME: 3:47 pm

Drafter:CM03 - Paper Size: 12.0
Plotted: 14 Mar 2025 - 3:47pm
By: LK/DS - 3:47pm
W:\21\375\ELS\Sheets\21-375E504.dwg
W:\21\375\ELS\Sheets\21-375E504.pdf

Drafter: CM01: G:\21\375\ELS\Sheets\21-375E504.dwg - DATE: DEC 06, 2023 TIME: 9:52 AM

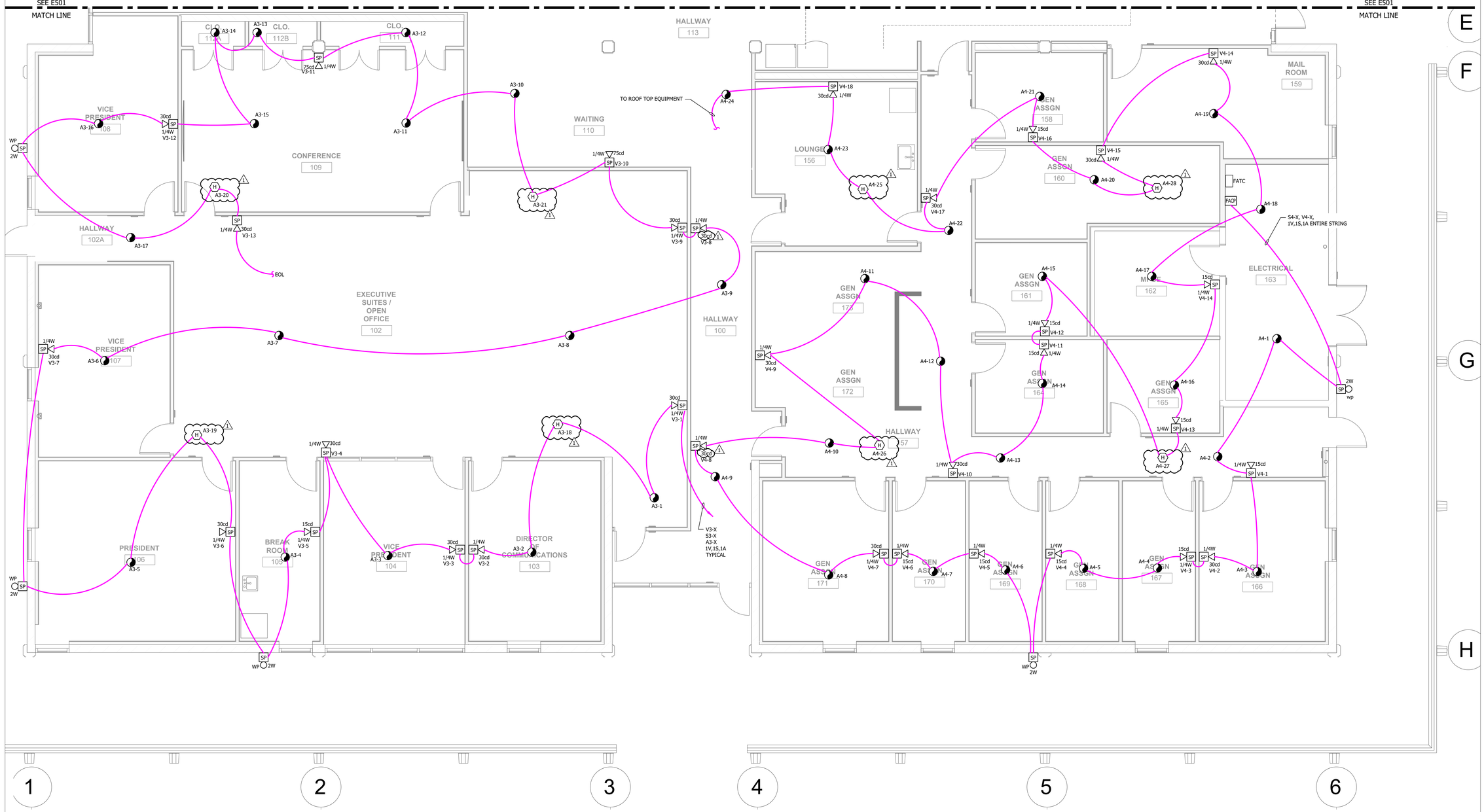


SCALE: 1/4"=1'-0"

0 2' 4' 8'

## ADMINISTRATION BUILDING FIRE ALARM PLAN - EAST

SCALE: 1/4"=1'-0"

1 - E505

N

KEY MAP

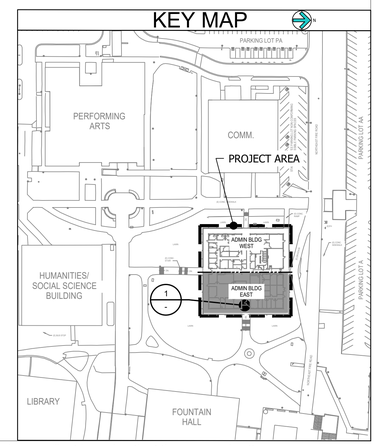



DIVISION OF THE STATE ARCHITECT

AMADOR WHITTLE ARCHITECTS, INC.

28328 AGOURA ROAD, SUITE 203
AGOURA HILLS, CA 91301
(805) 530-3938 , (818) 874-0071


Ventura County Community College

PROJECT TITLE

**MOORPARK COLLEGE ADMINISTRATION BUILDING RENOVATION**

7075 CAMPUS ROAD
MOORPARK, CA 91320


CONSULTANT

LUCCI & ASSOCIATES INC.
CONSULTING ELECTRICAL ENGINEERS
3251 CORTE MALPASO, #511
CAMARILLO, CA 93012-8094
(805) 389-6520 FAX (805) 389-6519



**LUCCI & ASSOCIATES, INC.** reserve their commonlaw copyright and other property rights in these plans. These plans and drawings are not to be reproduced, changed, or copied in any form or manner whatsoever without first obtaining the expressed written permission and consent of LUCCI & ASSOC. INC nor are they to be assigned to any third party without obtaining said written permission and consent.


STAMPS/SEALS

REGISTERED PROFESSIONAL ENGINEER KENNETH W. LUCCI No. E-13447 Exp. 08/30/2026 ELECTRICAL STATE OF CALIFORNIA

12/08/2023 - DSA RESUBMITTAL

1 ADDENDUM 1, 03-13-2025

SHEET TITLE:

ADMINISTRATION BUILDING FIRE ALARM PLAN - EAST

PROJECT NO.: 21-MPC-040 | PROJECT ARCH:
DRAWN: LK/DS | CHECKED:
SHEET NUMBER:

**E505**

6/04/2024 UPDATE

DATE: 12/08/23 | SHEET: ___ OF ___

IF THIS SHEET IS NOT 30" X 42", IT IS NOT FULL SIZE, SCALE ACCORDINGLY
L.A.I.# 21-375


Copyright Lucci and Associates Consulting Electrical Engineers. Deviations from this drawing will not be made without their expressed written permission.



PATHNAME: G:\21\375\ELI\Sheets
DRAWING FILENAME: 21-375E505
DRAFTER: CM03
DATE: 14 March 2025
TIME: 3:47 pm

Drafter:CM03 Paper Size: 11X
Plot Date: 14 March 2025
Plot By: Lucci & Associates
Plot Time: 3:47pm
W:\21\375\ELI\sheets\21-375E505.dwg
W:\21\375\Xrefs\Arch\A1-1FIRSTFLOOR.dwg
W:\21\375\Xrefs\Arch\A1-2SECONDFLOOR.dwg


Border: CH01: G:\21\375\ELI\Sheets\21-375E502.dwg DATE: APR 14, 2023 TIME: 2:02 PM

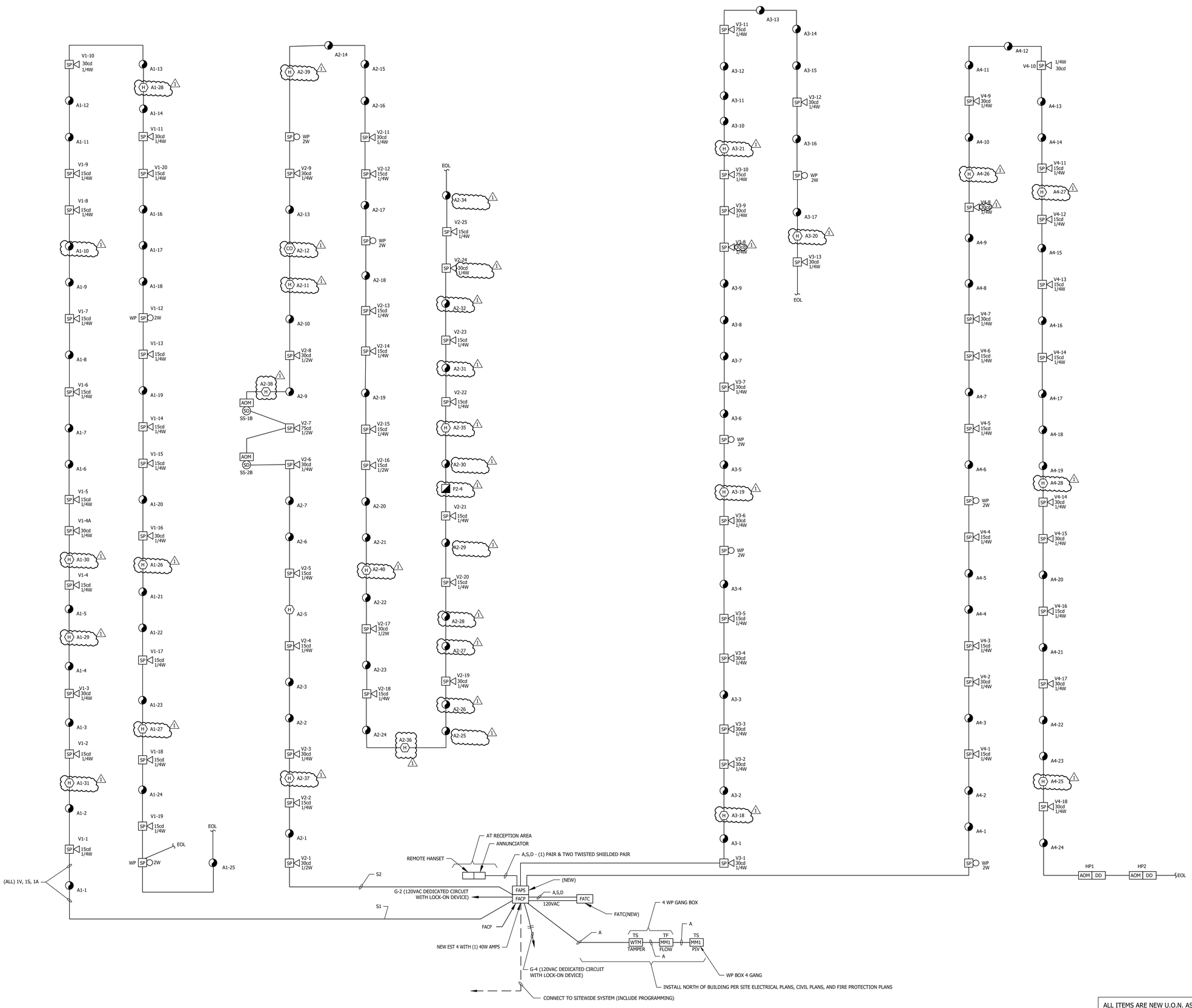


## NEW FIRE RISER DIAGRAM

SCALE: NONE

1 - E507

ALL ITEMS ARE NEW U.O.N. AS (X)

FIRE ALARM IS COMPLETE
BUILDING FULLY ADDRESSABLE

Copyright Lucci and Associates Consulting Electrical Engineers. Deviations from this drawing will not be made without their expressed written permission.

DIVISION OF THE STATE ARCHITECT

AMADOR WHITTLE
ARCHITECTS, INC.
28328 AGOURA ROAD, SUITE 203
AGOURA HILLS, CA 91301
(805) 530-3938 , (818) 874-0071

Ventura County Community College

PROJECT TITLE

# MOORPARK COLLEGE ADMINISTRATION BUILDING RENOVATION

7075 CAMPUS ROAD
MOORPARK, CA 91320

CONSULTANT

LUCCI & ASSOCIATES INC.
CONSULTING ELECTRICAL ENGINEERS
3251 CORTE MALPASO, #511
CAMARILLO, CA 93012-8094
(805) 389-6520 FAX (805) 389-6519

**LUCCI & ASSOCIATES, INC.** reserve their commonlaw copyright and other property rights in these plans. These plans and drawings are not to be reproduced, changed, or copied in any form or manner whatsoever without first obtaining the expressed written permission and consent of LUCCI & ASSOC. INC nor are they to be assigned to any third party without obtaining said written permission and consent.

STAMPS/SEALS

REGISTERED PROFESSIONAL ENGINEER KENNETH W. LUCCI No. E14144 Exp. 08/30/2026 ELECTRICAL STATE OF CALIFORNIA

12/08/2023 - DSA RESUBMITTAL

1 ADDENDUM 1, 03-13-2025

SHEET TITLE:

NEW FIRE ALARM RISER DIAGRAM

| | | | |
|---|---|---|---|
| PROJECT NO.: | 21-MPC-040 | PROJECT ARCH.: | |
| DRAWN: | LK/DS | CHECKED: | |

SHEET NUMBER:

# E507

6/04/2024 UPDATE

DATE: 12/08/23 SHEET: ____ OF ____

IF THIS SHEET IS NOT 30" X 42", IT IS NOT FULL SIZE, SCALE ACCORDINGLY

L.A.I.# 21-375

DRAFTER: CM03 DRAWING FILENAME: 21-375E507 PATHNAME: G:\21\375\ELI\Sheets DATE: 14 March 2025 TIME: 3:47 pm

Drafter:CM03 Page Size: 12.0
Ref Fig: (21-375Sheet02)-375E002.dwg
Ref Fig: (21-375Sheet03)-375E003.dwg
Ref Fig: (21-375Sheet04)-375E004.dwg
Ref Fig: (21-375Sheet05)-375E005.dwg
Ref Fig: (21-375Sheet06)-375E006.dwg

Drafter: CM03; G:\21\375\ELI\Sheets\21-375E507.dwg; DATE: NOV 10, 2023 TIME: 11:08 AM

FOR MORE INFORMATION ON ROD STIFFENER
SEE STRUCTURAL PLANS SHEET 27/S022

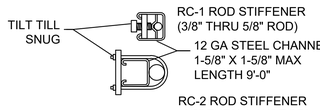


DETAIL C

FOR MORE INFORMATION ON STRUCTURAL SUPPORT
SEE STRUCTURAL PLANS SHEET 33/S022 AND 16/S021

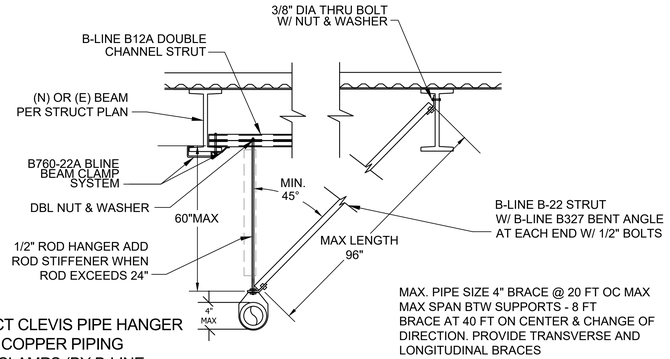


PROVIDE B-LINE B3170CT CLEVIS PIPE HANGER
B-LINE B3170CTC 1F AT COPPER PIPING
PROVIDE 2 PIECE PIPE CLAMPS (BY B-LINE, UNISTRUT, OR EQUIV.) AT LONGITUDINAL BRACES

MAX. PIPE SIZE 4" BRACE @ 20 FT OC MAX
MAX SPAN BTW SUPPORTS - 8 FT
BRACE AT 40 FT ON CENTER & CHANGE OF DIRECTION. PROVIDE TRANSVERSE AND LONGITUDINAL BRACES

CONDUIT SUPPORT

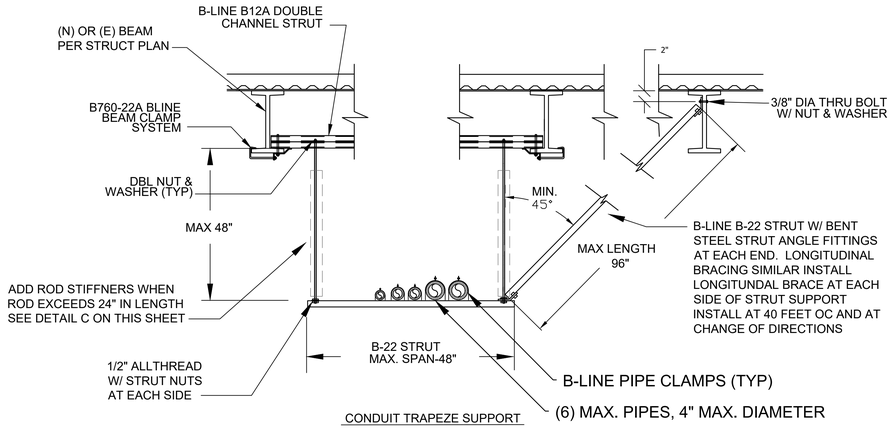


CONDUIT TRAPEZE SUPPORT

## TYPICAL CONDUIT SUPPORT DETAILS 5
SCALE: NONE - E600

NOTE:

1. ALL CONDUCTORS EXPOSED ABOVE FINISHED FLOOR TERMINATING ON GROUND BUS SHALL BE PROTECTED BY SCHEDULE 80 PVC CONDUIT WITH BELL ENDS TO 6" ABOVE FLOOR.

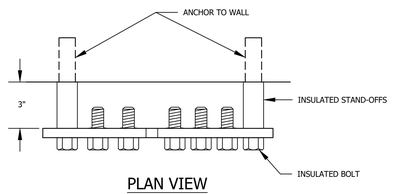


PLAN VIEW

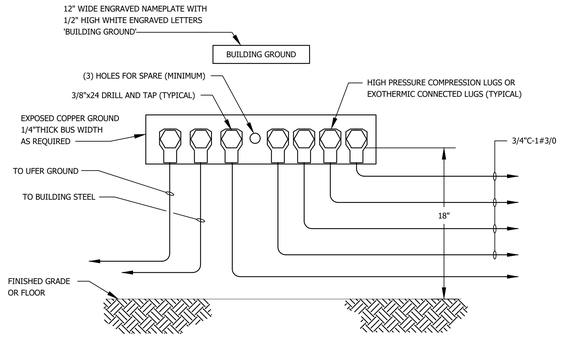


ELEVATION

## TYPICAL GROUND BUS BAR DETAIL 6
SCALE: NONE - E600

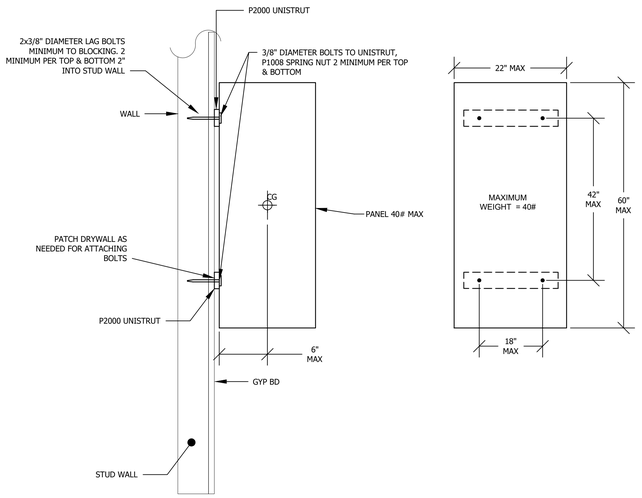


SIDE VIEW FRONT VIEW

## PANELBOARD, FIRE ALARM OR IDF PANEL ANCHORAGE WOODEN WALL - SURFACE 4
SCALE: NONE - E600

DETAIL NOTES:

1. CONCRETE-ENCASED ELECTRODE: AN ELECTRODE ENCASED BY AT LEAST 2 INCHES (50.8MM) OF CONCRETE. LOCATED WITHIN AND NEAR THE BOTTOM OF A CONCRETE FOUNDATION OR FOOTING THAT IS IN DIRECT CONTACT WITH THE EARTH, CONSISTING OF AT LEAST 20 FEET (6.1 M) OF ONE OR MORE BARE OR ZINC GALVANIZED OR OTHER ELECTRICALLY CONDUCTIVE COATED STEEL REINFORCING BARS OR RODS OF NOT LESS THAN 1/2 INCH (12.7 MM) DIAMETER, OR CONSISTING OF AT LEAST 20 FEET (6.1 M) OF BARE COPPER CONDUCTOR NOT SMALLER THAN NO. 4, SEE PLANS FOR SIZE OF CONDUCTOR IF GREATER THEN #4.

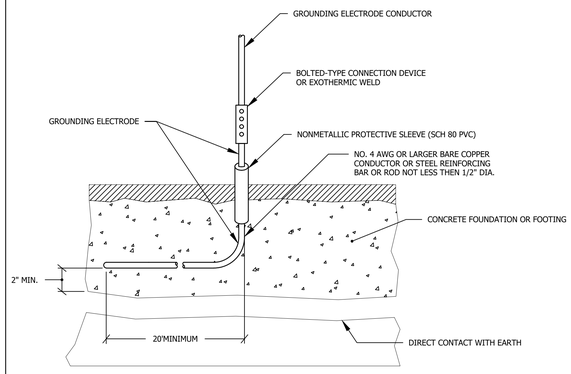


## UFER GROUND DETAIL 3
SCALE: NONE - E600

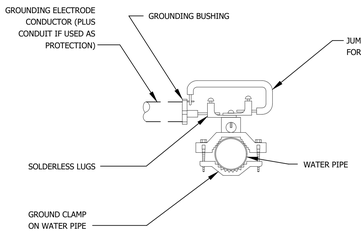


## COLD WATER GROUND DETAIL 2
SCALE: NONE - E600

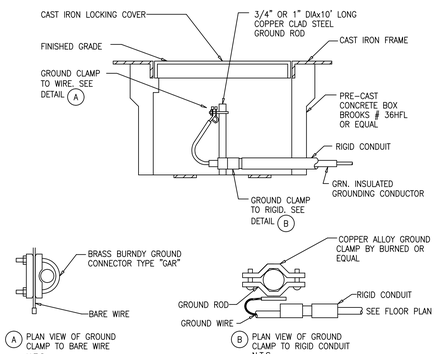


## GROUND ROD AND PRE-CAST CONCRETE BOX DETAIL 1
SCALE: NTS - E600


DIVISION OF THE STATE ARCHITECT

AMADOR WHITTLE
ARCHITECTS, INC.
28328 AGOURA ROAD, SUITE 203
AGOURA HILLS, CA 91301
(805) 530-3938 , (818) 874-0071


Ventura County Community College

PROJECT TITLE
**MOORPARK COLLEGE ADMINISTRATION BUILDING RENOVATION**

7075 CAMPUS ROAD
MOORPARK, CA 91320


CONSULTANT
LUCCI & ASSOCIATES INC.
CONSULTING ELECTRICAL ENGINEERS
3251 CORTE MALPASO, #511
CAMARILLO, CA 93012-8094
(805) 389-6520 FAX (805) 389-6519



**LUCCI & ASSOCIATES, INC.** reserve their commonlaw copyright and other property rights in these plans. These plans and drawings are not to be reproduced, changed, or copied in any form or manner whatsoever without first obtaining the expressed written permission and consent of LUCCI & ASSOC. INC nor are they to be assigned to any third party without obtaining said written permission and consent.


STAMPS/SEALS

REGISTERED PROFESSIONAL ENGINEER KENNETH W. LUCCI No. E 13437 Exp. 08/30/2026 ELECTRICAL STATE OF CALIFORNIA

12/08/2023 - DSA RESUBMITTAL

1 ADDENDUM 1, 03-13-2025

SHEET TITLE:
ELECTRICAL DETAILS

PROJECT NO: 21-MPC-040 | PROJECT ARCH:
DRAWN: LK/DS | CHECKED:

SHEET NUMBER:
**E600**

6/04/2024 UPDATE

DATE: 12/08/23 | SHEET: ____ OF ____

IF THIS SHEET IS NOT 30" X 42", IT IS NOT FULL SIZE, SCALE ACCORDINGLY
L.A.I.# 21-375


Copyright Lucci and Associates Consulting Electrical Engineers. Deviations from this drawing will not be made without their expressed written permission.



PATHNAME: G:\21\375\ELI\Sheets DRAWING FILENAME: 21-375E600 DRAFTER: CM03 DATE: 14 March 2025 TIME: 3:47 pm

Drafter:CM03; Paper Size: 11.0 X 17.0in.(ANSI B Tabloid); Plot at 100.0 % Scale; WBP:G:\21\375\Sheets\21-375E600.dwg

Drafter: CM01; G:\21\375\ELI\Sheets\21-375E600.dwg; DATE: JAN 09, 2024, TIME: 3:30 PM

TIME: 3:47 pm DATE: 14 March 2025 PATHNAME: G:\21\375\EL\Sheets DRAWING FILENAME: 21-375E601 DRAFTER: CM03

## GENERAL NOTES

1. ALL WORK SHALL CONFORM WITH THE 2022 CALIFORNIA BUILDING CODE, AND ALL LOCAL ORDINANCES.
2. THE CONTRACTOR SHALL VERIFY ALL DIMENSIONS AND CONDITIONS PRIOR TO STARTING CONSTRUCTION AND BRING TO THE ATTENTION OF THE ENGINEER ANY DISCREPANCIES OR INCONSISTENCIES.
3. NO STRUCTURAL MEMBER SHALL BE CUT, NOTCHED, BORED OR OTHER-WISE WEAKENED EXCEPT AS ALLOWED BY THE CALIFORNIA BUILDING CODE OR APPROVED BY THE ENGINEER.
4. THE ENGINEER SHALL BE NOTIFIED OF ANY UNUSUAL OR UNFORSEEN CONDITION WHICH EFFECTS THE STRUCTURAL STABILITY OF THE BUILDING PRIOR TO CONTINUING WITH CONSTRUCTION. SHOULD ANY CONDITION ARISE WHERE THERE APPEARS TO BE AN ERROR ON THE DRAWINGS OR A DISCREPANCY BETWEEN THE DRAWINGS AND CONDITIONS IN THE FIELD, THE ENGINEER SHALL BE NOTIFIED PRIOR TO CONTINUING WITH THE WORK.
5. IN THE CASE WHERE TWO OR MORE DETAILS APPLYING TO THE SAME PART OF THE WORK ARE IN CONFLICT, THE MOST RESTRICTIVE SHALL GOVERN UNLESS CLARIFIED OR OTHERWISE APPROVED BY THE ENGINEER.
6. REVIEW OF SHOP DRAWINGS MEANS REVIEW OF GENERAL METHOD OF FABRICATION ONLY. DIMENSIONS AND QUANTITIES MAY NOT BE CHECKED, AND REVIEW OF THE SHOP DRAWINGS DOES NOT RELIEVE THE CONTRACTOR FROM COMPLIANCE WITH THE CONSTRUCTION DOCUMENTS UNLESS SPECIFICALLY SO INDICATED IN THE REVIEW.
7. THE ENGINEER HAS NOT BEEN RETAINED FOR SUPERVISION OR INSPECTION DURING CONSTRUCTION, BUT WILL RESOLVE STRUCTURAL ITEMS BROUGHT TO HIS ATTENTION DURING CONSTRUCTION.
8. THE CONTRACTOR SHALL BE RESPONSIBLE FOR ALL SHORING AND BRACING REQUIRED TO PROTECT PERSONNEL AND ADJACENT PROPERTY DURING CONSTRUCTION. THE CONTRACTOR SHALL ADEQUATELY BRACE ELEMENTS OF THE STRUCTURE DURING CONSTRUCTION TO INSURE THE SAFETY OF THE STRUCTURE.
9. (E) INDICATES EXISTING CONDITION OR MEMBER, (N) NEW.

### FOUNDATION

1. THERE IS NO SILS REPORT FOR THIS PROJECT AND AN ASSUMED SOIL BEARING VALUE OF 1,000 PSF, (NET), HAS BEEN USED IN THE DESIGN OF THE A/C PAD.
2. THE NEW GENERATOR PAD/MAT SHALL BEAR A MINIMUM OF 8" INTO FIRM, UNDISTURBED SOILS. THE CONTRACTOR SHALL RECOMPACT THE SOILS UNDERNEATH THE NEW PAD/MAT AS NECESSARY.

### CONCRETE

1. ALL CONCRETE UNLESS OTHERWISE SHOWN ON THE PLANS SHALL BE HARDROCK CONFORMING TO ASTM C-94 WITH A MINIMUM COMPRESSIVE STRENGTH AT 28 DAYS OF F'c = 3,000 PSI.
2. AGGREGATE FOR THE CONCRETE SHALL CONFORM TO ASTM C-33, INCLUDING APPENDIX "X1".
3. THE CONTRACTOR SHALL TAKE ADEQUATE PRECAUTIONS FOR MIXING, PLACING, FINISHING, CURING, AND PROTECTING CONCRETE DURING UNFAVORABLE WEATHER CONDITIONS.
4. ALL REINFORCING STEEL SHALL BE NEW STOCK DEFORMED BAR CONFORMING TO ASTM A-615, GRADE 60 EXCEPT#3 BARS MAY BE GRADE 40.. ALL WELDED REINF. STEEL SHALL BE ASTM- A706. ALL BARS SHALL BE FREE OF RUST, GREASE, MILL SCALE OR ANY OTHER MATERIALS WHICH MIGHT AFFECT ITS BOND TO THE CONCRETE ALL BAR BENDS SHALL BE MADE COLD.
5. PROVIDE 3/4" CHAMFER ON ALL EXPOSED CORNERS.
6. BAR SPLICES SHALL BE LAP SPLICES w/ MIN. 40 BAR DIAM. LAP w/ AN 18" MINIMUM, (WHICHEVER IS GREATER). STAGGER LAP SPLICES OF MULTIPLE BARS, (i.e. IN CONT. FOOTING w/ 2 HORIZ. BARS TOP AND BOTTOM STAGGER TOP BAR LAP SPLICES AND STAGGER BOTTOM BAR LAP SPLICES- SPLICES DO NOT HAVE TO BE STAGGERED BETWEEN TOP AND BOTTOM BARS).
7. REINFORCING BARS SHALL HAVE THE FOLLOWING CONCRETE COVER, (UNLESS NOTED OTHERWISE IN DETAILS):
   CONCRETE POURED AGAINST EARTH..................3 INCHES
   CONCRETE BEAMS AND COLUMNS.......................2 INCHES
   CONCRETE SLABS ABOVE GRADE........................1 INCH
8. DRYPACK SHALL BE MIXED IN THE PROPORTIONS OF 1 PART PORTLAND CEMENT TO 2-1/2 PARTS SAND WITH ENOUGH WATER TO PRODUCE A STIFF MIX. DRYPACK SHALL BE THOROUGHLY TAMPED INTO PLACE TO ENSURE A DENSE FINISH, FREE OF VOIDS.
9. THE SLUMP OF THE CONCRETE SHALL BE THE MINIMUM THAT IS PRACTICABLE. WHEN VIBRATORS ARE USED TO CONSOLIDATE THE CONCRETE, THE SLUMP SHALL NOT EXCEED 4 INCHES, OTHERWISE THE SLUMP SHALL NOT EXCEED 6 INCHES.
10. ALL CONCRETE SHALL BE ADEQUATELY CONSOLIDATED DURING PLACEMENT AND ALL REINFORCING STEEL AND EMBEDDED ITEMS SHALL BE SECURELY TIED IN PLACE TO PREVENT DISPLACEMENT DURING CONCRETE PLACEMENT.
11. EXCEPT WHERE INDICATED OTHERWISE, ALL REINFORCING STEEL SHALL BE BENT AND PLACED IN ACCORDANCE WITH THE "CODE OF STANDARD PRACTICE AND THE SPECIFICATIONS FOR PLACING REINFORCING STEEL" OF THE CONCRETE REINFORCING STEEL INSTITUTE.

## AP111812P

| ITEM | PART NO. | WT. |
|---|---|---|
| ASSEMBLY | AP111812P | 69 LBS |
| PALLET QTY | 35 | 2483 LBS |
| LID | CP1118B | 25 LBS |
| ENCLOSURE | BP111812B | 44 LBS |

**PART DESCRIPTION:**
11" x 18" x 12"
POLYMER CONCRETE ASSEMBLY
STRAIGHT WALL, OPEN BOTTOM

**LOAD RATING:**
☐ TIER 15
☐ TIER 22

**BOLT DOWN:**
☐ HEX HEAD (STANDARD)
☐ PENTA HEAD

**LOGO OPTIONS:**
☐ ELECTRIC
☐ COMMUNICATIONS
☐ FIBER OPTICS
☐ BLANK
☐ WATER
☐ LIGHTING
☐ STREET LIGHTING
☐ CAVITY (LOGO SOLD SEPARATELY)
*OTHER OPTIONS AVAILABLE (CONTACT FACTORY)

**AVAILABLE OPTIONS:**
☐ EMS MARKER, POWER
☐ EMS MARKER, TELEPHONE
☐ MOUSEHOLES
☐ CABLE RACKING (LOC. & QTY. REQ'D.)
☐ PULLING EYES
*OTHER OPTIONS AVAILABLE (CONTACT FACTORY)

GLASMASTERS
GLASMASTERS, INC.
8873 WESTERN WAY, JAX., FL 32256
(904) 400-7100 - (904) 358-1702 FAX
WWW.GLASMASTERS.COM

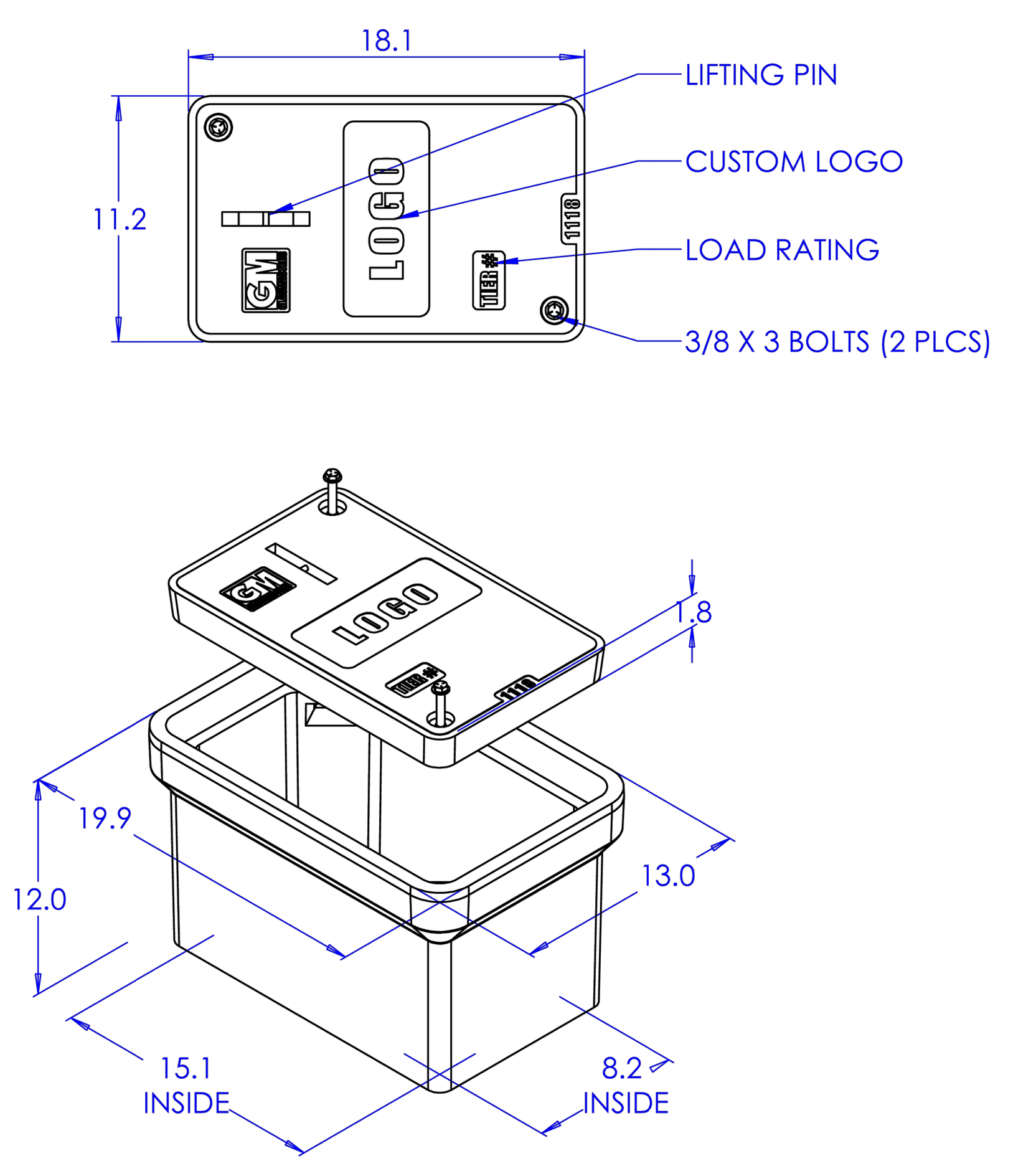


12" x 18" PULLBOX 4
SCALE: NONE - E601

### DETAIL NOTES:

1. ALL EMPTY CONDUITS TO BE PROVIDED WITH METERED PULLWIRES THEIR ENTIRE LENGTH.
2. ALL CONDUITS BENDS SHALL BE FACTORY BENDS WITH MINIMUM 12 TIMES DIAMETER FOR BEND RADIUS.

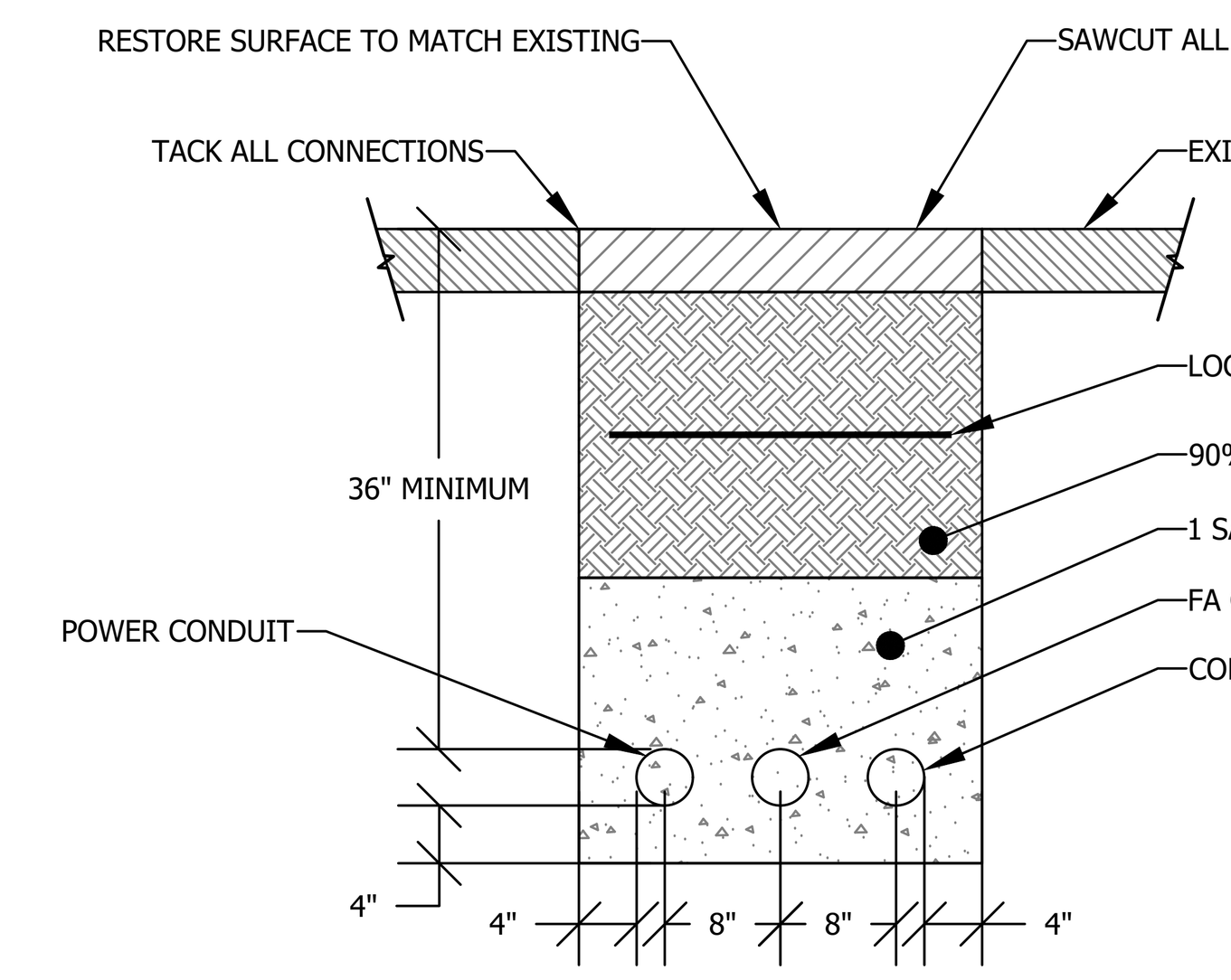


DUCTBANK SECTION 2
SCALE: NONE - E601

## GENERAL NOTES

### GENERAL

1. ALL WORK SHALL CONFORM WITH THE 2022 CALIFORNIA BUILDING CODE, (CBC), AND ALL LOCAL ORDINANCES.
2. THE CONTRACTOR SHALL VERIFY ALL DIMENSIONS AND CONDITIONS PRIOR TO STARTING CONSTRUCTION AND BRING TO THE ATTENTION OF THE ENGINEER ANY DISCREPANCIES OR INCONSISTENCIES.
3. NO STRUCTURAL MEMBER SHALL BE CUT, NOTCHED, BORED OR OTHER-WISE WEAKENED EXCEPT AS ALLOWED BY THE CALIFORNIA BUILDING CODE OR APPROVED BY THE ENGINEER.
4. THE ENGINEER SHALL BE NOTIFIED OF ANY UNUSUAL OR UNFORSEEN CONDITION WHICH EFFECTS THE STRUCTURAL STABILITY OF THE BUILDING PRIOR TO CONTINUING WITH CONSTRUCTION. SHOULD ANY CONDITION ARISE WHERE THERE APPEARS TO BE AN ERROR ON THE DRAWINGS OR A DISCREPANCY BETWEEN THE DRAWINGS AND CONDITIONS IN THE FIELD, THE ENGINEER SHALL BE NOTIFIED PRIOR TO CONTINUING WITH THE WORK.
5. IN THE CASE WHERE TWO OR MORE DETAILS APPLYING TO THE SAME PART OF THE WORK ARE IN CONFLICT, THE MOST RESTRICTIVE SHALL GOVERN UNLESS CLARIFIED OR OTHERWISE APPROVED BY THE ENGINEER.
6. REVIEW OF SHOP DRAWINGS MEANS REVIEW OF GENERAL METHOD OF FABRICATION ONLY. DIMENSIONS AND QUANTITIES MAY NOT BE CHECKED, AND REVIEW OF THE SHOP DRAWINGS DOES NOT RELIEVE THE CONTRACTOR FROM COMPLIANCE WITH THE CONSTRUCTION DOCUMENTS UNLESS SPECIFICALLY SO INDICATED IN THE REVIEW.
7. THE ENGINEER HAS NOT BEEN RETAINED FOR SUPERVISION OR INSPECTION DURING CONSTRUCTION, BUT WILL RESOLVE STRUCTURAL ITEMS BROUGHT TO HIS ATTENTION DURING CONSTRUCTION.
8. THE CONTRACTOR SHALL BE RESPONSIBLE FOR ALL SHORING AND BRACING REQUIRED TO PROTECT PERSONNEL AND ADJACENT PROPERTY DURING CONSTRUCTION. THE CONTRACTOR SHALL ADEQUATELY BRACE ELEMENTS OF THE STRUCTURE DURING CONSTRUCTION TO INSURE THE SAFETY OF THE STRUCTURE.

### CONCRETE

1. ALL CONCRETE UNLESS OTHERWISE SHOWN ON THE PLANS SHALL BE HARDROCK CONFORMING TO ASTM C-94 WITH A MINIMUM COMPRESSIVE STRENGTH AT 28 DAYS OF F'c = 2500 PSI. (SPECIAL INSPECTION NOT REQUIRED DUE TO NATURE OF PROJECT- FLAG POLED FOOTINGS w/ MINOR CONCRETE STRESSES). CONCRETE MAY BE A PEA GRAVEL MIX.
2. AGGREGATE FOR THE CONCRETE SHALL CONFORM TO ASTM C-33, INCLUDING APPENDIX "X1".
3. THE CONTRACTOR SHALL TAKE ADEQUATE PRECAUTIONS FOR MIXING, PLACING, FINISHING, CURING, AND PROTECTING CONCRETE DURING UNFAVORABLE WEATHER CONDITIONS.
4. ALL REINFORCING STEEL SHALL BE NEW STOCK DEFORMED BARS CONFORMING TO ASTM A-615, GRADE 60 EXCEPT#3 BARS MAY BE GRADE 40.. ALL WELDED REINF. STEEL SHALL BE ASTM- A706. ALL BARS SHALL BE FREE OF RUST, GREASE, MILL SCALE OR ANY OTHER MATERIALS WHICH MIGHT AFFECT ITS BOND TO THE CONCRETE ALL BAR BENDS SHALL BE MADE COLD.
5. PROVIDE 3/4" CHAMFER ON ALL EXPOSED CORNERS.
6. ALL REINFORCING STEEL FOR THE "FLAG POLE" TYPE FOOTINGS SHALL BE ONE PIECE. SPLICES ARE NOT ALLOWED EXCEPT AS APPROVED BY THE ENGINEER.
7. REINFORCING BARS SHALL HAVE THE FOLLOWING CONCRETE COVER, (UNLESS NOTED OTHERWISE IN DETAILS):
   CONCRETE POURED AGAINST EARTH..................3 INCHES
   CONCRETE BEAMS AND COLUMNS.......................2 INCHES
   CONCRETE SLABS ABOVE GRADE........................1 INCH
8. DRYPACK SHALL BE MIXED IN THE PROPORTIONS OF 1 PART PORTLAND CEMENT TO 2-1/2 PARTS SAND WITH ENOUGH WATER TO PRODUCE A STIFF MIX. DRYPACK SHALL BE THOROUGHLY TAMPED INTO PLACE TO ENSURE A DENSE FINISH, FREE OF VOIDS.
9. THE SLUMP OF THE CONCRETE SHALL BE THE MINIMUM THAT IS PRACTICABLE. WHEN VIBRATORS ARE USED TO CONSOLIDATE THE CONCRETE, THE SLUMP SHALL NOT EXCEED 4 INCHES, OTHERWISE THE SLUMP SHALL NOT EXCEED 6 INCHES.
10. ALL CONCRETE SHALL BE ADEQUATELY CONSOLIDATED DURING PLACE-MENT AND ALL REINFORCING STEEL AND EMBEDDED ITEMS SHALL BE SECURELY TIED IN PLACE TO PREVENT DISPLACEMENT DURING CONCRETE PLACEMENT.
11. EXCEPT WHERE INDICATED OTHERWISE, ALL REINFORCING STEEL SHALL BE BENT AND PLACED IN ACCORDANCE WITH THE "CODE OF STANDARD PRACTICE AND THE SPECIFICATIONS FOR PLACING REINFORCING STEEL" OF THE CONCRETE REINFORCING STEEL INSTITUTE.

### ABBREVIATIONS

| | | | |
|---|---|---|---|
| A.B.- | ANCHOR BOLT | HT.- | HEIGHT |
| BLKG.- | BLOCKING | GA- | GAUGE |
| B.J.- | BALCONY JOISTS | GALV.- | GALVANIZED |
| BLK.- | BLOCK | HORIZ.- | HORIZONTAL |
| BM.- | BEAM | L.J.V.- | LONG LEG VERTICAL |
| B.N.- | BOUNDRY NAIL | L.J.V.- | LONG LEG HORIZONTAL |
| (A)- | BOTTOM | MAX- | MAXIMUM |
| CLR- | CLEAR | MIN- | MINIMUM |
| CMU- | CONCRETE MASONRY | M.B.- | MACHINE BOLT |
| COL.- | COLUMN | (N)- | NEW |
| C.J.- | CEILING JOIST | NTS- | NOT TO SCALE |
| CONC.- | CONCRETE | O.C.- | ON CENTER |
| CONN.- | CONNECTION | OPP.- | OPPOSITE |
| CONT.- | CONTINUOUS | R.J.- | ROOF JOIST |
| C TO C- | CENTER TO CENTER | R.B.- | ROOF BEAM |
| CNTRSNK- | COUNTERSINK | REF.- | REFERENCE |
| DBL- | DOUBLE | P.R.T.- | PREFAB ROOF TRUSSES |
| DIAM- | DIAMETER DOUGLAS FIR | REINF.- | REINFORCING STEEL |
| D.J.- | DOUGLAS FIR | SEL. STR.- | SELECT STRUCTURAL |
| DRWGS- | DRAWINGS | SHTG.- | SHEATHING |
| (E)- | EXISTING | STAG- | STAGGER |
| EA.- | EACH | SIM.- | SIMILAR |
| ELEV- | ELEVATION | STD.- | STANDARD |
| FLG.- | FLANGE | STL- | STEEL |
| FL.- | FLOOR | TYP.- | TYPICAL |
| FIN- | FINISH | (T)- | TOP |
| F.J.- | FLOOR JOISTS | TOS- | TOP OF SHEATHING |
| FOM- | FACE OF MASONRY | T.R.- | TUBE SECTION |
| FOS- | FACE OF STUD | U.N.- | UNLESS OTHERWISE NOTED |
| FOC- | FACE OF CONCRETE | W or WF- | WIDE FLANGE SHAPE |
| HD- | SIMPSON HOLDOWN | W/O- | WITH OUT |
| | | VERT.- | VERTICAL |

### SPECIAL INSPECTIONS

PROVIDE SPECIAL INSPECTION BY A LICENSED DEPUTY INSPECTOR APPROVED BY THE LOCAL BUILDING OFFICAL FOR THE FOLLOWING WORK IN ACCORDANCE WITH THE REQUIREMENTS OF CHAPTER 17 OF THE CALIFORNIA BUILDING CODE:
1. FOR ALL CONCRETE WITH AN F'c OVER 2,500 psi.
2. FOR ALL REINFORCING STEEL WHICH IS PLACED IN CONCRETE WITH AN F'c OVER 2,500 psi.
3. AS NOTED ELSEWHERE IN THE PLANS OR ON DETAILS.

PRIOR TO FINAL INSPECTION THE 'DESIGN PROFESSIONAL IN RESPONSIBLE CHARGE' SHALL ASSEMBLE ALL FINAL SPECIAL INSPECTION REPROTS FROM EACH OF THE SPECIAL INSPECTION CATAGORIES AND SUBMIT A REPORT NOTING THAT ALL SPECIAL INSPECTION REQUIREMENTS HAVE BEEN COMPLETED WITH NO OUTSTANDING ISSUES.

### SPECIAL INSPECTIONS

PROVIDE SPECIAL INSPECTION BY A LICENSED DEPUTY INSPECTOR APPROVED BY THE LOCAL BUILDING OFFICAL FOR THE FOLLOWING WORK IN ACCORDANCE WITH THE REQUIREMENTS OF CHAPTER 17 OF THE CALIFORNIA BUILDING CODE:
1. FOR ALL "POST INSTALLED" ANCHORS, (MECHANICAL EXPANSION BOLTS AND EPOXIED THREADED RODS ANCHOR).

### EQUIPMENT ANCHORAGE

THE EQUIPMENT SHALL BE ANCHORED TO THE NEW 8" THICK CONCRETE MAT/SLAB WITH SIMPSON STRONG-BOLT 2 STAINLESS STEEL WEDGE ANCHORS PLACED IN THE EXISTING HOLES AT THE BASE OF THE EQUIPMENT PER THE TABLES BELOW:

SIMPSON STAINLESS STEEL STRONG-BOLT 2

| PRE-DRILLED HOLE SIZE IN EQUIP. BASE | ANCHOR SIZE | MIN. HOLE DEPTH | NOMINAL EMBED. DEPTH | TORQUE (FT. LB.) |
|---|---|---|---|---|
| 0.69" DIAM. | 5/8" DIAM. | 5" | 4-3/8 " | 80 |

ALL ANCHORS SHALL BE STANLESS STEEL SIMPSON STRONG-BOLT 2 EXPANSION ANCHORS INSTALLED PER ICC-ESR - 3037 w/ SPECIAL INSPECTION REQUIRED BY A LICENSED DEPUTY INSPECTOR

THE CONTRACTOR SHALL LOCATE ALL EXISTING SLAB HORIZONTAL REINFORCING STEEL PRIOR TO DRILLING FOR EXPANSION ANCHORS TO AVOID DAMAGING SLAB REINF. STEEL.

UNDERGROUND SERVICE ALERT
CALL BEFORE YOU DIG
CALL :TOLL FREE 1-800-227-2600
TWO WORKING DAYS BEFORE YOU DIG

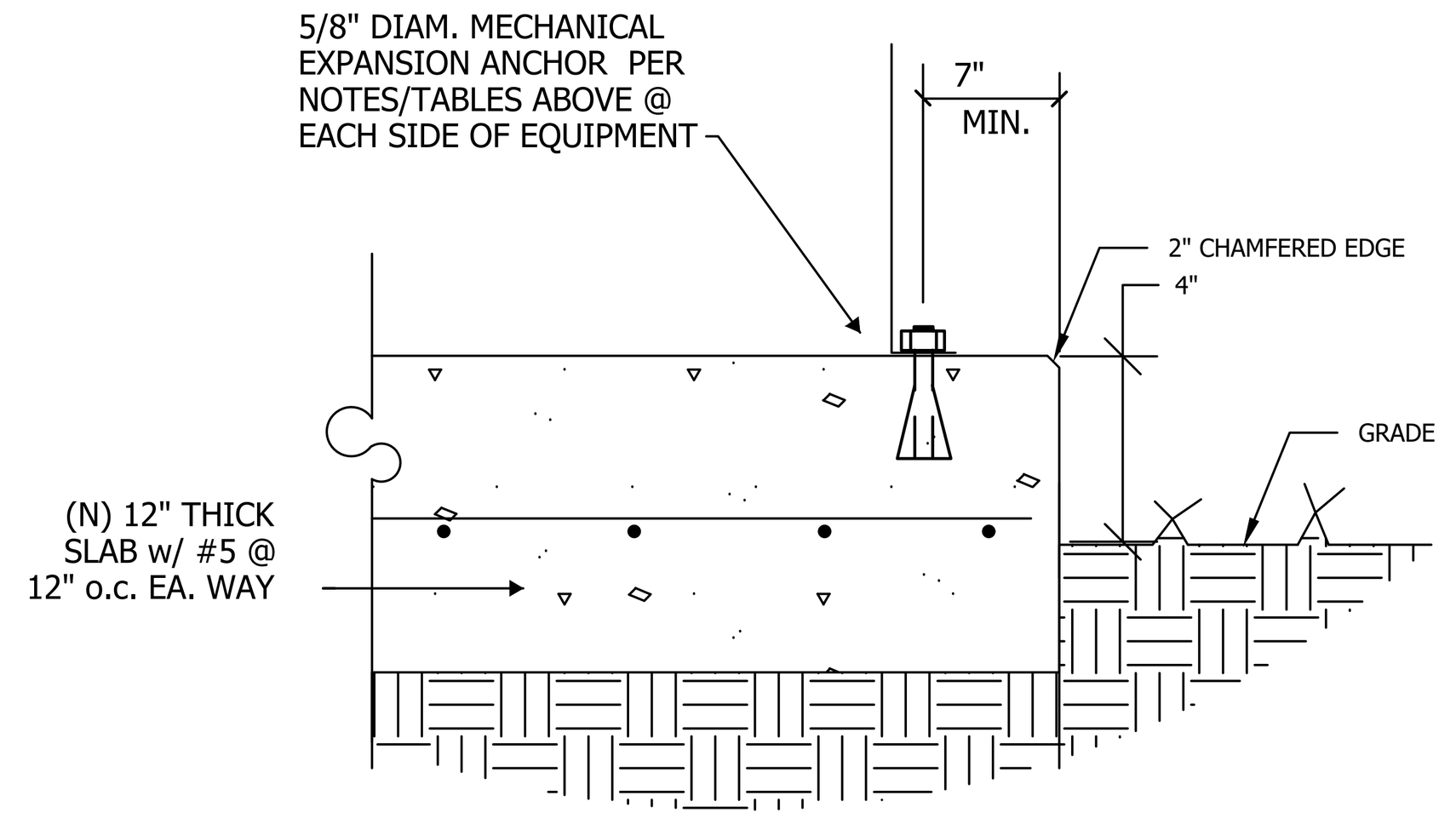


EQUIPMENT INSTALLATION 3
SCALE: NTS - E601

NO DSA REVIEW REQUIRED PER DSA IR-A-22.

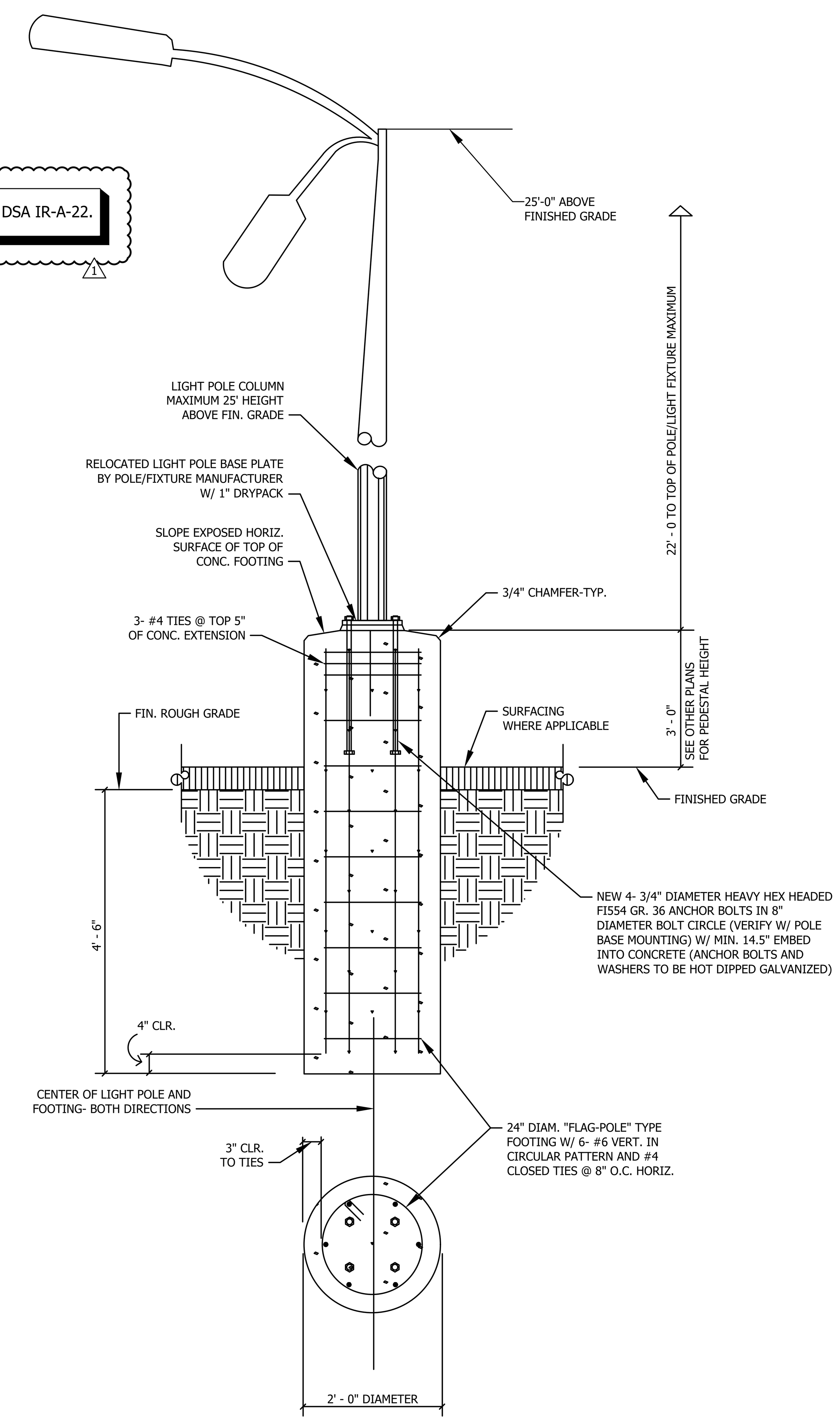


PLAN VIEW

POLE BASE DETAIL 1
SCALE: NONE - E601

DIVISION OF THE STATE ARCHITECT

AMADOR WHITTLE ARCHITECTS, INC.
28328 AGOURA ROAD, SUITE 203
AGOURA HILLS, CA 91301
(805) 530-3938 , (818) 874-0071

Ventura County Community College

PROJECT TITLE
# MOORPARK COLLEGE ADMINISTRATION BUILDING RENOVATION

7075 CAMPUS ROAD
MOORPARK, CA 91320

CONSULTANT
LUCCI & ASSOCIATES INC.
CONSULTING ELECTRICAL ENGINEERS
3251 CORTE MALPASO, #511
CAMARILLO, CA 93012-8094
(805) 389-6520 FAX (805) 389-6519

LUCCI & ASSOCIATES, INC. reserve their commonlaw copyright and other property rights in these plans. These plans and drawings are not to be reproduced, changed, or copied in any form or manner whatsoever without first obtaining the expressed written permission and consent of LUCCI & ASSOC. INC nor are they to be assigned to any third party without obtaining said written permission and consent.

STAMPS/SEALS
REGISTERED PROFESSIONAL ENGINEER KENNETH W. LUCCI No. E8340 Exp. 09/30/2026 ELECTRICAL STATE OF CALIFORNIA

12/08/2023 - DSA RESUBMITTAL
1 ADDENDUM 1, 03-13-2025

SHEET TITLE:
ELECTRICAL DETAILS

| | | | |
|---|---|---|---|
| PROJECT NO.: | 21-MPC-040 | PROJECT ARCH: | |
| DRAWN: | LK/DS | CHECKED: | |

SHEET NUMBER:
E601
6/04/2024 UPDATE
DATE: 12/08/23 SHEET: ____ OF ____

Copyright Lucci and Associates Consulting Electrical Engineers. Deviations from this drawing will not be made without their expressed written permission.
IF THIS SHEET IS NOT 30" X 42", IT IS NOT FULL SIZE, SCALE ACCORDINGLY
L.A.I.# 21-375
Drafter: CM01: G:\21\375\EL\Sheets\21-375E601.dwg; DATE: MAR 13, 2025 TIME: 1:47 PM