VENTURA COMMUNITY COLLEGE STEM MODULAR BUILDING

VENTURA COUNTY COMMUNITY COLLEGE DISTRICT

4667 TELEGRAPH ROAD
VENTURA, CA 93003

SUBMITTAL: DSA V3 SUBMITTAL

DATE: MARCH 21, 2025

SCOPE OF WORK

AMS -
1. CONSTRUCT ONE 2,880 SF MODULAR BUILDING (PER PC A#03-122051).
2. DELIVER, SET AND ASSEMBLE MODULAR BUILDING.

GENERAL CONTRACTOR -
1. DEMOLISH AND CLEAR SITE AS INDICATED.
2. CONSTRUCT CONCRETE FOUNDATIONS, INCLUDING ANCHORAGE EMBEDS, VENT AND ACCESS WELLS AND GRATES. NOTE: ANCHORAGE EMBEDS, VENT AND ACCESS GRATES AND FRAMES TO BE PURCHASED FROM AMS.
3. CONSTRUCT CRAWLSPACE MUD SLAB AND VAPOR BARRIER.
4. CONSTRUCT SITE WORK INCLUDING WALLS, PAVING, AND LANDSCAPING AS INDICATED.
5. CONSTRUCT UTILITIES TO BUILDING POINTS OF CONNECTION (POC) AS INDICATED.
6. CONSTRUCT ELECTRICAL SYSTEMS AS INDICATED.
7. CONSTRUCT LOW VOLTAGE SYSTEMS, INCLUDING FIRE ALARM, WITHIN BUILDING AS INDICATED.

PROJECT TEAM

ARCHITECT
AMADOR ARCHITECTURE
28328 AGOURA RD. #203
AGOURA HILLS, CA 93021
(805) 530 - 3938
BILL@AMADOR.TEAM

CIVIL ENGINEER
MOLLENHAUER GROUP CIVIL, INC.
919 W. GLENOAKS BLVD.
GLENDALE, CA 91202
(213) 624-2661
TTRAN@MOLLENHAUERGROUP.COM

MECHANICAL PLUMBING ENGINEER
AE GROUP MECHANICAL ENGINEERS, INC.
838 EAST FRONT ST.
VENTURA, CA 93001
(805) 653-1722
HUGH@AEGROUPME.COM

LANDSCAPE ARCHITECT
JORDAN - GILBERT LANDSCAPE ARCHITECTS, INC.
459 N. VENTURA AVE.
VENTURA, CA 93001
(805) 642-3641
PAUL@JORDAN-GILBERT.COM

STRUCTURAL ENGINEER
ORION STRUCTURAL GROUP, INC.
223 EAST THOUSAND OAKS BLVD., STE. 304
THOUSAND OAKS, CA 91360
(805) 390-9242
WILL@ORIONSTRUCTURAL.COM

ELECTRICAL ENGINEER
LUCCI & ASSOCIATES, INC.
3251 CORTE MALPASO, STE. 511
CAMARILLO, CA 93012
(805) 389-6520
KEN@LUCCILAND.COM

VICINITY MAP

DRAWING LIST

GENERAL
G000 TITLE SHEET
G001 GENERAL NOTES & ABBREVIATIONS
G002 GENERAL NOTES & ABBREVIATIONS
G003 SITE PLAN - FIRE AUTHORITY
G004 CODE & EGRESS ANALYSIS PV SYSTEM CALC-CLIMATE ZONE 6

CIVIL
C1.0 NOTES AND LEGEND
C2.0 DEMOLITION PLAN
C3.0 GRADING PLAN
C4.0 UTILITY PLAN SANITARY SEWER AND STORM DRAIN
C4.1 UTILITY PLAN WATER
C5.0 DETAILS
C5.1 DETAILS
C6.0 EROSION CONTROL PLAN

LANDSCAPE
L1.1 IRRIGATION PLAN
L1.2 IRRIGATION LEGEND AND NOTES
L2.1 PLANTING PLAN
L3.1 LANDSCAPE DETAILS

ARCHITECTURAL
A100 CAMPUS SITE PLAN & STUDENT DROP OFF SITE PLAN
A101 DEMOLITION SITE PLAN
A102 SITE PLAN
A103 COORDINATION FOUNDATION / UTILITY PLAN
A111 FLOOR PLAN
A201 BUILDING EXTERIOR ELEVATIONS
A202 SITE EXTERIOR ELEVATIONS
A400 SITE, BUILDING SECTIONS
A401 STAIR #1 & RAMP #1 PLAN AND SECTIONS
A402 ENLARGED SITE PLAN, PARKING PLAN
A403 RAMP & STAIR SECTIONS
A501 SITE DETAILS
A502 DETAILS
A801 SIGNAGE PLAN AND SCHEDULE
A802 SIGNAGE DETAILS

STRUCTURAL
S000 GENERAL NOTES
S010 TYPICAL DETAILS
S011 TYPICAL DETAILS
S012 TYPICAL DETAILS
S103 PARTIAL FOUNDATION PLAN

MECHANICAL
M101 MECHANICAL NOTES, SCHEDULE, PLAN & DETAILS

PLUMBING
P101 PLUMBING NOTES & SCHEDULE
P301 PLUMBING PLAN AND DETAILS

ELECTRICAL
E100 GENERAL NOTES, ABBREVIATIONS, SYMBOLS & DRAWING LIST
E101 CALIFORNIA GREEN CODE ELECTRICAL
E130 SITE LIGHTING PLAN EXISTING CONDITION
E131 SITE LIGHTING PLAN NEW WORK
E132 STEM MODULAR EM PHOTOMETRIC PLAN & SITE PHOTOMETRIC PLAN
E140 SITE POWER & COM PLAN
E200 ELECTRICAL SINGLE LINE DIAGRAM - EXISTING WITH NEW WORK
E300 LIGHTING FIXTURE SCHEDULE & SCHEMATIC PLAN
E400 BUILDING POWER & COM PLAN
E420 MECHANICAL POWER PLAN, NOTES & SCHEDULE
E500 FIRE ALARM NOTES & SCHEDULE
E501 FIRE ALARM PLAN
E502 FIRE ALARM DETAIL SHEET
E503 FIRE ALARM DATA SHEETS
E504 FIRE ALARM DATA SHEETS
E506 FIRE ALARM RISER DIAGRAM, VOLTAGE DROP, AND BATTERY CALCULATION
E507 FIRE ALARM DATA SHEETS
E508 FIRE ALARM DATA SHEETS
E509 FIRE ALARM DATA SHEETS
E510 FIRE ALARM DATA SHEETS
E601 ELECTRICAL DETAILS
E604 LIGHT POLE FOOTING DETAIL

AMS 72' x 40' BUILDING
PC A#03-122051
SITE SPECIFIC SHEETS

ARCHITECTURAL
TS-2-M SHEET INDEX

N3.0-M TYPICAL SCHEDULES - DOORS, WINDOWS & FINISHES

A1.0-M TYPICAL FLOOR PLAN
A1.2-M RESTROOM & JANITOR FLOOR PLAN AGE RANGE 13-ADULT
A4.0-M INTERIOR ELEVATIONS TYPICAL CLASSROOM
A4.0-M.A INTERIOR ELEVATIONS TYPICAL CLASSROOM
A4.1-M RESTROOM INTERIOR ELEVATIONS
A5.6-M TYPICAL EXTERIOR ELEVATIONS - SYNTHETIC STUCCO OPTION

STRUCTURAL
S1.1-M CONCRETE FOUNDATION (50 PSF LIVE LOAD +15 PSF PARTITION LOAD)
S1.4-M CONCRETE FOUNDATION DETAILS
S1.5-M CONCRETE FOUNDATION DETAILS
S4.1-M ROOF FRAMING PLAN & DETAILS ROOF SHEATHING OPTION
S4.1A-M ROOF FRAMING PLAN & DETAILS

MECHANICAL
M1.0-M TYPICAL REFLECTED CEILING PLAN
M1.1A-M TYPICAL MECHANICAL PLAN

ELECTRICAL
E1.0-M TYPICAL ELECTRICAL PLAN
E1.2-M ELECTRICAL NOTES & DETAILS

PLUMBING
P1.0-M RESTROOM OPTIONS PLUMBING PLAN & FIXTURE SCHEDULE

AMS 72' x 40' BUILDING
PC A#03-122051

ARCHITECTURAL
TS TITLE SHEET

TS-2 SHEET INDEX

D1 FORM DSA-103
D2 FORM DSA-103

N1.0 GENERAL NOTES & SPECIFICATIONS
N1.0A BELOW GRADE CONCRETE MIX DESIGN REQUIREMENTS
N2.0 GENERAL NOTES & SPECIFICATIONS
N3.0 TYPICAL SCHEDULES - DOORS, WINDOWS & FINISHES
N4.0 ACCESSIBILITY STANDARDS AND DETAILS
N5.0 MULTIPLE FLOOR PLAN CONFIGURATIONS

EN.1A ENERGY CALCULATIONS - SUMMATION SHEETS
EN.1B ENERGY CALCULATIONS - SUMMATION SHEETS
EN.1C ENERGY CALCULATIONS - SUMMATION SHEETS
EN.40 ENERGY CALCULATIONS 72'x40' BUILDING GROUP "C"
EN.41 ENERGY CALCULATIONS 72'x40' BUILDING GROUP "C"
EN.42 ENERGY CALCULATIONS 72'x40' BUILDING GROUP "C"
EN.94 ENERGY CALCULATIONS SUPPLEMENTAL SHEET
EN.95 ENERGY CALCULATIONS SUPPLEMENTAL SHEET
EN.96 ENERGY CALCULATIONS SUPPLEMENTAL SHEET
EN.97 ENERGY CALCULATIONS SUPPLEMENTAL SHEET

A1.0 TYPICAL FLOOR PLAN
A1.2 RESTROOM & JANITOR FLOOR PLAN AGE RANGE 13-ADULT
A2.0 TYPICAL ROOF PLAN METAL STANDING SEAM (WITHOUT PARAPETS)
A2.2 TYPICAL ROOF DETAILS METAL STANDING SEAM
A4.0 INTERIOR ELEVATIONS TYPICAL CLASSROOM
A4.1 INTERIOR ELEVATIONS RESTROOM OPTIONS
A5.5 TYP. ARCHITECTURAL DETAILS - LAP SIDING OPTION
A5.5A DETERIORATION DETAILS GREATER THAN 2160 SQ. FT. - LAP SIDING OPTION
A5.6 TYPICAL EXTERIOR ELEVATIONS - SYNTHETIC STUCCO OPTION
A5.7 TYPICAL ARCHITECTURAL DETAILS - SYNTHETIC STUCCO OPTION
A5.7A DETERIORATION DETAILS GREATER THAN 2160 SQ. FT. - SYNTHETIC STUCCO OPTION
A7.1 MISCELLANEOUS ARCHITECTURAL DETAILS
A7.3 TYPICAL LONGITUDINAL AND TRANSVERSE FRAME SECTIONS

STRUCTURAL
S0.0 STEEL MEMBER PROPERTIES
S1.1 CONCRETE FOUNDATION (50 PSF LIVE LOAD +15 PSF PARTITION LOAD)
S1.4 CONCRETE FOUNDATION DETAILS
S1.5 CONCRETE FOUNDATION DETAILS
S1.6B UPGRADED ANCHORAGE FOUNDATION DETAILS
S1.7 CONCRETE FOUNDATION OPTIONAL UTILITY OPENINGS IN FOOTINGS
S3.3 FLOOR FRAMING PLAN & DETAILS FOR CONCRETE FLOOR w/3WxH-DECK OPTION (150 PSF MAX FLOOR L.L.)
S4.1 ROOF FRAMING PLAN DETAILS ROOF SHEATHING OPTION
S4.3 ROOF FRAMING DETAILS ROOF SHEATHING OPTION
S5.0 MOMENT FRAME ELEVATIONS & DETAILS
S5.1 MOMENT FRAME CONNECTION DETAILS
S8.0 WALL FRAMING ELEVATIONS & SCHEDULES - WOOD STUDS
S8.1 WALL FRAMING DETAILS - WOOD STUDS
S9.0 WALL FRAMING ELEVATIONS & SCHEDULES - METAL STUD OPTION
S9.1 WALL FRAMING DETAILS - METAL STUD OPTION
S9.2 TYPICAL METAL STUD FRAMING DETAILS & PROPERTIES

MECHANICAL
M1.0 TYPICAL REFLECTED CEILING PLAN
M1.1A TYPICAL MECHANICAL PLAN
M1.4 MECHANICAL AND CEILING DETAILS
M1.4A MECHANICAL AND CEILING DETAILS
M1.5 MECHANICAL & CEILING DETAILS
M1.5A CEILING & MECHANICAL DETAILS
M1.6 MECHANICAL ROOF DETAILS
M1.7 CEILING NOTES, SPECIFICATIONS AND MINIMUM INSULATION SCHEDULES
M1.7A MECHANICAL NOTES & SCHEDULES

ELECTRICAL
E1.0 TYPICAL ELECTRICAL PLAN
E1.2 ELECTRICAL NOTES & DETAILS

PLUMBING
P1.0 RESTROOM OPTIONS PLUMBING PLAN & FIXTURE SCHEDULE
P2.0 PLUMBING DETAILS & ACCESSIBLE DETAILS
P3.0 PLUMBING ISOMETRIC DRAWINGS

Grand total: 143

IDENTIFICATION STAMP
DIV. OF THE STATE ARCHITECT
APP: 03-124589 INC:
REVIEWED FOR
SS ☑ FLS ☑ ACS ☑
DATE: 04/15/2025

VENTURA COUNTY COMMUNITY COLLEGE DISTRICT

761 EAST DAILY DRIVE
CAMARILLO, CALIFORNIA 93010
TEL: (805) 652-5500

PROJECT TITLE AND SCHOOL LOCATION

VENTURA COMMUNITY COLLEGE STEM MODULAR BUILDING
VENTURA COMMUNITY COLLEGE
4667 TELEGRAPH RD.
VENTURA, CA 93003

COMMISSIONED ARCHITECT

AMADOR

amador whitte architects, inc.
28328 AGOURA RD, 203 | AGOURA HILLS CA, 91301 | 805-558-4334

CONSULTANT

STAMPS/SEALS

LICENSED ARCHITECT
WILLIAM DODGE AMADOR
C-20348
JANUARY 31, 2027
RENEWAL DATE
STATE OF CALIFORNIA

DSA V3 SUBMITTAL 03/21/2025

SHEET TITLE:

TITLE SHEET

PROJECT NO. 22-VCCCD-08	PROJECT ARCH: BA
DRAWN: FBG / LM / PVP	CHECKED: BA

SHEET NUMBER:

G000

DATE: 9/3/24 SHEET: ___ OF ___

ABBREVIATIONS

&	AND
(E)	EXISTING
@	AT
A.B.	ANCHOR BOLT
A.C.	ASPHALTIC CONCRETE
A.F.F.	ABOVE FINISH FLOOR
A/C	AIR CONDITIONER
ACOUST	ACOUSTICAL
AL.	ALUMINUM
ALUM	ALUMINUM
ARCH	ARCHITECTURAL
B.O.C.	BOTTOM OF COPING
B.U.R.	BUILT UP ROOFING
BD	BOARD
BLDG	BUILDING
BLK	BLOCK OR BLOCKING
BOT	BOTTOM
C.I.	CAST IRON
C.J.	CEILING JOIST
C.L.	CHAIN LINK
C.L.F.	CHAIN LINK FENCE
C.M.U.	CONCRETE MASONRY UNIT
C.T.	CERAMIC TILE
CAB	CABINET
CER	CERAMIC
CLG	CEILING
CLO.	CLOSET
CLR	CLEAR
COL	COLUMN
CONC	CONCRETE
CONST	CONSTRUCTION
CONT	CONTINUOUS
d	PENNY
D.F	DOUGLAS FIR
DBL	DOUBLE
DEMO	DEMOLITION
DET	DETAIL
DIA.	DIAMETER
DIM	DIMENSION
DIV	DIVISION
DR	DOOR
DS	DOWNSPOUT
DWG	DRAWING
E.J.	EXPANSION JOINT
E.W.C.	ELECTRIC WATER COOLER
EA	EACH
ELEC	ELECTRICAL
EQ	EQUAL
EQUIP	EQUIPMENT
EXH	EXHAUST
EXIST	EXISTING
EXP	EXPANSION
EXT	EXTERIOR
F.D.	FLOOR DRAIN
F.E.	FIRE EXTINGUISHER
F.E.C.	FIRE EXTINGUISHER CABINET
F.F.	FINISH FLOOR
F.G	FINISH GRADE
F.H.C.	FIRE HOSE CABINET
F.O.C.	FACE OF CONCRETE
F.O.S.	FACE OF STUD
F.O.W.	FACE OF WALL
F.R.	FIRE RATED, FIRE RESISTANT
F.S.	FINISHED SURFACE
FIN	FINISH
FLR	FLOOR
FR.	FRAME
FT	FOOT OR FEET
FTG	FOOTING
G.I.	GALVANIZED IRON
G.W.B.	GYPSUM WALLBOARD
GA	GAUGE
GALV	GALVANIZED
GEN	GENERAL
GYP	GYPSUM
H.M.	HOLLOW METAL
HDB	HARDBOARD
HDR	HEADER

ABBREVIATIONS

HDW	HARDWARE
HI	HIGH
HT	HEIGHT
IN	INCHES
INFO	INFORMATION
INSUL	INSULATION
INT	INTERIOR
JAN	JANITOR
K.D.	KNOCK-DOWN
LAM	LAMINATE
LAV	LAVATORY
LBS	POUNDS
M.O.	MASONRY OPENING
M.R.	MOISTURE RESISTANT
MATL	MATERIAL
MAX	MAXIMUM
MECH	MECHANICAL
MFR	MANUFACTURER
MIN	MINIMUM
MISC	MISCELLANEOUS
MTL	METAL
N.I.C.	NOT IN CONTRACT
N.T.S.	NOT TO SCALE
N/A	NOT AVAILABLE
NO., #	NUMBER
O.C.	ON CENTER
OPNG	OPENING
OPP	OPPOSITE
PL	PLASTIC
PR	PAIR
PT	POINT
PWD	PLYWOOD
R	RISER
R.C.P.	REFLECTED CEILING PLAN
R.D.	ROOF DRAIN
R.O.	ROUGH OPENING
REF	REFERENCE
REFL	REFLECTED
REINF	REINFORCING
REQ'D	REQUIRED
REV	REVISION
RM	ROOM
S & P	SHELF AND POLE
S.F.	SQUARE FEET
S.S.	STAINLESS STEEL
SCHED	SCHEDULE
SECT	SECTION
SHT	SHEET
SIM	SIMILAR
SQ	SQUARE
STD	STANDARD
STL	STEEL
STOR	STORAGE
STRUCT	STRUCTURAL
SUSP	SUSPEND, SUSPENDED
T	TEMPERED
T & G	TONGUE AND GROOVE
T.O.C.	TOP OF CURB
T.O.P.	TOP OF PLATE
T.O.P.	TOP OF PARAPET
T.O.W.	TOP OF WALL
TEL	TELEPHONE
THK	THICK
TYP	TYPICAL
U.L.	UNDERWRITERS LABORATORIES
U.N.O.	UNLESS NOTED OTHERWISE
V.C.T.	VINYL COMPOSITION TILE
V.I.F.	VERIFY IN FIELD
VERT	VERTICAL
VEST	VESTIBULE
W.C.	WATER CLOSET
W.H.	WATER HEATER
W.R.	WATER RESISTANCE
W.W.M.	WELDED WIRE MESH
W/	WITH
WD	WOOD
WDW	WINDOW

SYMBOL LEGEND

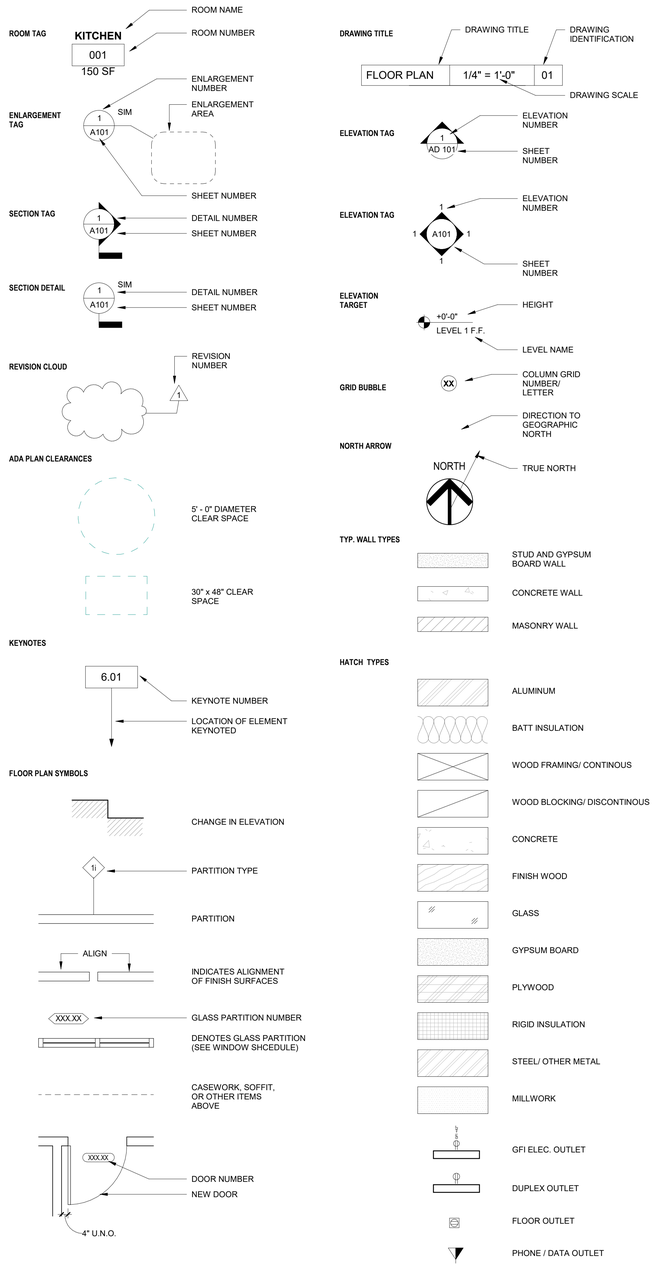

GENERAL ACCESSIBILITY NOTES

1. SYMBOL OF ACCESSIBILITY

A. THE INTERNATIONAL SYMBOL OF ACCESSIBILITY SHALL BE THE STANDARD USED TO IDENTIFY FACILITIES THAT ARE ACCESSIBLE TO AND USEABLE BY PHYSICALLY DISABLED PERSON AS SET FORTH IN THESE BUILDING STANDARDS AND AS SPECIFICALLY REQUIRED IN THIS SECTION. NOTE: SEE FIGURE 11B-703.7.2.1 BELOW.

B. COLOR OF SYMBOL: THE SYMBOL SPECIFIED ABOVE SHALL CONSIST OF A WHITE FIGURE ON A BLUE BACKGROUND. THE BLUE SHALL BE EQUAL TO COLOR NO. 15090 IN FEDERAL STANDARD 595C. EXCEPTION: THE APPROPRIATE ENFORCEMENT AGENCY MAY APPROVE SPECIAL SIGNS AND IDENTIFICATION NECESSARY TO COMPLEMENT DECOR OR UNIQUE DESIGN WHEN IT IS DETERMINED THAT SUCH SIGNS AND IDENTIFICATION PROVIDES ADEQUATE DIRECTION TO PERSONS WITH DISABILITY.

C. CONTRAST OF SYMBOL: CHARACTERS AND SYMBOLS SHALL CONTRAST WITH THEIR BACKGROUND, EITHER LIGHT CHARACTERS ON A DARK BACKGROUND OR DARK CHARACTERS ON A LIGHT BACKGROUND.

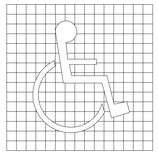

NOTE:
POST SIGNAGE AT SIDELIGHT
WINDOW TO ALL ENTRANCES
RFHSSD 5 X 5 DECAL - POSTED

PROPORTIONS

INTERNATIONAL SYMBOL OF ACCESSIBILITY

FIGURE 17-6

2. ENTRANCES

A. LATCHING AND LOCKING DOORS THAT ARE HAND ACTIVATED AND WHICH ARE IN A PATH OF TRAVEL, SHALL BE OPERABLE WITH A SINGLE EFFORT BY LEVER TYPE HARDWARE, PANIC BARS, PUSH-PULL ACTIVATING BARS, OR OTHER HARDWARE DESIGNED TO PROVIDE PASSAGE WITHOUT REQUIRING THE ABILITY TO GRASP THE OPENING HARDWARE.

B. HAND ACTIVATED DOOR OPENING HARDWARE SHALL BE CENTERED BETWEEN 34 INCHES AND 44-INCHES ABOVE THE FLOOR. PANIC HARDWARE TO BE MOUNTED ABOVE 34" TO 44"

C. THE FLOOR LANDING ON EACH SIDE OF AND ENTRANCE OR PASSAGE DOOR SHALL BE LEVEL AND CLEAR. THE LEVEL AND CLEAR AREA SHALL HAVE A LENGTH IN THE DIRECTION OF DOOR SWING OF AT LEAST 60-INCHES AND THE LENGTH OPPOSITE THE SWING OF 48-INCHES AS MEASURE AT RIGHT ANGLES TO THE PLANE OF THE DOOR IN ITS CLOSED POSITION.

D. THE FLOOR OR LANDING SHALL BE NO MORE THAN 1/2" LOWER THAN THE THRESHOLD OR THE DOORWAY. CHANGE IN LEVEL BETWEEN 1/4" AND 1/2" SHALL BE BEVELED WITH A SLOPE NO GREATER THAN 1:2.

E. MAXIMUM EFFORT TO OPERATE DOORS SHALL NOT EXCEED 5 LBS FOR EXTERIOR DOOR AND 5 LBS. FOR INTERIOR DOORS, SUCH PULL OR PUSH EFFORT BEING APPLIED AT RIGHT ANGLES TO HINGED DOORS AND AT THE CENTER PLANE OF SLIDING OF FOLDING DOORS. COMPENSATING DEVICES OR AUTOMATIC DOOR OPERATORS MAY BE UTILIZED TO MEET THE ABOVE STANDARDS. WHEN FIRE DOORS ARE REQUIRED, THE MAXIMUM EFFORT TO OPERATE THE DOOR MAY BE INCREASED AS AUTHORIZED BY AUTHORITY HAVING JURISDICTION, NOT TO EXCEED 15 LBS.

3. ACCESSIBLE ENTRANCES

A. ACCESSIBLE ENTRANCES TO THE BUILDING SHALL BE IDENTIFIED BY THE INTERNATIONAL SYMBOL OF ACCESSIBILITY AS REFERENCED HEREIN. SIGNS AT ENTRIES SHALL BE LOCATED SUCH THAT THEY ARE VISIBLE FROM THE MAIN APPROACH TO THE ENTRY.

4. SIGNS

A. ALL SIGNS (AT MAIN ENTRANCES, TOILETS, PERMANENT ROOMS, ASSISTIVE LISTENING SYSTEM(S) ETC. SHALL COMPLY WITH TITLE 24 AND SECTION 11B-216 AND 11B-703.

5. PATH OF TRAVEL

A. GATES IN PATH OF TRAVEL MUST COMPLY WITH EXIT DOOR REQUIREMENTS. (CBC 11B-206.5, 11B-404 AND ADA STANDARDS FOR ACCESSIBLE DESIGN, DEPARTMENT OF JUSTICE, SECTION 404). GATE HARDWARE SHALL NOT REQUIRE PINCHING, GRASPING, OR TWISTING MOTION TO OPERATE. PROVIDE SOLID KICK PLATES 10" MINIMUM HIGH. CLEAR SPACE BELOW GATE SHALL BE 3" MAXIMUM ABOVE PAVING ON BOTH SIDES OF THE GATE. THE MAXIMUM EFFORT TO OPERATE THE GATES SHALL NOT EXCEED 5 LBS.

B. HANDRAILS FOR STAIRS AND RAMPS SHALL BE PER APPROVED PLANS AND MOUNTED 1 1/2" MINIMUM FROM SIDE WALLS. CBC 11B-505. ALL WELDED JOINTS AND SURFACES SHALL BE GROUND SMOOTH, NO SHARP OR ABRASIVE CORNERS, EDGES OR SURFACES. WALL SURFACES ADJACENT TO HANDRAIL SHALL BE SMOOTH. CBC 11B.505.6 TO 11B.505.8.

C. "DESIGN PROFESSIONAL IN GENERAL RESPONSIBLE CHARGE STATEMENT: THE P.O.T. IDENTIFIED IN THESE CONSTRUCTION DOCUMENTS IS COMPLIANT WITH THE CURRENT APPLICABLE CALIFORNIA BUILDING CODE ACCESSIBILITY PROVISIONS FOR PATH OF TRAVEL REQUIREMENTS FOR ALTERATIONS, ADDITIONS AND STRUCTURAL REPAIRS. AS PART OF THE DESIGN OF THIS PROJECT, THE P.O.T. WAS EXAMINED AND ANY ELEMENTS, COMPONENTS OR PORTIONS OF THE P.O.T. THAT WERE DETERMINED TO BE NONCOMPLIANT 1) HAVE BEEN IDENTIFIED AND 2) THE CORRECTIVE WORK NECESSARY TO BRING THEM INTO COMPLIANCE HAS BEEN INCLUDED WITHIN THE SCOPE OF THIS PROJECT'S WORK THROUGH DETAILS, DRAWINGS AND SPECIFICATIONS INCORPORATED INTO THESE CONSTRUCTION DOCUMENTS. ANY NONCOMPLIANT ELEMENTS, COMPONENTS OR PORTIONS OF THE P.O.T. THAT WILL NOT BE CORRECTED BY THIS PROJECT BASED ON VALUATION THRESHOLD LIMITATIONS OR A FINDING OF UNREASONABLE HARDSHIP ARE SO INDICATED IN THESE CONSTRUCTION DOCUMENTS. DURING CONSTRUCTION, IF P.O.T. ITEMS WITHIN THE SCOPE OF THE PROJECT REPRESENTED AS CODE COMPLIANT ARE FOUND TO BE NONCONFORMING BEYOND REASONABLE CONSTRUCTION TOLERANCES, THEY SHALL BE BROUGHT INTO COMPLIANCE WITH THE CBC AS A PART OF THIS PROJECT BY MEANS OF A CONSTRUCTION CHANGE DOCUMENT." (DSA PR15-01)

D. ADA TOLERANCE NOTE: IN CASE WHERE SLOPE PERCENTAGES AND DIMENSIONS ARE IDENTIFIED ON THESE PLANS FOR ELEMENTS REGULATED BY THE AMERICAN DISABILITIES ACT AND CHAPTER 11B OF THE CALIFORNIA BUILDING CODE, THE SLOPE PERCENTAGES AND DIMENSIONS SHOWN MAY BE MORE STRINGENT THAN REQUIRED BY CODE. DIMENSIONS AND SLOPE GRADIENTS ALLOWED IN CHAPTER 11B OF THE CBC SHALL BE ACCEPTABLE AND DEEMED TO BE IN COMPLIANCE WITH THESE DOCUMENTS.

IDENTIFICATION STAMP
DIV. OF THE STATE ARCHITECT
APP: 03-124589 INC:
REVIEWED FOR
SS ☑ FLS ☑ ACS ☑
DATE: 04/15/2025

VENTURA COUNTY COMMUNITY COLLEGE DISTRICT
MOORPARK OXNARD VENTURA

VENTURA COUNTY COMMUNITY COLLEGE DISTRICT

761 EAST DAILY DRIVE
CAMARILLO, CALIFORNIA 93010
TEL: (805) 652-5500

PROJECT TITLE AND SCHOOL LOCATION

VENTURA COMMUNITY COLLEGE STEM MODULAR BUILDING

VENTURA COMMUNITY COLLEGE
4667 TELEGRAPH RD.
VENTURA, CA 93003

COMMISSIONED ARCHITECT

AMADOR

amador whitte architects, inc.
28328 AGOURA RD, 203 | AGOURA HILLS CA, 91301 | 805-558-4334

CONSULTANT

STAMPS/SEALS

LICENSED ARCHITECT
WILLIAM JORGE AMADOR
C-20348
JANUARY 31, 2027
RENEWAL DATE
STATE OF CALIFORNIA

△ △ △ △ DSA V3 SUBMITTAL 03/21/2025

SHEET TITLE:

GENERAL NOTES & ABBREVIATIONS

PROJECT NO: 22-VCCCD-08	PROJECT ARCH: Designer
DRAWN: Author	CHECKED: Checker
SHEET NUMBER: G001	
DATE: 9/3/24	SHEET: ___ OF ___

ENERGY NOTES

THE CALIFORNIA ENERGY CODE SECTION 10-103 REQUIRES ACCEPTANCE TESTING ON ALL NEWLY INSTALLED LIGHTING CONTROLS, MECHANICAL SYSTEMS, ENVELOPES, AND PROCESS EQUIPMENT AFTER INSTALLATION AND BEFORE PROJECT COMPLETION. AN ACCEPTANCE TEST IS A FUNCTIONAL PERFORMANCE TEST TO HELP ENSURE THAT NEWLY INSTALLED EQUIPMENT IS OPERATING AND IN COMPLIANCE WITH THE ENERGY CODE.

LIGHTING CONTROLS ACCEPTANCE TESTS MUST BE PERFORMED BY A CERTIFIED LIGHTING CONTROLS ACCEPTANCE TEST TECHNICIAN (ATT).

MECHANICAL SYSTEM ACCEPTANCE TESTS MUST BE PERFORMED BY A CERTIFIED MECHANICAL ATT FOR PROJECTS SUBMITTED ON OR AFTER OCTOBER 1, 2021.

ENVELOPE AND PROCESS EQUIPMENT ACCEPTANCE TESTS SHALL BE PERFORMED BY THE INSTALLING CONTRACTOR, ENGINEER/ARCHITECT OF RECORD OR THE OWNER'S AGENT.

A LISTING OF CERTIFIED ATT CAN BE FOUND AT: HTTPS://WWW.ENERGY.CA.GOV/PROGRAMS-AND-TOPICS/PROGRAMS/ACCEPTANCE-TEST-TECHNICIAN-CERTIFICATION-PROVIDER-PROGRAM/ACCEPTANCE.

THE ACCEPTANCE TESTING PROCEDURES MUST BE REPEATED, AND DEFICIENCIES MUST BE CORRECTED BY THE BUILDER OR INSTALLING CONTRACTOR UNTIL THE CONSTRUCTION/INSTALLATION OF THE SPECIFIED SYSTEMS CONFORM AND PASS THE REQUIRED ACCEPTANCE CRITERIA.

PROJECT INSPECTORS WILL COLLECT THE FORMS TO CONFIRM THAT THE REQUIRED ACCEPTANCE TESTS HAVE BEEN COMPLETED.

GENERAL NOTES

1. INTERPRETATION OF CONSTRUCTION DOCUMENTS
   A. ALL INFORMATION DEPICTED IN THESE DRAWINGS AND RELATIVE TO EXISTING CONDITIONS IS BASED ON THE BEST AVAILABLE DATA AT THE TIME THESE CONSTRUCTION DOCUMENTS WERE BEING EXCECUTED, BUT WITHOUT GUARANTEE OF ACCURACY. CONTRACTOR SHALL VERIFY ALL DIMENSIONS AND CONDITIONS AT JOB SITE AND SHALL REPORT ANY DISCREPANICES TO ARCHITECT PRIOR TO COMMENCING ANY WORK.

   B. THE CONTRACTOR IS RESPONSIBLE FOR ALL COSTS INCURRED RESULTING FROM THE REMOVAL OR REPLACEMENT OF WORK INSTALLED WITHOUT PROPER COORDINATION TO ALL OTHER TRADES, AND/OR PRIOR TO OBTAINING CLARIFICATION FROM THE ARCHITECT WHERE CONFLICTING INFORMATION EXISTS ON THE DRAWINGS.

   C. THE CONTRACTOR SHALL FURNISH ALL BIDDERS WITH A COMPLETE SET OF CONSTRUCTION DOCUMENTS, INCLUDING BUT NOT LIMITED TO DRAWINGS, SPECIFICATIONS AND ADDENDUMS.

   D. ALL BIDS AND LINE ITEM COSTS SUBMITTED BY THE CONTRACTOR IN CONJUNCTION WITH HIS SUBCONTRACTORS ARE CONSIDERED TO INCLUDE COMPLETE COORDINATION BETWEEN THE VARIOUS DISCIPLINES AS WELL AS ALL OTHER REQUIREMENTS OF THESE CONSTRUCTION DOCUMENTS, INCLUDING BUT NOT LIMITED TO CODE AND PUBLIC UTILITY REQUIREMENTS. FURTHER, WHERE THERE ARE CONFLICTING SOLUTIONS IN THE CONSTRUCTION DOCUMENTS AND BID OR LINE ITEM COST IS SUBMITTED BY THE CONTRACTOR WITHOUT ANY FORMAL WRITTEN REQUEST FOR CLARIFICATION PRIOR TO BID OPENING, ALL SUCH ITEMS WILL BE CONSIDERED TO INCLUDE THE MOST EXPENSIVE OF THE POSSIBLE SOLUTIONS DEPICTED IN THE CONSTRUCTION DOCUMENTS.

   E. MODIFICATIONS OF DETAILS OF CONSTRUCTION SHALL NOT BE MADE WITHOUT WRITTEN APPROVAL OF THE ARCHITECT AND DSA.

2. CONTRACTOR SHALL VISIT THE SITE TO INVESTIGATE AND VERIFY ALL DIMENSIONS AND EXISTING SITE CONDITIONS AT JOB SITE PRIOR TO START OF WORK.

3. ALL DIMENSIONS INDICATED ARE BELIEVED TO BE ACCURATE, BUT ARE NOT GUARANTEED TO BE SO. CONTRACTOR SHALL FIELD VERIFY ALL DIMENSIONS AND REPORT ANY DISCREPANCIES TO THE ARCHITECT. COORDINATE WITH EXISTING CONDITIONS WHERE INSUFFICIENT DETAIL DIMENSIONS ARE AVAILABLE. ALL DIMENSIONS ARE TO FINISHED FACE OF CONSTRUCTION OR CENTERLINE OF COLUMNS UNLESS NOTED OTHERWISE. DIMENSIONS NOTED AT "CLR" (CLEAR) ARE NOT ADJUSTABLE WITHOUT ARCHITECT'S APPROVAL.

4. DIMENSIONS SHOWN SHALL HAVE PREFERENCE OVER SCALE.

5. ALL ITEMS INCLUDING BUILDINGS SHOWN ARE NEW UNLESS NOTED AS EXISTING (E).

6. CONTRACTOR SHALL TAKE ALL PRECAUTIONARY MEASURES TO PROTECT EXISTING PIPELINES AND UTILITIES THAT ARE TO REMAIN IN SERVICE. CONTRACTOR SHALL VERIFY THAT THOSE PIPELINES AND UTILITIES TO BE REMOVED HAVE BEEN DISCONNECTED, SHUT DOWN OR ABANDONED PRIOR TO ATTEMPTING REMOVAL OR DEMOLITION IN A MANNER TO AVOID ANY DISRUPTION OF EXISTING FACILITIES.

7. CONTRACTOR SHALL PROTECT ALL SURFACES & FIXTURES TO REMAIN DURING DEMOLITION AND CONSTRUCTION.

8. ALL DAMAGE DONE TO EXISTING CONSTRUCTION AS A RESULT OF DEMOLITION OR INSTALLATION SHALL BE COMPLETELY REPAIRED BY CONTRACTOR AT NO COST TO OWNER. REPAIRED WORK SHALL MATCH EXISTING CONSTRUCTION.

9. CONTRACTOR SHALL REPAIR AND PATCH UP ALL DAMAGES TO EXISTING SURFACES CAUSED BY REMOVAL OF EXISTING EQUIPMENT ATTACHED TO EXISTING SURFACES. (CHALKBOARDS, BOOKSHELVES, TACKBOARDS, WALL HEATERS, PIPING, ETC.)

10. WHERE PATCHES ARE REQUIRED IN EXISTING, SURFACES ADJACENT MATERIAL SHALL BE MATCHED IN TEXTURE AND FINISH.

11. "DEMOLISH" AND "REMOVE" SHALL MEAN TO DEMOLISH, REMOVE FROM THE SITE AND DISPOSE OF IN A LEGAL MANNER UNLESS NOTED OTEHRWISE. TERMINATE PIPING BELOW SUBSTRATE FOR PATCHING. ELECTRICAL WIRE DISCONNECT SHALL BE AT THE SOURCE OF POWER.

12. CONTRACTOR TO HAVE ALL SALVAGE RIGHTS TO ALL DEMOLISHED COMPONENTS AND EQUIPMENT. SALVAGE RIGHTS TO BE REFLECTED IN THE BID PROPOSAL TO THE DISTRICT BY WAY OF A BID COST REDUCTION. THE DISTRICT DOES NOT WANT ANY DEMOLISHED COMPONENTS OR EQUIPMENT BACK.

13. CONTRACTOR SHALL THOROUGHLY CLEAN AND SECURE THE AREA OF CONSTRUCTION AFTER EACH DAY OF WORK. CONTRACTOR SHALL REMOVE AND DISPOSE OF ALL CONSTRUCTION DEBRIS OFF SITE.

14. LOCATIONS OF STRUCTURES, UNDERGROUND PIPELINES AND UTILITIES WERE OBTAINED FROM AVAILABLE RECORDS. THE CONTRACTOR SHALL FIELD VERIFY THE LOCATIONS AND ELEVATIONS OF ALL PIPELINES AND UTILITIES BEFORE COMMENCING DEMOLITON, EARTHWORK OR CONSTRUCTION WORK.

15. GENERAL CONTRACTOR SHALL VERIFY ALL SITE CONDITIONS PRIOR TO START OF CONSTRUCTION. ALL QUESTIONS SHALL BE SENT TO ARCHITECT.

16. ALL SALVAGEABLE MATERIALS AND EQUIPMENT TO BE REMOVED SHALL REMAIN THE SOLE PROPERTY OF THE OWNER. THE CONTRACTOR SHALL CONSULT WITH THE OWNER CONCERNING STORAGE AND/OR DISPOSAL OF SUCH EQUIPMENT. OWNER HAS FULL SALVAGE RIGHTS. ALL REMOVED MATERIALS OTHER THAN ITEMS TO BE SALVAGED, OR REUSED SHALL BECOME CONTRACTOR'S PROPERTY AND SHALL BE REMOVED FROM THE PROJECT SITE.

17. ALL WORK, INCLUDING REMOVAL OF EXISTING WORK, SHALL BE PERFORMED IN A MANNER THAT MINIMIZES THE AMOUNT OF NOISE, DUST, TRAFFIC AND/OR OTHER FORMS OF DISTURBANCES IN COMPLIANCE WITH ALL APPLICABLE CODES AND ORDINANCES SO THAT THE PUBLIC, STUDENTS AND STAFF, AS WELL AS OTHER OCCUPIED AREAS OF THE SCHOOL ARE SUBJECTED TO AS LITTLE DISRUPTION AS REASONABLY POSSIBLE.

18. ROUTES OF INGRESS AND EGRESS FOR MATERIALS AND WORKMEN, AND LIMITS OF THE PROJECT AREA WILL BE DESIGNATED BY THE OWNER. THE CONTRACTOR SHALL CONFINE HIS ACTIVITES WITHIN SUCH LIMITS. THE CONTRACTOR SHALL INSTALL AND MAINTAIN ADEQUATE SAFETY AND DUST BARRIERS IN THE SITE, ACROSS CORRIDORS AND ELSEWHERE AS REQUIRED.

19. SHUT DOWN OF EXISTING AND OPERATING PLUMBING, MECHANICAL AND ELECTRICAL SYSTEMS OR PORTIONS THEREOF SHALL BE COORDINATED IN ADVANCE WITH THE OWNER.

20. CONTRACTOR SHALL COORDINATE ALL WORK SHOWN ON THE ARCHITECTURAL DRAWINGS WITH THE SPECIFICATIONS AND THE WORK SHOWN ON THE MECHANICAL, PLUMBING, AND ELECTRICAL DRAWINGS. ANY DISCREPANCIES FOUND SHALL BE BROUGHT TO THE ATTENTION OF THE ARCHITECT IN WRITIING BEFORE PROCEEDING WITH ANY RELATED WORK.

21. CONTRACTOR SHALL BE RESPONSIBLE FOR THE FIRE RATING CONTINUITY OF STRUCTURE, WALLS, FLOOR AND CEILINGS INTERRUPTED BY THE WORK OF ALL TRADES. THIS INCLUDES, BUT IS NOT LIMITED TO, FIRE RATED ENCLOSURES AT THE CEILING AND WALLS OF CORRIDORS AND STORAGE ROOMS, DUCT SHAFTS.

22. PROVIDE ALL NECESSARY BLOCKING, BACKING AND FRAMING FOR LIGHT FIXTURES, ELECTRICAL UNITS, A/C EQUIPMENT, TOILET FIXTURES & ACCESSORIES, RAILINGS, GRAB BARS, AND ALL OTHERS REQUIRING SAME.

23. CEILING HEIGHT DIMENSIONS ARE FROM FINISH FLOOR TO FINISH FACE OF CEILING.

GENERAL NOTES

24. WHERE NEW WALLS ALIGNS WITH EXISTING WALL, PROVIDE SMOOTH INVISIBLE TRANSITION BETWEEN NEW AND EXISTING.

25. NEW GYPSUM BOARD FINISH SHALL BE 5/8" TYPE 'X' OR AS REQUIRED FOR UL FIRE-RATING AS INDICATED ON DRAWINGS.

26. GENERAL CONTRACTOR SHALL PROVIDE TEMPORARY EIGHT (8) FEET HIGH CHAIN LINK FENCE BARRICADES AT WORK AREAS, DISTRICT APPROVED STORAGE AREAS AND WHEREVER NECESSARY TO MAINTAIN A SAFE PASSAGE AND SAFE ENVIRONMENT.

27. BEFORE PROCEEDING WITH THE CORING OR CUTTING OF WALLS AND FLOORS, ETC., THE CONTRACTOR SHALL PREPARE LAYOUT OF CUTTING OR CORING AND SHALL HAVE THE APPROVAL BY THE STRUCTURAL ENGINEER AND THE D.S.A. FIELD DISTRICT ENGINEER IN ORDER TO PROCEED WITH THE CUTTING OR CORING.

28. SAW-CUT EXISTING A.C. PAVING AND /OR CONCRETE FLOOR SLAB AS REQUIRED FOR NEW PIPE INSTALLATION AND NEW DEPRESSED CONCRETE SLAB, AND REPAIR TO MATCH EXISTING.

29. STRENGTH OF CONCRETE
    A) SLABS ON EARTH, SIDEWALKS AND CURBS: 3,000 PSI AT 28 DAYS
    B) FOUNDATIONS: 3,000 PSI AT 28 DAYS

30. THE CONTRACTOR SHALL NOT COMMENCE THE WORK, IN PART OR IN FULL, PRIOR TO OBTAINING THE NOTICE-TO-PROCEED (NTP) FROM THE OWNER REP.

31. IN CASE OF CONFLICT, THE MORE EXPENSIVE CONSTRUCTION MEANS AND METHOD SHALL BE USED.

32. THE PROVISIONS OF CFC CHAPTER 14 AND CBC CHAPTER 33 SHALL BE ENFORCED ON THIS PROJECT.

33. THE INFORMATION CONTAINED IN THESE CONSTRUCTION DOCUMENTS ARE TO BE FIELD VERIFIED PRIOR TO THE COMMENCEMENT OF CONSTRUCTION.

34. UNLESS SPECIFICALLY NOTED OTHERWISE IN THESE DRAWINGS, ALL EXISTING CONDITIONS SHALL REMAIN AS-IS.

DSA GENERAL NOTES

1. THE INTENT OF THESE DRAWINGS AND SPECIFICATIONS IS THAT THE WORK OF THE ALTERATION, REHABILITATION OR RECONSTRUCTION IS TO BE IN ACCORDANCE WITH TITLE 24, CALIFORNIA CODE OF REGUALTIONS. SHOULD ANY EXISTING CONDITIONS SUCH AS DETERIORATION OR NON-COMIPLYING CONSTRUCTION BE DISCOVERED WHICH IS NOT COVERED BY THE CONTRACT DOCUMENTS WHEREIN THE FINISHED WORK WILL NOT COMLPY WITH TITLE 24, CALIFORNIA CODE OF REGULATIONS, A CONSTRUCTION CHANGE DOCUMENT (CCD), OR A SEPARATE SET OF PLANS AND SPECIFICATIONS, DETAILING AND SPECIFYING THE REQUIRED WORK SHALL BE SUBMITTED TO AND APPROVED BY THE DIVISION OF THE STATE ARCHITECT BEFORE PROCEEDING WITH THE WORK.

2. A 'DSA CERTIFIED' PROJECT INSPECTOR WITH CLASS 3 CERTIFICATION FOR ON-SITE WORK, CLASS 3 & RBIP FOR MODULAR CONSTRUCTION IN FACTORY IS REQUIRED FOR THIS PROJECT.

3. A DSA ACCEPTED TESTING LABORATORY DIRECTLY EMPLOYED BY THE OWNER SHALL CONDUCT ALL THE REQUIRED TESTS AND INSPECTIONS FOR THE PROJECT.

4. GRADING PLANS, DRAINAGE IMPROVEMENTS, ROAD AND ACCESS REQUIREMENTS AND ENVIRONMENTAL HEALTH CONSIDERATIONS SHALL COMPLY WITH ALL LOCAL ORDINANCES.

5. ALL WORK SHALL CONFORM TO 2022 EDITION TITLE 24, CALIFORNIA CODE OF REGULATIONS (CCR).

6. CHANGES TO THE APPROVED DRAWINGS AND SPECIFICATIONS SHALL BE MADE BY ADDENDA OR CONSTRUCTION CHANGE DOCUMENT (CCD) APPROVED BY THE DIVISION OF THE STATE ARCHITECT, AS REQUIRED BY SECTION 4-338, PART 1, TITLE 24, CCR.

7. A 'DSA CERTIFIED' PROJECT INSPECTOR EMPLOYED BY THE DISTRICT (OWNER) AND APPROVED BY THE DIVISION OF STATE ARCHITECT SHALL PROVIDE CONTINUOUS INSPECTION OF THE WORK. THE DUTIES OF THE INSPECTOR ARE DEFINED IN SECTION 4-342, CALIFORNIA BUILDING STANDARDS ADMINISTRATIVE CODE (PART 1, TITLE 24, CCR).

8 WORK SHALL COMPLY WITH THE PROVISIONS OF CHAPTER 33 OF CBC & CFC, "FIRE SAFETY DURING CONSTRUCTION AND DEMOLITION"

GREEN BUILDING NOTES

1. ESTABLISH A CONSTRUCTION WASTE MANAGEMENT PLAN FOR THE DIVERTED MATERIALS, OR MEET LOCAL CONSTRUCTION AND DEMOLITION WASTE MANAGEMENT ORDINANCE, WHICHEVER IS MORE STRINGENT. CGBSC 5.408.1
2 WHERE A LOCAL JURISDICTION DOES NOT HAVE A CONSTRUCTION AND DEMOLITION WASTE MANAGEMENT ORDINANCE, SUBMIT A CONSTRUCTION WASTE MANAGEMENT PLAN FOR APPROVAL BY THE ENFORCEMENT AGENCY THAT: 1.IDENTIFIES THE MATERIALS TO BE DIVERTED FROM DISPOSAL BY EFFICIENT USAGE, RECYCLING, REUSE ON THE PROJECT OR SALVAGE FOR FUTURE USE OR SALE. 2. DETERMINES IF MATERIALS WILL BE SORTED ON-SITE OR MIXED. 3. IDENTIFIES DIVERSION FACILITIES WHERE MATERIAL COLLECTED WILL BE TAKEN. 4. SPECIFIES THAT THE AMOUNT OF MATERIALS DIVERTED SHALL BE CALCULATED BY WEIGHT OR VOLUME, BUT NOT BY BOTH. CGBSC 5.408.2
3. DOCUMENTATION SHALL BE PROVIDED TO THE ENFORCING AGENCY WHICH DEMONSTRATES COMPLIANCE WITH SECTION 5.408.2, ITEMS 1 THRU 4. THE WASTE MANAGEMENT PLAN SHALL BE UPDATED AS NECESSARY AND SHALL BE ACCESSIBLE DURING CONSTRUCTION FOR EXAMINATORY BY THE ENFORCING AGENCY. CGBSC 5.408.2.1
4. RECYCLE AND OR SALVAGE FOR REUSE A MINIMUM OF 50 PERCENT OF THE NON-HAZARDOUS CONSTRUCTION AND DEMOLITION DEBRIS, OR MEET LOCAL CONSTRUCTION AND DEMOLITION WASTE MANAGEMENT ORDIANCE, WHICHEVER IS MORE STRINGENT. CALCULATE THE AMOUNT OF MATERIALS DIVERTED BY WEIGHT OR VOLUME, BUT NOT BY BOTH. EXCEMPTIONS: 1. EXCAVATED SOIL AND LAND-CLEARING DEBRIS 2. ALTERNATE WASTE REDUCTION METHODS DEVELOPED BY WORKING WITH LOCAL AGENCIES IF DIVERSION OR RECYCLE FACILITIES CAPABLE OF COMPLIANCE WITH THIS ITEM DO NOT EXIST. CGBSC 5.408.4

APPLICABLE CODES

LIST OF 2022 CALIFORNIA CODE OF REGULATIONS (C.C.R.):
APPLICABLE CODE AS OF JANUARY 1, 2023

PART 1- 2022 CALIFORNIA ADMINISTRATIVE CODE (CAC), TITLE 24 C.C.R.

PART 2- 2022 CALIFORNIA BUILDING CODE (CBC), TITLE 24 C.C.R.

PART 3- 2022 CALIFORNIA ELECTRICAL CODE (CEC), TITLE 24 C.C.R.

PART 4- 2022 CALIFORNIA MECHANICAL CODE (CMC), TITLE 24 C.C.R.

PART 5- 2022 CALIFORNIA PLUMBING CODE (CPC), TITLE 24 C.C.R.

PART 6- 2022 CALIFORNIA ENERGY CODE, TITLE 24 C.C.R.

PART 9- 2022 CALIFORNIA FIRE CODE (CFC), TITLE 24 C.C.R.

PART 10- 2022 CALIFORNIA EXISTING BUILDING CODE (CEBC), TITLE 24 C.C.R.

PART 11- 2022 CALIFORNIA GREEN BUILDING STANDARDS CODE (CALGREEN), TITLE 24 C.C.R.

PART 12- 2022 CALIFORNIA REFERENCE STANDARDS CODE, TITLE 24 C.C.R.
TITLE 19 C.C.R., PUBLIC SAFETY, STATE FIRE MARSHAL REGULATIONS

PARTIAL LIST OF APPLICABLE STANDARDS

FOR A LIST OF APPLICABLE STANDARDS, INCLUDING CALIFORNIA AMENDMENTS TO THE NFPA STANDARDS, REFER TO CBC CHAPTER 35 AND CFC CHAPTER 80.

NFPA 17	DRY CHEMICAL EXTINGUISHING SYSTEMS	2021 EDITION
NFPA 24	PRIVATE FIRE SERVICE MAINS (CALIFORNIA AMENDED)	2019 EDITION
NFPA 72	NATIONAL FIRE ALARM CODE	2022 EDITION
	(CALIFORNIA AMENDED) (NOTE: SEE UL STANDARD 1971 FOR "VISUAL DEVICES")	2022 EDITION
NFPA 80	FIRE DOOR AND OTHER OPENING PROTECTIVES	2019 EDITION
NFPA 253	CRITICAL RADIANT FLUX OF FLOOR COVERING SYSTEMS	2019 EDITION
NFPA 2001	CLEAN AGENT FIRE EXTINGUISHING SYSTEMS	2018 EDITION
UL 464	AUDIBLE SIGNALING DEVICES FOR F.A. AND SIGNAL SYSTEMS	2003 EDITION
UL 521	HEAT DETECTORS FOR FIRE PROTECTIVE SIGNAL SYSTEMS	1999 EDITION
UL 1971	STANDARD FOR SIGNALING DEVICES FOR THE HEARING IMPAIRED	2002 (R2010)

STATEMENT OF GENERAL CONFORMANCE

FOR ARCHITECTS/ENGINEERS WHO UTILIZE PLANS, INCLUDING BUT NOT LIMITED TO SHOP DRAWINGS, PREPARED BY OTHER LICENSED DESIGN PROFESSIONALS AND/OR CONSULTANTS.

THESE DRAWINGS OR SHEETS LISTED ON THE INDEX SHEET (AMERICAN MODULAR SYSTEMS BUILDING DRAWING LIST: TS-2-M TO P3.0) HAVE BEEN PREPARED BY OTHER DESIGN PROFESSIONALS OR CONSULTANTS WHO ARE LICENSED AND/OR AUTHORIZED TO PREPARE SUCH DRAWINGS IN THIS STATE. IT HAS BEEN EXAMINED BY ME FOR :

1. DESIGN INTENT AND APPEARS TO MEET THE APPROPRIATE REQUIREMENTS OF TITLE 24, CALIFORNIA CODE OF REGULATIONS AND THE PROJECT SPECIFICATIONS PREPARED BY ME, AND

2. COORDINATION WITH MY PLANS AND SPECIFICATIONS AND IS ACCEPTABLE FOR INCORPORATION INTO THE CONSTRUCTION OF THIS PROJECT.

THE STATEMENT OF GENERAL CONFORMANCE "SHALL NOT BE CONSTRUED AS RELIEVING ME OF MY RIGHTS, DUTIES, AND RESPONSIBILITIES UNDER SECTIONS 17302 AND 81138 OF THE EDUCATION CODE AND SECTIONS 4-336, 4-341 AND 4-344" OF TITLE 24, PART 1. (TITLE 24, PART 1, SECTION 4-317 (B))

I FIND THAT: ☒ ALL DRAWINGS OR SHEETS LISTED ON THE COVER OR INDEX SHEET
☐ THIS DRAWING OR PAGE

☒ IS / ARE IN GENERAL CONFORMANCE WITH THE PROJECT DESIGN,
AND
☒ HAS / HAVE BEEN COORDINATED WITH THE PROJECT PLANS AND SPECIFICATIONS.

SIGNATURE OF THE ARCHITECT — MARCH 21, 2025 DATE
WILLIAM J AMADOR, ARCHITECT
AMADOR WHITTLE ARCHITECTS, INC.

C-20348 — JANUARY 31, 2027
LICENSE NUMBER — EXPIRATION DATE

IDENTIFICATION STAMP
DIV. OF THE STATE ARCHITECT
APP: 03-124589 INC:
REVIEWED FOR
SS ☑ FLS ☑ ACS ☑
DATE: 04/15/2025

VENTURA COUNTY COMMUNITY COLLEGE DISTRICT
MOORPARK OXNARD VENTURA

VENTURA COUNTY COMMUNITY COLLEGE DISTRICT

761 EAST DAILY DRIVE
CAMARILLO, CALIFORNIA 93010
TEL: (805) 652-5500

PROJECT TITLE AND SCHOOL LOCATION

VENTURA COMMUNITY COLLEGE STEM MODULAR BUILDING
VENTURA COMMUNITY COLLEGE
4667 TELEGRAPH RD.
VENTURA, CA 93003

COMMISSIONED ARCHITECT

AMADOR

amador whittle architects, inc.
28328 AGOURA RD, 203 | AGOURA HILLS CA, 91301 | 805-558-4334

CONSULTANT

STAMPS/SEALS

LICENSED ARCHITECT
WILLIAM JORGE AMADOR
C-20348
JANUARY 31, 2027
RENEWAL DATE
STATE OF CALIFORNIA

DSA V3 SUBMITTAL 03/21/2025

SHEET TITLE:

GENERAL NOTES & ABBREVIATIONS

PROJECT NO: 22-VCCCD-08	PROJECT ARCH: Designer
DRAWN: Author	CHECKED: Checker

SHEET NUMBER:

G002

DATE: 9/3/24 — SHEET: ___ OF ___

DSA 810

FIRE & LIFE SAFETY SITE CONDITIONS SUBMITTAL

Division of the State Architect (DSA) documents referenced within this publication are available on the DSA Forms or DSA Publications webpages.

To facilitate the Division of the State Architect's (DSA) fire and life safety plan review of project site conditions, DSA requires the design professional to provide the following information at time of project submittal for projects consisting of construction of a new campus, construction of new building(s), additions to existing buildings, and for site alternate design means for fire department emergency vehicle access, and fire suppression water supply.

Information associated with compliance items 1 through 3 below is to be provided for all project types indicated above. Information associated with items 4 through 7 is to be completed when an alternate means is utilized. Acknowledgement by the school district and signature from the Local Fire Authority (LFA) is only required when an alternate design means is being requested.

The Project Information and Fire & Life Safety Information sections are to be completed for all projects and imaged onto the fire access site plan. When an alternate design/means is proposed, all sections on pages 1 and 2 are to be completed and imaged on the fire access site plan.

For additional information refer to the instructions at the end of this form and DSA Policy *PL 09-01: Fire Flow for Buildings*.

PROJECT INFORMATION
School District/Owner: VENTURA COUNTY COMMUNITY COLLEGE DISTRICT
Project Name/School: VENTURA COLLEGE CAMPUS STEM MODULAR CLASSROOM BUILDING
Project Address: 4667 TELEGRAPH ROAD VENTURA, CA 93003

FIRE & LIFE SAFETY INFORMATION				
1.	Has a fire hydrant flow test been performed within the past 12 months? *(If yes, provide a copy of the test data.)*	Yes ☑		No ☐
2.	Was the fire hydrant water flow test performed as part of this LFA review?	Yes ☑		No ☐
3.	Is the project located within a designated fire hazard severity zone (FHSZ) as established by Cal-Fire? *(If yes, indicate FHSZ classification below.)*	Yes ☐		No ☑
	Refer to the following website for FHSZ locations: http://egis.fire.ca.gov/FHSZ/	Moderate ☐	High ☐	Very High ☐
	Wildland Interface Area (WIFA) *(If any designations are checked, project design must meet the requirements of CBC Chapter 7A.)*			WIFA ☐

DGS DSA 810 (revised 12/29/20) DIVISION OF THE STATE ARCHITECT — DEPARTMENT OF GENERAL SERVICES — Page 1 of 4 STATE OF CALIFORNIA

DSA 810

FIRE & LIFE SAFETY SITE CONDITIONS SUBMITTAL

	CONDITION MEANS AND METHODS RESOLUTION	ALTERNATE ACCEPTED Yes	No	N/A	N/R
4.	Emergency vehicle access roadways do not meet CFC requirements.			✓	
4a.	**Acceptable Alternate:** Emergency vehicle and personnel access as proposed by the project architect is acceptable for providing fire suppression and protection of life and property.				
5.	**Fire Hydrants:** Number and spacing does not meet CFC requirements.			✓	
5a.	**Acceptable Alternate:** Number of fire hydrants and spacing as proposed by the project architect is acceptable for fire suppression and protection of life and property.				
6.	**Fire Hydrants:** Water flow and pressure are less than CFC minimum.			✓	
6a.	**Acceptable Alternate:** The available flow and pressure is acceptable for providing fire suppression and protection of life and property.				
7.	Location of fire department connection(s) serving fire sprinkler systems or standpipe systems does not meet CFC requirements.			✓	
7a.	**Acceptable Alternate:** The location of fire department connection serving the fire sprinkler system and/or standpipe system is acceptable for providing fire suppression and protection of life and property.				

School District Acceptance of Acceptable Design Alternates

By signing this form, the school district acknowledges and accepts the proposed design as an alternative to California Building Code (CBC) and California Fire Code (CFC) minimum requirements, as indicated by one or more of the conditions indicated at items 4a, 5a, 6a or 7a, for providing fire and life safety protection of life and property.

Accepted by: ______________________ Title: ______________________

Signature: ______________________ Date: ______________________

LOCAL FIRE AUTHORITY (LFA) INFORMATION	
LFA Agency Name:	
LFA Review Official:	
Title:	Work Phone:
Work Email:	

LFA Reviewer's Signature: ______________________ Date: ______________________

DGS DSA 810 (revised 12/29/20) DIVISION OF THE STATE ARCHITECT — DEPARTMENT OF GENERAL SERVICES — Page 2 of 4 STATE OF CALIFORNIA

County Fire Protection — 1884 Eastman Ave., #104 Ventura, Ca 93003

INSPECTION DATE 08/16/24

FIRE PROTECTION EQUIPMENT

FIRE HYDRANT REPORTS

INSPECTION, TEST & MAINTENANCE

CUSTOMER	X ANNUAL	FIVE YEAR
Ventura College, 4667 Telegraph Rd., Ventura, CA; CONTACT: Bishoy Elmagarisy; PHONE: 805.289.6253	TYPE OF SYSTEM: X WET BARREL	X PASS; FAIL; See Continuation Page

I Inspect; T Test; M Maintenance

TECHNICIAN: *Josue Morales (EE#22043)*

In accordance with NFPA CS Title 19 - Fire Protection Systems

ITEM		DESCRIPTION	PASS	FAIL	NA
1.1	M	All hydrant stems threads and caps were inspected for damage and lubrication.	M		
1.2	M	All hydrant outlets were fully opened and closed to insure smooth operation.	M		
1.3	M	All hydrant shut-off valves were closed and fully opened to insure adequate water flow.	M		
1.4	I	All hydrants are accessible with outlets 14" to 24" above grade.	I		
1.5	I	All crash posts are in place to prevent vehicular damage.	I		
1.6	I	All hydrants have 36 inches of unobstructed access.	I		
1.7	I	Each hydrant is clearly identified or marked.	I		
1.8	I	All hydrants mark with Blue reflectors	I		

DESCRIPTION/FIVE YEAR TESTING

DATE	HYDRANT # /LOCATION	BARREL SIZE		FLOW (GPM)	PRESSURE (PSI)
08/16/24	By Parking lot	4"	2.5"	920	55
08/16/24	By FCT Building	4"	2.5"	840	53

DATE	HYDRANT # /LOCATION	Static	Risd	Pitot	Diameter	Projected GPM Flow @20 PSI
08/16/24	By Parking Lot	55	53	30	2.5"	4311
08/16/24	By FCT Building	53	50	25	2.5"	3063

Item	Deficiencies and Comments Deficiencies and Comments Items number must correspond to the Item number of activity listed above

County Fire Protection — WWW.CoFirePro.com — license #C16-864414

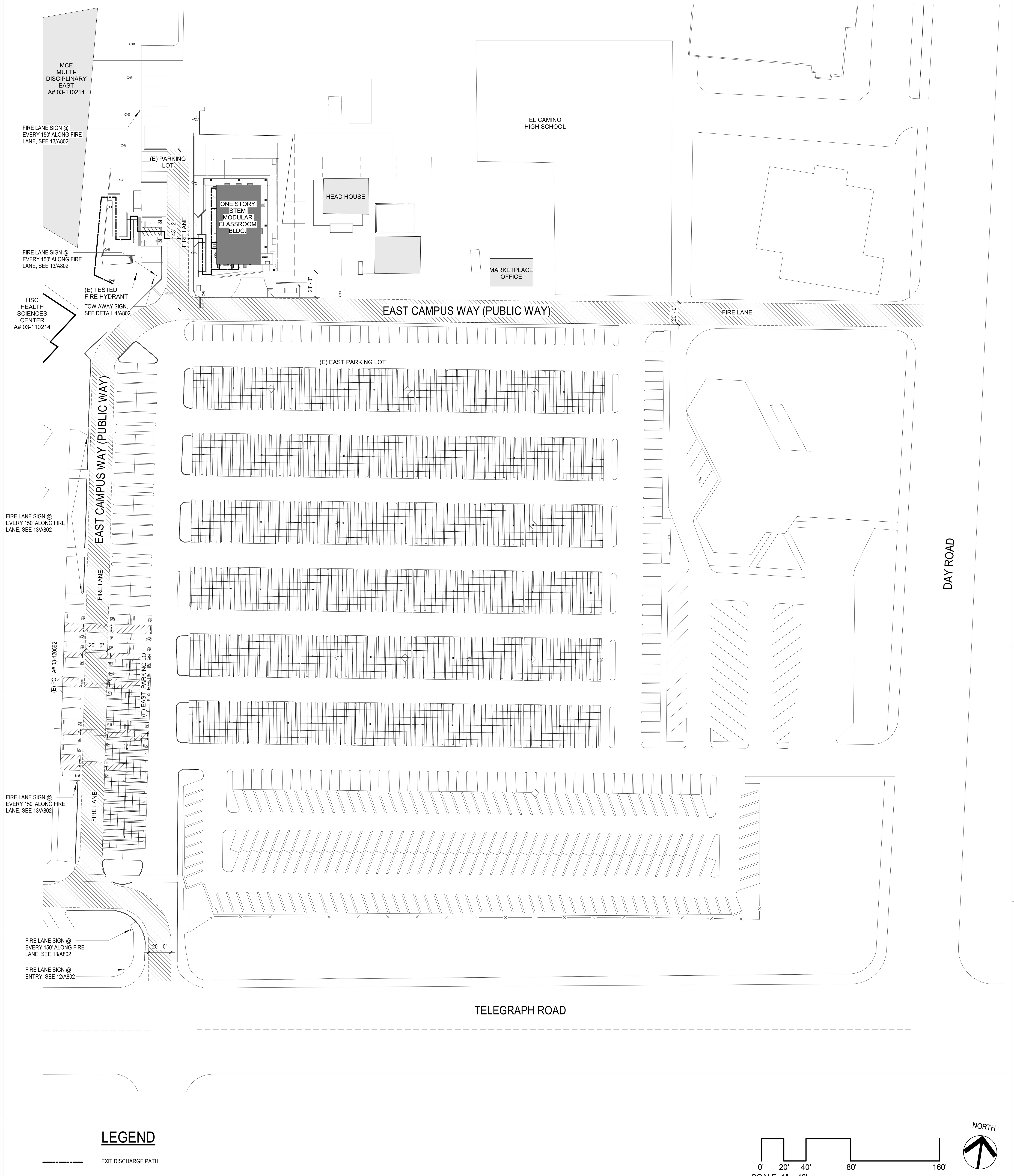

LEGEND

EXIT DISCHARGE PATH

SITE PLAN - FIRE AUTHORITY REVIEW — 1" = 40'-0" — 1

FIRE DEPARTMENT NOTES

1. PORTABLE FIRE EXTINGUISHER(S) SHALL BE PROVIDED.
2. MINIMUM 2A 10B:C FIRE EXTINGUISHERS SHALL BE PROVIDED. TRAVEL DISTANCE TO ANY EXTINGUISHER SHALL NOT EXCEED 75 FEET FROM ANY PORTION OF THE BUILDING. EXTINGUISHER(S) SHALL BE HUNG NO HIGHER THAN 44 INCHES MEASURED FROM THE FLOOR TO THE TOP OF THE EXTINGUISHER. SHALL NOT CONTAIN CFCS OR HALON
3. CFC 503.1; TITLE 19 DIVISION 1 § 3.05 - MAINTAIN FIRE ACCESS ROUTE(S). PUBLIC STREET ACCESS - PROVIDE SIGN(S) 'NO PARKING FIRE LANE WITH CALIFORNIA VEHICLE CODE 22500.1' AND DETAIL.
4. CFC 506.1 MAINTAIN / PROVIDE KEY BOXES FOR FIRE DEPARTMENT ACCESS, AS APPROPRIATE.
5. CFC 901.4; 907.8.5 INSTALLATION FIRE PROTECTION SYSTEM SHALL BE MAINTAINED IN ACCORDANCE WITH ORIGINAL INSTALLATION STANDARDS FOR THAT SYSTEM. REQUIRED SYSTEM SHALL BE EXTENDED, ALTERED OR AUGMENTED AS NECESSARY TO MAINTAIN AND CONTINUE PROTECTION WHENEVER THE BUILDING IS ALTERED, REMODELED OR ADDED TO.
6. TITLE 19 DIVISION 1 § 1.14 - EVERY FIRE ALARM SYSTEM OR DEVICE, SPRINKLER SYSTEM, FIRE EXTINGUISHER, FIRE HOSE, FIRE-RESISTIVE ASSEMBLY OR ANY OTHER FIRE SAFETY ASSEMBLY, DEVICE MATERIAL OR EQUIPMENT INSTALLED AND RETAINED IN SERVICE IN ANY BUILDING OR STRUCTURE SUBJECT TO CALIFORNIA CODE OF REGULATIONS, TITLE 19 DIVISION 1 REGULATIONS SHALL BE MAINTAINED IN AN OPERABLE CONDITION AT ALL TIMES IN ACCORDANCE WITH CALIFORNIA CODE OF REGULATIONS TITLE 19 DIVISION 1 REGULATIONS AND WITH THEIR INTENDED USE.
7. TITLE 19 DIVISION 1 § 3.24 UPON DISRUPTION OR DIMINISHMENT OF THE FIRE PROTECTIVE QUALITIES OF SUCH EQUIPMENT, MATERIAL OR SYSTEMS IMMEDIATE ACTION SHALL BE INSTITUTED TO EFFECT A REESTABLISHMENT OF SUCH EQUIPMENT MATERIAL OR SYSTEMS TO THEIR ORIGINAL NORMAL OPERATIONAL CONDITION.
8. CFC 901.5.1 IT SHALL BE UNLAWFUL TO OCCUPY ANY PORTION OF A BUILDING OR STRUCTURE UNTIL THE REQUIRED FIRE DETECTION, ALARM AND SUPPRESSION SYSTEMS HAS BEEN TESTED AND APPROVED.
9. FIRE ALARM SCOPE REQUIRES DSA APPROVED DRAWINGS FOR REFERENCE OF AREAS IN SCOPE TO INCLUDE COMPLIANT FIRE ALARM COMPONENTS (SMOKE-HEAT-AUDIBLE-VISUAL-MANUAL) . (STATEMENT OF COMPLIANCE PER CFC 901.2.1; 901.6.2.1 & INCORPORATE APPLICABLE SECTIONS PER: 2016 CALIFORNIA REGULATIONS
10. CBC 3301.1 - THE PROVISIONS OF THIS CHAPTER SHALL GOVERN SAFETY DURING CONSTRUCTION AND THE PROTECTION OF ADJACENT PUBLIC PROPERTIES.
11. CBC 3302.3 - FIRE SAFETY DURING CONSTRUCTION SHALL COMPLY WITH THE APPLICABLE REQUIREMENTS OF THIS CODE AND THE APPLICABLE PROVISIONS OF CHAPTER 33 OF CALIFORNIA FIRE CODE.
12. CBC 3309.1 - STRUCTURES UNDER CONSTRUCTION, ALTERATION OR DEMOLITION SHALL BE PROVIDED WITH NO FEWER THAN ONE APPROVED PORTABLE FIRE EXTINGUISHER IN ACCORDANCE WITH SECTION 906 AND SIZED FOR NOT LESS THAN ORDINARY HAZARD AS FOLLOWS: 1. ONE AT EVERY STORAGE AND CONSTRUCTION SHED. 2. ADDITIONAL PORTABLE FIRE EXTINGUISHERS SHALL BE PROVIDED WHERE SPECIAL HAZARDS EXIST, SUCH AS THE STORAGE AND USE FLAMMABLE AND COMBUSTIBLE LIQUIDS.
13. INCORPORATE TESTING NOTE: 'COMPLETION OF CONSTRUCTION SHALL INCLUDE RE-ACCEPTANCE TESTING PROVISION FROM NFPA 72 CHAPTER 14 IN ACCORDANCE WITH CFC 907.7; SMOKE DETECTORS SENSITIVITY AS REQUIRED BY CFC 907.8.3; 907.8.4 & SECTION 14.4.4.3'
14. CFC 1031.1 - THE MEANS OF EGRESS FOR BUILDING OR PORTIONS THEREOF SHALL BE MAINTAINED IN ACCORDANCE WITH THIS SECTION.
15. CFC 1031.2 - REQUIRED EXIT ACCESSES, EXITS AND EXIT DISCHARGES SHALL BE CONTINUOUSLY MAINTAIN FREE FROM OBSTRUCTION OR IMPEDIMENTS TO FULL INSTANT USE IN THE CASE OF FIRE OR OTHER EMERGENCY WHERE THE BUILDING AREA SERVED BY THE MEANS OF EGRESS IS OCCUPIED. AN EXIT OR EXIT PASSAGEWAY SHALL NOT BE USED FOR ANY PURPOSE THAT INTERFERES WITH MEANS OF EGRESS.
16. CFC 1031.2.1 - SECURITY DEVICES AFFECTING MEANS OF EGRESS SHALL BE SUBJECT TO APPROVAL OF THE FIRE CODE OFFICIAL.
17. CFC 1031.3 - A MEANS OF EGRESS SHALL BE FREE FROM OBSTRUCTIONS THAT WOULD PREVENT ITS USE, INCLUDING THE ACCUMULATION OF SNOW AND ICE.
18. CFC 1031.4 - EXIT SIGNS SHALL BE INSTALLED AND MAINTAINED IN ACCORDANCE WITH SECTION 1013. DECORATIONS, FURNISHING, EQUIPMENT OR ADJACENT SIGNAGE THAT IMPAIRS THE VISIBILITY OF EXISTING SIGNS, CREATES CONFUSION OR PREVENTS IDENTIFICATION OF THE EXIT SHALL NOT BE ALLOWED.
19. EMERGENCY VEHICLE ACCESS ROADWAY SHALL BE IDENTIFIED BY RED CURB MARKING AND ROADWAY SURFACE MARKING. RED CURB MARKING: CURB TOP AND SIDE SHALL BE PAINTED RED, AND THE WORDS, "FIRE LANE" IN WHITE, SHALL BE STENCILED ON THE TOP AND SIDE OF ALL RED CURBS AT A MAXIMUM INTERVAL OF 50 FEET. SUCH MARKINGS SHALL BE IN ACCORDANCE WITH LOCAL FIRE DEPARTMENT.
20. PROVIDE KNOX PADLOCK AT EXISTING MANUALLY ROLLING GATE PER VENTURA COUNTY FIRE PROTECTION DISTRICT STD. 501.

CBC SECTION 507 FIRE PROTECTION WATER SUPPLIES:

507.1 REQUIRED WATER SUPPLY. AN APPROVED WATER SUPPLY CAPABLE OF SUPPLYING THE REQUIRED FIRE FLOW FOR FIRE PROTECTION SHALL BE PROVIDED TO PREMISES UPON WHICH FACILITIES, BUILDINGS OR PORTIONS OF BUILDINGS ARE HEREAFTER CONSTRUCTED OR MOVED INTO OR WITHIN THE JURISDICTION.
507.3 FIRE FLOW. FIRE FLOW REQUIREMENTS FOR BUILDINGS OR PORTIONS OF BUILDINGS AND FACILITIES SHALL BE DETERMINED BY AN APPROVED METHOD OR APPENDIX BB.
507.4 WATER SUPPLY TEST. THE FIRE CODE OFFICIAL SHALL BE NOTIFIED PRIOR TO THE WATER SUPPLY TEST. WATER SUPPLY TESTS SHALL BE WITNESSED BY THE FIRE CODE OFFICIAL OR APPROVED DOCUMENTATION OF THE TEST SHALL BE PROVIDED TO THE FIRE OFFICIAL PRIOR TO FINAL APPROVAL OF THE WATER SUPPLY SYSTEM.
507.5. FIRE HYDRANT SYSTEMS
507.5.1 WHERE REQUIRED. WHERE A PORTION OF THE FACILITY OR BUILDING HEREAFTER CONSTRUCTED OR MOVED INTO OR WITHIN THE JURISDICTION IS MORE THAN 400 FEET FROM A HYDRANT ON A FIRE APPARATUS ACCESS ROAD, AS MEASURED BY AN APPROVED ROUTE AROUND THE EXTERIOR OF THE FACILITY OR BUILDING, ON-SITE FIRE HYDRANTS AND MAINS SHALL BE PROVIDED WHERE REQUIRED BY THE FIRE CODE OFFICIAL.
507.5.2 INSPECTION, TESTING AND MAINTENANCE. FIRE HYDRANT SYSTEMS SHALL BE SUBJECT TO PERIODIC TESTS AS REQUIRED BY THE FIRE CODE OFFICIAL. FIRE HYDRANT SYSTEMS SHALL BE MAINTAINED IN AN OPERATIVE CONDITION AT ALL TIMES AND SHALL E REPAIRED WHERE DEFECTIVE. ADDITIONS, REPAIRS, ALTERATIONS AND SERVICING SHALL COMPLY WITH APPROVED STANDARDS. RECORDS OF TESTS AND REQUIRED MAINTENANCE SHALL BE MAINTAINED.
507.5.4 OBSTRUCTION. UNOBSTRUCTED ACCESS TO FIRE HYDRANTS SHALL BE MAINTAINED AT ALL TIMES. THE FIRE DEPARTMENT SHALL NOT BE DETERRED OR HINDERED FROM GAINING IMMEDIATE ACCESS TO FIRE PROTECTION EQUIPMENT OR FIRE HYDRANTS.
507.5.5 CLEAR SPACE AROUND HYDRANTS. A 3-FOOT CLEAR SPACE SHALL BE MAINTAINED AROUND THE CIRCUMFERENCE O FIRE HYDRANTS, EXCEPT AS OTHERWISE REQUIRED OR APPROVED.
507.5.6 PHYSICAL PROTECTION. WHERE FIRE HYDRANTS ARE SUBJECT TO IMPACT BY A MOTOR VEHICLE, GUARD POSTS OR OTHER APPROVED MEANS SHALL COMPLY WITH SECTION 312.

FIRE LINE - RED CURB — 1 1/2" = 1'-0" — 2

FIRE LANE - RED CURB — NTS — 3

IDENTIFICATION STAMP DIV. OF THE STATE ARCHITECT
APP: 03-124589 INC:
REVIEWED FOR SS ☑ FLS ☑ ACS ☑
DATE: 04/15/2025

VENTURA COUNTY COMMUNITY COLLEGE DISTRICT
761 EAST DAILY DRIVE
CAMARILLO, CALIFORNIA 93010
TEL: (805) 652-5500

PROJECT TITLE AND SCHOOL LOCATION

VENTURA COMMUNITY COLLEGE STEM MODULAR BUILDING
VENTURA COMMUNITY COLLEGE
4667 TELEGRAPH RD.
VENTURA, CA 93003

COMMISSIONED ARCHITECT

AMADOR
amador whittle architects, inc.
28328 AGOURA RD, 203 | AGOURA HILLS CA, 91301 | 805-558-4334

CONSULTANT

STAMPS/SEALS

LICENSED ARCHITECT WILLIAM JORGE AMADOR C-20348 JANUARY 31, 2027 RENEWAL DATE STATE OF CALIFORNIA

DSA V3 SUBMITTAL 03/21/2025

SHEET TITLE:

SITE PLAN - FIRE AUTHORITY

PROJECT NO.	22-VCCCD-08	PROJECT ARCH:	Designer
DRAWN:	Author	CHECKED:	Checker
SHEET NUMBER:	**G003**		
DATE:	9/3/24	SHEET:	___ OF ___

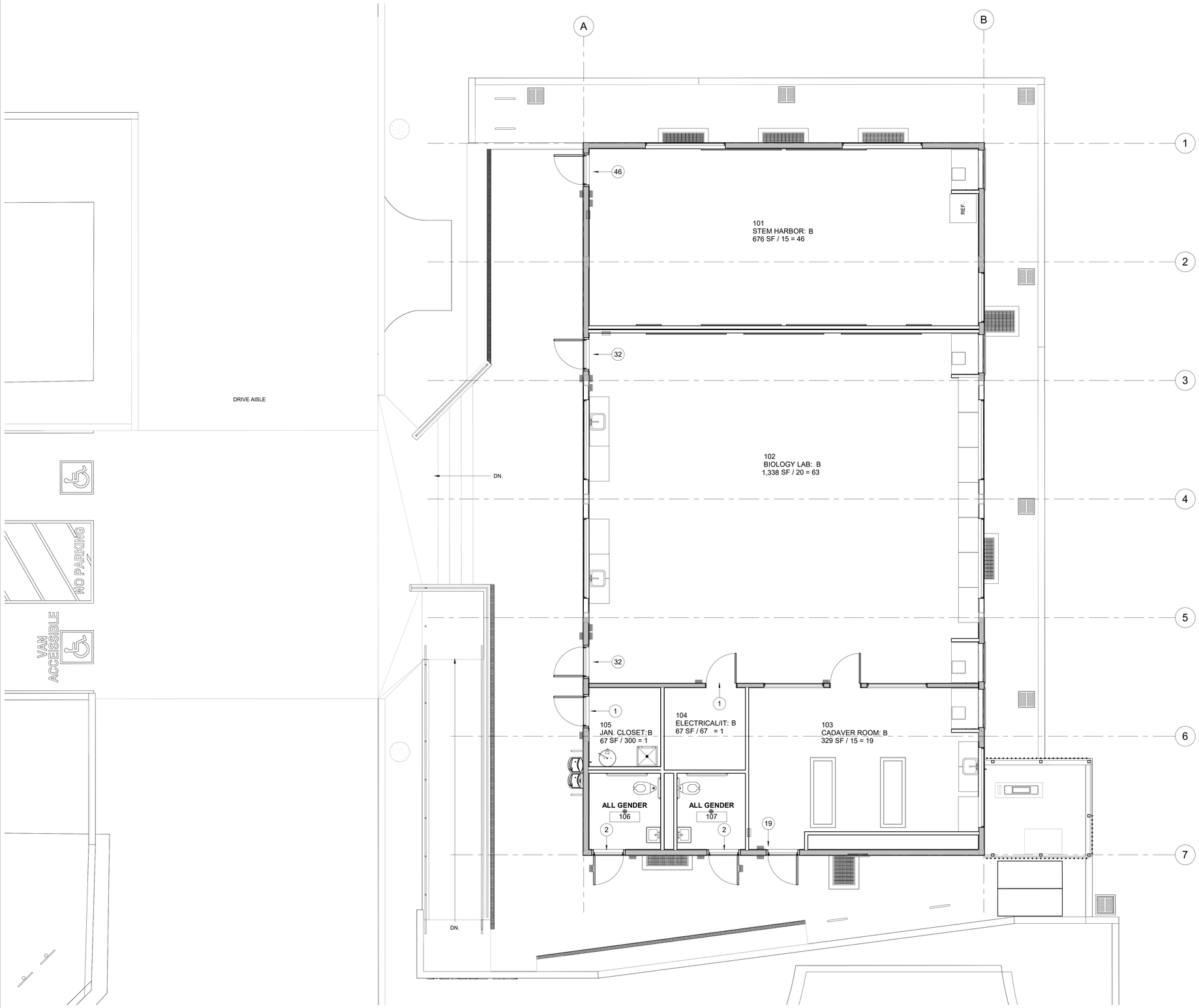

EGRESS PLAN | 1/4" = 1'-0" | 1

CODE ANALYSIS

OCCUPANCY CLASSIFICATION:	B
CONSTRUCTION TYPE:	V-B NS
ALLOWABLE BUILDING HEIGHT ABOVE GRADE (TABLE 504.3):	40'-0"
ACTUAL BUILDING HEIGHT ABOVE GRADE:	16'-0"
ALLOWABLE NUMBER OF STORIES ABOVE GRADE (TABLE 504.4):	2 STORIES
ACTUAL NUMBER OF STORIES:	1 STORY
ALLOWABLE FLOOR AREA (TABLE 506.2)	9,000 SF
ACTUAL FLOOR AREA:	2,880 SF
FULLY SPRINKLERED:	NO

CBC SECTION 1010.1.10 PANIC AND FIRE EXIT HARDWARE:

SWINGING DOORS SERVING ROOMS OR SPACES WITH AN OCCUPANT LOAD OF 50 OR MORE IN A GROUP "A" OR "E" OCCUPANCY ASSEMBLY AREA NOT CLASSIFIED AS AN ASSEMBLY OCCUPANCY E, I-2, OR I-2.1 OCCUPANCIES SHALL NOT BE PROVIDED WITH A LATCH OR LOCK OTHER THAN PANIC HARDWARE OR FIRE EXIT HARDWARE.

LEGEND

ROOM TAG

ROOM NO.
ROOM NAME
222
OFFICE: B
100 SF/100 = 1
S.F. OF ROOM
OCCUPANT FACTOR
OCCUPANCY TYPE
OCCUPANTS

PV SYSTEM CALC-CLIMATE ZONE 6

CONDITIONED SPACE (SF)
676 + 1,338 + 67 + 329 = 2,410

kW = (2,410 x 1.63) / 1000 = 3.9283

NO PV SYSTEM REQUIRED PER EXCEPTION 2

EQUATION 140.10-A
PHOTOVOLTAIC DIRECT CURRENT SIZE
kW_{PVdc} = (CFA x A) / 1000
WHERE:
kW_{PVdc} = SIZE OF THE PV SYSTEM IN kW.
CFA = CONDITIONED FLOOR AREA IN SQUARE FEET.
A = PV CAPACITY FACTOR SPECIFIED IN TABLE 140.10-A FOR THE BUILDING TYPE.

EXCEPTION 2 TO SECTION 140.10(A): NO PV SYSTEM IS REQUIRED
PV SYSTEM SIZE IS LESS THAN 4 kW_{dc}.

TABLE 140.10-A
PV CAPACITY FACTORS

	FACTOR A - MINIMUM PV CAPACITY (W/ft² OF CONDITIONED FLOOR AREA)		
CLIMATE ZONE	**1, 3, 5, 16**	**2, 4, 6-14**	**15**
GROCERY	2.62	2.91	3.53
HIGH-RISE MULTIFAMILY	1.82	2.21	2.77
OFFICE, FINANCIAL INSTITUTIONS, UNLEASED TENANT SPACE	2.59	3.13	3.80
RETAIL	2.62	2.91	3.53
SCHOOL	1.27	1.63	2.46
WAREHOUSE	0.39	0.44	0.58
AUDITORIUM, CONVENTION CENTER, HOTEL/MOTEL, LIBRARY, MEDICAL OFFICE BUILDING/CLINIC, RESTAURANT, THEATER	0.39	0.44	0.58

0" 2" 4" 8" 16"

IDENTIFICATION STAMP
DIV. OF THE STATE ARCHITECT
APP: 03-124589 INC:
REVIEWED FOR
SS ☑ FLS ☑ ACS ☑
DATE: 04/15/2025

VENTURA COUNTY COMMUNITY COLLEGE DISTRICT
761 EAST DAILY DRIVE
CAMARILLO, CALIFORNIA 93010
TEL: (805) 652-5500

PROJECT TITLE AND SCHOOL LOCATION

VENTURA COMMUNITY COLLEGE STEM MODULAR BUILDING
VENTURA COMMUNITY COLLEGE
4667 TELEGRAPH RD.
VENTURA, CA 93003

COMMISSIONED ARCHITECT

AMADOR

amador whittle architects, inc.
28328 AGOURA RD, 203 | AGOURA HILLS CA. 91301 | 805-558-4334

CONSULTANT

STAMPS/SEALS

LICENSED ARCHITECT
WILLIAM JORGE AMADOR
C-20348
JANUARY 31, 2027
RENEWAL DATE
STATE OF CALIFORNIA

DSA V3 SUBMITTAL 03/21/2025

SHEET TITLE:

CODE & EGRESS ANALYSIS PV SYSTEM CALC-CLIMATE ZONE 6

PROJECT NO: 22-VCCCD-08	PROJECT ARCH: Designer
DRAWN: Author	CHECKED: Checker
SHEET NUMBER: G004	
DATE: 9/3/24	SHEET: ___ OF ___

SURVEY NOTES:

1. TOPOGRAPHIC AND UTILITY INFORMATION WAS OBTAINED FROM A FIELD SURVEY PREPARED BY MOLLENHAUER GROUP SURVEY, DATED AUGUST 25, 2022. EXISTING CONTOURS, SPOT ELEVATIONS AND OTHER EXISTING TOPOGRAPHIC FEATURES SHOWN HEREON ARE A TRUE REPRESENTATION OF SITE CONDITIONS ON THE DATE THE SURVEY WAS PREPARED.
2. THE DRAWINGS FOR THIS PROJECT ARE DIVIDED INTO SEPARATE SHEETS FOR GENERAL CONVENIENCE ONLY. THE SHEET DESIGNATIONS OR NUMBERS SHALL NOT BE CONSIDERED TO LIMIT AREAS OF WORK RESPONSIBILITY, OR TRADES. THE CONTRACTOR SHALL COORDINATE THE DRAWINGS, SPECIFICATIONS, AND PROJECT MANUAL AS REQUIRED TO COMPLETE THE PROJECT AS DESIGNED.

LEGEND:

PROPERTY LINE	
CENTER LINE	
CHAIN LINK FENCE	C.L.F OR — x — x — x —
FINISH (DESIGN) GRADE CONTOUR	70.50
FLOW LINE	F.L. OR ——> ——> ——
GRADE CHANGE	G.C. OR
STEEL HANDRAIL	S.H.R.
RIDGE LINE	R
SAFETY & TECHNOLOGY	S&T
NEW ELECTRICAL CONDUIT	E
NEW GAS LINE	G
NEW SEWER LINE	S
NEW WATER LINE	W
REMOVE EXISTING UTILITY LINE	(SD)
BANG BOARD	
LIMIT OF WORK	
ASPHALTIC CONCRETE	AC
AIR VENT	AV
ACID WASTE	AW
BACK OF WALK	BW
BASEBALL BACK STOP	BBBS
BOTTOM OF EXCAVATED PLANE	BEP
CAST IRON PIPE	CIP
CATCH BASIN	CB
CEMENT CONCRETE	CC
CLEANOUT	CO
CONCRETE SUB-SLAB	CSS
CURB FACE	CF
DISINTEGRATED GRANITE	DG
DETECTOR CHECK	DC
DOWNSPOUT	DS
DRINKING FOUNTAIN	DF
DRIVEWAY	DWY
EDGE OF GUTTER	EG
EXISTING ELECTRICAL CONDUIT	(E)
EXISTING GAS LINE	(G)
EXISTING SEWER LINE	(SS)
EXISTING STORM DRAIN LINE	(SD)
EXISTING WATER LINE	(W)
FINISHED FLOOR	FF
FIRE HYDRANT	FH
FLOW LINE	FL
FINISH SURFACE	FS
FOOTING	FTG
GAS METER	GM
GROUND	GND
GUY WIRE	GW
HOSE BIBB	HB
INVERT ELEVATION	IE
LIGHT STANDARD	LS
MANHOLE	MH
METAL STORAGE CONTAINER	MSC
MOWING STRIP	MS
NO TREE	NT
PLANTING AREA	PA
POINT OF INTERSECTION	PI
POWER POLE	PP
STREET SIGN	SS
TOP OF BOTTOM STEP	TBS
TOP OF CURB	TC
TOP OF GRATE	TG
TOP OF HEADER	TH
TOP OF TOP STEP	TTS
TOP OF WALL	TW
TREE, EXISTING (SIZE NOTED)	X"
VERIFY IN FIELD	V.I.F.
WATER METER	WM
WATER VAULT	W VLT
FIRE ALARM VAULT	FA VLT
DATA VAULT	D VLT
POWER VAULT	P VLT
SIGNAL VAULT	S VLT
WOOD STORAGE CONTAINER	WSC
YARD BOX GROUND ROD	YB GRD R
YARD BOX (SEWER,WATER,GAS,ELECTRICAL)	YB(S,W,G,E)

DIGALERT® 811

G:\Projects\Civil\LA30354_Ventura College Civil Improvements_AWA\Design\Grading\Area 1\2024-11-22\AREA1_C-1.00_NOTES AND LEGEND.dwg Date:12/18/24 05:33p tritiou

GENERAL NOTES:

1. CONSTRUCT STRAIGHT GRADES BETWEEN ELEVATIONS SHOWN ON PLAN UNLESS INTERRUPTED BY A GRADE CHANGE LINE. ANY DEVIATION FROM THE GRADING PLAN MUST HAVE PRIOR APPROVAL FROM THE ENGINEER.
2. ADJUST TO DESIGN GRADE TOP OF EXISTING VALVE BOXES WITHIN AREAS TO BE REGRADED AS SHOWN ON PLAN.
3. MAINTAIN A RECORD OF LOCATION OF UTILITY MARKERS ON THE AS-BUILT PLAN AND REINSTALL THEM AFTER PAVING. REPLACE BENT OR UNUSABLE MARKERS. FOR ALL UTILITY LINES DISCOVERED WITHIN THE WORK AREA, INSTALL BRASS UTILITY MARKERS INDICATING DIRECTIONS OF LINES AT ALL CHANGES IN DIRECTIONS AFTER PAVING. INFORM THE SURVEYOR TO LOCATE AND RECORD ACTUAL LOCATIONS.
4. UNCLOG, CLEAN AND FLUSH THE WORK AREA DRAINAGE SYSTEM AFTER PAVING AND IMMEDIATELY BEFORE A RAIN FORECAST.
5. ALL WORK SHALL CONFORM TO THE REQUIREMENTS OF THE 2022 CALIFORNIA BUILDING CODE, CAL-OSHA, CITY, COUNTY AND STATE REQUIREMENTS, THE GOVERNING BUILDING AUTHORITY, ANY SPECIAL REQUIREMENTS OF THE BUILDING PERMIT, AND ANY OTHER REGULATING AGENCIES WHICH HAVE AUTHORITY OF ANY PORTION OF THE WORK, INCLUDING THE STATE OF CALIFORNIA DIVISION OF INDUSTRIAL SAFETY AND THOSE CODES LISTED IN THESE NOTES AND SPECIFICATIONS. ALL CODES, AND SPECIFICATIONS SHALL BE AS AMENDED TO DATE. IN THE EVENT OF A CONFLICT BETWEEN ANY OF THE GOVERNING CODES THE MORE STRICT INTERPRETATION SHALL GOVERN. ANY VIOLATION OF THESE CODES ON THE PART OF THE CONTRACTOR WILL RESULT IN STOPPING OF ALL WORK UNTIL THE VIOLATION IS CORRECTED.
6. THE DRAWINGS AND SPECIFICATIONS DESCRIBE IN GENERAL THE QUALITY AND CHARACTER OF THE MATERIALS, SHAPE AND CONFIGURATION OF SITES, STRUCTURES AND METHOD OF INSTALLATION. MISCELLANEOUS ITEMS OF WORK, MATERIAL, EQUIPMENT, ETC., NECESSARY TO COMPLETE THE INSTALLATION SHALL BE PROVIDED BY THE CONTRACTOR WHETHER OR NOT MENTIONED IN THESE NOTES OR SHOWN ON THE DRAWINGS. SPECIFIC NOTES AND DETAILS SHALL TAKE PRECEDENCE OVER GENERAL NOTES AND TYPICAL DETAILS. TYPICAL DETAILS AND GENERAL NOTES ARE MINIMUM REQUIREMENTS TO BE USED WHEN CONDITIONS ARE NOT SHOWN OTHERWISE. WHERE NO DETAILS ARE SHOWN CONSTRUCTION SHALL CONFORM TO SIMILAR WORK ON PROJECT.
7. THE CONTRACTOR SHALL PROVIDE ALL LABOR, MATERIALS AND EQUIPMENT NECESSARY TO INSTALL AND ERECT THE CONSTRUCTION AS REQUIRED TO PROPERLY COMPLETE THE WORK. THE CONTRACTOR SHALL PROVIDE TEMPORARY ERECTION BRACING, SHORING, TEMPORARY SUPPORTS, ETC., FOR ALL MEMBERS AS REQUIRED FOR THE STABILITY OF THE SITE OR THE STRUCTURE(S) DURING ALL PHASES OF CONSTRUCTION ADEQUATELY DESIGNED FOR THE IMPOSITION OF ALL LOADS DURING CONSTRUCTION. THE DRAWINGS SHOW THE FORM OF THE COMPLETED CIVIL IMPROVEMENTS EXCLUSIVE OF ANY PROVISIONS FOR BRACING OR SHORING DURING CONSTRUCTION. THE CONTRACTOR SHALL IMMEDIATELY NOTIFY THE ENGINEER AND ARCHITECT OF ANY CONDITION WHICH MIGHT ENDANGER THE STABILITY OF THE SITE OR STRUCTURE(S) OR CAUSE DISTRESS OF THE EXISTING STRUCTURE(S). THE ENGINEER AND ARCHITECT ARE NOT RESPONSIBLE FOR INSPECTION OF THE ELEMENTS DESCRIBED ABOVE, NOR WILL THE ENGINEER AND ARCHITECT BE RESPONSIBLE FOR THE CONTRACTOR'S MEANS, METHODS, TECHNIQUES OR SEQUENCES.
8. ANY REVISIONS OR ADDITIONAL WORK REQUIRED AS A RESULT OF FIELD CONDITIONS OR THE LOCAL GOVERNING AUTHORITIES SHALL BE BROUGHT TO THE ATTENTION OF THE ENGINEER AND ARCHITECT BEFORE PROCEEDING REGARDLESS OF COST, TIME OR MATERIAL INCREASE. ANY ADDITIONAL WORK PERFORMED BY THE CONTRACTOR WITHOUT WRITTEN AUTHORIZATION SHALL BE THE FULL RESPONSIBILITY OF THE CONTRACTOR WHO SHALL BEAR ALL COSTS ATTRIBUTABLE THERETO.
9. FIELD INVESTIGATE, VERIFY AND BE RESPONSIBLE FOR ALL CONDITIONS, ELEVATIONS AND DIMENSIONS OF THE PROJECT, AS SHOWN ON OR REFERENCED ON THE DRAWINGS, AND NOTIFY THE ENGINEER AND ARCHITECT ABOUT ANY CONDITION REQUIRING MODIFICATION. THE GENERAL CONTRACTOR AND EACH SUB-CONTRACTOR SHALL VERIFY ALL DIMENSIONS AND SITE CONDITIONS BEFORE STARTING WORK, AND SHALL NOTIFY THE ARCHITECT AND ENGINEER OF ANY DISCREPANCIES. EXAMINE THE DRAWINGS AND SPECIFICATIONS AND CLEARLY UNDERSTAND THE EXISTING CONDITIONS UNDER WHICH THE WORK IS TO BE PERFORMED PRIOR TO START OF WORK. ENTERING INTO AN AGREEMENT WITH THE DISTRICT INDICATES THAT THE CONTRACTOR HAS FAMILIARIZED HIMSELF OR HERSELF WITH EXISTING CONDITIONS ON THE PLAN, AND REVIEWED THE REQUIREMENTS OF CONTRACT DOCUMENTS. THE CONTRACT DOCUMENTS ILLUSTRATE THE INTENT OF THE WORK TO BE PERFORMED.
10. ANY AND ALL REVISIONS TO THE CONSTRUCTION DOCUMENTS SHALL BE IN WRITTEN CHANGE ORDER FORM AND APPROVED AND AUTHORIZED BY THE ENGINEER, ARCHITECT AND DSA BEFORE BEGINNING WORK.
11. THE CONTRACTOR SHALL MAINTAIN A CURRENT AND COMPLETE SET OF CONSTRUCTION DOCUMENTS ON THE JOB SITE DURING ALL PHASES OF CONSTRUCTION FOR USE OF ALL TRADES, AND SHALL PROVIDE ALL SUBCONTRACTORS WITH CURRENT CONSTRUCTION DOCUMENTS. CONTRACTOR SHALL CONSTRUCT THE WORK USING ONLY THE "ISSUE FOR CONSTRUCTION" DRAWINGS. WORK NOT IN FULL CONFORMANCE WITH THE "ISSUE FOR CONSTRUCTION" DRAWINGS SHALL BE REMOVED AND REPLACED AT THE CONTRACTOR'S EXPENSE AND TO THE SATISFACTION OF THE ENGINEER AND ARCHITECT.
12. ALL WORK LISTED, SHOWN, OR IMPLIED ON ANY CONSTRUCTION DOCUMENTS SHALL BE SUPPLIED AND INSTALLED BY THE CONTRACTOR, EXCEPT WHERE NOTED OTHERWISE. THE CONTRACTOR SHALL CLOSELY COORDINATE THE WORK WITH THAT OF OTHER SUB-CONTRACTORS OR EQUIPMENT VENDORS TO ASSURE THAT ALL SCHEDULES ARE MET AND THAT ALL WORK IS DONE IN CONFORMANCE TO MANUFACTURERS' REQUIREMENTS.
13. THE DRAWINGS FOR THIS PROJECT ARE DIVIDED INTO SEPARATE SHEETS FOR GENERAL CONVENIENCE ONLY. THE SHEET DESIGNATIONS OR NUMBERS SHALL NOT BE CONSIDERED TO LIMIT AREAS OF WORK, RESPONSIBILITY, OR TRADES. THE CONTRACTOR SHALL COORDINATE THE DRAWINGS, SPECIFICATIONS, AND PROJECT MANUAL AS REQUIRED TO COMPLETE THE PROJECT AS DESIGNED.
14. MATERIALS ARE SPECIFIED BY THEIR BRAND NAMES TO ESTABLISH STANDARDS OF QUALITY AND PERFORMANCE. ANY REQUEST FOR SUBSTITUTIONS SHALL BE SUBMITTED TO THE ENGINEER AND ARCHITECT FOR REVIEW AND APPROVAL AT THE TIME OF BIDDING. SUBSTITUTE MATERIALS SHALL NOT BE PURCHASED OR INSTALLED WITHOUT THE WRITTEN APPROVAL OF THE ENGINEER AND ARCHITECT.
15. IF THE CONTRACTOR PERFORMS ANY WORK OR PERMITS SUB-CONTRACTORS OR SUPPLIERS TO PERFORM THEIR WORK, KNOWING IT TO BE CONTRARY TO APPLICABLE LAWS, ORDINANCES, RULES AND REGULATIONS WITHOUT PRIOR NOTICE TO THE ENGINEER, ARCHITECT AND/OR THE DISTRICT, THEY SHALL ASSUME FULL RESPONSIBILITY AND SHALL BEAR ALL COSTS ATTRIBUTABLE THERETO.
16. NOT USED.
17. THE CONTRACTOR SHALL NOTIFY THE ENGINEER AND ARCHITECT REGARDING THE AVAILABILITY OF SPECIFIED MATERIALS PRIOR TO CONSTRUCTION. SHOULD NO NOTIFICATION BE GIVEN, IT WILL BE ASSUMED THAT MATERIALS ARE AVAILABLE.
18. ALL NON-SPECIFIED MATERIALS SHALL BE THE BEST OF THEIR RESPECTIVE TYPES, AND ALL LABOR INSTALLATION SHALL BE PERFORMED IN THE BEST POSSIBLE MANNER BY SKILLED WORKMEN.
19. THE CONTRACTOR IS RESPONSIBLE FOR THE CORRECT LOCATIONS OF ALL WORK TO SUIT BUILDING CONDITIONS. FIELD RESOLVE (OR IF SPECIFIED THROUGH THE GENERATION OF SHOP DRAWINGS) ALL WORK BETWEEN TRADES IN EQUIPMENT LOCATION INCLUDING, BUT NOT LIMITED TO, PIPING; CONDUIT RUNS; FIXTURES; COMMUNICATIONS; ALARMS; STRUCTURAL AND ARCHITECTURAL FEATURES. PHYSICALLY ARRANGE ALL SYSTEMS TO FIT IN THE SPACES AVAILABLE AT THE ELEVATIONS REQUIRED WITH CONSIDERATION FOR PROPER CLEARANCES AND ACCESSIBILITY.
20. THE CONTRACTOR SHALL BE RESPONSIBLE FOR ALL WORK NECESSARY TO IMPLEMENT AN ARCHITECT/ENGINEER-APPROVED CONTRACTOR-SUGGESTED OPTION, AND THE CONTRACTOR SHALL COORDINATE ALL DETAILS.
21. APPROVAL BY THE INSPECTOR OF RECORD (IOR) DOES NOT MEAN APPROVAL OR ALLOWABLE FAILURE TO COMPLY WITH THE PLANS AND SPECIFICATIONS. ANY DESIGN WHICH FAILS TO BE CLEAR OR IS AMBIGUOUS MUST BE REFERRED TO THE ARCHITECT OF RECORD (AOR) FOR INTERPRETATION OR CLARIFICATION.
22. THE CONTRACTOR SHALL TAKE ALL MEASUREMENTS AT THE BUILDING AND SHALL VERIFY ALL DIMENSIONS AND CONDITIONS BEFORE PROCEEDING WITH ANY WORK. SHOULD ANY VARIATION BE FOUND, THE MATTER SHALL BE REFEREED TO ARCHITECT FOR JUDGEMENT. THE CONTRACTOR WILL BE HELD RESPONSIBLE FOR THE PROPER FITTING OF THE WORK IN PLACE.
23. IF, IN THE OPINION OF THE CONTRACTOR, ANY WORK IS SHOWN ON THE DRAWINGS OR DETAILS IN A MANNER AS WILL MAKE IT IMPOSSIBLE TO PRODUCE A FIRST QUALITY PIECE OF WORK, OR SHOULD DISCREPANCIES APPEAR BETWEEN THE DRAWINGS AND/OR DETAILS, THE CONTRACTOR SHALL REFER THE CONDITION TO THE ENGINEER AND ARCHITECT FOR INTERPRETATION AND DIRECTION BEFORE PROCEEDING WITH THE WORK. IF THE CONTRACTOR FAILS TO CONSULT THE ENGINEER AND ARCHITECT, NO EXCUSE WILL THEREAFTER BE ENTERTAINED FOR FAILURE TO CARRY OUT THE WORK IN A SATISFACTORY MANNER, AS DIRECTED.
24. THE CONTRACTOR SHALL KEEP AT THE SITE OF THE WORK ONE COPY OF PLANS AND SPECIFICATIONS SIGNED AND APPROVED BY THE DIVISION OF STATE ARCHITECT AND SHALL AT ALL TIMES GIVE THE ENGINEER, ARCHITECT AND OTHERS APPROPRIATE PARTIES ACCESS THERETO. IN THE CASE OF ANY CONFLICT OR INCONSISTENCY BETWEEN THE PLANS, DETAILS AND SPECIFICATIONS, THE ONE REQUIRING GREATER QUANTITY OR SUPERIOR QUALITY SHALL PREVAIL, AS DECIDED IN WRITING BY THE ARCHITECT. ANY DISCREPANCY BETWEEN FIGURES AND DRAWINGS SHALL BE SUBMITTED TO THE ARCHITECT, WHO'S WRITTEN DECISION THEREON SHALL BE CONCLUSIVE.
25. ALL WORK, ALL MATERIALS, WHETHER INCORPORATED IN THE WORK OR NOT, ALL PROCESSES OR MANUFACTURE, AND ALL METHODS OF CONSTRUCTION, SHALL BE AT ALL TIMES AND PLACES, SUBJECT TO INSPECTION OF THE ARCHITECT WHO SHALL BE THE FINAL JUDGE OF THE QUALITY AND SUITABILITY OF THE ENGINEERING WORK. SHOULD THEY FAIL TO MEET THE ARCHITECT'S APPROVAL, THEY SHALL BE FORTHWITH RECONSTRUCTED, MADE GOOD, REPLACED AND/OR CORRECTED AS THE CASE MAY BE, BY THE CONTRACTOR AT THE CONTRACTOR'S OWN EXPENSE.
26. BEFORE PROCEEDING WITH THE LAYOUT OF CONSTRUCTION OR THE SETTING OF GRADE AND ALIGNMENT STAKES, THE CONTRACTOR SHALL ACCURATELY CHECK ALL CONTROL LINES, AXES CONTROL ELEVATIONS, AND BENCH MARKS TO VERIFY THAT THESE CONTROLLING ITEMS ARE IN AGREEMENT WITH THE DRAWINGS. SHOULD ANY DISCREPANCIES OCCUR, THE CONTRACTOR SHALL NOTIFY THE ARCHITECT FOR INSTRUCTIONS PRIOR TO COMMENCING WORK. IF THE CONTRACTOR FAILS TO CHECK THE ABOVE MENTIONED ITEMS FOR DISCREPANCIES AND DOES NOT NOTIFY THE ARCHITECT, THE CONTRACTOR SHALL BEAR THE COST OF ALL RESULTING CHANGES RELATED TO THAT PORTION OF THE WORK.
27. PROVISIONS SHALL BE MADE FOR CONTRIBUTORY DRAINAGE AT ALL TIMES. THE CONTRACTOR SHALL PROVIDE PROTECTIVE MEASURES AND TEMPORARY DRAINAGE AND DESILTING. FACILITIES TO PROTECT ADJOINING PROPERTIES AND THE PUBLIC RIGHT-OF-WAY FROM MUD, SILT AND STORM WATERS ORIGINATING ON OR DIVERTED FROM THE CONSTRUCTION SITE.
28. THE DRAWINGS FOR THIS PROJECT ARE DIVIDED INTO SEPARATE SHEETS FOR GENERAL CONVENIENCE ONLY. THE SHEET DESIGNATIONS OR NUMBERS SHALL NOT BE CONSIDERED TO LIMIT AREAS OF WORK, RESPONSIBILITY OR TRADES. THE CONTRACTOR SHALL REVIEW THE DRAWINGS, SPECIFICATION, AND PROJECT MANUAL AS REQUIRED TO COMPLETE THE PROJECT AS DESIGNED.
29. UNDERGROUND SERVICE ALERT: BEFORE COMMENCING ANY EXCAVATION, THE CONTRACTOR SHALL OBTAIN AN UNDERGROUND SERVICE ALERT (USA) INQUIRY I.D. NUMBER BY CALLING (800) 227-2600. TWO WORKING DAYS SHALL BE ALLOWED AFTER THE I.D. NUMBER IS OBTAINED AND BEFORE THE CONTRACTOR STARTS THE EXCAVATION WORK SO THAT UTILITY OWNERS CAN BE NOTIFIED. IF THE UTILITY OWNER IS THE CITY OF LOS ANGELES, A CONFIRMATION NUMBER INDICATING THE CITY HAS BEEN NOTIFIED SHALL BE OBTAINED BY USA AND/OR THE CONTRACTOR FROM THE APPROPRIATE CITY DEPARTMENT. THE I.D. NUMBER TOGETHER WITH THE DATE ACQUIRED SHALL BE REPORTED TO THE BUREAU OF CONTRACT ADMINISTRATION WHEN CALLING FOR INSPECTION. I.D. NUMBERS WILL NOT BE GIVEN MORE THAN 10 DAYS BEFORE STARTING EXCAVATION WORK.

SHEET INDEX

SHEET NO.	SHEET TITLE
C1.0	NOTES AND LEGEND
C2.0	DEMOLITION PLAN
C3.0	GRADING PLAN
C4.0	UTILITY PLAN SANITARY SEWER AND STORM DRAIN
C4.1	UTILITY PLAN WATER
C5.0	DETAILS
C5.1	DETAILS
C6.0	EROSION CONTROL PLAN

BENCH MARK

COUNTY OF VENTURA BENCHMARK NO. 12-148

AT THE NORTHWESTERLY CORNER OF THE INTERSECTION OF THE WESTERLY ENTRANCE TO VENTURA COLLEGE WITH TELEGRAPH ROAD AND CLAREMONT WAY, 75.0 FEET NORTHERLY FROM THE NORTHERLY CURB FACE OF TELEGRAPH ROAD, 10.0 FEET EASTERLY FROM A STREET LIGHT STANDARD. (NOTE: CLAREMONT WAY IS AN ENTRANCE TO VENTURA COLLEGE)

ELEVATION = 212.70 FEET (NAVD88 -1997 ADJUSTMENT)

****

COUNTY OF VENTURA BENCHMARK NO. H 16-102

AT THE INTERSECTION OF LOMA VISTA ROAD WITH PURDUE AVE. ON THE SOUTHERLY SIDE OF LOMA VISTA ROAD, 5.0 FEET WESTERLY FROM THE SOUTHERLY PROLONGATION OF CENTER OF PURDUE AVE.

ELEVATION = 245.52 FEET (NAVD88 -GPS MEASUREMENT)

DIVISION OF THE STATE ARCHITECT

IDENTIFICATION STAMP
DIV. OF THE STATE ARCHITECT
APP: 03-124589 INC:
REVIEWED FOR
SS ☑ FLS ☑ ACS ☑
DATE: 04/15/2025

VENTURA COUNTY COMMUNITY COLLEGE DISTRICT
MOORPARK OXNARD VENTURA

VENTURA COUNTY COMMUNITY COLLEGE DISTRICT
761 EAST DAILY DRIVE
CAMARILLO, CALIFORNIA 93010
TEL: (805) 652-5500

PROJECT TITLE AND SCHOOL LOCATION

VENTURA COMMUNITY COLLEGE STEM MODULAR BUILDING
VENTURA COMMUNITY COLLEGE
4667 TELEGRAPH RD.
VENTURA, CA 93003

COMMISSIONED ARCHITECT

AMADOR
amador whittle architects, inc.
28328 AGOURA RD, 203 | AGOURA HILLS CA, 91301 | 805-558-4334

CONSULTANT

MOLLENHAUER GROUP
CIVIL ENGINEERING
SURVEYING+MAPPING
LAND DEVELOPMENT
213 624 2661 TEL
919 W. GLENOAKS BLVD.,
2nd FLOOR
GLENDALE, CA 91202

STAMPS/SEALS

REGISTERED PROFESSIONAL ENGINEER
THOMAS M. TRAN
No. 82464
CIVIL
STATE OF CALIFORNIA

LICENSED ARCHITECT
WILLIAM JORGE AMADOR
C-20348
JANUARY 31, 2027
RENEWAL DATE
STATE OF CALIFORNIA

DSA V3 SUBMITTAL 03/21/2025

SHEET TITLE:

NOTES AND LEGEND

PROJECT NO.:	22-VCCCD-08	PROJECT ARCH:	Designer
DRAWN:	Author	CHECKED:	Checker
SHEET NUMBER:	C1.0		
DATE:		SHEET:	____ OF ____

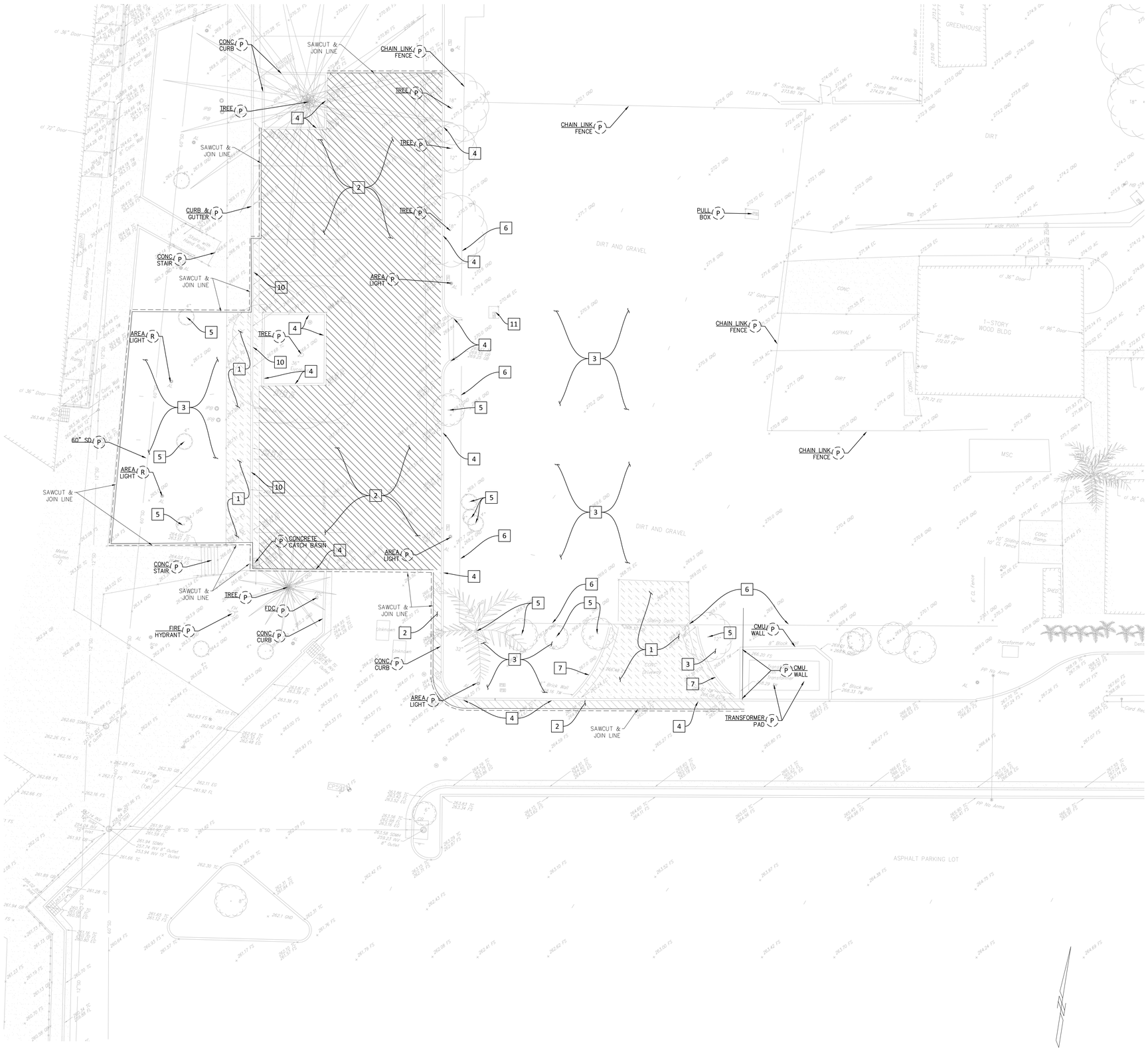

DEMOLITION NOTES:

1. CONCRETE PAVEMENT
2. ASPHALT CONCRETE PAVEMENT
3. CLEAR AND GRUB
4. CONCRETE CURB
5. TREE
6. CHAINLINK FENCE AND POST FOOTING
7. CMU WALL AND FOOTING
8. NOT USED
9. NOT USED
10. CONCRETE CURB AND GUTTER
11. PULL BOX

(A) ADJUST TO GRADE
(P) PROTECT IN PLACE
(R) RELOCATE EXISTING ITEMS, CONTRACTOR SHALL COORDINATE WITH OAR

DEMOLITION GENERAL NOTES:

1. REFER TO CIVIL AND ARCHITECTURAL DRAWINGS FOR ADDITIONAL DEMOLITION INFORMATION AND ANY UTILITIES WORK REQUIRED OUTSIDE OF LIMITS OF WORK.
2. PROTECT EXISTING UTILITY LINES IN PLACE UNLESS OTHERWISE NOTED.
3. FOR DEMOLITION OR RELOCATION OF UNDERGROUND UTILITIES SEE SITE GRADING PLANS.
4. THE CONTRACTOR SHALL PROVIDE NOTIFICATION TO OWNERS PRIOR TO DEMOLITION OF EXISTING WALL/FENCE.
5. THE CONTRACTOR SHALL TAKE NECESSARY MEASURES TO PROTECT THE INTEGRITY OF THE ADJACENT STRUCTURES, POWER POLES, AND ANY IMPROVEMENTS OF ADJACENT PROPERTIES DURING DEMOLITION AND CONSTRUCTION OF NEW FENCING AND WALLS.
6. THE CONTRACTOR SHALL REPAIR AND RESTORE ANY STRUCTURES OR ADJOINING WALLS THAT RE DAMAGED DURING DEMOLITION.
7. CONSTRUCTOR SHALL DOCUMENT LOCATION OF ADA PARKING STRIPING AND SYMBOLS FOR RESTORATION UPON COMPLETION OF PAVING WORK.

LEGEND:

LIMIT OF WORK

SAWCUT & JOIN LINE

REMOVE EXISTING CONCRETE PAVEMENT 1

REMOVE EXISTING ASPHALT CONCRETE PAVEMENT 2

ITEMS TO BE REMOVED UNLESS OTHERWISE NOTED.

DIVISION OF THE STATE ARCHITECT

IDENTIFICATION STAMP
DIV. OF THE STATE ARCHITECT
APP: 03-124589 INC:
REVIEWED FOR
SS ☑ FLS ☑ ACS ☑
DATE: 04/15/2025

VENTURA COUNTY COMMUNITY COLLEGE DISTRICT

761 EAST DAILY DRIVE
CAMARILLO, CALIFORNIA 93010
TEL: (805) 652-5500

PROJECT TITLE AND SCHOOL LOCATION

VENTURA COMMUNITY COLLEGE STEM MODULAR BUILDING
VENTURA COMMUNITY COLLEGE
4667 TELEGRAPH RD.
VENTURA, CA 93003

COMMISSIONED ARCHITECT

AMADOR

amador whittle architects, inc.
28328 AGOURA RD. 203 | AGOURA HILLS CA. 91301 | 805-558-4334

CONSULTANT

MOLLENHAUER GROUP
CIVIL ENGINEERING
SURVEYING+MAPPING
LAND DEVELOPMENT
213 624 2661 TEL
919 W. GLENOAKS BLVD.,
2nd FLOOR
GLENDALE, CA 91202

STAMPS/SEALS

REGISTERED PROFESSIONAL ENGINEER
THOMAS M. TRAN
No. 82464
CIVIL
STATE OF CALIFORNIA

LICENSED ARCHITECT
WILLIAM JORGE AMADOR
C-20348
JANUARY 31, 2027
RENEWAL DATE
STATE OF CALIFORNIA

DSA V3 SUBMITTAL 03/21/2025

SHEET TITLE:

DEMOLITION PLAN

PROJECT NO.: 22-VCCCD-08	PROJECT ARCH: Designer
DRAWN: Author	CHECKED: Checker
SHEET NUMBER: C2.0	
DATE:	SHEET: 5 OF

G:\Projects\Civil\LA.53354_Ventura College Civil Improvements_AMA\Design\Grading\Area 1\2024-11-22\AREAL_C-2.00_DEMOLITION PLAN.dwg Date: 12/18/24 05:32p trilau

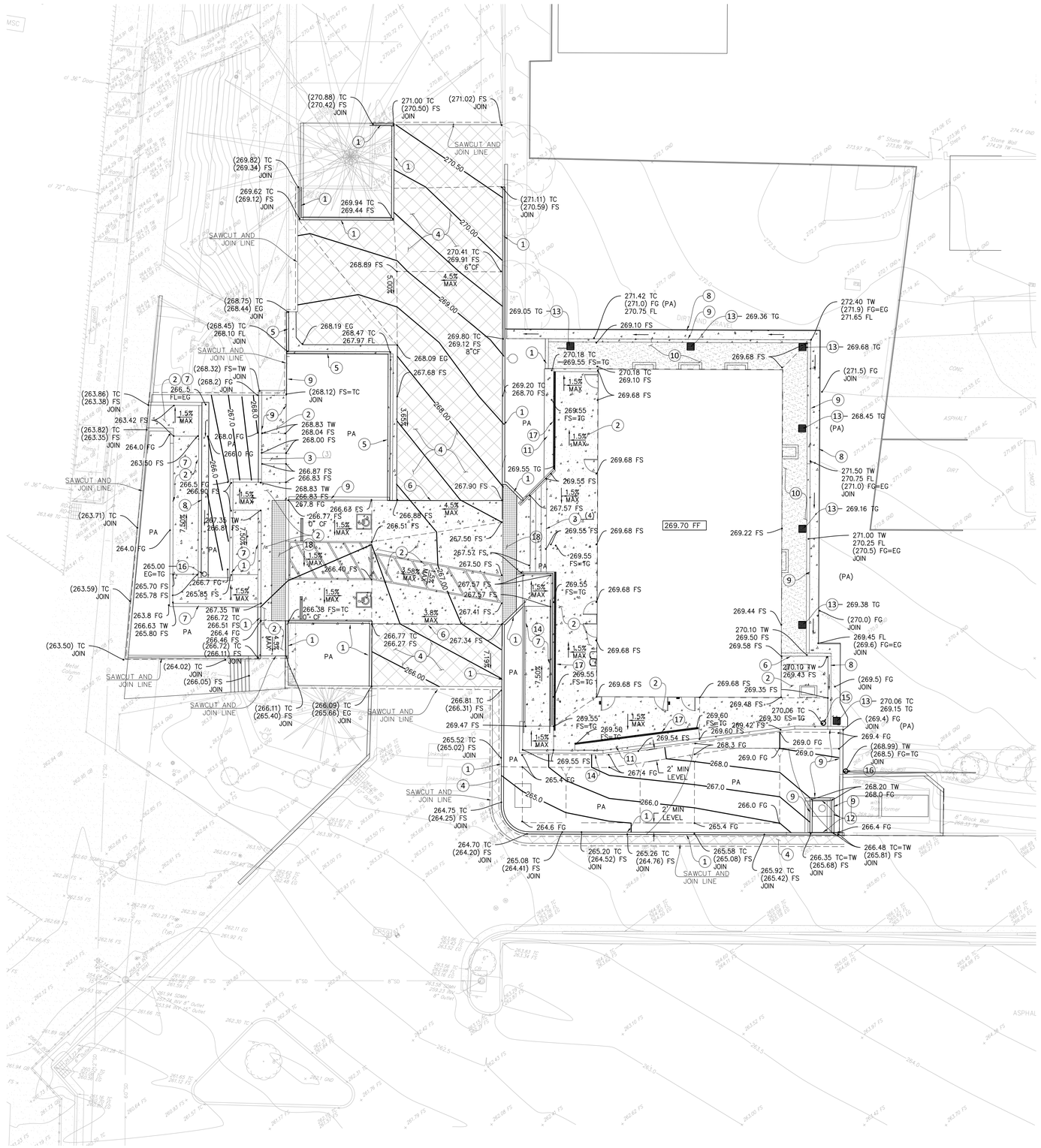

CONSTRUCTION NOTES:

1. CONCRETE CURB PER DETAIL 11/C5.0
2. CONCRETE PAVEMENT PER DETAIL 2/C5.0, TYPE PER PLAN
3. EQUAL CONCRETE RISERS SEE ARCHITECTURAL AND STRUCTURAL DETAILS 12/A501 AND 23/S011
4. ASPHALT CONCRETE PAVEMENT PER DETAIL 1/C5.0
5. CONCRETE CURB & GUTTER PER DETAIL 15/C5.1
6. THICKENED EDGE PER DETAIL 4/C5.0
7. CONCRETE RAMP AND HANDRAILS SEE ARCHITECTURAL AND STRUCTURAL PLANS AND DETAILS A401, A403 AND 18/S011
8. CONCRETE V-DRAIN PER DETAIL 14/C5.1 W=2'
9. PLANTER WALL, SEE ARCHITECTURAL PLANS FOR DETAILS
10. DECOMPOSED GRANITE, SEE LANDSCAPE ARCHITECTURAL DETAIL 13/L3.1
11. CONCRETE SEAT WALL, SEE ARCHITECTURAL DETAIL 7/A501
12. PARKWAY DRAIN, PER DETAIL 16/C5.1, SEE UTILITY PLAN
13. CONCRETE CATCH BASIN PER DETAIL 8/C5.0, SEE UTILITY PLAN.
14. RETAINING WALL, SEE ARCHITECTURAL AND STRUCTURAL PLANS AND DETAILS A501 AND 32/S012
15. AREA DRAIN PER DETAIL 9/C5.0, SEE UTILITY PLAN
16. PLANTER DRAIN PER DETAIL 10/C5.0, SEE UTILITY PLAN
17. TRENCH DRAIN PER DETAIL 12/C5.1, SEE UTILITY PLAN.
18. DETECTABLE WARNING STRIP. SEE ARCHITECTURAL DETAIL 10/A501

GENERAL NOTES:

1. ADJUST TO DESIGN GRADE TOP OF EXISTING VALVE BOXES AND VAULTS WITH IN AREAS TO BE REGRADED.
2. UNCLOG, CLEAN AND FLUSH THE WORK AREA DRAINAGE SYSTEM AFTER PAVING AND IMMEDIATELY BEFORE A RAIN FORECAST.
3. NO FILL TO BE PLACED, UNTIL THE CITY GRADING INSPECTOR HAS INSPECTED AND APPROVED THE BOTTOM EXCAVATION.
4. TEMPORARY EROSION CONTROL TO BE INSTALLED BETWEEN OCTOBER 1 AND APRIL 15. OBTAIN GRADING INSPECTOR'S AND DEPARTMENT OF PUBLIC WORKS APPROVAL OF PROPOSED PROCEDURES.
5. CONSTRUCT CONCRETE CONTRACTION JOINTS AT A MAXIMUM 10'X10' GRID. CONSTRUCT ISOLATION JOINTS WHERE CONCRETE PAVEMENT ABUT AGAINST STRUCTURES (I.E. WALLS, FOOTINGS, PULL BOXES....) CONTRACTOR TO PROVIDE SHOP DRAWINGS FOR ENGINEER REVIEW. SEE PROJECT SPECIFICATIONS FOR ADDITIONAL REQUIREMENTS.

LEGEND:

- ASPHALT CONCRETE PAVEMENT PER DETAIL 1/C5.0
- CONCRETE PAVEMENT PER DETAIL 2/C5.0
- DECOMPOSED GRANITE

10' 5' 0' 5' 10' 20'
GRAPHIC SCALE
SCALE : 1"= 10'

DIVISION OF THE STATE ARCHITECT

IDENTIFICATION STAMP
DIV. OF THE STATE ARCHITECT
APP: 03-124589 INC:
REVIEWED FOR
SS ☑ FLS ☑ ACS ☑
DATE: 04/15/2025

VENTURA COUNTY COMMUNITY COLLEGE DISTRICT
761 EAST DAILY DRIVE
CAMARILLO, CALIFORNIA 93010
TEL: (805) 652-5500

PROJECT TITLE AND SCHOOL LOCATION

VENTURA COMMUNITY COLLEGE STEM MODULAR BUILDING
VENTURA COMMUNITY COLLEGE
4667 TELEGRAPH RD.
VENTURA, CA 93003

COMMISSIONED ARCHITECT

AMADOR
amador wildlife architects, inc.
28328 AGOURA RD, 203 | AGOURA HILLS CA, 91301| 805-558-4334

CONSULTANT

MOLLENHAUER GROUP
CIVIL ENGINEERING
SURVEYING+MAPPING
LAND DEVELOPMENT
213 624 2661 TEL
919 W. GLENOAKS BLVD.,
2nd FLOOR
GLENDALE, CA 91202

STAMPS/SEALS

REGISTERED PROFESSIONAL ENGINEER THOMAS M. TRAN No. 82464 CIVIL STATE OF CALIFORNIA

LICENSED ARCHITECT WILLIAM DRRE AMADOR C-20348 JANUARY 31, 2027 RENEWAL DATE STATE OF CALIFORNIA

DSA V3 SUBMITTAL 03/21/2025

SHEET TITLE:

GRADING PLAN

PROJECT NO.: 22-VCCCD-08	PROJECT ARCH: Designer
DRAWN: Author	CHECKED: Checker
SHEET NUMBER: C3.0	
DATE:	SHEET: 5 OF ___

G:\Projects\Civil\LA3235A_Ventura College Civil Improvements_AWA\Design\Grading\Area 1\2025-03-03\AREA1_C-3.00_GRADING.dwg Date:03/06/25 09:59a lvilau

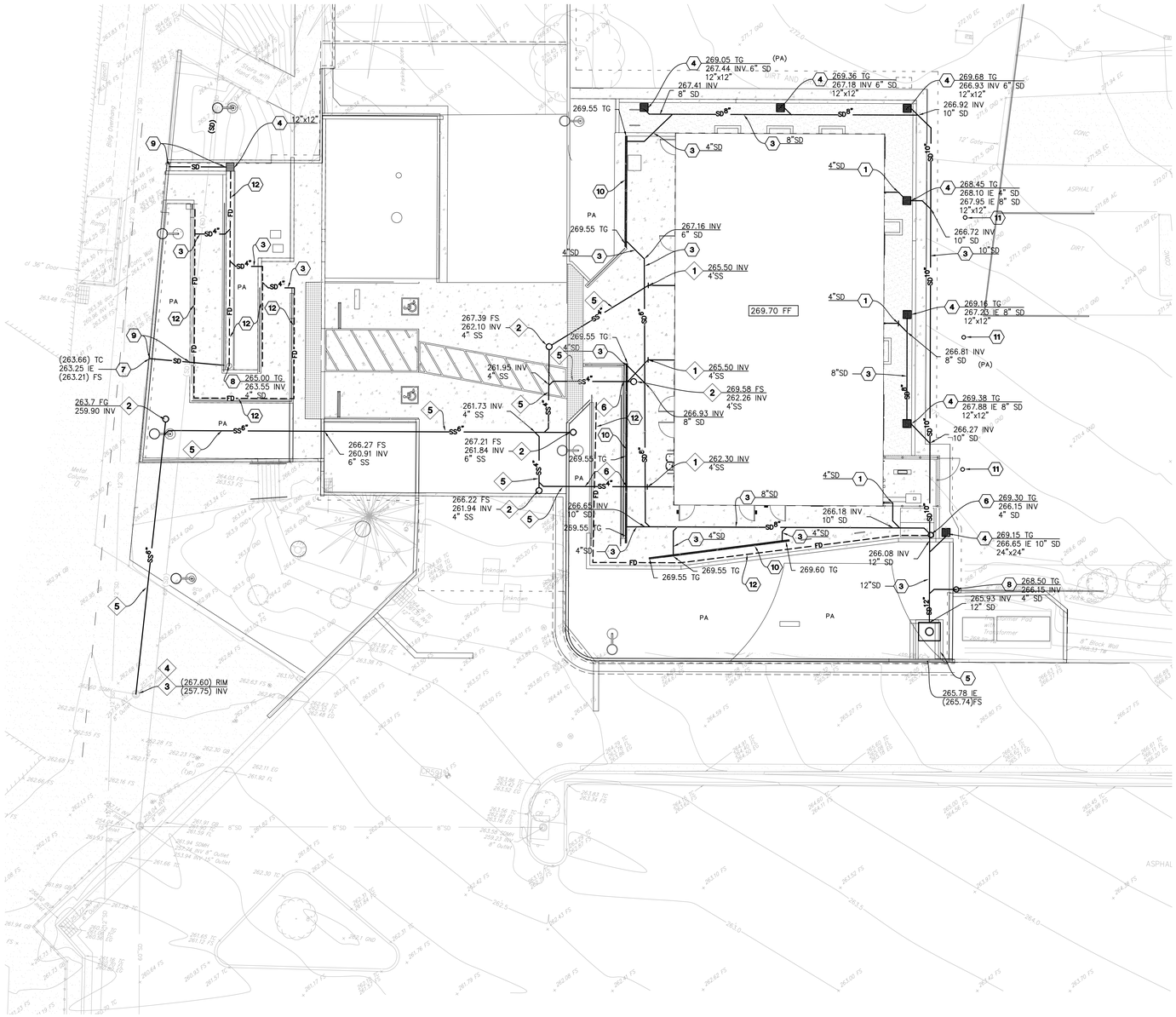

STORM DRAIN NOTES:

1. POINT OF CONNECTION, FOR CONTINUATION SEE PLUMBING DRAWING
2. CLEANOUT PER DETAIL 7/C5.0
3. SOLID PVC PIPE SCHEDULE 40 DWV SIZE PER PLAN
4. CONCRETE CATCH BASIN PER DETAIL 8/C5.0
5. PARKWAY DRAIN PER SPPWC-151-2, S=36" INLET PYPE I 16/C5.1
6. AREA DRAIN PER DETAIL 9/C5.0
7. 3"x5" RECTANGULAR CAST IRON PIPE THROUGH CURB FACE
8. PLANTER DRAIN PER DETAIL 10/C5.0
9. 3"X5" RECTANGULAR CAST IRON PIPE
10. TRENCH DRAIN PER DETAIL 12/C5.1
11. DRYWELL, SEE PLUMBING PLAN P301 FOR DETAILS
12. RETAINING WALL FOOTING DRAIN PER DETAIL 17/C5.1

SANITARY SEWER NOTES:

1. POINT OF CONNECTION. FOR CONTINUATION SEE PLUMBING DRAWING
2. CLEANOUT PER DETAIL 7/C5.0
3. POINT OF CONNECTION TO EXISTING MANHOLE
4. BREAK INTO EXISTING MANHOLE PER STANDARD PLAN SPPWC-208-2
5. SOLID PVC PIPE, SCHEDULE 40 DWV, SIZE PER PLAN
6. CONSTRUCT 4" THICK CONCRETE ENCASEMENT WHERE PIPE CROSS BENEATH RETAINING WALL

GENERAL NOTES:

1. ALL PIPES SHALL BE BEDDED IN ACCORDANCE WITH DETAIL 8 ON SHEET C5.0 AND SPECIFICATIONS.
2. DOMESTIC WATER SERVICE LINES SHALL HAVE A MINIMUM OF 30" OF COVER OVER THE TOP OF PIPE.
3. UNCLOG, CLEAN AND FLUSH THE WORK AREA DRAINAGE SYSTEM AFTER PAVING AND IMMEDIATELY BEFORE A RAIN FORECAST.
4. COORDINATE WITH UTILITIES SHOWN ON C4.0 AND ELECTRICAL DRAWINGS
5. PROVIDE A MINIMUM OF 12" VERTICAL CLEARANCE AT CROSSING BETWEEN SANITARY SEWER PIPE AND WATER PIPE OUTER DIAMETER. CONSTRUCT SANITARY SEWER LINE BENEATH WATER PIPE AT CROSSING

PIPE MATERIALS TO BE USED ON PROJECT:

1. SEWER:
   A. PVC SCHEDULE 40 DWV
2. STORM DRAINAGE
   A. PVC SCHEDULE 40 DWV

LEGEND:

—— SD ——	PROPOSED STORM DRAIN SIZE PER PLAN
——(SD)——	EXISTING STORM DRAIN
—— SS ——	PROPOSED SANITARY SEWER SIZE PER PLAN
——(SS)——	EXISTING SANITARY SEWER
— — FD — —	FOOTING DRAIN

10' 5' 0' 5' 10' 20'

GRAPHIC SCALE
SCALE : 1"= 10'

DIVISION OF THE STATE ARCHITECT

IDENTIFICATION STAMP
DIV. OF THE STATE ARCHITECT
APP: 03-124589 INC:
REVIEWED FOR
SS ☑ FLS ☑ ACS ☑
DATE: 04/15/2025

VENTURA COUNTY COMMUNITY COLLEGE DISTRICT
761 EAST DAILY DRIVE
CAMARILLO, CALIFORNIA 93010
TEL: (805) 652-5500

PROJECT TITLE AND SCHOOL LOCATION

VENTURA COMMUNITY COLLEGE STEM MODULAR BUILDING
VENTURA COMMUNITY COLLEGE
4667 TELEGRAPH RD.
VENTURA, CA 93003

COMMISSIONED ARCHITECT

AMADOR

amador whittle architects, inc.
28328 AGOURA RD. 203 | AGOURA HILLS CA. 91301 | 805-558-4334

CONSULTANT

MOLLENHAUER GROUP
CIVIL ENGINEERING
SURVEYING+MAPPING
LAND DEVELOPMENT
213 624 2661 TEL
919 W. GLENOAKS BLVD.,
2nd FLOOR
GLENDALE, CA 91202

STAMPS/SEALS

REGISTERED PROFESSIONAL ENGINEER
THOMAS M. TRAN
No. 82464
CIVIL
STATE OF CALIFORNIA

LICENSED ARCHITECT
WILLIAM JORGE AMADOR
C-20348
JANUARY 31, 2027
RENEWAL DATE
STATE OF CALIFORNIA

DSA V3 SUBMITTAL 03/21/2025

SHEET TITLE:

UTILITY PLAN SANITARY SEWER AND STORM DRAIN

PROJECT NO.: 22-VCCCD-08	PROJECT ARCH: Designer
DRAWN: Author	CHECKED: Checker
SHEET NUMBER: C4.0	
DATE:	SHEET: 5 OF ___

G:\Projects\Civil\JL50354_Ventura College Civil Improvements_AMA\Design\Grading\Area 1\2025-03-03\AREA1_C-4.00_UTILITY.dwg Date:03/06/25 10:00a trilou

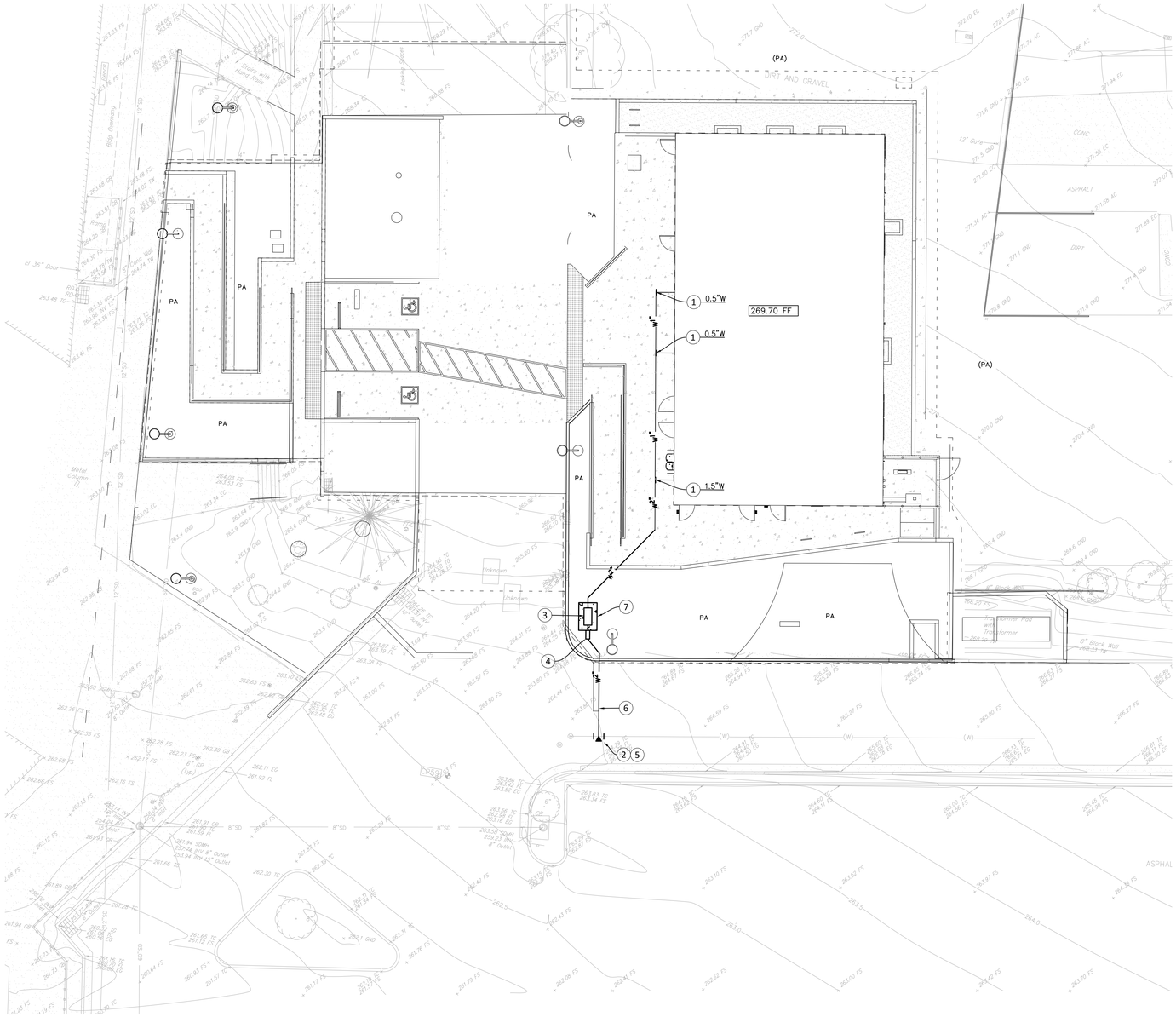

WATER NOTES:

1. POINT OF CONNECTION. SEE PLUMBING PLANS FOR CONTINUATION
2. HOT TAP SADDLE CONNECTION
3. REDUCE PRESSURE PRINCIPAL ASSEMBLY BACKFLOW DEVICE PER DETAIL 13/C5.1
4. CURB VALVE IN YARD BOX
5. POINT OF CONNECTION TO EXISTING MAIN
6. DOMESTIC WATER SERVICE PER DETAIL 12/C5.0
7. 4" MINIMUM THICK CONCRETE PAD, SEE ARCHITECTURAL DETAIL 6/A502

GENERAL NOTES:

1. ALL PIPES SHALL BE BEDDED IN ACCORDANCE WITH DETAIL 8 ON SHEET C5.0 AND SPECIFICATIONS.
2. DOMESTIC WATER SERVICE LINES SHALL HAVE A MINIMUM OF 30" OF COVER OVER THE TOP OF PIPE.
3. UNCLOG, CLEAN AND FLUSH THE WORK AREA DRAINAGE SYSTEM AFTER PAVING AND IMMEDIATELY BEFORE A RAIN FORECAST.
4. COORDINATE WITH UTILITIES SHOWN ON C4.0 AND ELECTRICAL DRAWINGS
5. PROVIDE A MINIMUM OF 12" VERTICAL CLEARANCE AT CROSSING BETWEEN SANITARY SEWER PIPE AND WATER PIPE OUTER DIAMETER. CONSTRUCT SANITARY SEWER LINE BENEATH WATER PIPE AT CROSSING

PIPE MATERIALS TO BE USED ON PROJECT:

1. DOMESTIC WATER:
   A. 3" AND SMALLER: TYPE K, HARD COPPER WATER TUBING

   PROVIDE APPROVED CORROSION PROTECTIVE WRAPPING FOR BELOW GRADE COPPER PIPES.

LEGEND:

—— W —— PROPOSED WATER SIZE PER PLAN

——(W)—— EXISTING WATER

10' 5' 0' 5' 10' 20'

GRAPHIC SCALE
SCALE : 1"= 10'

DIVISION OF THE STATE ARCHITECT

IDENTIFICATION STAMP
DIV. OF THE STATE ARCHITECT
APP: 03-124589 INC:
REVIEWED FOR
SS ☑ FLS ☑ ACS ☑
DATE: 04/15/2025

VENTURA COUNTY COMMUNITY COLLEGE DISTRICT
761 EAST DAILY DRIVE
CAMARILLO, CALIFORNIA 93010
TEL: (805) 652-5500

PROJECT TITLE AND SCHOOL LOCATION

VENTURA COMMUNITY COLLEGE STEM MODULAR BUILDING
VENTURA COMMUNITY COLLEGE
4667 TELEGRAPH RD.
VENTURA, CA 93003

COMMISSIONED ARCHITECT

AMADOR
amador wildlife architects, inc.
28328 AGOURA RD. 203 | AGOURA HILLS CA. 91301 | 805-658-4334

CONSULTANT

MOLLENHAUER GROUP
CIVIL ENGINEERING
SURVEYING+MAPPING
LAND DEVELOPMENT
213 624 2661 TEL
919 W. GLENOAKS BLVD.,
2nd FLOOR
GLENDALE, CA 91202

STAMPS/SEALS

REGISTERED PROFESSIONAL ENGINEER
THOMAS M. TRAN
No. 82464
CIVIL
STATE OF CALIFORNIA

LICENSED ARCHITECT
WILLIAM JORGE AMADOR
C-20348
JANUARY 31, 2027
RENEWAL DATE
STATE OF CALIFORNIA

DSA V3 SUBMITTAL 03/21/2025

SHEET TITLE:

UTILITY PLAN
WATER

PROJECT NO.: 22-VCCCD-08	PROJECT ARCH: Designer
DRAWN: Author	CHECKED: Checker
SHEET NUMBER: C4.1	
DATE:	SHEET: 5 OF ___

G:\Projects\Civil\LA.53354_Ventura College Civil Improvements_AMA\Design\Grading\Area 1\2025-03-03\AREA1_C-4.00_UTILITY.dwg Date:03/06/25 10:00a trilou

LOCATION	ASPHALT CONCRETE		BASE COURSE		
	THICKNESS	CLASS	THICKNESS EXISTING PAVED SITE	TYPE	GRADE
PARKING, FIRE LANE	6"	STATE ½"MIX	8"	CAB	FINE

LEGEND:

1. A.C. SURFACING
2. 2 COATS OF SURFACE SEAL
3. BASE COURSE. COMPACT TO 95%
4. 12" SUB-GRADE. COMPACT TO 95%.
5. A.C. SURFACING STATE ½" MIX (3" MAX.)
6. A.C. SURFACING STATE ¾" MIX

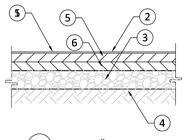

A OVER 3" THICK

ASPHALT CONCRETE PAVEMENT — N.T.S. — 1

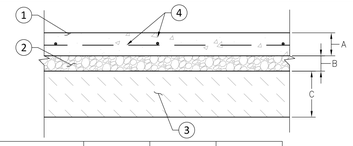

LOCATION	A	B	C
WALKWAYS	5"	4"	12"
DRIVEWAYS	8"	6"	12"

LEGEND:

1. PORTLAND CEMENT CONCRETE PAVEMENT CONSTRUCT WITH f'_c=4000 PSI COMPRESSIVE STRENGTH
2. CRUSHED AGGREGATE BASE COMPACT TO 95% OF MAXIMUM DENSITY
3. REMOVE AND RECOMPACT THE UPPER 24". COMPACT SUB-GRADE TO 95% RELATIVE COMPACTION
4. #4 BARS @ 16" ON CENTER EACH WAY. CENTER BARS IN PAVEMENT

NOTES:

1. SEE DETAIL 5 HEREON FOR CONCRETE JOINT DETAILS. REFERENCE SPECIFICATIONS FOR ADDITIONAL INFORMATION.
2. THE UPPER 1 FOOT OF SOIL SUBGRADE IN AREAS TO RECEIVE NEW ON-GRADE CONCRETE SHOULD BE COMPACTED TO A MINIMUM OF 95 PERCENT OF THE MAXIMUM DRY DENSITY DETERMINED FROM ASTM D1557. THE SUBGRADE SHOULD BE REMOVED AND PROCESSED TO PEA-SIZED CONSISTENCY OR FINER AT BETWEEN 0 AND 2 PERCENT ABOVE OPTIMUM MOISTURE CONTENT PRIOR TO RECOMPACTION. SEE GEOTECHNICAL REPORT FOR ADDITIONAL INFORMATION

PORTLAND CEMENT CONCRETE PAVEMENT — N.T.S. — 2

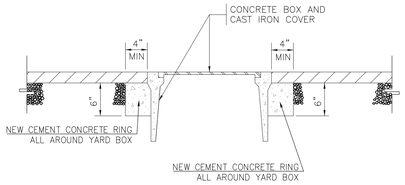

NOTES:

1. "BROOKS" YARD BOX OR EQUAL WITH 9-1/2"x16" I.D. CONCRETE BOX (NO. 3 BODY) WITH 3-TL CAST IRON TRAFFIC COVER, UTILITY NAME (WATER, STORM DRAIN, SANITARY SEWER, POWER SPRINKLER, ETC.) EMBOSSED 1/16" ABOVE SURFACE, 1" HIGH UPPERCASE.
2. ALL METAL PARTS SHALL BE HOT-DIPPED GALVANIZED AFTER FABRICATION

YARD BOX — N.T.S. — 3

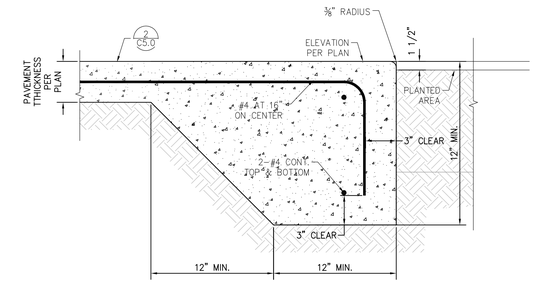

THICKENED EDGE — N.T.S. — 4

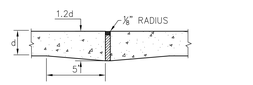

TYPE A
EXPANSION JOINT

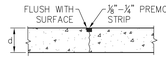

TYPE D
SAWED OR PREMOLDED STRIP LONGITUDINAL OR TRANSVERSE CONTRACTION JOINT

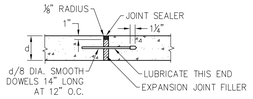

TYPE A
ALTERNATE EXPANSION JOINT

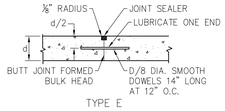

TYPE E
PLANNED TRANSVERSE CONSTRUCTION JOINT (USED AT NORMAL JOINT SPACING)

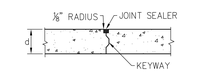

TYPE B
LONGITUDINAL CONSTRUCTION JOINT

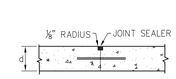

TYPE F
EMERGENCY TIED TRANSVERSE CONSTRUCTION JOINT (USED AT MIDDLE THIRD OF NORMAL JOINT SPACING)

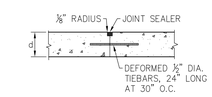

TYPE C
TIED BUTT LONGITUDINAL CONSTRUCTION JOINT

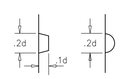

KEYWAYS FOR TYPE B AND F CONSTRUCTION JOINTS

CONCRETE JOINT DETAIL — N.T.S. — 5

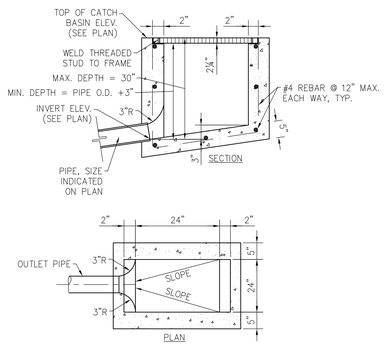

NOTES:

1. USE 3/4" DIA. PIPE BAR SPACERS ASSEMBLED ON (2) 1/2" DIA RODS WITH THREADS AND NUTS AT BOTH ENDS.
2. ALL METAL PARTS SHALL BE HOT-DIP GALVANIZED AFTER FABRICATION AND WELDING, AND BEFORE ASSEMBLY.
3. FRAME AND GRATE SHALL BE SIMILAR TO ALHAMBRA FOUNDRY CO., LTD. SERIES OR BROOKS PRODUCTS, INC. OR APPROVED EQUAL.
4. GRATES SHALL BE OF VANDAL-RESISTANT CONSTRUCTION AND WITH ¾" MAX. GRATE OPENINGS.
5. FORM "X" AND "Y" TO FIT FRAME.

TYPE	TRAFFIC LOADING	STEEL BARS	CLEAR BAR SPACING
I	NON-VEHICULAR	3/8" x 1-1/2"	1/2"
I I	VEHICULAR	1/2" x 2-1/4"	1/2"

CONCRETE CATCH BASIN — N.T.S. — 6

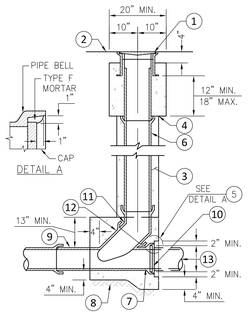

LEGEND:

1. GALVANIZED CAST IRON FRAME AND COVER J. R. SMITH 4231 OR APPROVED EQUIVALENT
2. FINISH SURFACE PER PLAN
3. 4" THICK PORTLAND CEMENT CONCRETE ENCASEMENT
4. CONSTRUCTION JOINT
5. TYPE "F" MORTAR
6. 6" RISER
7. ELEVATION PER PLAN
8. UNDISTURBED EARTH
9. MAIN LINE SEE PLAN
10. CAP
11. 45° BEND
12. WYE
13. PIPE, WHERE OCCURS

CLEANOUT — N.T.S. — 7

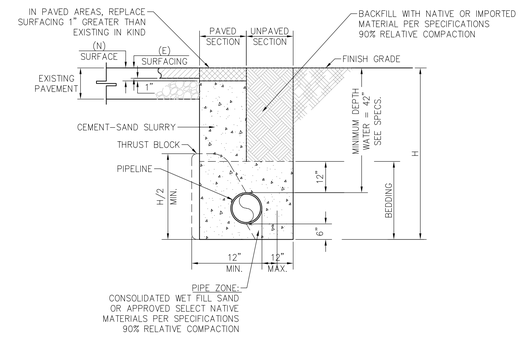

NARROW UNSUPPORTED VERTICAL WALLED TRENCH WIDTH

NOMINAL PIPE DIAMETER (INCHES)	NARROW TRENCH WIDTH MIN. (INCHES)
4	18
6	18
8	24
12	30

NOTE:

PAVEMENT FINISH SURFACE SHALL BE A SMOOTH CONTINUATION OF ADJOINING PAVED SURFACE.

PIPE BEDDING — N.T.S. — 8

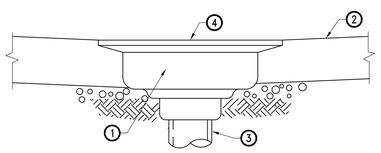

LEGEND:

1. GALVANIZED CAST IRON AREA DRAIN, JR SMITH MODEL 2110 G-U-B.
2. PAVEMENT SECTION PER PLAN.
3. 4" DIAMETER PIPE SIZE.
4. TOP OF DRAIN ELEVATION PER PLAN.

AREA DRAIN — N.T.S. — 9

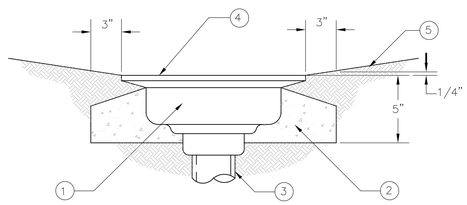

LEGEND:

1. GALVANIZED CAST IRON AREA DRAIN JR SMITH MODEL 2110 G-U-B.
2. PORTALAND CEMENT CONCRETE PAD (PAD MAY BE EITHER ROUND OR SQUARE IN PLAN VIEW).
3. PIPE SIZE PER PLAN.
4. TOP OF DRAIN ELEVATION PER PLAN.
5. FINISH GRADE PER PLAN.

PLANTER DRAIN — N.T.S. — 10

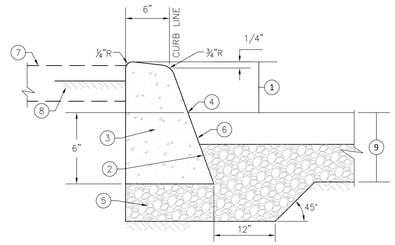

LEGEND:

1. CURB FACE (CF) SHALL BE 6" UNLESS OTHERWISE INDICATED.
2. BATTER 1½:12.
3. PORTLAND CEMENT CONCRETE.
4. ELEVATION PER PLAN UNLESS OTHERWISE INDICATED.
5. BASE MATERIAL TO BE SAME THICKNESS AS ADJOINING PAVEMENT.
6. TACK COAT WHERE CURB ABUTS ASPHALT CONCRETE PAVEMENT.
7. SIDEWALK WHERE OCCURS (PREVENT BOND BETWEEN SIDEWALK AND CURB).
8. FINISH GRADE IN PLANTER AREAS TO BE 1½" BELOW TOP OF CURB.
9. PAVEMENT SECTION PER PLAN.

CONCRETE CURB — N.T.S. — 11

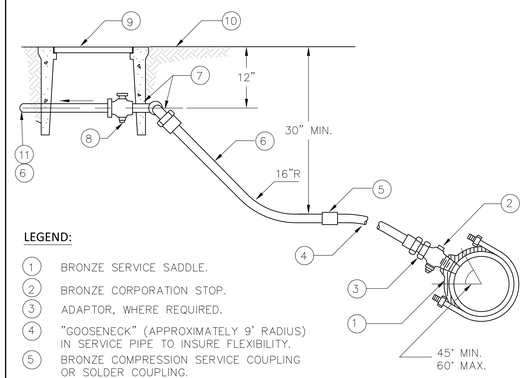

LEGEND:

1. BRONZE SERVICE SADDLE.
2. BRONZE CORPORATION STOP.
3. ADAPTOR, WHERE REQUIRED.
4. "GOOSENECK" (APPROXIMATELY 9' RADIUS) IN SERVICE PIPE TO INSURE FLEXIBILITY.
5. BRONZE COMPRESSION SERVICE COUPLING OR SOLDER COUPLING.
6. TYPE K COPPER TUBING, SIZE PER PLAN.
7. ELBOW/STREET ELBOW.
8. CURB VALVE.
9. PRECAST CONCRETE METER BOX WITH CAST IRON COVER, LOCATION PER PLAN.
10. FINISH SURFACE PER PLAN.
11. CONNECT TO REDUCE PRESSURE BACK FLOW ASSEMBLY

DOMESTIC WATER SERVICE — N.T.S. — 12

DIVISION OF THE STATE ARCHITECT

IDENTIFICATION STAMP
DIV. OF THE STATE ARCHITECT
APP: 03-124589 INC:
REVIEWED FOR
SS ☑ FLS ☑ ACS ☑
DATE: 04/15/2025

VENTURA COUNTY COMMUNITY COLLEGE DISTRICT
761 EAST DAILY DRIVE
CAMARILLO, CALIFORNIA 93010
TEL: (805) 652-5500

PROJECT TITLE AND SCHOOL LOCATION

VENTURA COMMUNITY COLLEGE STEM MODULAR BUILDING
VENTURA COMMUNITY COLLEGE
4667 TELEGRAPH RD.
VENTURA, CA 93003

COMMISSIONED ARCHITECT

AMADOR

amador whittle architects, inc.
28328 AGOURA RD. 203 | AGOURA HILLS CA. 91301 | 805-558-4334

CONSULTANT

MOLLENHAUER GROUP
CIVIL ENGINEERING
SURVEYING+MAPPING
LAND DEVELOPMENT
213 624 2661 TEL
919 W. GLENOAKS BLVD.,
2nd FLOOR
GLENDALE, CA 91202

STAMPS/SEALS

REGISTERED PROFESSIONAL ENGINEER THOMAS M. TRAN No. 82464 CIVIL STATE OF CALIFORNIA

LICENSED ARCHITECT WILLIAM JORGE AMADOR C-20348 JANUARY 31, 2027 RENEWAL DATE STATE OF CALIFORNIA

DSA V3 SUBMITTAL 03/21/2025

SHEET TITLE:

DETAILS

PROJECT NO.: 22-VCCCD-08 | PROJECT ARCH: Designer
DRAWN: Author | CHECKED: Checker
SHEET NUMBER: C5.0
DATE: | SHEET: 5 OF

G:\Projects\Civil\LA30354_Ventura College Civil Improvements_AWA\Design\Grading\Area 1\2024-11-21\AREA1_C-5.00_DETAIL.dwg Date:12/18/24 05:25p trilau

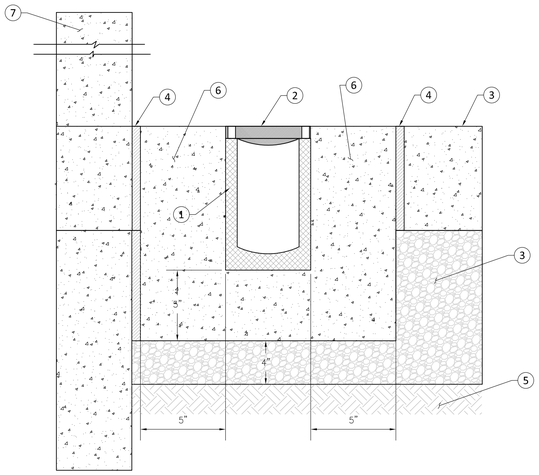

LEGEND:

1. ACO K100 MODULAR TRENCH DRAIN
2. ACO KS100 STEEL GRATE, VANDAL PROOF, ADA COMPLIANT AND HEEL PROOF.
3. PAVEMENT SECTION PER PLAN
4. EXPANSION JOINT
5. 95% COMPACTED SUBGRADE
6. CONCRETE 4000 PSI COMPRESSIVE STRENGTH
7. SEE ARCHITECTURAL PLANS FOR RETAINING WALL/SEAT WALL WHERE OCCURS.
8. CRUSHED AGGREGATE BASE COMPACTED TO 95%

TRENCH DRAIN

N.T.S. 12

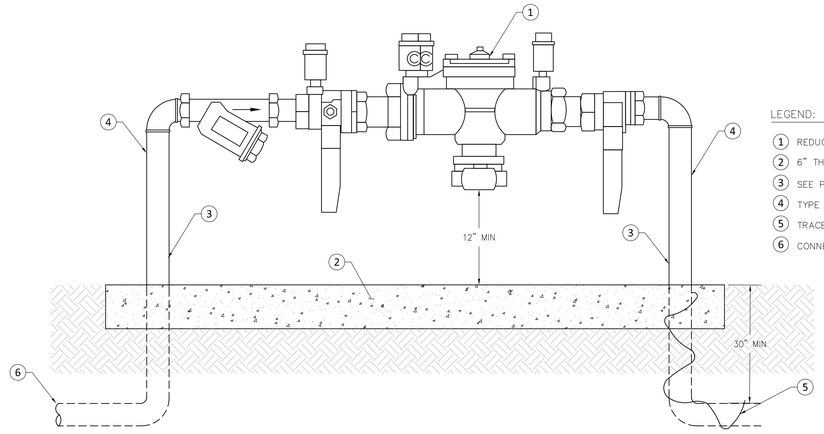

LEGEND:

1. REDUCED PRESSURE ZONE ASSEMBLIES, 2" WATTS, MODEL LF009
2. 6" THICK PORTLAND CEMENT CONCRETE PAD
3. SEE PLAN FOR WATER LINE SIZE
4. TYPE K HARD ROPPER PIPE, SIZE PER PLAN
5. TRACER WIRE
6. CONNECT TO CURB STOP

REDUCED PRESSURE ZONE ASSEMBLIES

N.T.S. 13

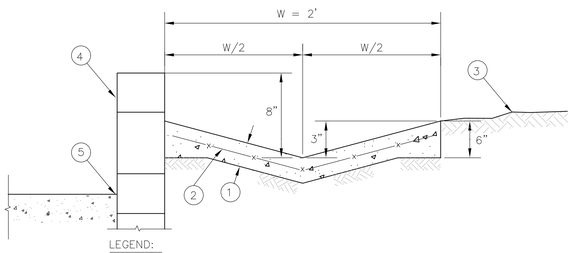

LEGEND:

1. 4" THICK MINIMUM PORTLAND CEMENT CONCRETE, 3000 PSI COMPRESSIVE STRENGTH
2. 6x6 – W1.4 x W1.4 WELDED WIRE FABRIC.
3. FINISH GRADE PER PLAN.
4. PLANTER WALL, SEE ARCHITECTURAL PLAN FOR DETAILS
5. FINISH SURFACE PER PLAN

CONCRETE V – DRAIN

N.T.S. 14

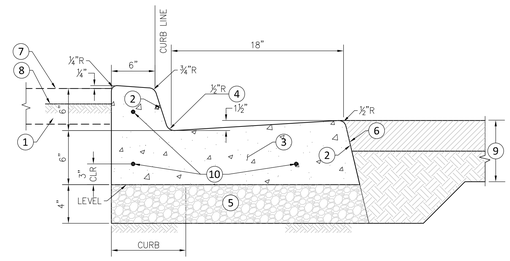

NOTES:

1. CURB FACE (CF) SHALL BE 6" UNLESS OTHERWISE INDICATED.
2. BATTER 1½:12.
3. PORTLAND CEMENT CONCRETE.
4. ELEVATION PER PLAN UNLESS OTHERWISE INDICATED.
5. BASE MATERIAL TO BE SAME THICKNESS AS ADJOINING PAVEMENT.
6. TACK COAT WHERE GUTTER ABUTS ASPHALT CONCRETE PAVEMENT.
7. SIDEWALK WHERE OCCURS (PREVENT BOND BETWEEN SIDEWALK AND CURB).
8. FINISH GRADE IN PLANTER AREAS TO BE 1 1/2" BELOW TOP OF CURB.
9. PAVEMENT SECTION PER PLAN.
10. 3 – #4 BARS, CONTINUOUS.

CONCRETE CURB AND GUTTER

N.T.S. 15

N.T.S.

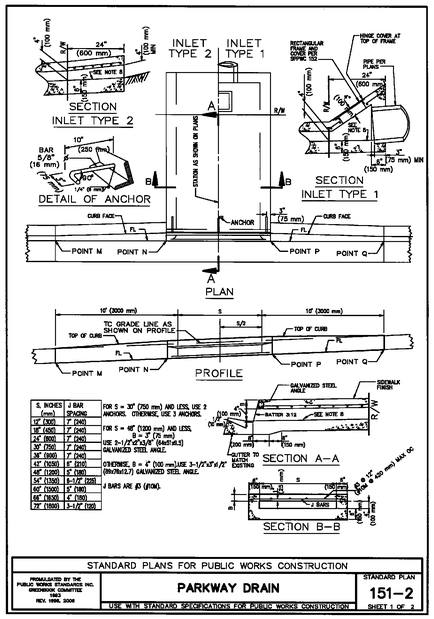

NOTES

1. FLOOR OF BOX SHALL BE TROWELED SMOOTH.
2. IF THE TOE OF SLOPE IS ALLOWED WITHIN THE R/W, INLET TYPE 1 BEGINS AT THE TOE RATHER THAN AT THE R/W LINE.
3. FOR OPEN DITCH (TYPE 2), THE 24" (600 mm) EXTENSION BEYOND THE R/W LINE IS NOT REQUIRED WHEN BACK OF WALK IS 24" (600 mm) OR MORE FROM THE R/W LINE. HOWEVER, THE PIPE SHALL EXTEND TO THE R/W LINE IN ANY EVENT.
4. TOP OF INLET STRUCTURE (TYPE 1 & 2) SHALL BE FLUSH WITH ADJACENT SURFACE WHERE PRACTICAL.
5. A HEADED STEEL STUD 5/8" x 6–3/8" WITH A 1" HEAD (16 x 160 mm, 25 mm HEAD) ATTACHED BY A FULL PENETRATION BUTT WELD MAY BE USED AS AN ALTERNATE ANCHOR.
6. NORMAL CURB FACE AT POINT M AND Q. CURB FACE IS B + 5" (125 mm) AT POINT N AND P.
7. THE 3" (75 mm) LEG OF THE 5/8" (16 mm) DIA ANCHORS SHALL BE PARALLEL TO THE TOP OF SIDEWALK.
8. SLOPE = 2.0%

STANDARD PLANS FOR PUBLIC WORKS CONSTRUCTION — PARKWAY DRAIN — STANDARD PLAN 151–2 — SHEET 2 OF 2

PARKWAY DRAIN

N.T.S. 16

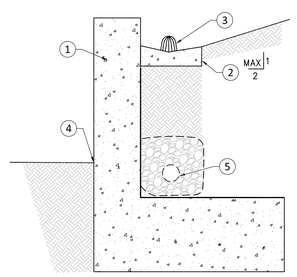

LEGEND:

1. RETAINING WALL, SEE STRUCTURAL PLAN
2. CONCRETE V–GUTTER, WHERE OCCURS
3. PLANTER DRAIN, WHERE OCCURS
4. FINISH SURFACE, ELEVATION PER PLAN
5. ONE CUBIC FOOT OF 3/4" CLEAN CRUSHED DRAINAGE ROCKS, WRAPPED WITHIN FILTER FABRIC. 4" DIAMETER PERFORATED PIPE. HOLES DOWN, SLOPING AT 1% MINIMUM, CENTERED IN ROCK POCKET, CONTINUOUS

RETAINING WALL FOOTING DRAIN

N.T.S. 17

DIVISION OF THE STATE ARCHITECT

IDENTIFICATION STAMP
DIV. OF THE STATE ARCHITECT
APP: 03-124589 INC:
REVIEWED FOR
SS ☑ FLS ☑ ACS ☑
DATE: 04/15/2025

VENTURA COUNTY COMMUNITY COLLEGE DISTRICT

761 EAST DAILY DRIVE
CAMARILLO, CALIFORNIA 93010
TEL: (805) 652-5500

PROJECT TITLE AND SCHOOL LOCATION

VENTURA COMMUNITY COLLEGE STEM MODULAR BUILDING

VENTURA COMMUNITY COLLEGE
4667 TELEGRAPH RD.
VENTURA, CA 93003

COMMISSIONED ARCHITECT

AMADOR

amador wildlife architects, inc.
28328 AGOURA RD. 203 | AGOURA HILLS CA. 91301 | 805-658-4334

CONSULTANT

MOLLENHAUER GROUP
CIVIL ENGINEERING
SURVEYING+MAPPING
LAND DEVELOPMENT
213 624 2661 TEL
919 W. GLENOAKS BLVD.,
2nd FLOOR
GLENDALE, CA 91202

STAMPS/SEALS

REGISTERED PROFESSIONAL ENGINEER — THOMAS M. TRAN — No. 82464 — CIVIL — STATE OF CALIFORNIA

LICENSED ARCHITECT — WILLIAM JORGE AMADOR — C-20348 — JANUARY 31, 2027 — RENEWAL DATE — STATE OF CALIFORNIA

DSA V3 SUBMITTAL 03/21/2025

SHEET TITLE:

DETAILS

PROJECT NO.: 22-VCCCD-08	PROJECT ARCH: Designer
DRAWN: Author	CHECKED: Checker

SHEET NUMBER:

C5.1

DATE: | SHEET: 5 OF

G:\Projects\Civil\LA30354_Ventura College Civil Improvements_AMA\Design\Grading\Area 1\2024-11-27\AREAL_C-5.00_DETAIL.dwg Date:12/18/24 05:26p tnitou

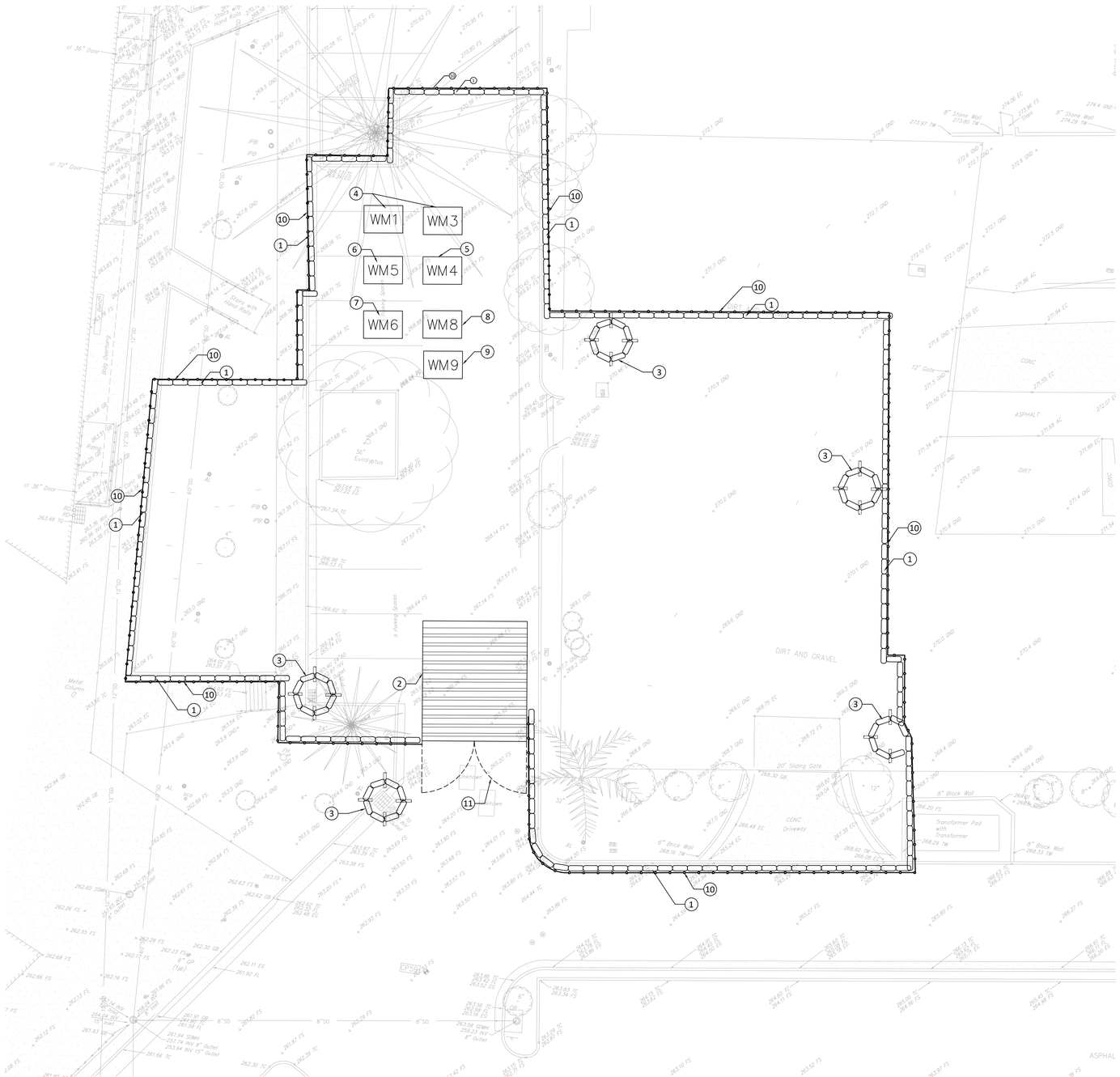

EROSION CONTROL NOTES:

ALL EROSION CONTROL PLANS SHALL BE IN ACCORDANCE WITH THE CONSTRUCTION SITE BEST MANAGEMENT PRACTICES (BMP'S) AND STANDARDS OUTLINED WITHIN THE LAUSD DESIGN MANUAL. NO GRADING PERMIT SHALL BE ISSUED WITHOUT AN EROSION CONTROL PLAN APPROVED BY LAUSD. THE EROSION CONTROL PLAN SHALL INCLUDE DETAILS OF PROTECTIVE MEASURES, INCLUDING DESILTING BASINS OR OTHER TEMPORARY DRAINAGE OR CONTROL MEASURES, OR BOTH, AS MAY BE NECESSARY TO PROTECT THE WATER QUALITY OF RECEIVING WATER BODIES OR TO PROTECT ADJOINING PUBLIC AND PRIVATE PROPERTY FROM DAMAGE FROM EROSION, FLOODING OR THE DEPOSITION OF MUD OR DEBRIS WHICH MAY ORIGINATE FROM THE SITE OR RESULT FROM SUCH GRADING OPERATIONS.

1. ALL EROSION CONTROL PLANS SHALL BE IN ACCORDANCE WITH THE CONSTRUCTION SITE BEST MANAGEMENT PRACTICES (BMP'S).
2. THE CONTRACTOR IS RESPONSIBLE FOR ANY DISCHARGES BY SUBCONTRACTORS.
3. ALL CONSTRUCTION CONTRACTORS AND SUBCONTRACTOR PERSONNEL ARE TO BE MADE AWARE OF THE REQUIRED BMPS AND GOOD HOUSEKEEPING MEASURES FOR THE PROJECT SITE AND ANY ASSOCIATED CONSTRUCTION STAGING AREAS.
4. IN CASE OF EMERGENCY, CALL _____ (RESPONSIBLE PERSON) AT _____ (24-HOUR PHONE NUMBER).
5. AREAS THAT ARE CLEARED AND GRADED SHALL BE LIMITED TO ONLY THE PORTION OF THE SITE THAT IS NECESSARY FOR CONSTRUCTION. THE CONSTRUCTION SITE SHALL BE MANAGED TO MINIMIZE THE EXPOSURE TIME OF DISTURBED SOIL AREAS THROUGH PHASING AND SCHEDULING OF GRADING AND THE USE OF TEMPORARY AND PERMANENT SOIL STABILIZATION.
6. ONCE DISTURBED, GRADED SLOPES EXCEEDING A 3:1 RATIO AND/OR TEN (10) FEET IN HEIGHT (TEMPORARY OR PERMANENT) SHALL BE STABILIZED IF THEY WILL NOT BE WORKED WITHIN 7 DAYS. DURING THE STORM SEASON, ALL SLOPES SHALL BE STABILIZED 24 HOURS PRIOR TO A PREDICTED STORM EVENT. CONSTRUCTION SITES SHALL BE RE-VEGETATED AS EARLY AS FEASIBLE AFTER SOIL DISTURBANCE AND WITHIN 7-DAYS OF COMPLETION.
7. DUST SHALL BE CONTROLLED BY WATERING OR OTHER METHODS APPROVED BY LAUSD.
8. PLACEMENT OF DEVICES TO REDUCE EROSION DAMAGE WITHIN THE DEVELOPMENT SHALL BE SHOWN ON THE APPROVED PLAN.
9. DISCHARGING OF CONTAMINATED SOILS VIA SURFACE EROSION IS PROHIBITED.
10. CONSTRUCTION ACCESS POINTS SHALL BE STABILIZED WITH A COMBINATION OF ROCK AND SHAKER PLATES YEAR-ROUND TO PREVENT TRACK-OUT. ROUTINE STREET SWEEPING SHALL BE PERFORMED ON ALL PAVED STREETS WHERE TRACKING IS OBSERVED. VACUUM SWEEPERS SHALL BE USED WHEN STREET SWEEPING BECOMES INEFFECTIVE.
11. CONSTRUCTION SITES SHALL BE MAINTAINED IN SUCH A CONDITION THAT AN ANTICIPATED STORM DOES NOT CARRY WASTES OR POLLUTANTS OFF THE SITE. DISCHARGES OF MATERIAL OTHER THAN STORM WATER (NON-STORM WATER) ARE PROHIBITED EXCEPT AS AUTHORIZED BY AN INDIVIDUAL NPDES PERMIT UNDER THE STATEWIDE GENERAL PERMIT - CONSTRUCTION ACTIVITY.
12. POTENTIAL POLLUTANTS INCLUDE BUT ARE NOT LIMITED TO: SOLID OR LIQUID CHEMICAL SPILLS; WASTES FROM PAINTS, STAINS, SEALANTS, SOLVENTS, DETERGENTS, GLUES, LIME, PESTICIDES, HERBICIDES, FERTILIZERS, WOOD PRESERVATIVES, AND ASBESTOS FIBERS, PAINT FLAKES OR STUCCO FRAGMENTS; FUELS, OILS LUBRICANTS, AND HYDRAULIC, RADIATOR OR BATTERY FLUIDS; CONCRETE AND RELATED CUTTING OR CURING RESIDUES; FLOATABLE WASTES; WASTES FROM ENGINE/EQUIPMENT STEAM CLEANING OR CHEMICAL DEGREASING; WASTES FROM STREET CLEANING; AND SUPER-CHLORINATED POTABLE WATER FROM LINE FLUSHING AND TESTING. DURING CONSTRUCTION, DISPOSAL OF SUCH MATERIALS SHOULD OCCUR IN A SPECIFIED AND CONTROLLED TEMPORARY AREA ON-SITE PHYSICALLY SEPARATED FROM POTENTIAL STORM WATER RUNOFF, WITH ULTIMATE DISPOSAL IN ACCORDANCE WITH LOCAL, STATE AND FEDERAL REQUIREMENTS.
13. RUNOFF FROM EQUIPMENT AND VEHICLE WASHING SHALL BE CONTAINED AT CONSTRUCTION SITE AND MUST NOT BE DISCHARGED TO RECEIVING WATERS OR THE LOCAL STORM DRAIN SYSTEM.
14. APPROPRIATE BMPS FOR CONSTRUCTION-RELATED MATERIALS, WASTES, SPILLS OR RESIDUES SHALL BE IMPLEMENTED TO ELIMINATE OR REDUCE TRANSPORT FROM THE SITE TO STREETS, DRAINAGE FACILITIES, OR ADJOINING PROPERTIES BY WIND OR RUNOFF.
15. MATERIAL STORAGE AND STAGING AREAS SHALL BE ESTABLISHED. FUEL TANK, PORTABLE TOILETS, LIQUIDS, GELS AND POWDERS SHALL HAVE SECONDARY CONTAINMENT AND BE STORED AWAY FROM ALL PRIVATE / PUBLIC STORM WATER CONVEYANCE SYSTEMS, SIDEWALKS, RIGHTS-OF-WAYS AND FLOW-LINES.
16. ALL PORTABLE MIXERS SHALL HAVE PLASTIC LINERS UNDERNEATH WITH GRAVEL BAGS PLACES ON THE DOWN-HILL SIDE OF THE LINERS TO CONTAIN DISCHARGES.
17. CONTROLLED STREET WASHING WILL ONLY BE ALLOWED PRIOR TO THE APPLICATION OF ASPHALT SEAL COATS AND ONLY WHEN ALL PERTINENT DRAINAGE INLETS ARE PROTECTED.
18. DISCHARGING CONTAMINATED GROUNDWATER PRODUCED BY DEWATERING GROUNDWATER THAT HAS INFILTRATED INTO THE CONSTRUCTION SITE IS PROHIBITED. DISCHARGING NON-CONTAMINATED GROUNDWATER PRODUCED BY DEWATERING ACTIVITIES MAY REQUIRE A NATIONAL POLLUTANT DISCHARGE ELIMINATION SYSTEM (NPDES) PERMIT FROM THE REGIONAL WATER QUALITY CONTROL BOARD.
19. STORM WATER RUNOFF SHALL NOT BE DIRECTED OVER ANY SLOPES WITHOUT PERMANENT DOWN DRAINS INSTALLED. EROSION AND SEDIMENT CONTROLS INCLUDING MAINTENANCE ARE REQUIRED ON ALL EXPOSED SLOPES UNTIL SUFFICIENT PERMANENT LANDSCAPING HAS BEEN ESTABLISHED. 100% SLOPE PROTECTION MUST BE IN PLACE PRIOR TO THE ISSUANCE OF THE FINAL CERTIFICATE OF OCCUPANCY.
20. VEGETATION CLEARING AND BRUSHING ACTIVITIES SHALL NOT BE INITIATED DURING THE WET SEASON ON ANY SITES WHICH ARE NOT ADEQUATELY PROTECTED WITH DESILTING BASINS OR OTHER TEMPORARY DRAINAGE OR CONTROL MEASURES.
21. STOCKPILES OF SOIL SHALL BE PROPERLY SECURED WITH BMP'S TO ELIMINATE OR REDUCE SEDIMENT TRANSPORT FROM THE SITE TO STREETS, DRAINAGE FACILITIES OR ADJACENT PROPERTIES VIA RUNOFF, VEHICLE TRACKING, OR WIND. STOCKPILES INACTIVE FOR A PERIOD OF 14 DAYS OR MORE SHALL BE COVERED; ACTIVE STOCKPILES SHALL BE COVERED PRIOR TO A FORECASTED RAIN.
22. AT THE END OF EACH DAY OF CONSTRUCTION ACTIVITY, ALL CONSTRUCTION DEBRIS AND WASTE MATERIALS SHALL BE COLLECTED AND PROPERLY DISPOSED OF IN TRASH OR RECYCLE BINS.

CONSTRUCTION NOTES:

1. CONSTRUCT SANDBAG BARRIER, BMP* SE-6 PER DETAIL A HEREON.
2. CONSTRUCT STABILIZED CONSTRUCTION ENTRANCE, BMP* TC-2 PER DETAIL B HEREON.
3. CONSTRUCT CATCH BASIN/AREA DRAIN SANDBAG BARRIER, BMP* SE-10 PER DETAIL D HEREON
4. INSTALL STOCKPILE MANAGEMENT & MATERIAL DELIVERY AND STORAGE PER CASQA WM-1 & WM-3. CONTRACTOR TO RELOCATE AS NECESSARY.
5. INSTALL SPILL PREVENTION AND CONTROL PER CASQA WM-4. CONTRACTOR TO RELOCATE AS NECESSARY.
6. INSTALL SOLID WASTE MANAGEMENT PER CASQA WM-5. CONTRACTOR TO COVER DUMPSTER WITH PLASTIC TARP PRIOR TO RAIN EVENTS. CONTRACTOR TO RELOCATE AS NECESSARY.
7. INSTALL HAZARDOUS WASTE MANAGEMENT PER CASQA WM-6. CONTRACTOR TO RELOCATE AS NECESSARY.
8. INSTALL CONCRETE WASTE MANAGEMENT PER CASQA WM-8. CONTRACTOR TO RELOCATE AS NECESSARY.
9. INSTALL SANITARY/SEPTIC WASTE MANAGEMENT PER CASQA WM-9. CONTRACTOR TO RELOCATE AS NECESSARY.
10. INSTALL 8' CHAIN LINK FENCE WITH GREEN SCREEN FABRIC.
11. ENTRANCE GATE.
12. CONSTRUCT INLET CULVERT SAND BAGS PER DETAIL C HEREON

10' 5' 0' 5' 10' 20'
GRAPHIC SCALE
SCALE : 1"= 10'

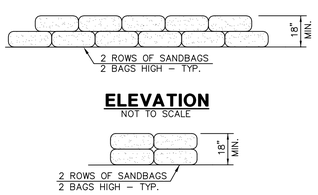

A SANDBAGGING DETAIL
NOT TO SCALE

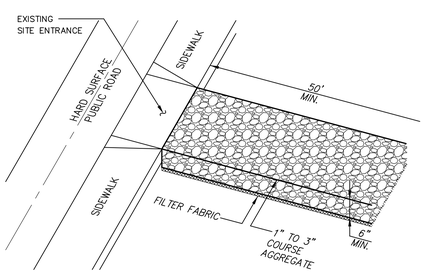

B STABILIZED CONSTRUCTION ENTRANCE
NOT TO SCALE

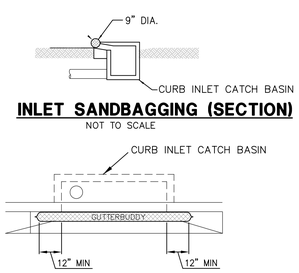

C INLET CATCH BASIN DETAIL
NOT TO SCALE

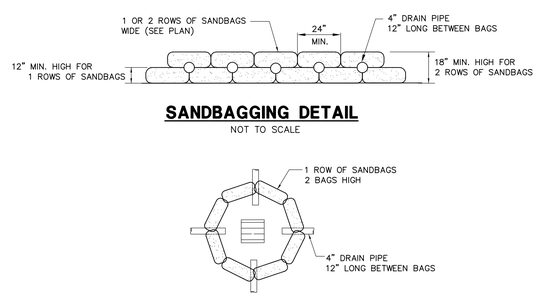

D CATCH BASIN/AREA DRAIN SANDBAGGING DETAIL
NOT TO SCALE

DIVISION OF THE STATE ARCHITECT

IDENTIFICATION STAMP
DIV. OF THE STATE ARCHITECT
APP: 03-124589 INC:
REVIEWED FOR
SS ☑ FLS ☑ ACS ☑
DATE: 04/15/2025

VENTURA COUNTY COMMUNITY COLLEGE DISTRICT
761 EAST DAILY DRIVE
CAMARILLO, CALIFORNIA 93010
TEL: (805) 652-5500

PROJECT TITLE AND SCHOOL LOCATION

VENTURA COMMUNITY COLLEGE STEM MODULAR BUILDING
VENTURA COMMUNITY COLLEGE
4667 TELEGRAPH RD.
VENTURA, CA 93003

COMMISSIONED ARCHITECT

AMADOR
amador wittlie architects, inc.
28328 AGOURA RD, 203 | AGOURA HILLS CA, 91301 | 805-558-4334

CONSULTANT

MOLLENHAUER GROUP
CIVIL ENGINEERING
SURVEYING+MAPPING
LAND DEVELOPMENT
213 624 2661 TEL
919 W. GLENOAKS BLVD., 2nd FLOOR
GLENDALE, CA 91202

STAMPS/SEALS

REGISTERED PROFESSIONAL ENGINEER THOMAS M. TRAN No. 82464 CIVIL STATE OF CALIFORNIA

LICENSED ARCHITECT WILLIAM JORGE AMADOR C-20348 JANUARY 31, 2027 RENEWAL DATE STATE OF CALIFORNIA

DSA V3 SUBMITTAL 03/21/2025

SHEET TITLE:

EROSION CONTROL PLAN

PROJECT NO.: 22-VCCCD-08	PROJECT ARCH: Designer
DRAWN: Author	CHECKED: Checker
SHEET NUMBER: C6.0	
DATE:	SHEET: 5 OF ___

G:\Projects\Civil\A30354_Ventura College Civil Improvements_AMA\Design\Grading\Area 1\2024-11-22\AREA1_C-6.00_EROSION.dwg Date:12/18/24 05:24p trilou

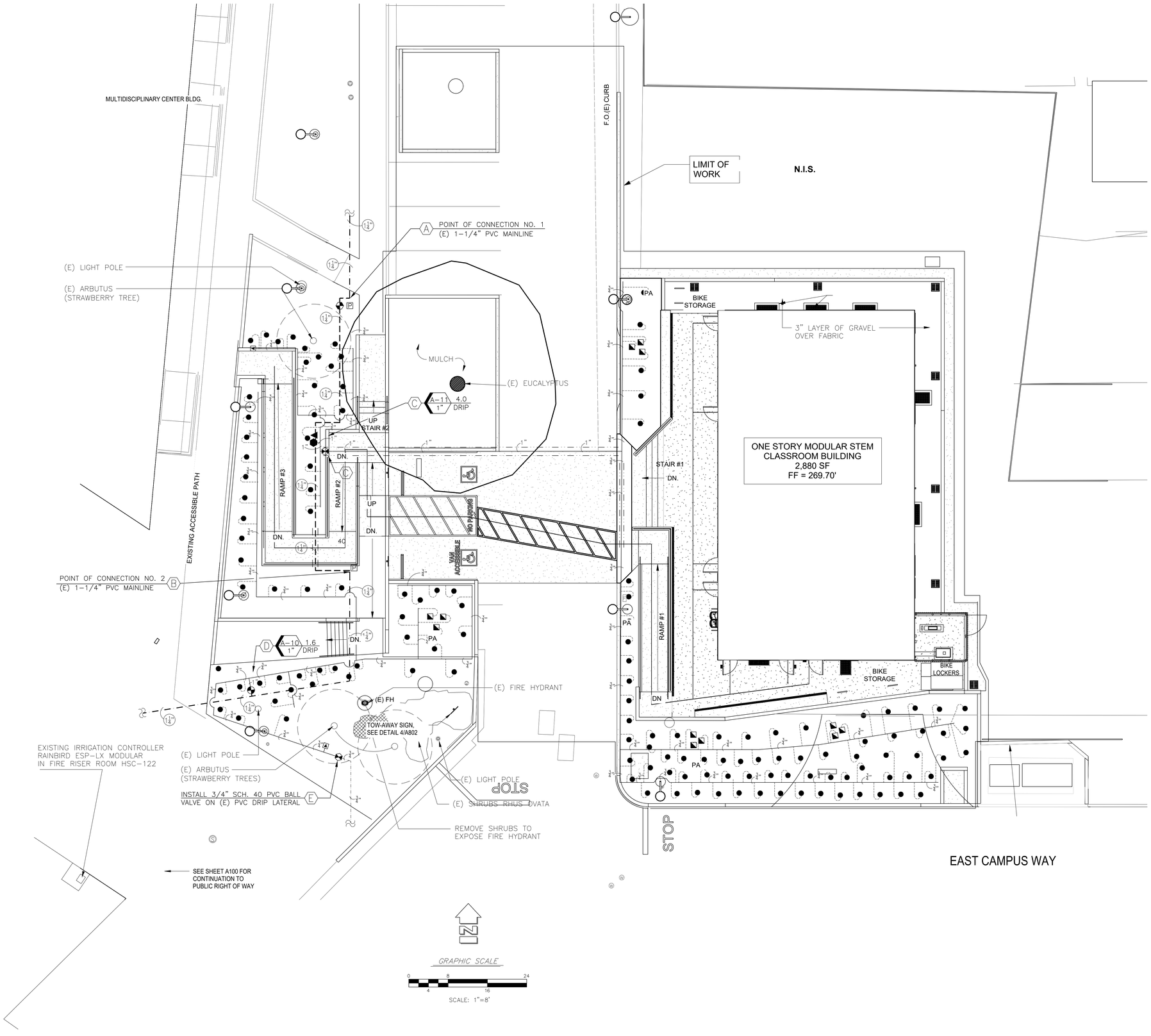

DIVISION OF THE STATE ARCHITECT

IDENTIFICATION STAMP
DIV. OF THE STATE ARCHITECT
APP: 03-124589 INC:
REVIEWED FOR
SS ☑ FLS ☑ ACS ☑
DATE: 04/15/2025

VENTURA COUNTY COMMUNITY COLLEGE DISTRICT

761 EAST DAILY DRIVE
CAMARILLO, CALIFORNIA 93010
TEL: (805) 652-5500

PROJECT TITLE AND SCHOOL LOCATION

VENTURA COMMUNITY COLLEGE STEM MODULAR BUILDING

VENTURA COMMUNITY COLLEGE
4667 TELEGRAPH RD.
VENTURA, CA 93003

COMMISSIONED ARCHITECT

AMADOR

amador whittle architects, inc
28328 AGOURA RD, 203 | AGOURA HILLS CA, 91301 | 805-558-4334

CONSULTANT

JORDAN & BAIN
LANDSCAPE ARCHITECTS, INC.

459 NORTH VENTURA AVE., VENTURA CA 93001
(805) 642-3641 FAX (805) 653-7874

STAMPS/SEALS

REGISTERED LANDSCAPE ARCHITECT
PAUL J. JORDAN
SIGNATURE
02/2026
RENEWAL DATE
09/01/24
DATE
STATE OF CALIFORNIA

LICENSED ARCHITECT
WILLIAM JORGE AMADOR
C-20348
JANUARY 31, 2027
RENEWAL DATE
STATE OF CALIFORNIA

△ DSA V3 SUBMITTAL 03/21/2025

SHEET TITLE:

IRRIGATION PLAN

PROJECT NO.: 22-VCCCD-08	PROJECT ARCH: Designer
DRAWN: pj, jb	CHECKED: Checker

SHEET NUMBER:

L1.1

DATE: 12/19/24 SHEET: ___ OF ___

IRRIGATION NOTES

1. PRIOR TO BEGINNING ANY WORK, THE CONTRACTOR AND THE VENTURA COLLEGE FACILITIES REPRESENTATIVE SHALL PARTICIPATE IN A THOROUGH IRRIGATION SYSTEM REVIEW OF THE PROJECT SITE. ALL EXISTING REMOTE CONTROL VALVES LOCATED WITHIN THE SCOPE OF WORK SHALL BE TURNED ON AND OBSERVED IN OPERATION BY BOTH THE CONTRACTOR AND THE VENTURA COLLEGE REPRESENTATIVE. ANY EXISTING DEFECTS WILL BE LISTED IN DETAIL IDENTIFYING THE SPECIFIC VALVE STATION NUMBER AND DESCRIBING THE EXACT BROKEN OR NON FUNCTIONING IRRIGATION COMPONENT NOTED DURING THE SITE REVIEW. AT THE CONCLUSION OF THE IRRIGATION REVIEW, THE CONTRACTOR SHALL GENERATE A SUMMARY OF THE ITEMS IDENTIFIED BY BOTH PARTIES LISTING ALL REMOTE CONTROL VALVES OPERATED, IDENTIFYING IF THE VALVE PERFORMED WITHOUT ANY DEFECTS OR SPECIFICALLY IDENTIFYING ANY OBSERVED DEFECTS OR NON FUNCTIONING COMPONENTS, SUCH AS BROKEN HEADS, CLOGGED NOZZLES, CLOGGED DRIP EMITTERS, NON OPERATING VALVE SOLENOID, BROKEN PIPING, OR OTHER NOTED DEFECT. THE COMPLETED SUMMARY OF ITEMS NOTED SHALL BE LISTED ON A DOCUMENT CALLED 'EXISTING IRRIGATION SYSTEM OBSERVATIONS'. THIS DOCUMENT SHALL BE SIGNED BY THE CONTRACTOR AND SUBMITTED TO THE VENTURA COLLEGE REPRESENTATIVE FOR A CONFIRMING SIGNATURE. THE MUTUALLY SIGNED 'EXISTING IRRIGATION SYSTEM OBSERVATIONS DOCUMENT' SHALL BE SENT TO THE ATTENTION OF THE LANDSCAPE ARCHITECT FOR INSPECTION PURPOSES AT THE CONCLUSION OF THE CONSTRUCTION WORK. IF REQUESTED BY THE VENTURA COLLEGE REPRESENTATIVE, THE CONTRACTOR SHALL PROVIDE A LIST OF THE EXISTING DEFECTIVE IRRIGATION COMPONENTS NOTED WITH A DETAILED WRITTEN PROPOSAL TO REPAIR EACH ITEM IDENTIFIED ON THE LIST. A COPY OF THIS PROPOSAL WILL BE SENT TO THE LANDSCAPE ARCHITECT. THIS ADDITIONAL WORK PROPOSAL MUST BE REVIEWED AND APPROVED IN WRITING BY THE VENTURA COLLEGE STAFF AND FORMALLY PRESENTED TO THE GENERAL CONTRACTOR BEFORE THE LANDSCAPE SUB-CONTRACTOR CAN BEGIN ANY ADDITIONAL REPAIR WORK. THE MUTUALLY SIGNED 'EXISTING IRRIGATION SYSTEM OBSERVATION DOCUMENT' SHALL BE USED AS A GUIDE TO IDENTIFY ANY COLLATERAL DAMAGE CAUSED TO THE EXISTING IRRIGATION SYSTEM AS A RESULT OF NEW CONSTRUCTION PERFORMED ON SITE BY THE CONTRACTORS. ANY DAMAGE CAUSED TO THE EXISTING IRRIGATION SYSTEM NOT SPECIFICALLY IDENTIFIED ON THE 'EXISTING IRRIGATION SYSTEM OBSERVATION DOCUMENT' SHALL BE REPAIRED OR REPLACED AT THE CONTRACTOR'S EXPENSE. IN THE EVENT THAT THE CONTRACTOR DOES NOT PARTICIPATE OR PERFORM THE EXISTING IRRIGATION SITE REVIEW, ANY EXISTING IRRIGATION EQUIPMENT OR COMPONENTS DAMAGED ON THE PROJECT SITE NOTED BY THE LANDSCAPE ARCHITECT DURING THE FINAL IRRIGATION SYSTEM REVIEW SHALL BE REPAIRED OR REPLACED BY THE CONTRACTOR AT THEIR EXPENSE AND TO THE SATISFACTION OF THE VENTURA COLLEGE REPRESENTATIVE.
2. FIELD VERIFY EXISTING STATIC WATER PRESSURE AND NOTIFY THE LANDSCAPE ARCHITECT PRIOR TO BEGINNING ANY WORK.
3. CONTACT DIG ALERT AT 1-800-227-2600 TO IDENTIFY AND LOCATE ALL ON-SITE UTILITIES PRIOR TO BEGINNING WORK. THE CONTRACTOR SHALL COORDINATE WITH THE VENTURA COLLEGE REPRESENTATIVE AND REVIEW THE EXISTING SITE PRIOR TO BEGINNING WORK TO AVOID CONFLICTS WITH FUTURE CONSTRUCTION PROJECTS SCHEDULED ON SITE.
4. PROTECT IN PLACE AND KEEP IN WORKING CONDITION ALL EXISTING IRRIGATION SYSTEMS NOT A PART OF THIS WORK. THE CONTRACTOR SHALL REPAIR OR REPLACE ANY EXISTING MAINLINE SEGMENT, LATERAL, IRRIGATION CONTROL WIRE, HYDRAULIC TUBING, REMOTE CONTROL VALVE, VALVE BOX, QUICK COUPLER, OR ANY OTHER IRRIGATION SYSTEM COMPONENT DAMAGED DURING THE RENOVATION PROCESS. ADJACENT FUNCTIONING IRRIGATION SYSTEM COMPONENTS MUST BE KEPT IN WORKING CONDITION TO MAINTAIN THE HEALTH AND VIGOR OF THE EXISTING TURF AND LANDSCAPE PLANTINGS. PROLONGED LACK OF WATER TO THESE PLANTERS AS A RESULT OF NEW CONSTRUCTION WORK THAT RESULTS IN THE LOSS OF TURF OR PLANTS SHALL BE REPLACED BY THE CONTRACTOR AT THEIR EXPENSE AND TO THE SATISFACTION OF THE VENTURA COLLEGE REPRESENTATIVE.
5. THE CONTRACTOR SHALL BE RESPONSIBLE FOR ANY TRENCH SETTLING OR IRRIGATION HEAD SETTLING. ALL TRENCHES WILL BE BACK FILLED WITH CLEAN SOIL, COMPACTED AND PLANTED WITH APPROVED SEED OR PLANT MATERIAL AS PER PLAN. ALL HEADS THAT SETTLE WILL BE RAISED TO 1/2" ABOVE FINISH GRADE OR AS DIRECTED BY EITHER THE LANDSCAPE ARCHITECT OR VENTURA COLLEGE REPRESENTATIVE. PROVIDE ADDITIONAL SOIL AS NECESSARY AND HAND TAMP AROUND HEAD TO PREVENT FUTURE SETTLING.
6. SLEEVE ALL PVC IRRIGATION PIPES AND WIRES INSTALLED UNDER PAVING. WIRES SHALL BE ENCLOSED IN SCH. 40 PVC ELECTRICAL CONDUIT SIZED BY THE CONTRACTOR, NO LESS THAN 2" IN SIZE. MAINLINE SLEEVES SHALL BE SIZED AS PER LEGEND ON PLAN. SEE SPECIFICATIONS AND IRRIGATION SLEEVING SCHEDULE FOR ADDITIONAL INFORMATION.
7. THE IRRIGATION SYSTEM IS SHOWN DIAGRAMMATICALLY. INSTALL ALL IRRIGATION EQUIPMENT WITHIN LANDSCAPE PLANTERS WHENEVER POSSIBLE.
8. ALL SPRINKLER HEADS SPECIFIED ON THIS PROJECT ARE EQUIPPED WITH FACTORY INSTALLED CHECK VALVES IN THE SPRINKLER BODY. IN THE EVENT THAT LOW HEAD DRAINAGE STILL OCCURS, THE CONTRACTOR SHALL INSTALL INLINE SWING CHECK OR SPRING LOADED CHECK VALVES ON THE PVC LATERALS TO PREVENT LOW HEAD DRAINAGE. ANY INLINE CHECK VALVE INSTALLED ON PVC LATERALS MUST BE FURNISHED WITH A 10" ROUND PLASTIC VALVE BOX WITH A LOCKING GREEN PLASTIC LID.
9. ALL VALVE BOXES INSTALLED IN CONCRETE OR ASPHALT PAVING SHALL BE TRAFFIC RATED CONCRETE BOXES (13-1/4"W X 24-1/4"L X 12"D) WITH CONCRETE LIDS. BOXES SHALL BE MANUFACTURED BY OLDCASTLE PRE-CAST, BOX MODEL N30BOX, LID MODEL B30D, CONCRETE BOX EXTENSION MODEL B30X12, OR CHRISTY CONCRETE BOX EQUIVALENT. ALL RECTANGULAR PLASTIC VALVE BOXES SHALL HAVE THE MINIMUM DIMENSIONS OF (14-1/2"W X 19-1/2"L X 12-1/4"H) AND SHALL HAVE GREEN LOCKING PLASTIC LIDS. THE CONTRACTOR SHALL INCLUDE WITH THE COST OF THE PROJECT ANY PLASTIC VALVE BOX EXTENSION THAT MIGHT BE REQUIRED TO COMPLETE THE VALVE INSTALLATION AS PART OF THE BASE BID. PLASTIC BOX MANUFACTURER'S AND MODEL NUMBERS SHALL BE CARSON MODEL 1419-12 WITH 1419-4B 'T-STYLE GREEN LID', APPLIED ENGINEERING PRODUCTS MODEL 1015T-1G2G, OR NDS MANUFACTURING APPROVED EQUAL.
10. USE ONLY SCH. 80 PVC NIPPLES WHEN INSTALLING VALVES REQUIRING THREADED FITTINGS ON IRRIGATION MAINLINES. SCH. 40 PVC MALE ADAPTERS SHALL NOT BE USED ON ANY VALVE ASSEMBLY CONNECTED TO A PRESSURIZED MAINLINE.
11. MAKE ALL REQUIRED ADJUSTMENTS TO BOTH EXISTING AND NEW SPRINKLER HEADS OR DRIP EMITTERS TO PREVENT ANY IRRIGATION WATER FROM OVER SPRAYING OR FLOODING ONTO ADJACENT PAVEMENT OR CLASSROOM BUILDINGS. MAKE ANY NOZZLE REPLACEMENTS AS REQUESTED BY EITHER THE LANDSCAPE ARCHITECT OR THE VENTURA COLLEGE REPRESENTATIVE TO IMPROVE IRRIGATION COVERAGE OR TO BALANCE PRECIPITATION RATE TO LANDSCAPE PLANTER AS PART OF BASE BID.
12. HEAT STAMP OR 'BRAND' INTO THE PLASTIC REMOTE CONTROL VALVE BOX LIDS THE NEW VALVE STATION NUMBER AND RELATED NEW AUTO CONTROLLER LETTER. PROVIDE CHRISTY STANDARD SIZE I.D. TAGS CONNECTED TO ALL NEW REMOTE CONTROL VALVE SOLENOIDS WITH STATION NUMBER AND RELATED EXISTING AUTO CONTROLLER IDENTIFICATION LETTER.
13. ALL WATER TIGHT CONNECTORS USED TO SPLICE 14-GAUGE WIRES TO REMOTE CONTROL VALVE SOLENOIDS OR TO REPAIR BROKEN EXISTING REMOTE CONTROL VALVE WIRES ON THIS PROJECT SHALL BE MANUFACTURED BY 3M COMPANY, MODEL DBR-Y6 SERIES, SPEARS MODEL DS-400 WITH SPEARS DS-300 SEALANT, OR VENTURA COLLEGE APPROVED EQUAL.
14. INSTALL ALL IRRIGATION REMOTE CONTROL VALVES, BALL VALVES, AND QUICK COUPLING VALVES A MINIMUM DISTANCE OF 10'-0" FROM ALL TREE TRUNK LOCATIONS ILLUSTRATED ON PLANTING PLAN. CONFIRM LAYOUT OF EXISTING OR NEW TREE LOCATIONS PRIOR TO INSTALLING ANY VALVE.
15. EXISTING IMPROVEMENTS WITHIN THE WORK AREAS SHALL REMAIN AND BE PROTECTED IN PLACE UNLESS OTHERWISE NOTED. DAMAGE TO EXISTING IMPROVEMENTS SHALL BE REPLACED IN KIND TO A CONDITION EQUAL TO OR BETTER THAN THAT WHICH EXISTED PRIOR TO CONSTRUCTION.
16. UTILITIES MAY HAVE BEEN OMITTED ON THE IRRIGATION SHEETS. REVIEW ALL AVAILABLE VENTURA COLLEGE 'AS-BUILT' RECORD DRAWINGS AND EXERCISE CARE IN EXCAVATION WHILE PROTECTING EXISTING UTILITIES IN PLACE.
17. PRESSURE REGULATING REMOTE CONTROL VALVES SHALL BE ADJUSTED BY CONTRACTOR USING MANUFACTURER'S SPECIFICATIONS TO OPERATE SPRINKLER HEADS AT PRESSURE INDICATED ON IRRIGATION LEGEND.

MAXIMUM APPLIED WATER ALLOWANCE CALCULATIONS

MAWA = (ETo x 0.45 x Land. Area x 0.62)
ETo = reference evapotranspiration of Ventura of 43.5 (inches per year)
0.65 = evapotranspiration adjustment factor (standard number)
Land. Area. = total square feet of landscape area for the site
0.62 = conversion factor (to gallons per square foot)

PROJECT SITE - MAWA = (43.5 x 0.65 x 2,710 x 0.62) = 47,508 G.P.Y.

ESTIMATED APPLIED WATER USE FORMULA

$$EAWU = (ETo) \times (.62) \frac{(PF \times Land.\ Area)}{IE}$$

ETo = reference evapotranspiration of Ventura of 43.5 "/yr.
0.62 = conversion factor (to gallons per square foot)
PF = plant factor from WUCOLS
LA = landscaped area covered by sprinkler valve (sq. ft.)
IE = irrigation efficiency (0.81 drip irrigation)

Shrub Drip System - Low Water Use

$$EAWU = (43.5) \times (.62) \frac{(.3 \times 2,710)}{.81} = 27,070 \text{ gallons per year}$$

Total estimated applied water use for this site = 27,070 gallons per year

SEASONAL MAINTENANCE SCHEDULE

1. CLEAN AND FLUSH ALL DRIP FILTERS ONCE (1) EVERY (4) MONTHS.
2. FLUSH PVC DRIP LATERAL PIPING A MINIMUM OF TWICE A YEAR.
3. ROTATE ALL BALL VALVE HANDLES A MINIMUM OF (3) TIMES PER YEAR.

WATER USE SUMMARY FOR PROJECT SITE

Maximum Allowable Water Allocation (MAWA) for this site = 47,508 Gallons Per Year
Total Estimated Applied Water Use (EAWU) for this site = 27,070 Gallons Per Year

This project is below the Maximum Allowable Water Allocation by 20,438 G.P.Y.

MWELO COMPLIANCE STATEMENT

"I HAVE COMPLIED WITH THE CRITERIA OF THE ORDINANCE AND APPLIED THEM FOR THE EFFICIENT USE OF WATER IN THE LANDSCAPE DESIGN PLAN." STATEMENT SHALL BE SIGNED AND DATED BY THE PROJECT LANDSCAPE ARCHITECT.

LANDSCAPE ARCHITECT	LICENSE NUMBER	DATE
	1443	9-13-23

IRRIGATION SLEEVING SCHEDULE

ALL SLEEVES TO BE INSTALLED 24" BELOW GRADE

MAINLINE OR / LATERAL PIPE SIZE	SLEEVE SIZE REQUIRED
3/4" SCH. 40 PVC / SCH. 40 PVC	2" SCH. 40 PVC
1" SCH. 40 PVC / SCH. 40 PVC	2" SCH. 40 PVC
1-1/4" SCH. 40 PVC / SCH. 40 PVC	2-1/2" SCH. 40 PVC
1-1/2" SCH. 40 PVC / SCH. 40 PVC	3" CLASS 200 PVC
2" CLASS 315 / SCH. 40 PVC	4" CLASS 200 PVC
2-1/2" CLASS 315 / SCH. 40 PVC	4" CLASS 200 PVC
3" CLASS 315 / SCH. 40 PVC	6" CLASS 200 PVC
4" CLASS 315 / SCH. 40 PVC	6" CLASS 200 PVC

IRRIGATION LEGEND

SYMBOL	DESCRIPTION	MANUFACTURER	MODEL / REMARKS	PSI	RAD	GPM 360°	DETAIL
	EXISTING IRRIGATION MAINLINE	UNKNOWN	SCH. 40 PVC - SOLVENT WELD - 24" BELOW GRADE				N.A.
	EXISTING IRRIGATION LATERAL	UNKNOWN	SCH. 40 PVC - SOLVENT WELD - 12" BELOW GRADE				N.A.
	SLEEVING	PACIFIC PLASTICS	CLASS 200 PVC / SCH. 40 PVC - SOLVENT WELD - 24" BELOW GRADE - SEE KEY				5 / L3.1
	NEW MAINLINE	PACIFIC PLASTICS	SCH. 40 PVC - SOLVENT WELD - 24" BELOW GRADE				5 / L3.1
	BURIED PVC LATERAL	PACIFIC PLASTICS	SCH. 40 PVC - 12" BELOW GRADE				5 / L3.1
	PVC FLEXIBLE HOSE	GPH IRRIGATION	MODEL GPVCSSAR050IRR - ORANGE STRIPE SERIES - 3/8" SIZE - ALGAE RESISTANT				10 / L3.1
	(E) REMOTE CONTROL VALVE	RAIN BIRD	XCZ-100-B-COM SERIES - 1" SIZE - DRIP R.C.V. ASSEMBLY IN A VALVE BOX				N.A.
	SCH. 80 PVC BALL VALVE	SPEARS	TRU-UNION SERIES - LINE SIZE - SCH. 80 PVC - IN A RECTANGULAR VALVE BOX WITH LOCKING GREEN LID				6 / L3.1
	DRIP REMOTE CONTROL VALVE ASSEMBLY W/ FILTERS	RAIN BIRD	XCZ-100-PRB-COM - 1" SIZE - 1" PESB VALVE, (1) RAIN BIRD 1" PRESSURE REGULATING BASKET FILTER, MODEL PRB-QKCHK-100, AND 1" THREADED SCH. 40 PVC BALL IN A JUMBO VALVE BOX W/ LOCKING GREEN LID				7 / L3.1
	QUICK COUPLER	RAIN BIRD	33 DRC (3/4") - INSTALLED IN A 10" ROUND VALVE BOX - WITH GREEN LID				8 / L3.1
	WIRE SPLICE BOX	CARSON / EQ.	1419-12 RECTANGULAR VALVE BOX WITH LOCKING GREEN LID				9 / L3.1
	DRIP SYSTEM FLUSH VALVE	SPEARS / EQUAL	3/4" SCH. 40 PVC ECONOMY BALL VALVE, IN RECTANGULAR VALVE BOX WITH 3'-0" LOOP OF FLEXIBLE PVC HOSE				11 / L3.1
	LATERAL ISOLATION VALVE	SPEARS / EQUAL	3/4" SCH. 40 PVC ECONOMY BALL VALVE IN RECTANGULAR VALVE BOX				12 / L3.1
	SHRUB IRRIGATION HIGH FLOW DRIP BUBBLER (2 GALLONS PER HOUR) (.034 GALLONS PER MIN.)	TORO EMITTER WITH GPH IRRIGATION PRODUCTS PVC FLEXIBLE HOSE	TORO MODEL T-DPJ08-F50 / 1/2" FPT PRESSURE COMPENSATING EMITTER WITH SCREEN CHECK VALVE. INSTALL (1) EMITTER PER EACH SHRUB ON 1/2" IRRIGATION SIZE (3/8" IPS) FLEXIBLE PVC HOSE, G.P.H. MODEL GPVCSSAR050IRR (BLACK IN COLOR) WITH (2) SOLVENT WELD G.P.H. MODEL G436073B BLACK MALE ADAPTERS. CUT LENGTH OF FLEXIBLE PVC TUBING STARTING FROM RIGID PVC LATERAL SUPPLY TO LENGTH NEEDED TO INSTALL EMITTER WITHIN PLANT BASIN IN THE FIELD. USE I.P.S. PIPE PRIMER MODEL 'P-70' AND I.P.S. SOLVENT CEMENT MODEL '795' FOR ALL FLEXIBLE PVC TUBING WELDS TO BLACK COLORED G.P.H. MALE ADAPTERS.	30	1'	.034	10 / L3.1
	TREE IRRIGATION HIGH FLOW DRIP BUBBLER (4 GALLONS PER HOUR) (.067 GALLONS PER MIN.)	TORO EMITTER WITH GPH IRRIGATION PRODUCTS PVC FLEXIBLE HOSE	TORO MODEL DB-04-PC / 1/2" FPT PRESSURE COMPENSATING EMITTER WITH SCREEN CHECK VALVE. INSTALL (3) EMITTERS PER EACH TREE ON 1/2" IRRIGATION SIZE (3/8" IPS) FLEXIBLE PVC HOSE, G.P.H. MODEL GPVCSSAR050IRR (BLACK IN COLOR) WITH (2) SOLVENT WELD G.P.H. MODEL G436073B BLACK MALE ADAPTERS. CUT LENGTH OF FLEXIBLE PVC TUBING STARTING FROM RIGID PVC LATERAL SUPPLY TO LENGTH NEEDED TO INSTALL EMITTER WITHIN PLANT BASIN IN THE FIELD. USE I.P.S. PIPE PRIMER MODEL 'P-70' AND I.P.S. SOLVENT CEMENT MODEL '795' FOR ALL FLEXIBLE PVC TUBING WELDS TO BLACK COLORED G.P.H. MALE ADAPTERS.	30	1'	.067	10 / L3.1

IRRIGATION AUTO CONTROLLER ASSEMBLY SCHEDULE

SYMBOL	DESCRIPTION
A	IRRIGATION POINT OF CONNECTION NO. 1: EXCAVATE AND EXPOSE THE (E) 1-1/4" SCH. 40 PVC IRRIGATION MAINLINE WHICH IS BURIED APPROXIMATELY 18"-24" BELOW GRADE AT THE APPROXIMATE LOCATION SHOWN ON THE IRRIGATION PLAN. FIELD VERIFY THE EXACT LOCATION OF THE (E) MAINLINE WITHIN THE PLANTING AREA IN THE FIELD. PROTECT (E) 14-GAUGE DIRECT BURIED IRRIGATION VALVE WIRES TIED ON BOTTOM OF THE MAINLINE IN PLACE. CUT THE 1-1/4" SCH. 40 PVC MAINLINE AND IRRIGATION WIRES AT THIS LOCATION. TRENCH AND INSTALL NEW 1-1/4" SCH. 40 PVC MAINLINE PIPING WITH SCH. 80 PVC SOLVENT WELD FITTINGS THE REDIRECT THE MAINLINE INTO NEW PLANTING AREAS. INSTALL NEW REPLACEMENT DRIP REMOTE CONTROL VALVE ASSEMBLY 'A-11' IN A JUMBO VALVE BOX AT LOCATION AS PER IRRIGATION PLAN WITH A NEW $\frac{3}{4}$" QUICK COUPLER IN A SEPARATE VALVE BOX. TRENCH AND INSTALL NEW 1-1/4" SCH. 40 PVC MAINLINE WITH SCH. 80 PVC SOLVENT WELD FITTINGS TO IRRIGATION POINT OF CONNECTION NO. 2 LOCATION AND CONNECT. CUT A TOTAL OF (3) EXISTING 14-GAUGE IRRIGATION WIRES, (1) CONTROL WIRE FOR (E) REMOTE CONTROL VALVE 'A-10', (1) CONTROL WIRE FOR (E) REMOTE CONTROL VALVE 'A-11', AND (1) EXISTING WHITE COMMON WIRE. INSTALL A RECTANGULAR VALVE BOX OVER CUT WIRE LOCATION TO USE AS A SPLICE BOX. HEAT STAMP OF BRAND THE TOP OF THE VALVE BOX WITH $\frac{3}{4}$" SIZED LETTERS 'SB'. USE 3M MODEL DBR-Y6 WATER PROOF WIRE SPLICE CONNECTORS AND INSTALL NEW 14-GAUGE REPLACEMENT WIRE SEGMENTS STARTING FROM THIS LOCATION. INSTALL (1) CONTROL NEW WIRE SEGMENT WITH NEW WHITE COMMON WIRE SEGMENT AND CONNECT TO NEW REPLACEMENT DRIP REMOTE CONTROL VALVE ASSEMBLY 'A-11'. CONTINUE REMAINING WHITE COMMON WIRE AND (1) REPLACEMENT CONTROL WIRE WITH NEW MAINLINE FOR (E) REMOTE CONTROL VALVE 'A-10'. CONNECT WIRES AT IRRIGATION POINT OF CONNECTION NO. 2 SPLICE BOX LOCATION. SEE KEY NOTE 'B' - IRRIGATION POINT OF CONNECTION NO. 2 FOR ADDITIONAL INFORMATION.
B	IRRIGATION POINT OF CONNECTION NO. 2: EXCAVATE AND EXPOSE THE (E) 1-1/4" SCH. 40 PVC IRRIGATION MAINLINE WHICH IS BURIED APPROXIMATELY 18"-24" BELOW GRADE AT THE APPROXIMATE LOCATION SHOWN ON THE IRRIGATION PLAN. FIELD VERIFY THE EXACT LOCATION OF THE (E) MAINLINE WITHIN THE PLANTING AREA IN THE FIELD. PROTECT (E) 14-GAUGE DIRECT BURIED IRRIGATION VALVE WIRES TIED ON BOTTOM OF THE MAINLINE IN PLACE. CUT THE 1-1/4" SCH. 40 PVC MAINLINE AND IRRIGATION WIRES AT THIS LOCATION. CONNECT NEW 1-1/4" SCH. 40 PVC MAINLINE ORIGINATING FROM IRRIGATION POINT OF CONNECTION '1" TO (E) 1-1/4" SCH. 40 PVC MAINLINE AT THIS LOCATION USING SCH. 80 PVC SOLVENT WELD FITTINGS. CUT A TOTAL OF (2) EXISTING 14-GAUGE IRRIGATION WIRES, (1) CONTROL WIRE FOR (E) REMOTE CONTROL VALVE 'A-11', AND (1) EXISTING WHITE COMMON WIRE. INSTALL A RECTANGULAR VALVE BOX OVER CUT WIRE LOCATION TO USE AS A SPLICE BOX. HEAT STAMP OF BRAND THE TOP OF THE VALVE BOX WITH $\frac{3}{4}$" SIZED LETTERS 'SB'. USE 3M MODEL DBR-Y6 WATER PROOF WIRE SPLICE CONNECTORS AND INSTALL NEW 14-GAUGE REPLACEMENT WIRE SEGMENTS STARTING FROM THIS LOCATION. CONNECT (1) 14-GAUGE CONTROL WIRE AND (1) 14-GAUGE COMMON WIRE PULLED FROM IRRIGATION POINT OF CONNECTION '1' AND SPLICE ONTO (E) CUT WIRE WIRES USING 3M MODEL DBR-Y6 WIRE CONNECTORS TO REACTIVATE (E) REMOTE CONTROL VALVE 'A-10'.
C	INSTALL NEW IRRIGATION REMOTE CONTROL VALVE 'A-11' ON NEW 1-1/4" PVC IRRIGATION MAINLINE FOR NEW DRIP IRRIGATION SYSTEM: INSTALL A NEW 1" DRIP REMOTE CONTROL VALVE ASSEMBLY, VALVE 'A-11', ON NEW 1-1/4" IRRIGATION MAINLINE. THIS NEW REMOTE CONTROL VALVE WILL REPLACE THE (E) 1" DRIP REMOTE CONTROL VALVE 'A-11' THAT WILL BE DESTROYED AS A RESULT OF THE NEW CONSTRUCTION WORK. TRENCH AND INSTALL NEW SCH. 40 PVC LATERALS WITH NEW HIGH FLOW DRIP EMITTERS TO ALL NEW SHRUBS AND TREES AS PER IRRIGATION PLAN. INSTALL A 1" SCH. 40 PVC BALL VALVE IN A VALVE BOX ON WEST SIDE OF PARKING LOT ONTO NEW 1" SCH. 40 PVC LATERAL LINE THAT SUPPLIES WATER TO THE NEW DRIP IRRIGATION SYSTEM ON THE EAST SIDE OF THE PARKING LOT FOR MAINTENANCE PURPOSES.
D	REMOVE (E) 1" REMOTE CONTROL VALVE ASSEMBLY TO MAINLINE - REPLACE WITH A NEW 1" DRIP REMOTE CONTROL VALVE ASSEMBLY WITH A NEW JUMBO VALVE BOX: FIELD VERIFY THE EXACT LOCATION OF (E) 1" REMOTE CONTROL VALVE 'A-10' IN A VALVE BOX. REMOVE AND DISPOSE OF (E) VALVE BOX, (E) REMOTE CONTROL VALVE, AND ALL FITTINGS AND NIPPLES TO (E) IRRIGATION MAINLINE WHILE PROTECTING IN PLACE THE (E) 14-GAUGE IRRIGATION WIRES. INSTALL NEW 1" SCH. 80 PVC NIPPLES AND FITTINGS, NEW 1" BALL VALVE VALVE, NEW 1" REMOTE CONTROL VALVE, AND NEW 1" PRESSURE REGULATING FILTER AS PER DRIP REMOTE CONTROL VALVE DETAIL. INSTALL NEW 3M WIRE CONNECTORS AND CONNECT EXISTING 14-GAUGE WIRES TO NEW REMOTE CONTROL VALVE SOLENOID. INSTALL NEW SCH. 40 PVC LATERALS FROM NEW REMOTE CONTROL VALVE TO SUPPLY ALL NEW SHRUB DRIP EMITTERS AS PER IRRIGATION PLAN. REPAIR ANY DAMAGE TO EXISTING PVC LATERAL PIPING OR 14-GAUGE WIRES AS A RESULT OF THIS NEW WORK. INSTALL NEW PLASTIC JUMBO GREEN RECTANGULAR VALVE BOX WITH HEAT STAMPED STATION NUMBER, VERIFIED IN THE FIELD, ON VALVE BOX LID. INSTALL A NEW STANDARD YELLOW CHRISTY ID TAG ON VALVE SOLENOID WITH MATCHING STATION NUMBER.
E	INSTALL 3/4" SCH. 40 PVC BALL VALVE IN VALVE BOX ON EXISTING IRRIGATION LATERAL TO ISOLATE WATER SUPPLY TO ADJACENT (E) LANDSCAPE DRIP IRRIGATION PLANTER: EXCAVATE AND EXPOSE THE (E) BURIED $\frac{3}{4}$" PVC DRIP SYSTEM LATERAL PIPE THAT SUPPLIES WATER TO AN (E) LANDSCAPE PLANTING AREA SOUTH OF THIS LOCATION. THE EXACT LOCATION OF THIS PVC LATERAL IS UNKNOWN. EXCAVATE ALONG EXISTING CONCRETE CURB TO FIELD VERIFY THE EXACT LOCATION OF THE (E) $\frac{3}{4}$" PVC DRIP LATERAL PIPE. TRENCH AND INSTALL NEW $\frac{3}{4}$" SCH. 40 PVC LATERAL PIPE DOWNSTREAM FROM NEW DRIP FLUSH VALVE LOCATION AND CONNECT TO (E) $\frac{3}{4}$" PVC DRIP LATERAL PIPE TO RESUPPLY WATER TO THE (E) LANDSCAPE PLANTING LOCATION. COORDINATE THIS WORK WITH VENTURA COLLEGE REPRESENTATIVE IN THE FIELD.

SEASONAL IRRIGATION APPLICATION SCHEDULE

VALVE NUMBER / HYDROZONE NUMBER	WINTER		SPRING		SUMMER		FALL	
	MINUTES	DAYS ON	MINUTES	DAYS ON	MINUTES	DAYS ON	MINUTES	DAYS ON
INDIVIDUAL DRIP EMITTERS - SUN								
A-10	5	2	7	3	10	3	7	3
INDIVIDUAL DRIP EMITTERS - SUN								
A-11	20	2	20	3	30	3	20	3

NEW REMOTE CONTROL VALVE KEY

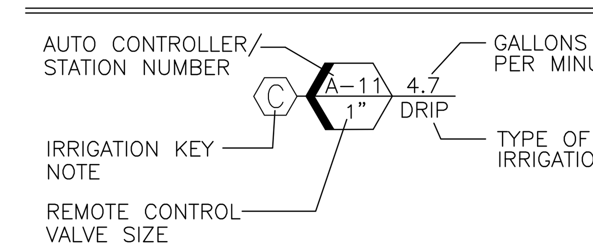

DIVISION OF THE STATE ARCHITECT

IDENTIFICATION STAMP
DIV. OF THE STATE ARCHITECT
APP: 03-124589 INC:
REVIEWED FOR
SS ☑ FLS ☑ ACS ☑
DATE: 04/15/2025

VENTURA COUNTY COMMUNITY COLLEGE DISTRICT
761 EAST DAILY DRIVE
CAMARILLO, CALIFORNIA 93010
TEL: (805) 652-5500

PROJECT TITLE AND SCHOOL LOCATION

VENTURA COMMUNITY COLLEGE STEM MODULAR BUILDING
VENTURA COMMUNITY COLLEGE
4667 TELEGRAPH RD.
VENTURA, CA 93003

COMMISSIONED ARCHITECT

AMADOR
amador whittle architects, inc.
28328 AGOURA RD, 203 | AGOURA HILLS CA, 91301 | 805-558-4334

CONSULTANT

JORDAN & BAIN
LANDSCAPE ARCHITECTS, INC.
459 NORTH VENTURA AVE., VENTURA CA 93001
(805) 642-3641 FAX (805) 653-7874

STAMPS/SEALS

REGISTERED LANDSCAPE ARCHITECT
PAUL J. JORDAN
1443
SIGNATURE
02/2026
RENEWAL DATE
09/03/24
DATE
STATE OF CALIFORNIA

LICENSED ARCHITECT
WILLIAM JORGE AMADOR
C-20348
JANUARY 31, 2027
RENEWAL DATE
STATE OF CALIFORNIA

DSA V3 SUBMITTAL 03/21/2025

SHEET TITLE:

IRRIGATION LEGEND AND NOTES

PROJECT NO.: 22-VCCCD-08	PROJECT ARCH: Designer
DRAWN: pj, jb	CHECKED: Checker

SHEET NUMBER:

L1.2

DATE: 12/19/24
SHEET: ___ OF ___

SYMBOL	QUANTITY	SIZE	BOTANICAL NAME COMMON NAME	DETAIL REFERENCE
	1	24" BOX MULTI-TRUNK	CERCIS C. 'FOREST PANSY' PURPLE-LEAF REDBUD	2-3 / L3.1
	3	24" BOX STANDARD	KOELREUTERIA PANICULATA GOLDEN RAIN TREE	2-3-4 / L3.1
	1	36" BOX MULTI	ARBUTUS 'MARINA'	2-3-4 / L3.1

SHRUBS

SYMBOL	QUANTITY	SIZE	BOTANICAL NAME COMMON NAME	DETAIL REFERENCE
▫	23	5 GALLON	ARCTOSTAPHYLOS 'EMERALD CARPET'	1 / L3.1
Ⓐ	8	5 GALLON	ARBITUS UNEDO 'OKTOBERFEST'	1 / L3.1
•	47	5 GALLON	BACCHARIS PILULARIS 'TWIN PEAKS'	1 / L3.1
Ⓒ	30	5 GALLON	CEANOTHUS G.H.'YANKEE POINT'	1 / L3.1
Ⓕ	22	5 GAL	FRANGULA CALIFORNICA 'MOUND SAN BRUNO'	1 / L3.1
C	4	5 GAL	CALLIANDRA CALIFORNICA BAJA FAIRY DUSTER	1 / L3.1

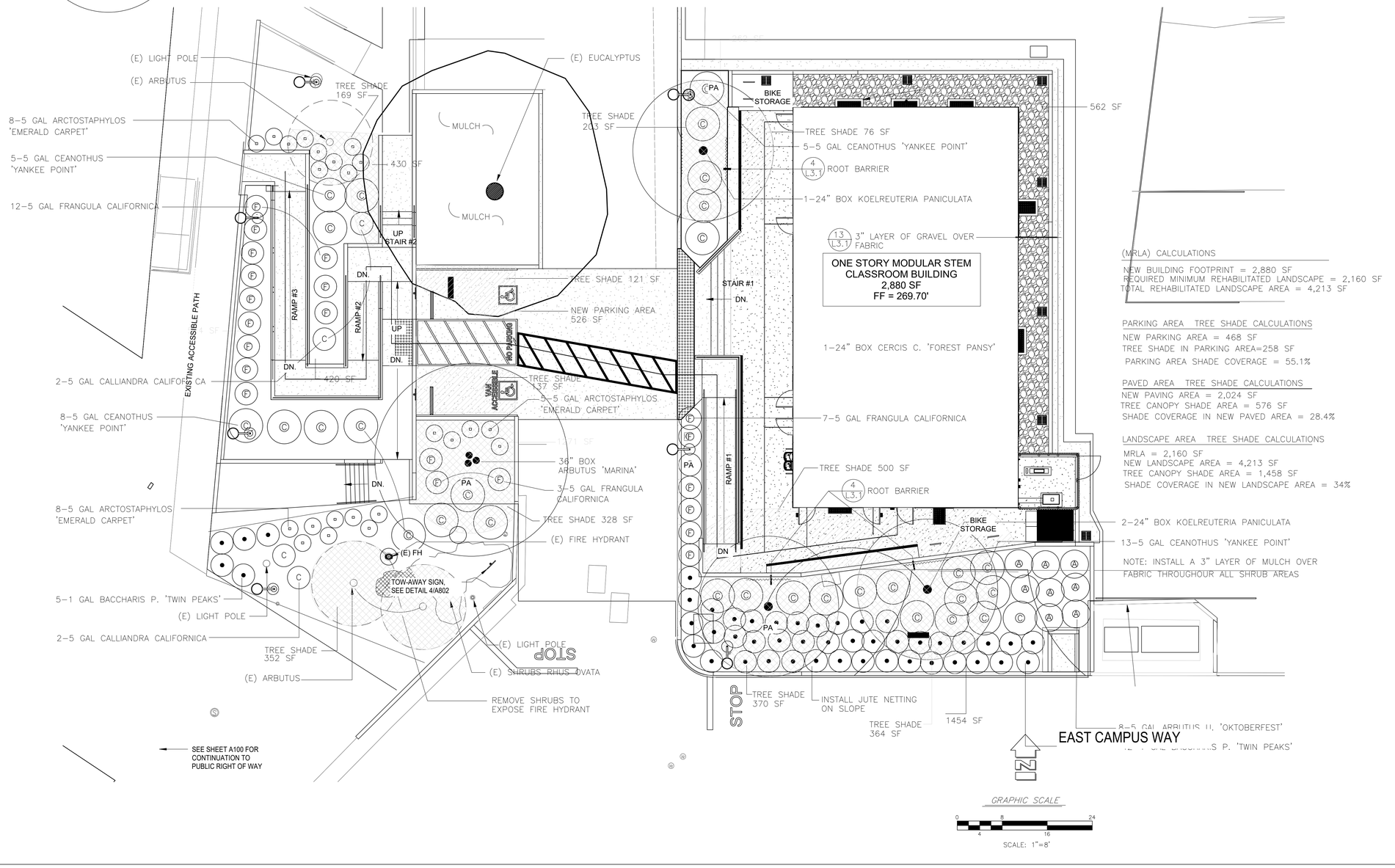

(MRLA) CALCULATIONS

NEW BUILDING FOOTPRINT = 2,880 SF
REQUIRED MINIMUM REHABILITATED LANDSCAPE = 2,160 SF
TOTAL REHABILITATED LANDSCAPE AREA = 4,213 SF

PARKING AREA TREE SHADE CALCULATIONS

NEW PARKING AREA = 468 SF
TREE SHADE IN PARKING AREA=258 SF
PARKING AREA SHADE COVERAGE = 55.1%

PAVED AREA TREE SHADE CALCULATIONS

NEW PAVING AREA = 2,024 SF
TREE CANOPY SHADE AREA = 576 SF
SHADE COVERAGE IN NEW PAVED AREA = 28.4%

LANDSCAPE AREA TREE SHADE CALCULATIONS

MRLA = 2,160 SF
NEW LANDSCAPE AREA = 4,213 SF
TREE CANOPY SHADE AREA = 1,458 SF
SHADE COVERAGE IN NEW LANDSCAPE AREA = 34%

DIVISION OF THE STATE ARCHITECT

IDENTIFICATION STAMP
DIV. OF THE STATE ARCHITECT
APP: 03-124589 INC:
REVIEWED FOR
SS ☑ FLS ☑ ACS ☑
DATE: 04/15/2025

VENTURA COUNTY COMMUNITY COLLEGE DISTRICT

761 EAST DAILY DRIVE
CAMARILLO, CALIFORNIA 93010
TEL: (805) 652-5500

PROJECT TITLE AND SCHOOL LOCATION

VENTURA COMMUNITY COLLEGE STEM MODULAR BUILDING

VENTURA COMMUNITY COLLEGE
4667 TELEGRAPH RD.
VENTURA, CA 93003

COMMISSIONED ARCHITECT

AMADOR

amador whittle architects, inc.
28328 AGOURA RD, 203 | AGOURA HILLS CA, 91301 | 805-558-4334

CONSULTANT

JORDAN & BAIN
LANDSCAPE ARCHITECTS, INC.
459 NORTH VENTURA AVE., VENTURA CA 93001
(805) 642-3641 FAX (805) 653-7874

STAMPS/SEALS

REGISTERED LANDSCAPE ARCHITECT
PAUL JORDAN
2100
SIGNATURE
02/29/25
RENEWAL DATE
06/01/24
DATE
STATE OF CALIFORNIA

LICENSED ARCHITECT
WILLIAM JORGE AMADOR
C-20348
JANUARY 31, 2027
RENEWAL DATE
STATE OF CALIFORNIA

DSA V3 SUBMITTAL 03/21/2025

SHEET TITLE:

PLANTING PLAN

PROJECT NO.: 22-VCCCD-08	PROJECT ARCH: Designer
DRAWN: pj, jb	CHECKED: Checker

SHEET NUMBER:

L2.1

DATE: 12/19/24 | SHEET: ___ OF ___

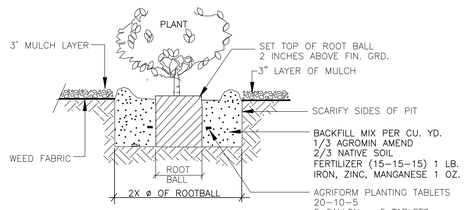

1 SHRUB PLANTING DETAIL N.T.S.

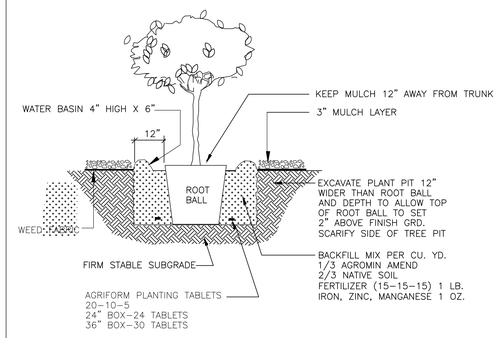

2 TREE PLANTING DETAIL N.T.S.

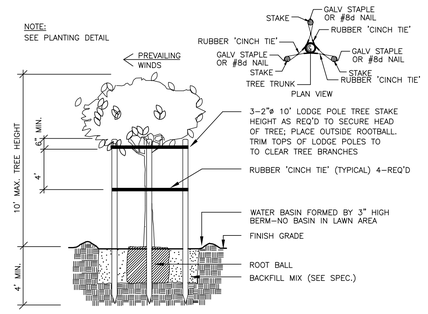

3 TREE STAKING DETAIL N.T.S.

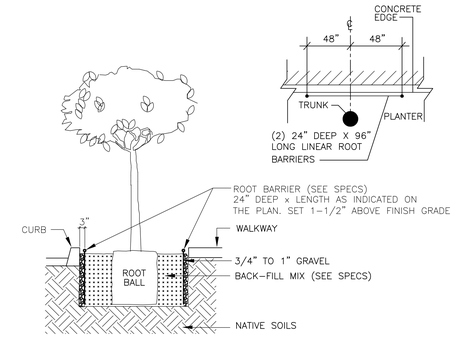

4 ROOT BARRIER N.T.S.

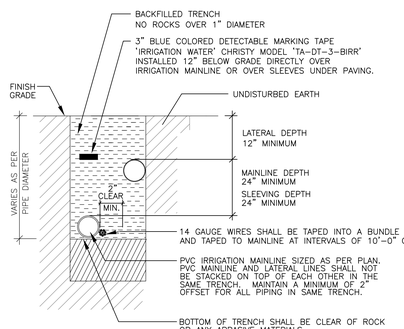

5 IRRIGATION PIPING TRENCH SECTION N.T.S.

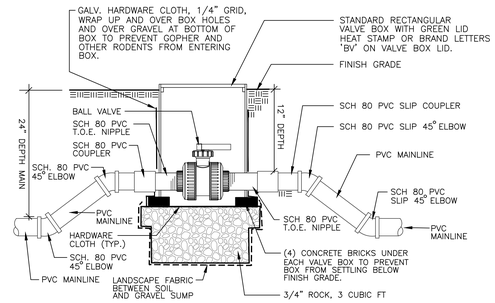

NOTES:
1. BOX TO BE INSTALLED AS TO ALLOW FOR PROPER OPERATION OF BALL VALVE INSTALL AT RIGHT ANGLE TO HARDSCAPE EDGE, INSTALL VALVE IN CENTER OF BOX.
2. INSTALL VALVE BOX EXTENSIONS AS REQUIRED TO ACHIEVE PROPER VALVE INSTALLATION AT MAIN LINE DEPTH.
3. HARDWARE CLOTH: GALVANIZED WELDED STEEL, MESH SHAPE SQUARE 1/4" x 1/4" IN SIZE, GAUGE 23 (MINIMUM THICKNESS SIZE).

6 SCH. 80 PVC BALL VALVE ON IRRIGATION MAINLINE N.T.S.

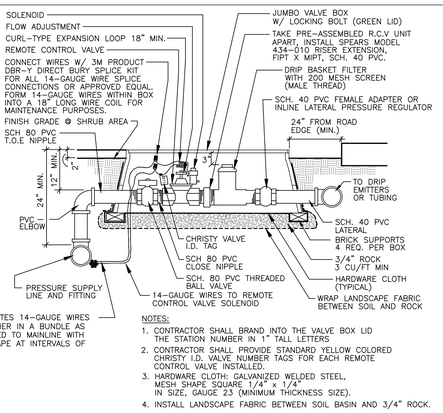

SYMBOL DENOTES 14–GAUGE WIRES TAPED TOGETHER IN A BUNDLE AS WELL AS TAPED TO MAINLINE WITH ELECTRICAL TAPE AT INTERVALS OF 10'–0" O.C.

NOTES:
1. CONTRACTOR SHALL BRAND INTO THE VALVE BOX LID THE STATION NUMBER IN 1" TALL LETTERS
2. CONTRACTOR SHALL PROVIDE STANDARD YELLOW COLORED CHRISTY I.D. VALVE NUMBER TAGS FOR EACH REMOTE CONTROL VALVE INSTALLED.
3. HARDWARE CLOTH: GALVANIZED WELDED STEEL, MESH SHAPE SQUARE 1/4" x 1/4" IN SIZE, GAUGE 23 (MINIMUM THICKNESS SIZE).
4. INSTALL LANDSCAPE FABRIC BETWEEN SOIL BASIN AND 3/4" ROCK.

7 DRIP REMOTE CONTROL VALVE ASSEMBLY N.T.S.

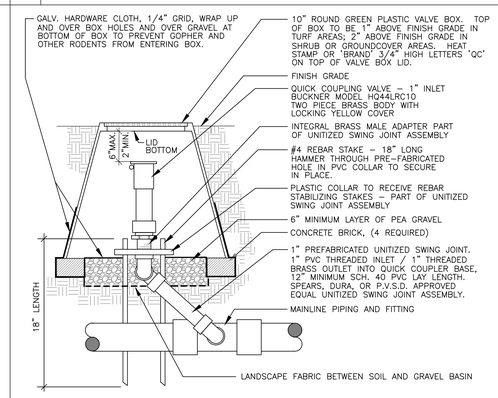

8 QUICK COUPLER IN VALVE BOX N.T.S.

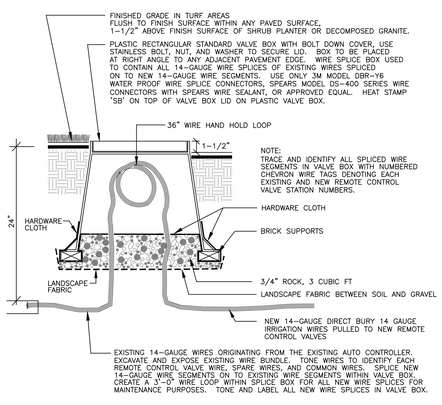

9 IRRIGATION WIRE SPLICE BOX N.T.S.

NOTES:
1. USE WELD–ON PRIMER MODEL 'P–70' AND WELD–ON SOLVENT WELD CEMENT MODEL '795 CLEAR', OR APPROVED EQUAL, TO ATTACH BLACK COLORED PVC MALE ADAPTERS, GPH MODEL G436073–B, TO FLEXIBLE PVC HOSE.
2. INSTALL (3) 0.4 GALLON PER HOUR PRESSURE COMPENSATING HIGH FLOW DRIP EMITTERS FOR EACH 24" BOX TREE PLANTED. SPACE EMITTERS EVENLY APART FROM EACH OTHER AROUND THE CIRCUMFERENCE OF THE TREE ROOT BALL CONTAINED WITHIN 4" TALL SOIL BASIN. IRRIGATION WATER SHOULD BE DISPERSED EVENLY OVER THE TREE ROOT BALL AND PLANTING BASIN.
3. INSTALL (1) 0.2 GALLON PER HOUR PRESSURE COMPENSATING HIGH FLOW DRIP EMITTER FOR EACH SHRUB PLANTED. POSITION EMITTER OVER EDGE OF ROOT BALL CONTAINED WITHIN 4" TALL SOIL BASIN. IRRIGATION WATER SHOULD BE DISPERSED EVENLY OVER THE SHRUB ROOT BALL WITHIN THE PLANTING SOIL BASIN.

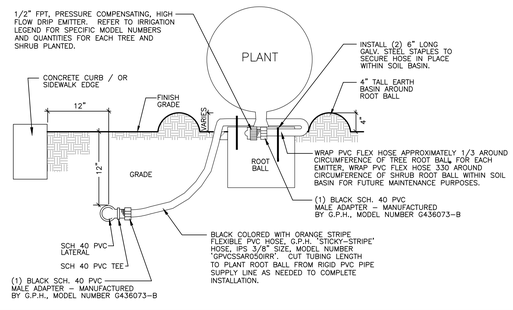

10 HIGH FLOW DRIP EMITTER ON PVC FLEXIBLE HOSE N.T.S.

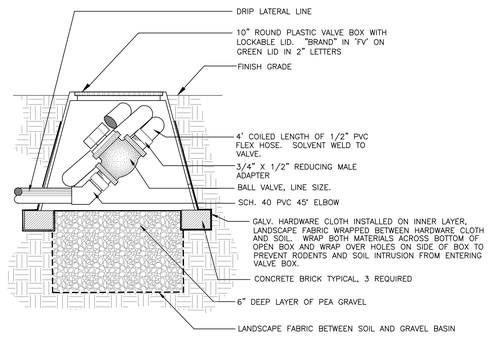

11 DRIP SYSTEM FLUSH VALVE N.T.S.

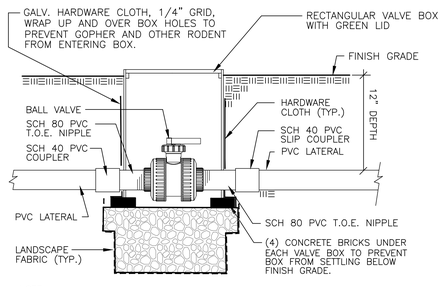

NOTE:
BOX TO BE INSTALLED AS TO ALLOW FOR PROPER OPERATION OF BALL VALVE INSTALL AT RIGHT ANGLE TO HARDSCAPE EDGE, INSTALL VALVE IN CENTER OF BOX.

INSTALL VALVE BOX EXTENSIONS AS REQUIRED TO ACHIEVE PROPER VALVE INSTALLATION AT MAIN LINE DEPTH.

HARDWARE CLOTH: GALVANIZED WELDED STEEL, MESH SHAPE SQUARE 1/4" x 1/4" IN SIZE, GAUGE 23 (MINIMUM THICKNESS SIZE).

12 SCH. 40 PVC BALL VALVE ON LATERAL PIPING N.T.S.

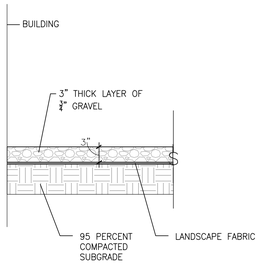

13 GRAVEL MULCH N.T.S.

14 NOT USED

15 NOT USED

16 NOT USED

DIVISION OF THE STATE ARCHITECT

IDENTIFICATION STAMP
DIV. OF THE STATE ARCHITECT
APP: 03-124589 INC:
REVIEWED FOR
SS ☑ FLS ☑ ACS ☑
DATE: 04/15/2025

VENTURA COUNTY COMMUNITY COLLEGE DISTRICT

761 EAST DAILY DRIVE
CAMARILLO, CALIFORNIA 93010
TEL: (805) 652-5500

PROJECT TITLE AND SCHOOL LOCATION

VENTURA COMMUNITY COLLEGE STEM MODULAR BUILDING
VENTURA COMMUNITY COLLEGE
4667 TELEGRAPH RD.
VENTURA, CA 93003

COMMISSIONED ARCHITECT

AMADOR

amador whittle architects, inc.
28328 AGOURA RD. 203 | AGOURA HILLS CA, 91301 | 805-558-4334

CONSULTANT

JORDAN & BAIN
LANDSCAPE ARCHITECTS, INC.
459 NORTH VENTURA AVE., VENTURA CA 93001
(805) 642–3641 FAX (805) 653–7874

STAMPS/SEALS

REGISTERED LANDSCAPE ARCHITECT PAUL JOR-DAN 6001 SIGNATURE 03/12/25 RENEWAL DATE DATE STATE OF CALIFORNIA

LICENSED ARCHITECT WILLIAM SERGIO AMADOR C-20348 JANUARY 31, 2027 RENEWAL DATE STATE OF CALIFORNIA

△	
△	
△	
△	DSA V3 SUBMITTAL 03/21/2025

SHEET TITLE:

LANDSCAPE DETAILS

PROJECT NO: 22-VCCCD-08	PROJECT ARCH: Designer
DRAWN: pj, jb	CHECKED: Checker
SHEET NUMBER: L3.1	
DATE: 12/19/24	SHEET: ___ OF ___

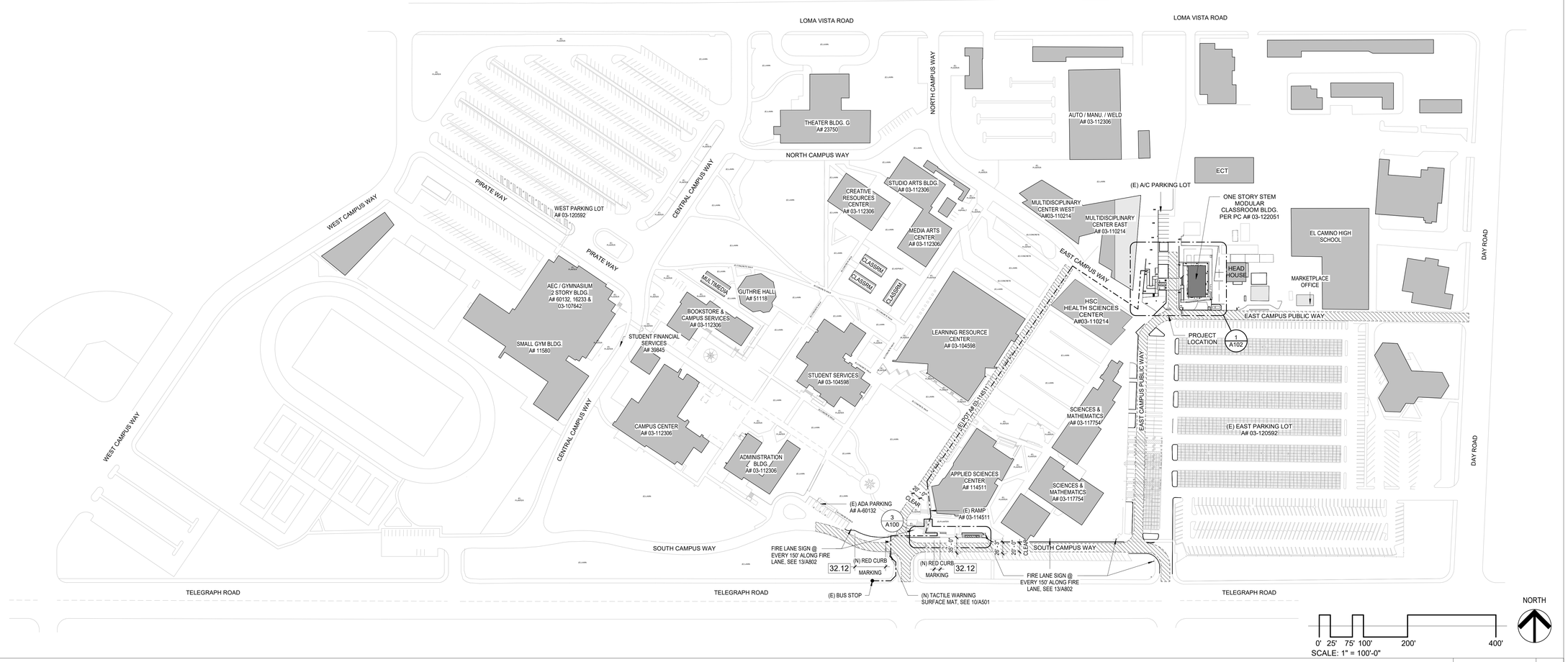

CAMPUS SITE PLAN | 1" = 100'-0" | 1

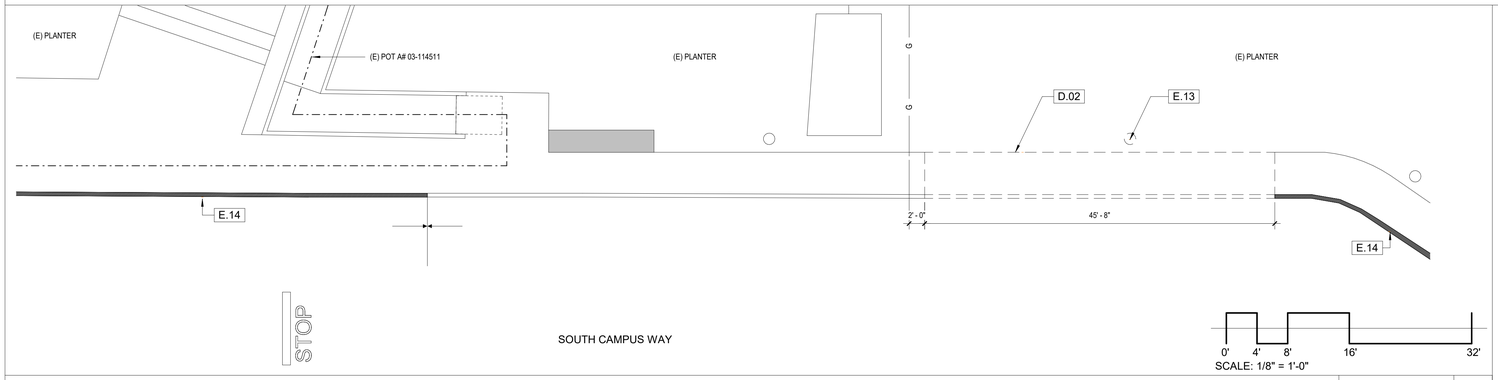

DROP-OFF DEMO PLAN | 1/8" = 1'-0" | 2

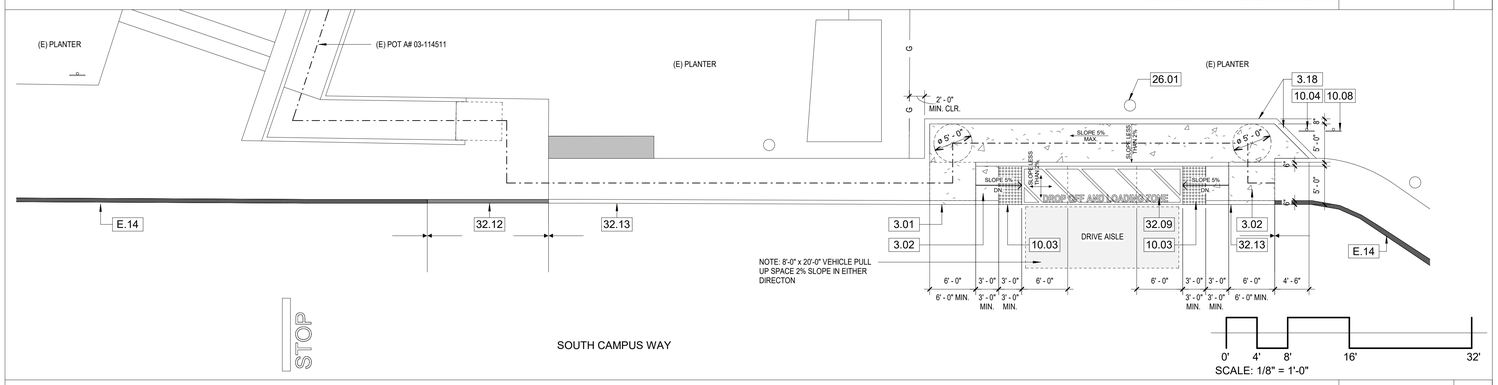

DROP-OFF NEW PLAN | 1/8" = 1'-0" | 3

LEGEND

	ACCESSIBLE PATH OF TRAVEL A#03-110214 - SEE SITE NOTE #2
BLDG	EXISTING BUILDING NOT IN SCOPE
BLDG	AREA OF WORK AT (E) BLDG.
	CONCRETE HARDSCAPE
	TRUNCATED DOME MAT
(E)FH	(E) FIRE HYDRANT
	(E) POLE LIGHT
	20'-0" WIDE EMERGENCY VEHICLE ACCESS ROADWAY
G	(E) GAS LINE - PROTECT IN PLACE
	(E) RED CURB MARKING
	(N) RED CURB MARKING

KEYNOTES

3.01	6" CONCRETE CURB
3.02	CONCRETE RAMP WITH MAX. CROSS SLOPE 2%, SEE CIVIL DWGS.
3.18	8" RETAINING WALL
10.03	TACTILE WARNING TRUNCATED DOME MAT - SEE DETAIL 10/A501
10.04	POST MOUNTED FIRE LANE SIGN EVERY 150' ALONG FIRE LANE - SEE DETAIL 13/A802
10.08	POST MOUNTED DROP-OFF AND LOADING SIGN - SEE DETAIL 6/A801
26.01	(N) LOCATION FOR RELOCATED (E)LIGHT STANDARD SEE 2/E604
32.09	PAINT MARKINGS OF DROP OFF AND LOADING ZONE WITH A PAINTED BORDERLINE AROUND PERIMETER WITH HATCHED LINES A MAXIMUM OF 36" ON CENTER IN A CONTRASTING COLOR WITH THAT OF THE AISLE SURFACE.
32.12	PAINT RED CURB MARKING: CURB TOP AND SIDE PAINTED RED, AND THE WORDS, "FIRE LANE" IN WHITE, SHALL BE STENCILED ON THE TOP AND SIDE OF ALL RED CURBS AT A MAXIMUM INTERVAL OF 50 FEET.
32.13	REPAINT CURB TOP AND SIDE YELLOW
D.02	DEMOLISH
E.13	(E) AREA LIGHT TO BE RELOCATED SEE ELECTRICAL AND ARCHITECTURE FOR LOCATION
E.14	(E) RED CURB MARKING: CURB TOP AND SIDE PAINTED RED, AND THE WORDS, "FIRE LANE" IN WHITE, STENCILED ON THE TOP AND SIDE OF RED CURBS AT A MAXIMUM INTERVAL OF 50 FEET.

DROP OFF AND LOADING ZONE NOTE OF COMPLIANCE:
11B-503.1 DROP OFF AND LOADING ZONE SHALL MEET 11B-503.
11B-503.2 VEHICULAR PULL-UP SPACE IS VEHICULAR AISLE CLOSEST TO DROP OFF AREA 21'-0" LONG BY AISLE WIDTH, EXCEEDS THE REQUIRED 20 FEET LONG X 96" WIDE.
11B-503.3 ACCESS AISLE IS PARALLEL AND ADJACENT TO VEHICULAR PULL-UP SPACE AND ADJOINS AN ACCESSIBLE ROUTE AND DOES NOT OVERLAP THE VEHICULAR WAY. ACCESS AISLE EXCEEDS 60 INCH MINIMUM AND IS FULL LENGTH OF THE VEHICULAR PULL-UP SPACE SERVED. MARKINGS ARE PROVIDED WITH A PAINTED BORDERLINE AROUND PERIMETER WITH HATCHED LINES A MAXIMUM OF 36" ON CENTER IN A CONTRASTING COLOR WITH THAT OF THE AISLE SURFACE (REFER TO KEYNOTE 32.09).
11B-503.4 ACCESS AISLE SHALL BE THE SAME LEVEL AS THE VEHICLE PULL-UP SPACE SERVED WITH SLOPES NOT EXCEEDING 1:48, DETECTIBLE WARNINGS ARE NOT PERMITTED IN LENGTH OF ACCESS AISLE (DETECTABLE WARNINGS ARE OUTSIDE THE ACCESS AISLE MARKED. KEYNOTE 10.03).
11B-503.5 VERTICAL CLEARANCES ARE MAINTAINED, A MINIMUM VERTICAL CLEARANCE AT DESIGNATED PASSENGER DROP-OFF AND LOADING ZONES, AND ALONG AT LEAST ONE VEHICLE ACCESS ROUTE TO THE AREA FROM SITE ENTRANCES AND EXITS, SHALL PROVIDE FOR 115 INCH VERTICAL CLEARANCE.

SITE NOTES

1. ALL ITEMS SHOWN ARE NEW UNLESS NOTED AS EXISTING.
2. PATH OF TRAVEL (P.O.T.) AND ACCESSIBLE ROUTE OF TRAVEL AS INDICATED IS A COMMON BARRIER FREE ACCESSIBLE ROUTE WITHOUT ANY ABRUPT VERTICAL CHANGES EXCEEDING 1/2" BEVELED AT 1:2 MAXIMUM SLOPE, EXCEPT THAT LEVEL CHANGES DO NOT EXCEED 1/4" VERTICAL AND IS AT LEAST 48" WIDE. THE SURFACE SHALL BE SLIP RESISTANT, STABLE AND FIRM. PASSING SPACES AT LEAST 60" x 60" SHALL BE LOCATED NOT MORE THAN 200' APART. PARTS OF P.O.T. WITH CONTINUOUS GRADIENTS SHALL HAVE 60" LEVEL AREAS CROSS-SLOPE LESS THAN 5% RUNNING SLOPE IN THE DIRECTION OF TRAVEL. SLOPES GREATER THAN 5% TO A MAXIMUM OF 8.33% SHALL BE CONSIDERED AS A RAMP (2019 CBC 11B-405.2). THERE SHALL BE NO DROP-OFF OVER 4" ALONG THE EDGE OF WALK OR LANDING. PROVIDE 6" HIGH WARNING CURB IF HIGHER THAN 4". P.O.T. SHALL BE MAINTAINED FREE OF OBJECTS GREATER THAN 4" PROJECTION FROM WALL AND ABOVE 27" AND LESS THAN 80" (11B-307.2). ARCHITECT TO VERIFY THAT ALL BARRIERS IN THE PATH OF TRAVEL HAVE BEEN REMOVED OR WILL BE REMOVED UNDER THIS PROJECT, AND PATH OF TRAVEL COMPLIES WITH CBC 11B-403.
3. DESIGN PROFESSIONAL IN GENERAL RESPOSIBLE CHARGE STATEMENT: THE P.O.T. IDENTIFIED IN THESE CONSTRUCTION DOCUMENTS IS COMPLIANT WITH THE CURRENT APPLICABLE CALIFORNIA BUILDING CODE ACCESSIBILITY PROVISIONS FOR PATH OF TRAVEL REQUIREMENTS FOR ALTERATIONS, ADDITIONS AND STRUCTURAL REPAIRS. AS PART OF THE DESIGN OF THIS PROJECT, THE P.O.T. WAS EXAMINED AND ANY ELEMENTS, COMPONENTS OR PORTIONS OF THE P.O.T. THAT WERE DETERMINED TO BE NONCOMPLIANT 1) HAVE BEEN IDENTIFIED AND 2) THE CORRECTIVE WORK NECESSARY TO BRING THEM INTO COMPLIANCE HAS BEEN INCLUDED WITHIN THE SCOPE OF THIS PROJECT'S WORK THROUGH DETAILS, DRAWINGS AND SPECIFICATIONS INCORPORATED INTO THESE CONSTRUCTION DOCUMENTS. ANY NONCOMPLIANT ELEMENTS, COMPONENTS OR PORTIONS OF P.O.T. THAT WILL NOT BE CORRECTED BY THIS PROJECT BASED ON VALUATION THRESHOLD LIMITATIONS OR FINDING OF UNREASONABLE HARDSHIP ARE SO INDICATED IN THESE CONSTRUCTION DOCUMENTS. DURING CONSTRUCTION, IF P.O.T. ITEMS WITHIN THE SCOPE OF THE PROJECT REPRESENTED AS CODE COMPLIANT ARE FOUND TO BE NONCOMFORMING BEYOND REASONABLE CONSTRUCTION TOLERANCE, THEY SHALL BE BROUGHT INTO COMPLIANCE WITH THE CBC AS A PART OF THIS PROJECT BY MEANS OF CONSTRUCTION CHANGE DOCUMENT.
4. EMERGENCY VEHICLE ACCESS ROADWAY SHALL BE IDENTIFIED BY RED CURB MARKING AND ROADWAY SURFACE MARKING. RED CURB MARKING: CURB TOP AND SIDE PAINTED RED, AND THE WORDS, "FIRE LANE" IN WHITE, SHALL BE STENCILED ON THE TOP AND SIDE OF ALL RED CURBS AT A MAXIMUM INTERVAL OF 50 FEET. SUCH MARKINGS SHALL BE IN ACCORDANCE WITH LOCAL FIRE DEPARTMENT.

IDENTIFICATION STAMP
DIV. OF THE STATE ARCHITECT
APP: 03-124589 INC:
REVIEWED FOR
SS ☑ FLS ☑ ACS ☑
DATE: 04/15/2025

VENTURA COUNTY COMMUNITY COLLEGE DISTRICT
761 EAST DAILY DRIVE
CAMARILLO, CALIFORNIA 93010
TEL: (805) 652-5500

PROJECT TITLE AND SCHOOL LOCATION

VENTURA COMMUNITY COLLEGE STEM MODULAR BUILDING

VENTURA COMMUNITY COLLEGE
4667 TELEGRAPH RD.
VENTURA, CA 93003

COMMISSIONED ARCHITECT

AMADOR
amador whittle architects, inc.
28328 AGOURA RD, 203 | AGOURA HILLS CA, 91301 | 805-558-4334

CONSULTANT

STAMPS/SEALS

LICENSED ARCHITECT WILLIAM AMADOR C-20348 JANUARY 31, 2027 RENEWAL DATE STATE OF CALIFORNIA

DSA V3 SUBMITTAL 03/21/2025

SHEET TITLE:

CAMPUS SITE PLAN & STUDENT DROP OFF SITE PLAN

PROJECT NO: 22-VCCCD-08	PROJECT ARCH: Designer
DRAWN: Author	CHECKED: Checker

SHEET NUMBER:

A100

DATE: 9/3/24 | SHEET: ___ OF ___

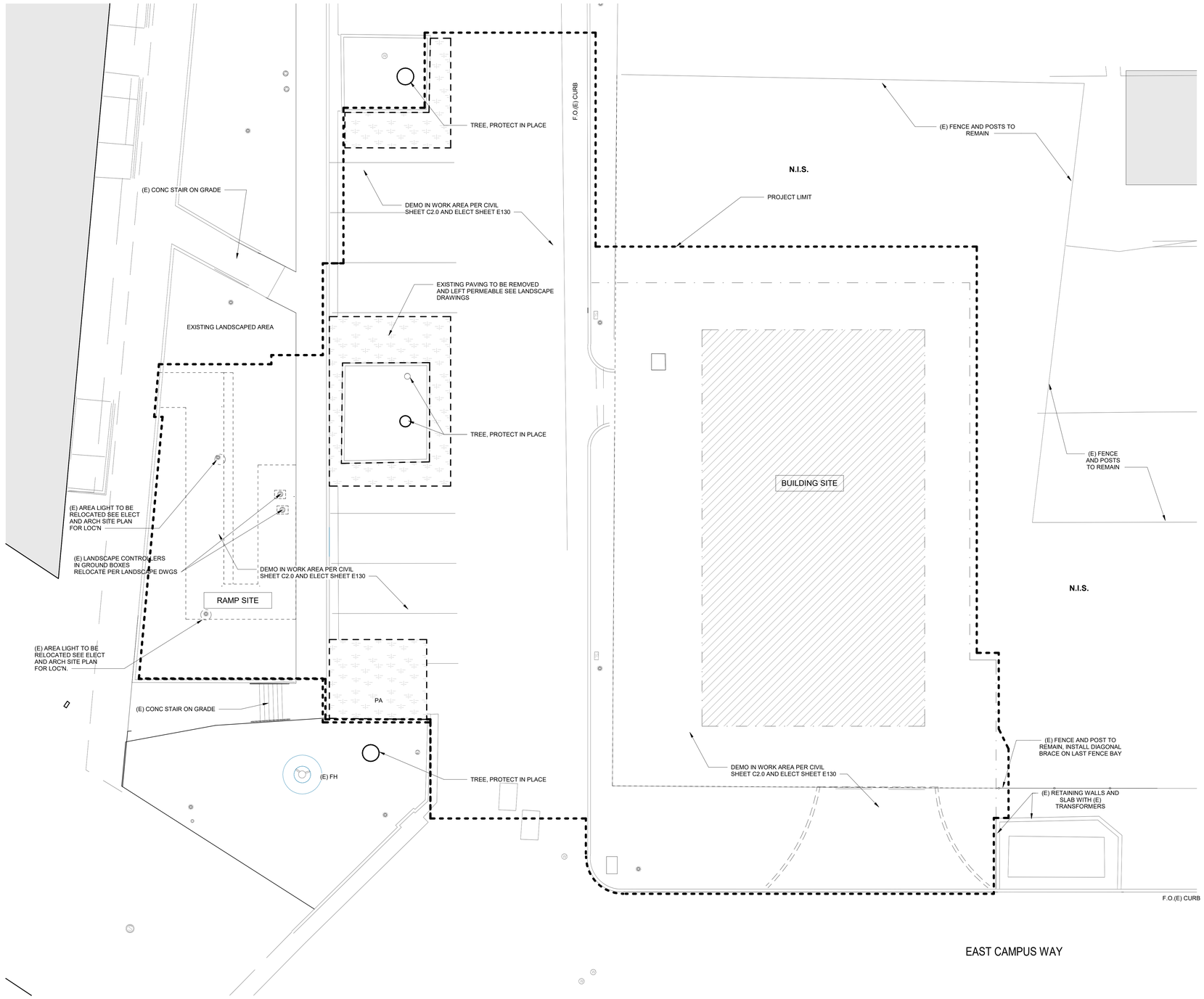

DEMO SITE PLAN | 1/8" = 1'-0" | 1

KEYNOTES

0' 4' 8' 16' 32'
SCALE: 1/8" = 1'-0"

IDENTIFICATION STAMP
DIV. OF THE STATE ARCHITECT
APP: 03-124589 INC:
REVIEWED FOR
SS ☑ FLS ☑ ACS ☑
DATE: 04/15/2025

VENTURA COUNTY COMMUNITY COLLEGE DISTRICT

761 EAST DAILY DRIVE
CAMARILLO, CALIFORNIA 93010
TEL: (805) 652-5500

PROJECT TITLE AND SCHOOL LOCATION

VENTURA COMMUNITY COLLEGE STEM MODULAR BUILDING
VENTURA COMMUNITY COLLEGE
4667 TELEGRAPH RD.
VENTURA, CA 93003

COMMISSIONED ARCHITECT

AMADOR

amador whittle architects, inc.
28328 AGOURA RD, 203 | AGOURA HILLS CA. 91301 | 805-558-4334

CONSULTANT

STAMPS/SEALS

LICENSED ARCHITECT
WILLIAM JORGE AMADOR
C-20348
JANUARY 31, 2027
RENEWAL DATE
STATE OF CALIFORNIA

DSA V3 SUBMITTAL 03/21/2025

SHEET TITLE:

DEMOLITION SITE PLAN

PROJECT NO. 22-VCCCD-08	PROJECT ARCH: WJA
DRAWN: FBG	CHECKED: WJA
SHEET NUMBER: A101	
DATE: 9/3/24	SHEET: ___ OF ___

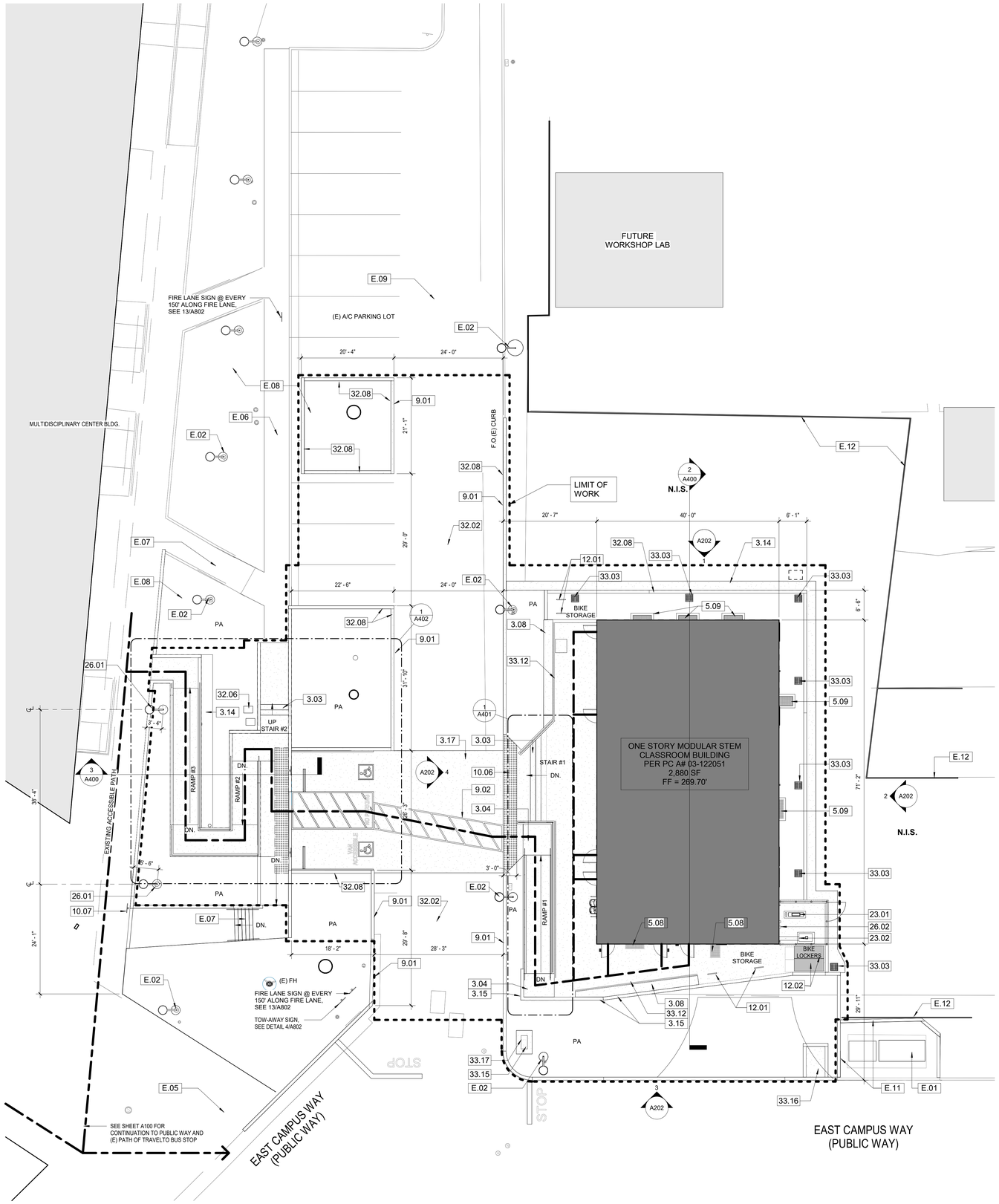

KEYNOTES

3.03	CONCRETE STAIR ON GRADE SEE 23/S011
3.04	CONCRETE LANDING ON GRADE
3.08	CONCRETE BENCH SEE DETAIL 7/A501
3.14	CONCRETE V-DRAIN PER CIVIL SHEET C3.0, SEE DETAIL 14/C5.1
3.15	8" CONCRETE LANDSCAPE WALL SEE 31/S012
3.17	CONCRETE PAVING PER CIVIL SHEET C3.0, SEE DETAIL 2/C5.0
5.08	WALLS AND GRATES FLUSH TO GRADE WITH ADA COMPLIANT GRATES
5.09	WALLS AND GRATES SEE CIVIL C3.0 FOR TOC AT FS
9.01	FIRE LANE; PAINT CURBS BOTH SIDES RED AND STENCIL WITH "NO PARKING FIRE LANE" PER CODE
9.02	PAINT ACCESSIBLE MARKINGS PER DETAIL 2/A801
10.06	RECESSED TACTILE WARNING SURFACE MAT - SEE DETAIL 10/A501
10.07	POST MOUNTED DIRECTIONAL SIGN - SEE DETAIL 10/A802
12.01	CYCLESAFE U/2 BIKE RACK INSTALLED IN-GROUND - REFER TO 2/A502
12.02	CYCLESAFE STANDARD MODEL SM-SO7 BIKE LOCKERS (2), MOUNT AND LEVEL PER MANUFACTURER - REFER TO 3/A502
23.01	MINI SPLIT FAN UNIT PER AMS, MOUNT PER AMS PLANS 2/M1.1A AND 20C/S9.1.
23.02	FUME JET EXHAUST FAN ON CONC SLAB PER MECH M101, STRUCT 26/S012
26.01	(N) LOCATION FOR RELOCATED (E)LIGHT STANDARD SEE 2/E604
26.02	UNIT DISCONNECTS SEE ELECTRICAL E140
32.02	ASPHALT PAVING PER CIVIL SHEET C 3.0 DETAIL 1/C5.0
32.06	RELOCATED LANDSCAPE CONTROLLERS SEE LANDSCAPE DRAWINGS L1.1, L2.1
32.08	CONCRETE CURB PER CIVIL SHEET C3.0 DETAIL 11/C5.0 OR 15/C5.1
33.03	CATCH BASIN PER CIVIL SHEET C3.0 DETAIL 6/C5.0; CONNECT TO STORM DRAIN PER CIVIL SHEET C4.0
33.12	TRENCH DRAIN, REFER TO CIVIL C3.0, DETAIL 12/C5.1; CONNECT TO STORM DRAIN PER CIVIL C4.0
33.15	BACKFLOW DEVICE PER CIVIL SHEET C4.1, DETAIL 13/C5.1
33.16	PARKWAY DRAIN PER CIVIL SHEET C4.0, DETAIL 16/C5.1
33.17	BACKFLOW PREVENTER ENCLOSURE, SEE DETAIL 6/A502
E.01	(E) TRANSFORMERS
E.02	(E) LIGHT STANDARD TO REMAIN, TYPICAL
E.05	(E) CONCRETE PAVED AREA
E.06	(E) CONCRETE SIDEWALK TO REMAIN
E.07	(E) CONCRETE STAIR ON GRADE TO REMAIN
E.08	(E) LANDSCAPED AREA
E.09	(E) PAVED ROADWAY/ PARKING AREA
E.11	(E) RETAINING WALLS AND SLAB
E.12	(E) CHAIN LINK FENCE TO REMAIN

SITE NOTES

1. ALL ITEMS SHOWN ARE NEW UNLESS NOTED AS EXISTING.
2. PATH OF TRAVEL (P.O.T.) AND ACCESSIBLE ROUTE OF TRAVEL AS INDICATED IS A COMMON BARRIER FREE ACCESSIBLE ROUTE WITHOUT ANY ABRUPT VERTICAL CHANGES EXCEEDING 1/2" BEVELED AT 1:2 MAXIMUM SLOPE, EXCEPT THAT LEVEL CHANGES DO NOT EXCEED 1/4" VERTICAL AND IS AT LEAST 48" WIDE. THE SURFACE SHALL BE SLIP RESISTANT, STABLE AND FIRM. PASSING SPACES AT LEAST 60" x 60" SHALL BE LOCATED NOT MORE THAN 200' APART. PARTS OF P.O.T. WITH CONTINUOUS GRADIENTS SHALL HAVE 60" LEVEL AREAS CROSS-SLOPE LESS THAN 5% RUNNING SLOPE IN THE DIRECTION OF TRAVEL. SLOPES GREATER THAN 5% TO A MAXIMUM OF 8.33% SHALL BE CONSIDERED AS A RAMP (2019 CBC 11B-405.2). THERE SHALL BE NO DROP-OFF OVER 4" ALONG THE EDGE OF WALK OR LANDING. PROVIDE 6" HIGH WARNING CURB IF HIGHER THAN 4". P.O.T. SHALL BE MAINTAINED FREE OF OBJECTS GREATER THAN 4" PROJECTION FROM WALL AND ABOVE 27" AND LESS THAN 80" (11B-307.2). ARCHITECT TO VERIFY THAT ALL BARRIERS IN THE PATH OF TRAVEL HAVE BEEN REMOVED OR WILL BE REMOVED UNDER THIS PROJECT, AND PATH OF TRAVEL COMPLIES WITH CBC 11B-403.
3. DESIGN PROFESSIONAL IN GENERAL RESPOSIBLE CHARGE STATEMENT: THE P.O.T. IDENTIFIED IN THESE CONSTRUCTION DOCUMENTS IS COMPLIANT WITH THE CURRENT APPLICABLE CALIFORNIA BUILDING CODE ACCESSIBILITY PROVISIONS FOR PATH OF TRAVEL REQUIREMENTS FOR ALTERATIONS, ADDITIONS AND STRUCTURAL REPAIRS. AS PART OF THE DESIGN OF THIS PROJECT, THE P.O.T. WAS EXAMINED AND ANY ELEMENTS, COMPONENTS OR PORTIONS OF THE P.O.T. THAT WERE DETERMINED TO BE NONCOMPLIANT 1) HAVE BEEN IDENTIFIED AND 2) THE CORRECTIVE WORK NECESSARY TO BRING THEM INTO COMPLIANCE HAS BEEN INCLUDED WITHIN THE SCOPE OF THIS PROJECT'S WORK THROUGH DETAILS, DRAWINGS AND SPECIFICATIONS INCORPORATED INTO THESE CONSTRUCTION DOCUMENTS. ANY NONCOMPLIANT ELEMENTS, COMPONENTS OR PORTIONS OF P.O.T. THAT WILL NOT BE CORRECTED BY THIS PROJECT BASED ON VALUATION THRESHOLD LIMITATIONS OR FINDING OF UNREASONABLE HARDSHIP ARE SO INDICATED IN THESE CONSTRUCTION DOCUMENTS. DURING CONSTRUCTION, IF P.O.T. ITEMS WITHIN THE SCOPE OF THE PROJECT REPRESENTED AS CODE COMPLIANT ARE FOUND TO BE NONCOMFORMING BEYOND REASONABLE CONSTRUCTION TOLERANCE, THEY SHALL BE BROUGHT INTO COMPLIANCE WITH THE CBC AS A PART OF THIS PROJECT BY MEANS OF CONSTRUCTION CHANGE DOCUMENT.
4. GATES WITHIN ACCESSIBLE ROUTE OF TRAVEL MUST COMPLY WITH ALL APPLICABLE DOOR REQUIREMENTS PER 11B-404.

PARKING ANALYSIS

TABLE 11B-208.2 (CBC)

EXISTING PARKING LOT #5 ANALYSIS
(PER 03-110214)

TOTAL PARKING SPACES	12
TOTAL ACCESSIBLE REQUIRED	1
TOTAL ACCESSIBLE PROVIDED	2
TOTAL VAN PROVIDED	1

LEGEND

- CONCRETE FOUNDATION WALL PER AMS PLANS
- METAL GRATE FOR FOUNDATION VENT OR CRAWL SPACE ACCESS SEE AMS DRAWINGS. VERIFY PATH OF TRAVEL REQUIREMENTS WHERE OCCUR ON SITE PLAN
- CONCRETE CURB OR SITE WALL
- LIMITS OF WORK
- PATH OF TRAVEL ACCESSIBLE ROUTE

0' 5' 10' 20' 30'
SCALE: 1" = 10'-0"

NORTH

SITE PLAN | 1" = 10'-0" | 1

IDENTIFICATION STAMP
DIV. OF THE STATE ARCHITECT
APP: 03-124589 INC:
REVIEWED FOR
SS ☑ FLS ☑ ACS ☑
DATE: 04/15/2025

VENTURA COUNTY COMMUNITY COLLEGE DISTRICT
761 EAST DAILY DRIVE
CAMARILLO, CALIFORNIA 93010
TEL: (805) 652-5500

PROJECT TITLE AND SCHOOL LOCATION

VENTURA COMMUNITY COLLEGE STEM MODULAR BUILDING
VENTURA COMMUNITY COLLEGE
4667 TELEGRAPH RD.
VENTURA, CA 93003

COMMISSIONED ARCHITECT

AMADOR

amador whittle architects, inc.
28328 AGOURA RD, 203 | AGOURA HILLS CA, 91301 | 805-558-4334

CONSULTANT

STAMPS/SEALS

LICENSED ARCHITECT
WILLIAM JAMES AMADOR
C-20348
JANUARY 31, 2027
RENEWAL DATE
STATE OF CALIFORNIA

DSA V3 SUBMITTAL 03/21/2025

SHEET TITLE:

SITE PLAN

PROJECT NO: 22-VCCCD-08	PROJECT ARCH: WJA
DRAWN: FBG	CHECKED: WJA
SHEET NUMBER: A102	
DATE: 9/3/24	SHEET: ___ OF ___

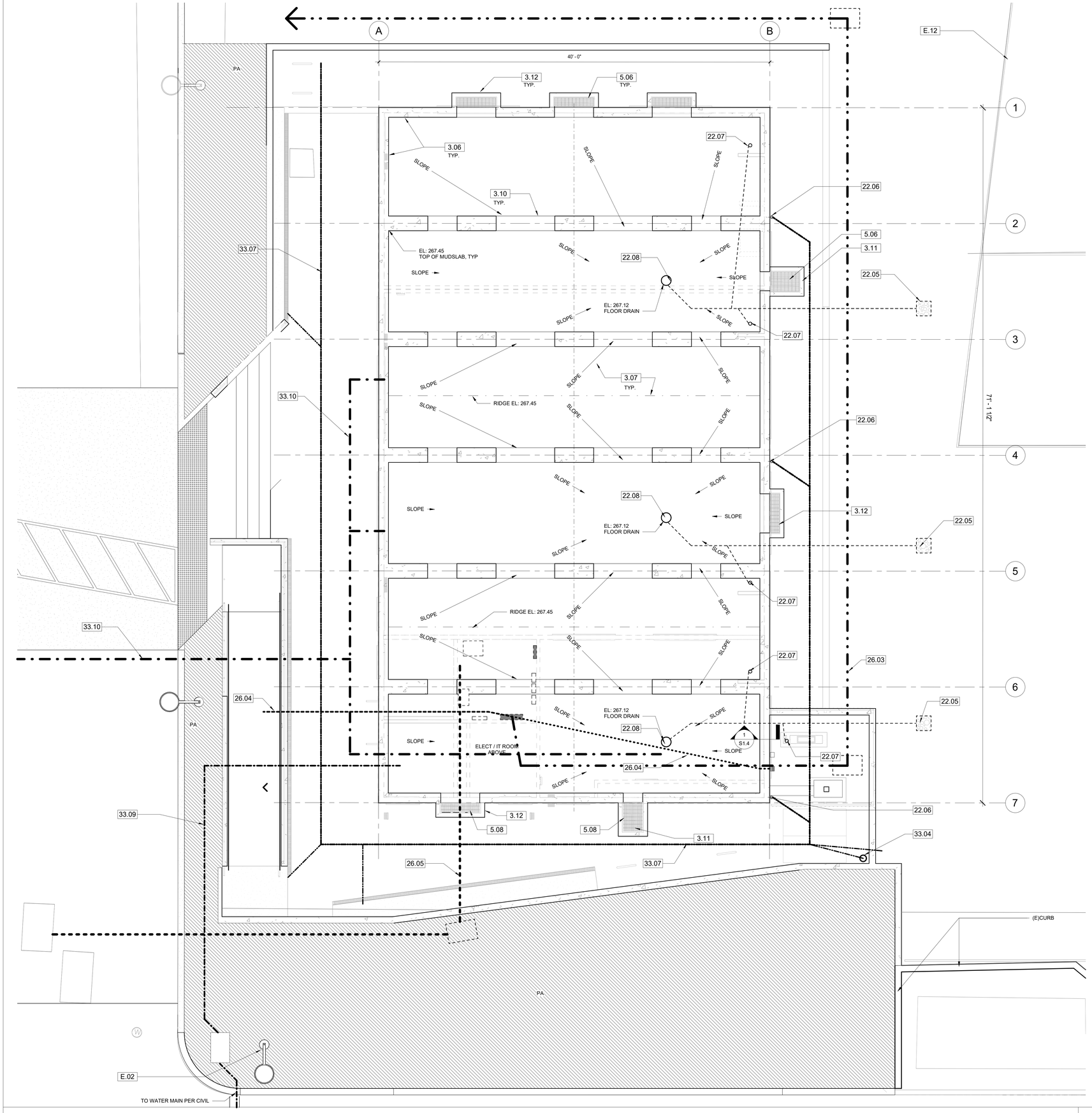

KEYNOTES

3.06	SITE-BUILT CONCRETE FOUNDATION WALLS PER AMS MODULAR PC FOUNDATION PLAN FOR CONCRETE FLOOR W/ 50 + 15 FLOOR LOAD, NOTE TOP OF FOOTING EL: 268.95 TYP
3.07	2" CONCRETE SLAB AT CRAWLSPACE, SLOPE 1% TO DRAIN TO NEAREST AREA DRAIN, OVER 15 MIL VAPOR BARRIER PER SPECIFICATION 07 2600
3.10	OPENINGS IN FOOTINGS PER AMS TYP, FROM BOTTOM OF STEEL BEAM TO BOTTOM OF CONCRETE SLAB, SLAB CONTINUOUS UNDER OPENINGS AND SLOPED TO DRAIN
3.11	CRAWL SPACE ACCESS OPENING, WELL WALLS AND GRATE PER AMS MODULAR PC DETAIL 1/S1.5M - LOCATION MAY VARY
3.12	CRAWLS SPACE VENTILATION WELL WALLS AND GRATE PER AMS MODULAR PC DETAIL 2/S1.4M
5.06	METAL GRATE, FRAME AND HARDWARE PER AMS PLANS; CONTRACTOR TO PURCHASE FROM AMS MODULAR AND INSTALL PER AMS MODULAR PC PLAN DETAILS;
5.08	WALLS AND GRATES FLUSH TO GRADE WITH ADA COMPLIANT GRATES
22.05	DRYWELL PER PLUMBING, MIN 15' FROM BUILDING FOUNDATION SEE SHEET P301 AND DETAIL 4/P301
22.06	DOWNSPOUT, CONNECT TO STORM DRAIN PER CIVIL C4.0
22.07	CONDENSATE DRAIN, CONNECT TO DRYWELL PER PLUMBING P301
22.08	CRAWLSPACE AREA DRAIN CONNECT TO DRYWELL PER PLUMBING P301
26.03	MAIN POWER FEED AND PULL BOX APPROX LOCATION, REFER TO ELECTRICAL SHEET E140
26.04	CONDUIT FOR SITE LIGHTING / SHUTOFFS PER ELECTRICAL E140
26.05	COMM LINES TO PANEL PER ELECT SHEET E140
33.04	AREA DRAIN, SEE CIVIL C3.0 AND DETAIL 9/C5.0
33.07	STORM DRAIN LINE APPROX LOCATION REFER TO CIVIL C 4.0
33.09	WATER LINE APPROX LOCATION PER CIVIL C4.1
33.10	SANITARY SEWER LINE APPROX LOCATION REFER TO CIVIL C4.0
E.02	(E) LIGHT STANDARD TO REMAIN, TYPICAL
E.12	(E) CHAIN LINK FENCE TO REMAIN

GENERAL NOTES

1. MODULAR BUILDING TO BE INSTALLED IS AS PER AMS MODULAR DRAWINGS PC DRAWING SET AND APPROVED POC DRAWINGS. ANY INFORMATION SHOWN HERE IS FOR COORDINATION PURPOSES ONLY. ALL DETAILS, SPECIFICATIONS, INTERIOR FINISHES, DOORS, WINDOWS, WALLS, SYSTEMS AND FURNISHINGS ARE AS PER AMS CONTRACT WITH OWNER AND THEREFORE NOT REPRESENTED HERE

2. THIS WORK INCLUDES ALL SITE RELATED WORK SUCH AS CURBS, SIDEWALKS, RAMPS, STAIRS, PARKING, FLATWORK, LANDSCAPING, FOUNDATIONS, DRAINAGE, UTILITIES, EQUIPMENT, FENCING AND PROPER CONNECTION TO MODULAR BUILDING.

3. ALL WORK THIS SHEET IS BY GENERAL CONTRACTOR

LEGEND

CONCRETE FOUNDATION WALL PER AMS PLANS

METAL GRATE FOR FOUNDATION VENT OR CRAWL SPACE ACCESS SEE AMS DRAWINGS. VERIFY PATH OF TRAVEL REQUIREMENTS WHERE OCCUR ON SITE PLAN

CONCRETE CURB OR SITE WALL

0' 2' 4' 8' 16'

SCALE: 1/4" = 1'-0"

FOUNDATION / UTILITY PLAN | 1/4" = 1'-0" | 1

IDENTIFICATION STAMP
DIV. OF THE STATE ARCHITECT
APP: 03-124589 INC:
REVIEWED FOR
SS ☑ FLS ☑ ACS ☑
DATE: 04/15/2025

VENTURA COUNTY COMMUNITY COLLEGE DISTRICT
MOORPARK OXNARD VENTURA

VENTURA COUNTY COMMUNITY COLLEGE DISTRICT

761 EAST DAILY DRIVE
CAMARILLO, CALIFORNIA 93010
TEL: (805) 652-5500

PROJECT TITLE AND SCHOOL LOCATION

VENTURA COMMUNITY COLLEGE STEM MODULAR BUILDING

VENTURA COMMUNITY COLLEGE
4667 TELEGRAPH RD.
VENTURA, CA 93003

COMMISSIONED ARCHITECT

AMADOR

amador whittle architects, inc.
28328 AGOURA RD, 203 | AGOURA HILLS CA, 91301 | 805-558-4334

CONSULTANT

STAMPS/SEALS

LICENSED ARCHITECT
WILLIAM JORGE AMADOR
C-20348
JANUARY 31, 2027
RENEWAL DATE
STATE OF CALIFORNIA

DSA V3 SUBMITTAL 03/21/2025

SHEET TITLE:

COORDINATION FOUNDATION / UTILITY PLAN

PROJECT NO: 22-VCCCD-08	PROJECT ARCH: WJA
DRAWN: FBG	CHECKED: WJA
SHEET NUMBER: A103	
DATE: 9/3/24	SHEET: ___ OF ___

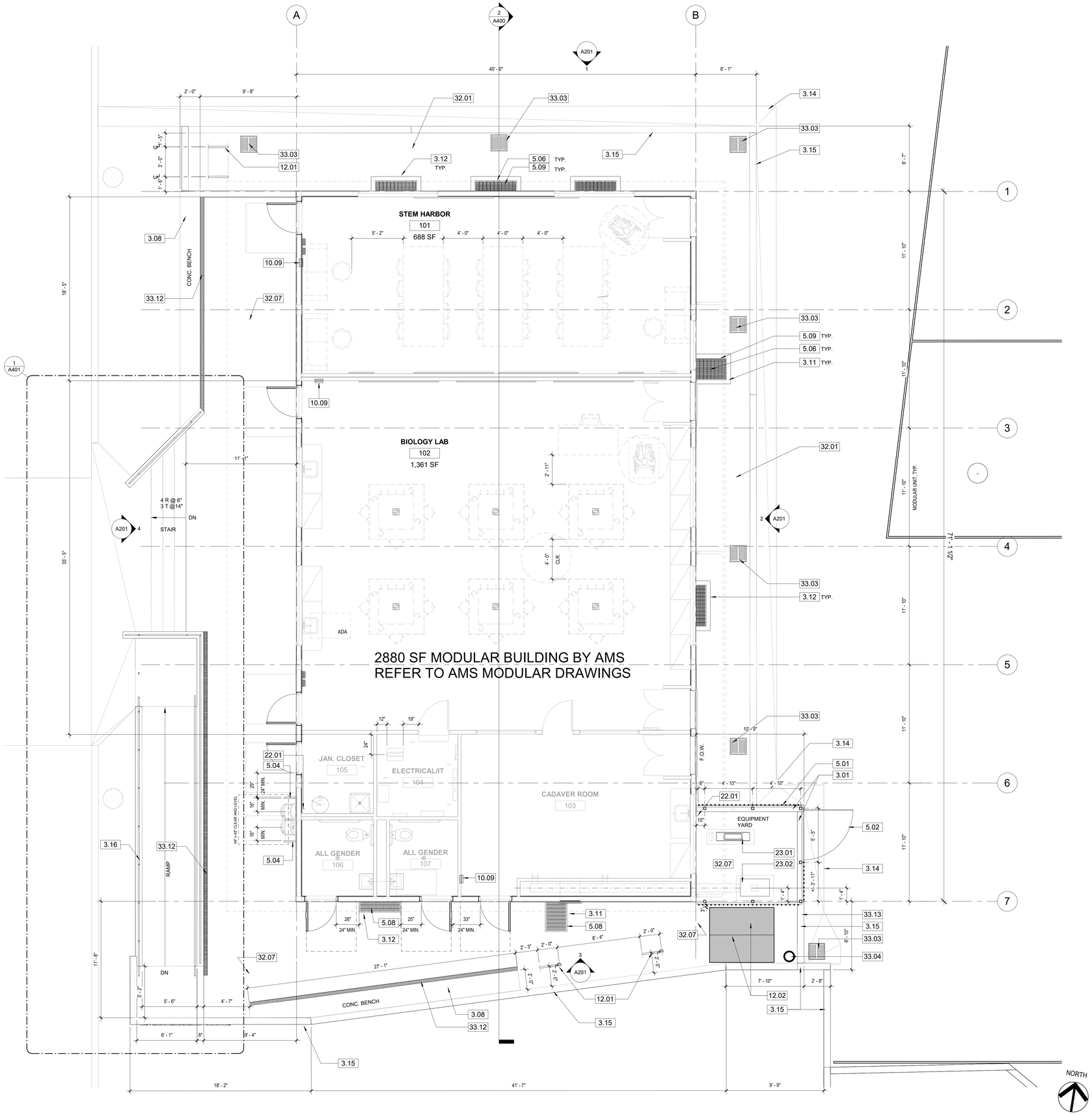

KEYNOTES

3.01	6" CONCRETE CURB
3.08	CONCRETE BENCH SEE DETAIL 7/A501
3.11	CRAWL SPACE ACCESS OPENING, WELL WALLS AND GRATE PER AMS MODULAR PC DETAIL 1/S1.5M - LOCATION MAY VARY
3.12	CRAWLS SPACE VENTILATION WELL WALLS AND GRATE PER AMS MODULAR PC DETAIL 2/S1.4M
3.14	CONCRETE V-DRAIN PER CIVIL SHEET C3.0, SEE DETAIL 14/C5.1
3.15	8" CONCRETE LANDSCAPE WALL SEE 31/S012
3.16	6" H U.O.N. CONCRETE CURB WITH RAILING SEE DETAIL 33/S012
5.01	6' HIGH STEEL PICKET FENCE, SEE DETAIL 1/A502
5.02	6' HIGH STEEL PICKET GATE, SEE DETAIL 4/A502
5.04	GUARD AT WATER FOUNTAIN PER DETAIL 14/A501
5.06	METAL GRATE, FRAME AND HARDWARE PER AMS PLANS; CONTRACTOR TO PURCHASE FROM AMS MODULAR AND INSTALL PER AMS MODULAR PC PLAN DETAILS;
5.08	WALLS AND GRATES FLUSH TO GRADE WITH ADA COMPLIANT GRATES
5.09	WALLS AND GRATES SEE CIVIL C3.0 FOR TOC AT FS
10.09	SEMI-RECESSED FIRE EXTINGUISHER CABINET - SEE DETAIL 10/A502
12.01	CYCLESAFE U/2 BIKE RACK INSTALLED IN-GROUND - REFER TO 2/A502
12.02	CYCLESAFE STANDARD MODEL SM-SO7 BIKE LOCKERS (2), MOUNT AND LEVEL PER MANUFACTURER - REFER TO 3/A502
22.01	VANDAL RESISTANT HOSE BIBB
23.01	MINI SPLIT FAN UNIT PER AMS, MOUNT PER AMS PLANS 2/M1.1A AND 20C/S9.1.
23.02	FUME JET EXHAUST FAN ON CONC SLAB PER MECH M101, STRUCT 26/S012
32.01	3" LAYER OF GRAVEL OVER FILTER FABRIC
32.07	CONCRETE PAVING PER CIVIL C3.0, DETAIL 2/C5.0, 13&14/S011 SLOPE TO DRAIN AWAY FROM BUILDING
33.03	CATCH BASIN PER CIVIL SHEET C3.0 DETAIL 6/C5.0; CONNECT TO STORM DRAIN PER CIVIL SHEET C4.0
33.04	AREA DRAIN, SEE CIVIL C3.0 AND DETAIL 9/C5.0
33.12	TRENCH DRAIN, REFER TO CIVIL C3.0, DETAIL 12/C5.1; CONNECT TO STORM DRAIN PER CIVIL C4.0
33.13	AREA DRAIN PER CIVIL DETAIL 9/C5.0

GENERAL NOTES

1. MODULAR BUILDING TO BE INSTALLED IS AS PER AMS MODULAR DRAWINGS PC DRAWING SET AND APPROVED POC DRAWINGS. ANY INFORMATION SHOWN HERE IS FOR COORDINATION PURPOSES ONLY. ALL DETAILS, SPECIFICATIONS, INTERIOR FINISHES, DOORS, WINDOWS, WALLS, SYSTEMS AND FURNISHINGS ARE AS PER AMS CONTRACT WITH OWNER AND THEREFORE NOT REPRESENTED HERE

2. THIS WORK INCLUDES ALL SITE RELATED WORK SUCH AS CURBS, SIDEWALKS, RAMPS, STAIRS, PARKING, FLATWORK, LANDSCAPING, FOUNDATIONS, DRAINAGE, UTILITIES, EQUIPMENT, FENCING AND PROPER CONNECTION TO MODULAR BUILDING.

3. ALL WORK THIS SHEET IS BY GENERAL CONTRACTOR

LEGEND

- PARTITION - SEE MODULAR CO. DRAWINGS
- CONCRETE FOUNDATION WALL PER AMS PLANS
- METAL GRATE FOR FOUNDATION VENT OR CRAWL SPACE ACCESS SEE AMS DRAWINGS. VERIFY PATH OF TRAVEL REQUIREMENTS WHERE OCCUR ON SITE PLAN
- REQUIRED LEVEL, CLEAR MANEUVERING SPACE AT DOORWAYS PER ADA/CBC
- CONCRETE CURB OR SITE WALL
- 6' HIGH STEEL PICKET FENCE, SEE DETAIL 1/A502
  6' HIGH 4' WIDE STEEL PICKET GATE , SEE DETAIL 4/A502
- LINEAR TRENCH DRAIN, SEE CIVIL
- FURNITURE NIC
- FURNITURE NIC
- FURNITURE NIC
- CASEWORK PROVIDE TALL CABINET IN AMS DRAWING A1.0

0' 2' 4' 8' 16'
SCALE: 1/4" = 1'-0"

FLOOR PLAN | 1/4" = 1'-0" | 1

IDENTIFICATION STAMP
DIV. OF THE STATE ARCHITECT
APP: 03-124589 INC:
REVIEWED FOR
SS ☑ FLS ☑ ACS ☑
DATE: 04/15/2025

VENTURA COUNTY COMMUNITY COLLEGE DISTRICT
MOORPARK OXNARD VENTURA

VENTURA COUNTY COMMUNITY COLLEGE DISTRICT
761 EAST DAILY DRIVE
CAMARILLO, CALIFORNIA 93010
TEL: (805) 652-5500

PROJECT TITLE AND SCHOOL LOCATION

VENTURA COMMUNITY COLLEGE STEM MODULAR BUILDING
VENTURA COMMUNITY COLLEGE
4667 TELEGRAPH RD.
VENTURA, CA 93003

COMMISSIONED ARCHITECT

AMADOR
amador whitta architects, inc.
28328 AGOURA RD, 203 | AGOURA HILLS CA. 91301 | 805-558-4334

CONSULTANT

STAMPS/SEALS

LICENSED ARCHITECT
WILLIAM JORGE AMADOR
C-20348
JANUARY 31, 2027
RENEWAL DATE
STATE OF CALIFORNIA

DSA V3 SUBMITTAL 03/21/2025

SHEET TITLE:

FLOOR PLAN

PROJECT NO: 22-VCCCD-08	PROJECT ARCH: WJA
DRAWN: FBG	CHECKED: WJA
SHEET NUMBER: A111	
DATE: 9/3/24	SHEET: ___ OF ___

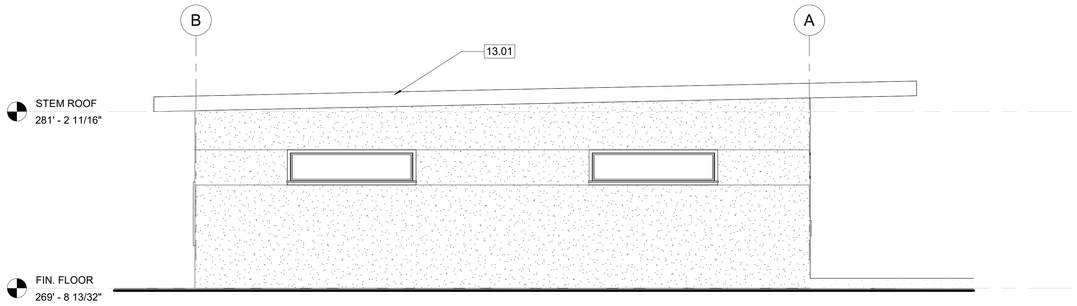

NORTH ELEVATION | 1/4" = 1'-0" | 1

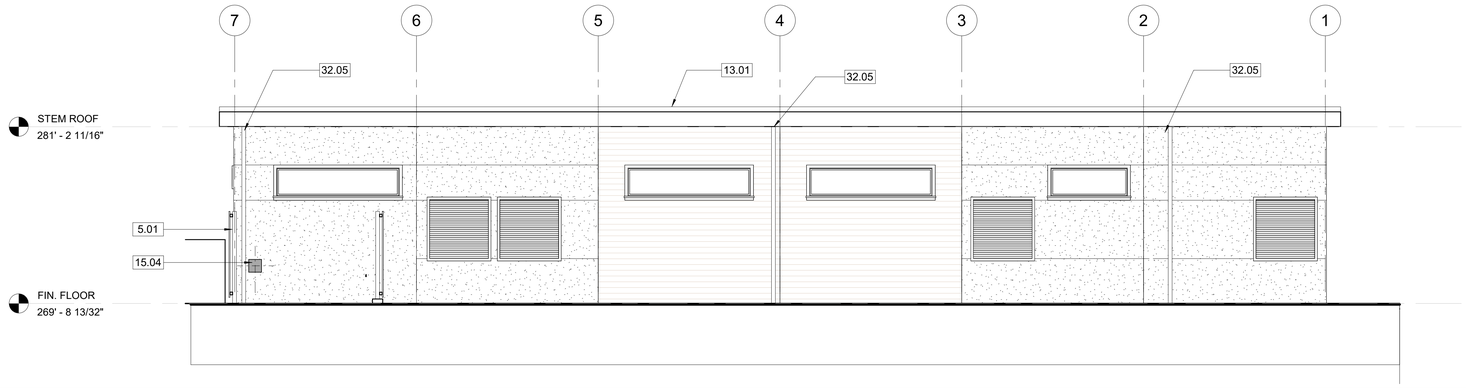

EAST ELEVATION | 1/4" = 1'-0" | 2

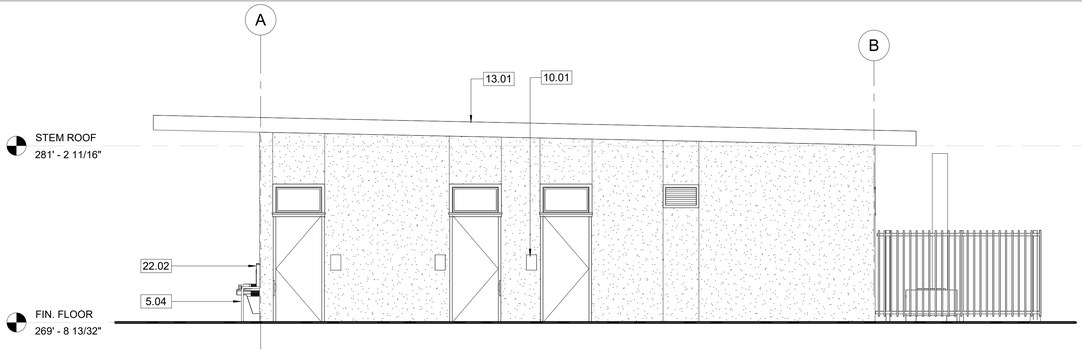

SOUTH ELEVATION | 1/4" = 1'-0" | 3

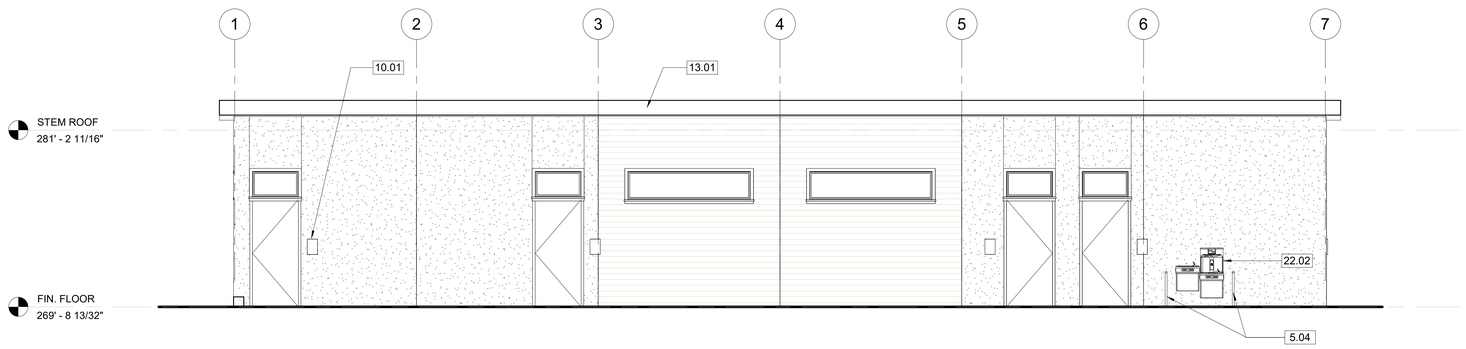

WEST ELEVATION | 1/4" = 1'-0" | 4

KEYNOTES

5.01	6' HIGH STEEL PICKET FENCE, SEE DETAIL 1/A502
5.04	GUARD AT WATER FOUNTAIN PER DETAIL 14/A501
10.01	SIGNAGE SEE SHEET A801
13.01	MODULAR BUILDING PER AMS MODULAR PLANS
15.04	SS DUCT EXITING BUILDING PER MECH M101
22.02	ADA COMPLIANT DRINKING FOUNTAIN BY AMS MODULAR
32.05	DOWNSPOUT, CONNECT TO STORM DRAIN PER CIVIL C4.0

GENERAL NOTES

1. MODULAR BUILDING TO BE INSTALLED IS AS PER AMS MODULAR DRAWINGS PC DRAWING SET AND APPROVED POC DRAWINGS. ANY INFORMATION SHOWN HERE IS FOR COORDINATION PURPOSES ONLY. ALL DETAILS, SPECIFICATIONS, INTERIOR FINISHES, DOORS, WINDOWS, WALLS, SYSTEMS AND FURNISHINGS ARE AS PER AMS CONTRACT WITH OWNER AND THEREFORE NOT REPRESENTED HERE

2. THIS WORK INCLUDES ALL SITE RELATED WORK SUCH AS CURBS, SIDEWALKS, RAMPS, STAIRS, PARKING, FLATWORK, LANDSCAPING, FOUNDATIONS, DRAINAGE, UTILITIES, EQUIPMENT, FENCING AND PROPER CONNECTION TO MODULAR BUILDING.

3. ALL WORK THIS SHEET IS BY GENERAL CONTRACTOR

LEGEND

HYBRID STUCCO

HARDIE SIDING

0' 2' 4' 8' 16'
SCALE: 1/4" = 1'-0"

IDENTIFICATION STAMP
DIV. OF THE STATE ARCHITECT
APP: 03-124589 INC:
REVIEWED FOR
SS ☑ FLS ☑ ACS ☑
DATE: 04/15/2025

VENTURA COUNTY COMMUNITY COLLEGE DISTRICT

761 EAST DAILY DRIVE
CAMARILLO, CALIFORNIA 93010
TEL: (805) 652-5500

PROJECT TITLE AND SCHOOL LOCATION

VENTURA COMMUNITY COLLEGE STEM MODULAR BUILDING
VENTURA COMMUNITY COLLEGE
4667 TELEGRAPH RD.
VENTURA, CA 93003

COMMISSIONED ARCHITECT

AMADOR

amador whittle architects, inc.
28328 AGOURA RD, 203 | AGOURA HILLS CA. 91301 | 805-558-4334

CONSULTANT

STAMPS/SEALS

LICENSED ARCHITECT
WILLIAM JORGE AMADOR
C-20348
JANUARY 31, 2027
RENEWAL DATE
STATE OF CALIFORNIA

DSA V3 SUBMITTAL 03/21/2025

SHEET TITLE:

BUILDING EXTERIOR ELEVATIONS

PROJECT NO: 22-VCCCD-08	PROJECT ARCH: Designer
DRAWN: FBG	CHECKED: Checker

SHEET NUMBER:

A201

DATE: 9/3/24 | SHEET: ___ OF ___

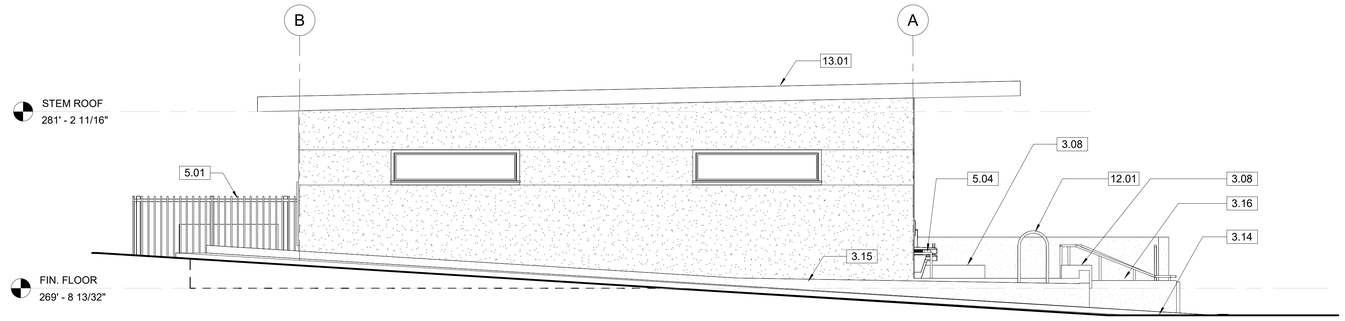

NORTH ELEVATION SITE | 1/4" = 1'-0" | 1

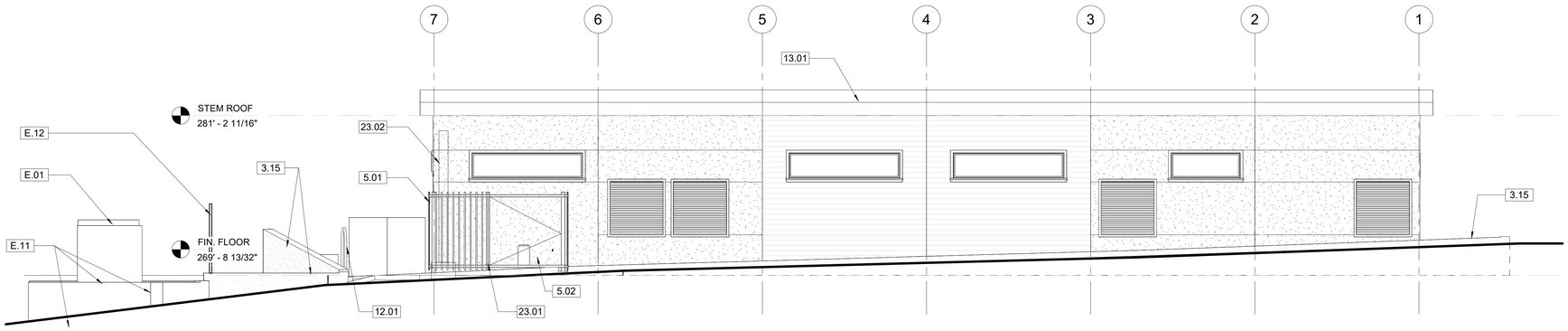

EAST ELEVATION SITE | 1/4" = 1'-0" | 2

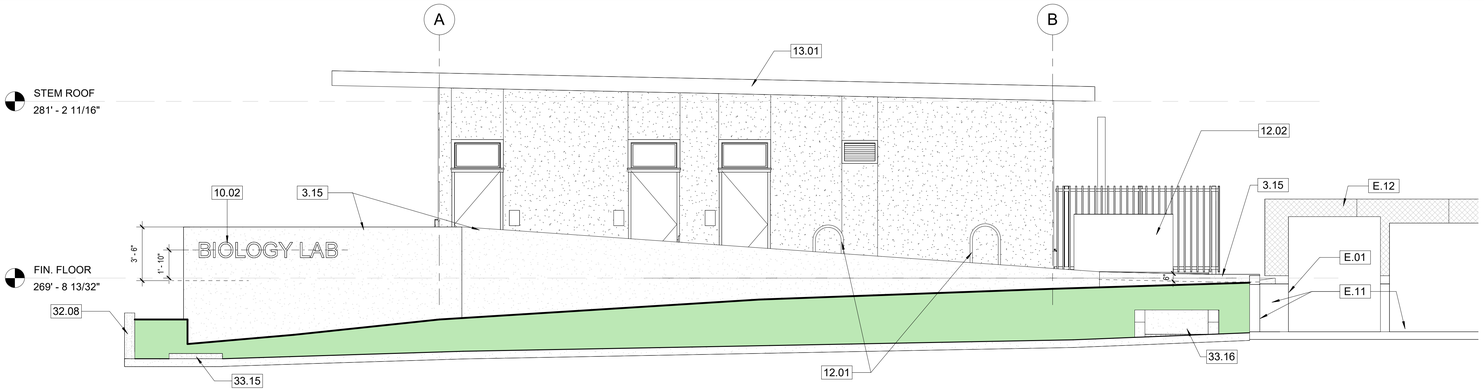

SOUTH ELEVATION SITE | 1/4" = 1'-0" | 3

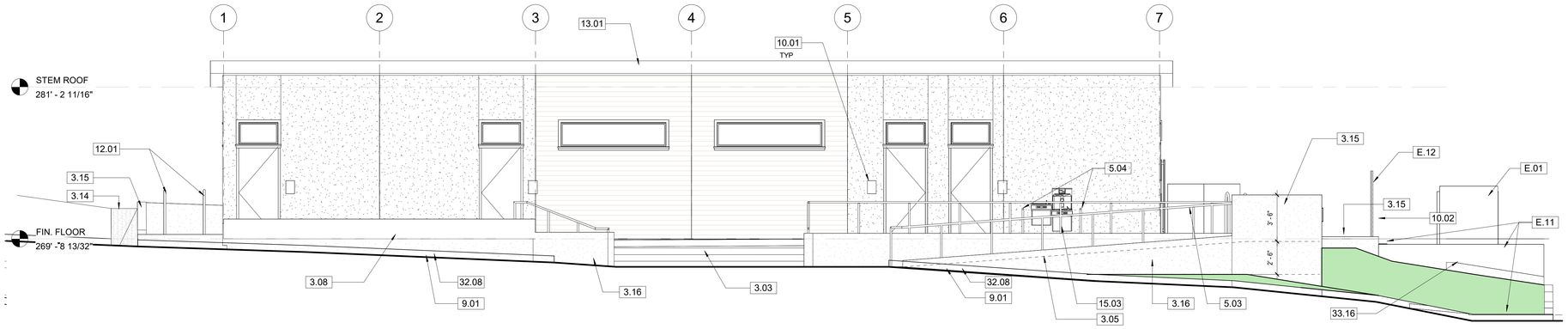

WEST ELEVATION SITE | 1/4" = 1'-0" | 4

KEYNOTES

3.03	CONCRETE STAIR ON GRADE SEE 23/S011
3.05	CONCRETE RAMP ON GRADE SEE 18/S011, 33/S012
3.08	CONCRETE BENCH SEE DETAIL 7/A501
3.14	CONCRETE V-DRAIN PER CIVIL SHEET C3.0, SEE DETAIL 14/C5.1
3.15	8" CONCRETE LANDSCAPE WALL SEE 31/S012
3.16	6" H U.O.N. CONCRETE CURB WITH RAILING SEE DETAIL 33/S012
5.01	6' HIGH STEEL PICKET FENCE, SEE DETAIL 1/A502
5.02	6' HIGH STEEL PICKET GATE, SEE DETAIL 4/A502
5.03	1.66" DIAMETER HIGH STRENGTH GALVANIZED STEEL RAILING, TYPICAL, SEE 16&17/S011 AND A501
5.04	GUARD AT WATER FOUNTAIN PER DETAIL 14/A501
9.01	FIRE LANE; PAINT CURBS BOTH SIDES RED AND STENCIL WITH "NO PARKING FIRE LANE" PER CODE
10.01	SIGNAGE SEE SHEET A801
10.02	BUILDING SIGN, 12" H X 1" ALUMINUM LETTERS, SEE DETAIL 5/A801
12.01	CYCLESAFE U/2 BIKE RACK INSTALLED IN-GROUND - REFER TO 2/A502
12.02	CYCLESAFE STANDARD MODEL SM-SO7 BIKE LOCKERS (2), MOUNT AND LEVEL PER MANUFACTURER - REFER TO 3/A502
13.01	MODULAR BUILDING PER AMS MODULAR PLANS
15.03	ADA COMPLIANT DRINKING FOUNTAIN BY AMS MODULAR
23.01	MINI SPLIT FAN UNIT PER AMS, MOUNT PER AMS PLANS 2/M1.1A AND 20C/S9.1.
23.02	FUME JET EXHAUST FAN ON CONC SLAB PER MECH M101, STRUCT 26/S012
32.08	CONCRETE CURB PER CIVIL SHEET C3.0 DETAIL 11/C5.0 OR 15/C5.1
33.15	BACKFLOW DEVICE PER CIVIL SHEET C4.1, DETAIL 13/C5.1
33.16	PARKWAY DRAIN PER CIVIL SHEET C4.0, DETAIL 16/C5.1
E.01	(E) TRANSFORMERS
E.11	(E) RETAINING WALLS AND SLAB
E.12	(E) CHAIN LINK FENCE TO REMAIN

GENERAL NOTES

1. MODULAR BUILDING TO BE INSTALLED IS AS PER AMS MODULAR DRAWINGS PC DRAWING SET AND APPROVED POC DRAWINGS. ANY INFORMATION SHOWN HERE IS FOR COORDINATION PURPOSES ONLY. ALL DETAILS, SPECIFICATIONS, INTERIOR FINISHES, DOORS, WINDOWS, WALLS, SYSTEMS AND FURNISHINGS ARE AS PER AMS CONTRACT WITH OWNER AND THEREFORE NOT REPRESENTED HERE

2. THIS WORK INCLUDES ALL SITE RELATED WORK SUCH AS CURBS, SIDEWALKS, RAMPS, STAIRS, PARKING, FLATWORK, LANDSCAPING, FOUNDATIONS, DRAINAGE, UTILITIES, EQUIPMENT, FENCING AND PROPER CONNECTION TO MODULAR BUILDING.

3. ALL WORK THIS SHEET IS BY GENERAL CONTRACTOR

LEGEND

HYBRID STUCCO

HARDIE SIDING

0' 2' 4' 8' 16'
SCALE: 1/4" = 1'-0"

IDENTIFICATION STAMP
DIV. OF THE STATE ARCHITECT
APP: 03-124589 INC:
REVIEWED FOR
SS ☑ FLS ☑ ACS ☑
DATE: 04/15/2025

VENTURA COUNTY COMMUNITY COLLEGE DISTRICT
MOORPARK OXNARD VENTURA

VENTURA COUNTY COMMUNITY COLLEGE DISTRICT

761 EAST DAILY DRIVE
CAMARILLO, CALIFORNIA 93010
TEL: (805) 652-5500

PROJECT TITLE AND SCHOOL LOCATION

VENTURA COMMUNITY COLLEGE STEM MODULAR BUILDING

VENTURA COMMUNITY COLLEGE
4667 TELEGRAPH RD.
VENTURA, CA 93003

COMMISSIONED ARCHITECT

AMADOR

amador whittle architects, inc.
28328 AGOURA RD, 203 | AGOURA HILLS CA, 91301 | 805-558-4334

CONSULTANT

STAMPS/SEALS

LICENSED ARCHITECT
WILLIAM JORGE AMADOR
C-20348
JANUARY 31, 2027
RENEWAL DATE
STATE OF CALIFORNIA

△	
△	
△	
△	DSA V3 SUBMITTAL 03/21/2025

SHEET TITLE:

SITE EXTERIOR ELEVATIONS

PROJECT NO: 22-VCCCD-08	PROJECT ARCH: Designer
DRAWN: FBG	CHECKED: Checker
SHEET NUMBER: A202	
DATE: 9/3/24	SHEET: ___ OF ___

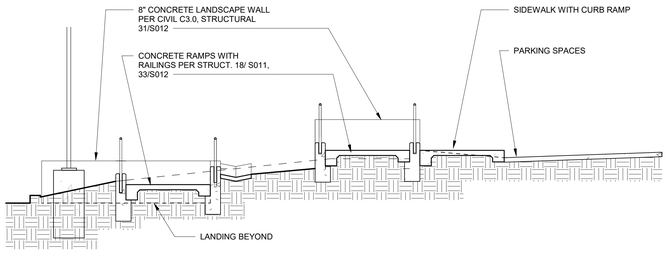

SITE SECTION AT RAMP AND PARKING | 1/4" = 1'-0" | 3

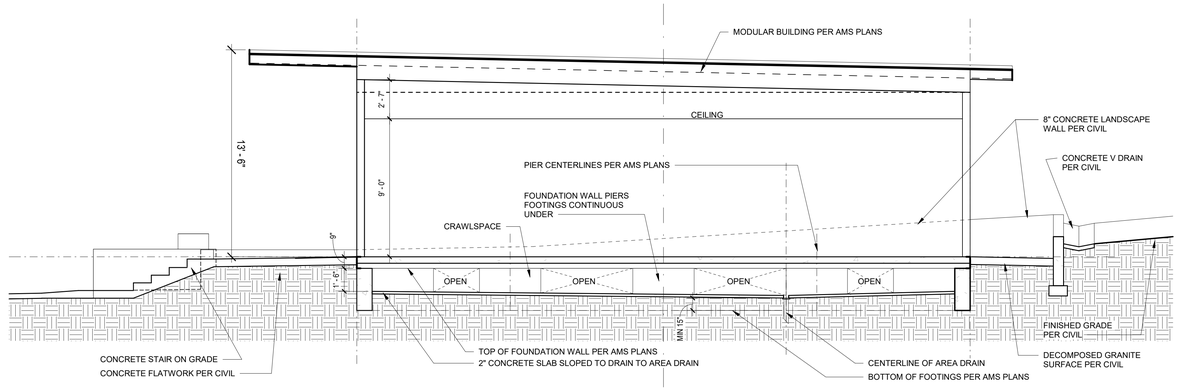

E/W SITE / BUILDING SECTION | 1/4" = 1'-0" | 1

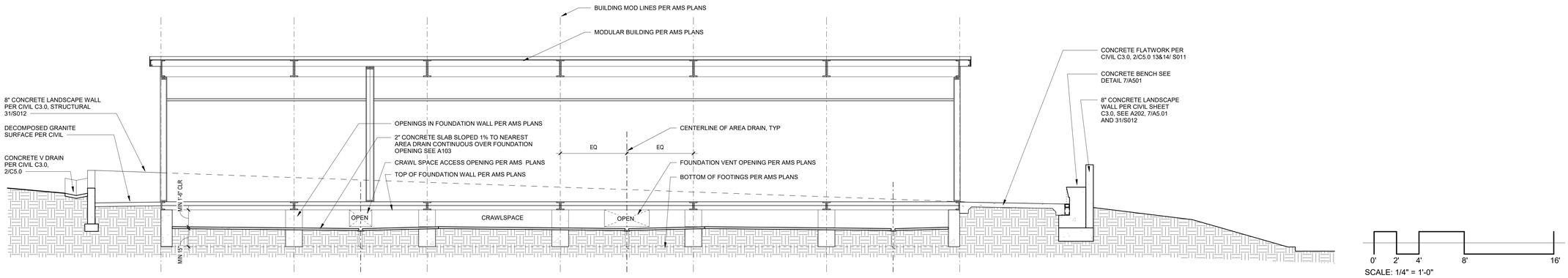

N/S SITE / BUILDING SECTION | 1/4" = 1'-0" | 2

IDENTIFICATION STAMP
DIV. OF THE STATE ARCHITECT
APP: 03-124589 INC:
REVIEWED FOR
SS ☑ FLS ☑ ACS ☑
DATE: 04/15/2025

VENTURA COUNTY COMMUNITY COLLEGE DISTRICT

761 EAST DAILY DRIVE
CAMARILLO, CALIFORNIA 93010
TEL: (805) 652-5500

PROJECT TITLE AND SCHOOL LOCATION

VENTURA COMMUNITY COLLEGE STEM MODULAR BUILDING

VENTURA COMMUNITY COLLEGE
4667 TELEGRAPH RD.
VENTURA, CA 93003

COMMISSIONED ARCHITECT

AMADOR

amador whittle architects, inc.
28328 AGOURA RD, 203 | AGOURA HILLS CA, 91301 | 805-558-4334

CONSULTANT

STAMPS/SEALS

LICENSED ARCHITECT
WILLIAM JORGE AMADOR
C-20348
JANUARY 31, 2027
RENEWAL DATE
STATE OF CALIFORNIA

DSA V3 SUBMITTAL 03/21/2025

SHEET TITLE:

SITE, BUILDING SECTIONS

PROJECT NO: 22-VCCCD-08	PROJECT ARCH: Designer
DRAWN: Author	CHECKED: Checker

SHEET NUMBER:

A400

DATE: 9/3/24 | SHEET: ___ OF ___

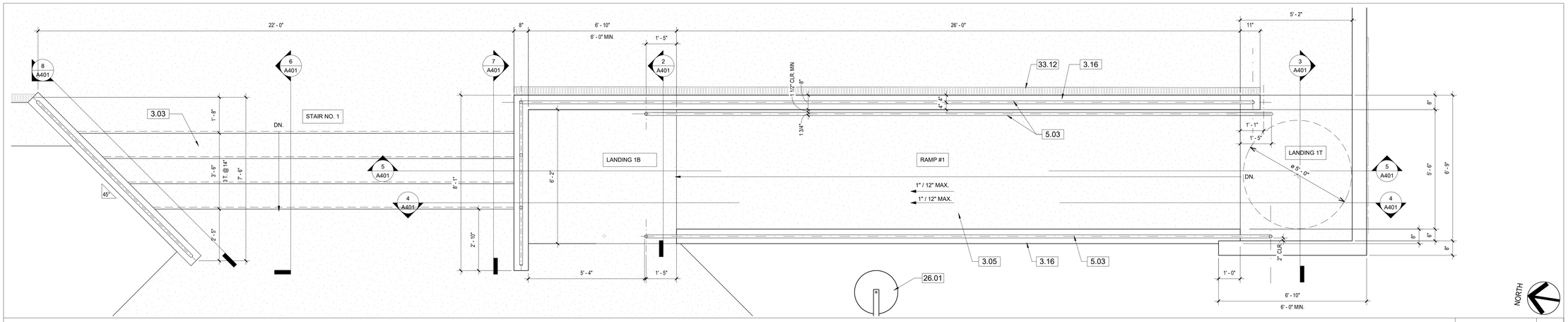

RAMP NO. 1 PLAN | 1/2" = 1'-0" | 1

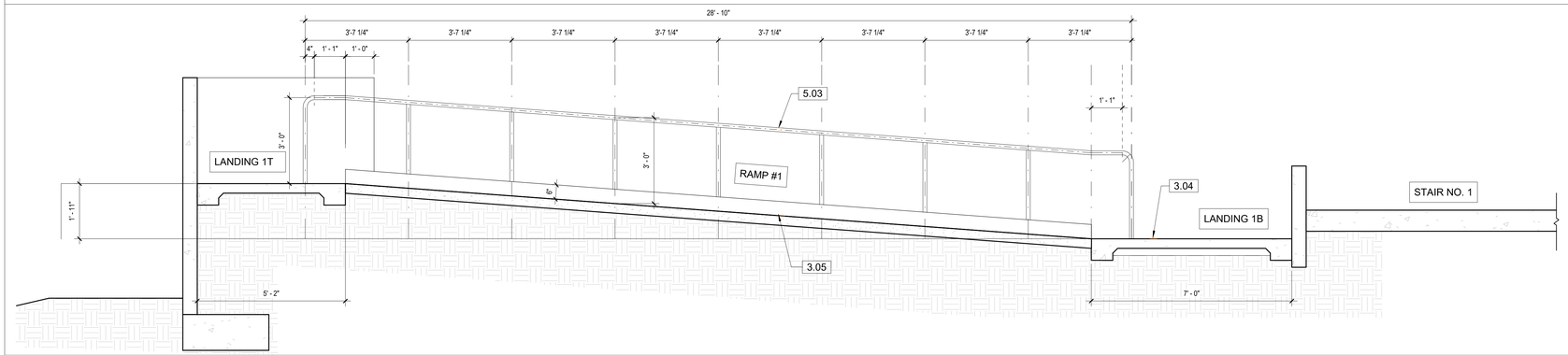

SECTION THRU RAMP NO. 1 FACING WEST | 1/2" = 1'-0" | 4

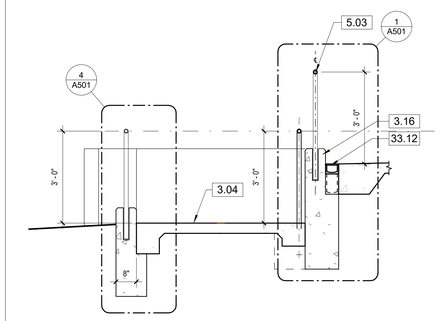

SECTION THRU LANDING 1B | 1/2" = 1'-0" | 2

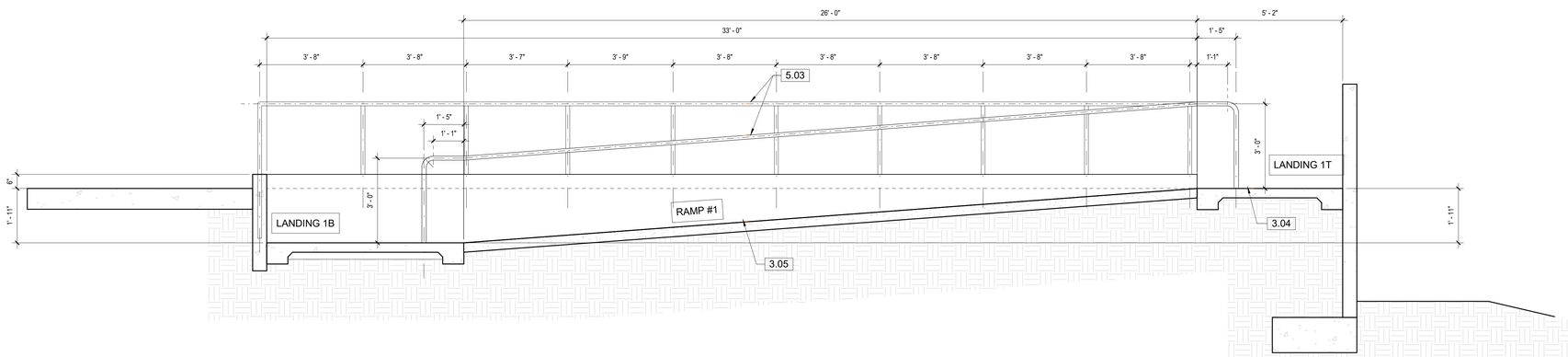

SECTION THRU RAMP NO. 1 FACING EAST | 1/2" = 1'-0" | 5

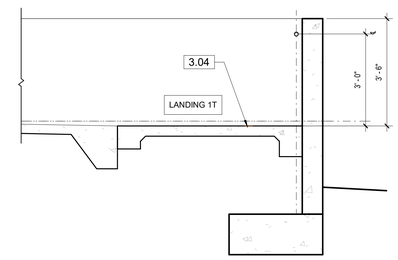

SECTION LANDING 1T VIEW SOUTH | 1/2" = 1'-0" | 3

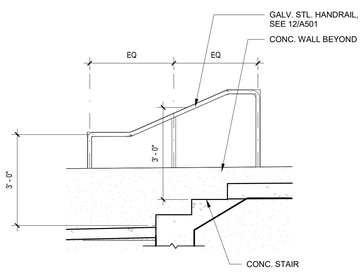

SECTION THRU STAIR NO. 2 | 1/2" = 1'-0" | 9

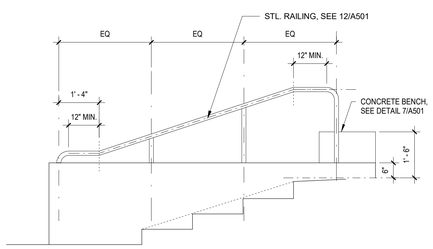

NORTH WALL ELEV. @ STAIR NO. 1 | 1/2" = 1'-0" | 8

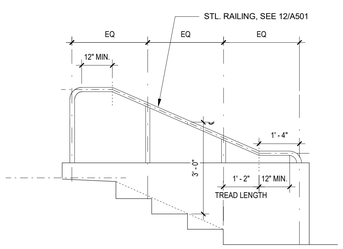

SOUTH WALL ELEV. @ STAIR NO. 1 | 1/2" = 1'-0" | 7

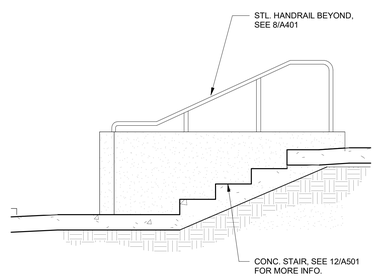

SECTION THRU STAIR NO. 1 | 1/2" = 1'-0" | 6

KEYNOTES

3.03	CONCRETE STAIR ON GRADE SEE 23/S011
3.04	CONCRETE LANDING ON GRADE
3.05	CONCRETE RAMP ON GRADE SEE 18/S011, 33/S012
3.16	6" H U.O.N. CONCRETE CURB WITH RAILING SEE DETAIL 33/S012
5.03	1.66" DIAMETER HIGH STRENGTH GALVANIZED STEEL RAILING, TYPICAL, SEE 16&17/S011 AND A501
26.01	(N) LOCATION FOR RELOCATED (E)LIGHT STANDARD SEE 2/E604
33.12	TRENCH DRAIN, REFER TO CIVIL C3.0, DETAIL 12/C5.1; CONNECT TO STORM DRAIN PER CIVIL C4.0

0" 1" 2" 4" 8"
SCALE: 1/2" = 1'-0"

IDENTIFICATION STAMP
DIV. OF THE STATE ARCHITECT
APP: 03-124589 INC:
REVIEWED FOR
SS ☑ FLS ☑ ACS ☑
DATE: 04/15/2025

VENTURA COUNTY COMMUNITY COLLEGE DISTRICT
761 EAST DAILY DRIVE
CAMARILLO, CALIFORNIA 93010
TEL: (805) 652-5500

PROJECT TITLE AND SCHOOL LOCATION

VENTURA COMMUNITY COLLEGE STEM MODULAR BUILDING
VENTURA COMMUNITY COLLEGE
4667 TELEGRAPH RD.
VENTURA, CA 93003

COMMISSIONED ARCHITECT

AMADOR
amador whittle architects, inc.
28328 AGOURA RD, 203 | AGOURA HILLS CA. 91301 | 805-558-4334

CONSULTANT

STAMPS/SEALS

LICENSED ARCHITECT WILLIAM JORGE AMADOR C-20348 JANUARY 31, 2027 RENEWAL DATE STATE OF CALIFORNIA

DSA V3 SUBMITTAL 03/21/2025

SHEET TITLE:

STAIR #1 & RAMP #1
PLAN AND SECTIONS

PROJECT NO: 22-VCCCD-08 | PROJECT ARCH: Designer
DRAWN: Author | CHECKED: Checker
SHEET NUMBER:
A401
DATE: 9/3/24 | SHEET: ___ OF ___

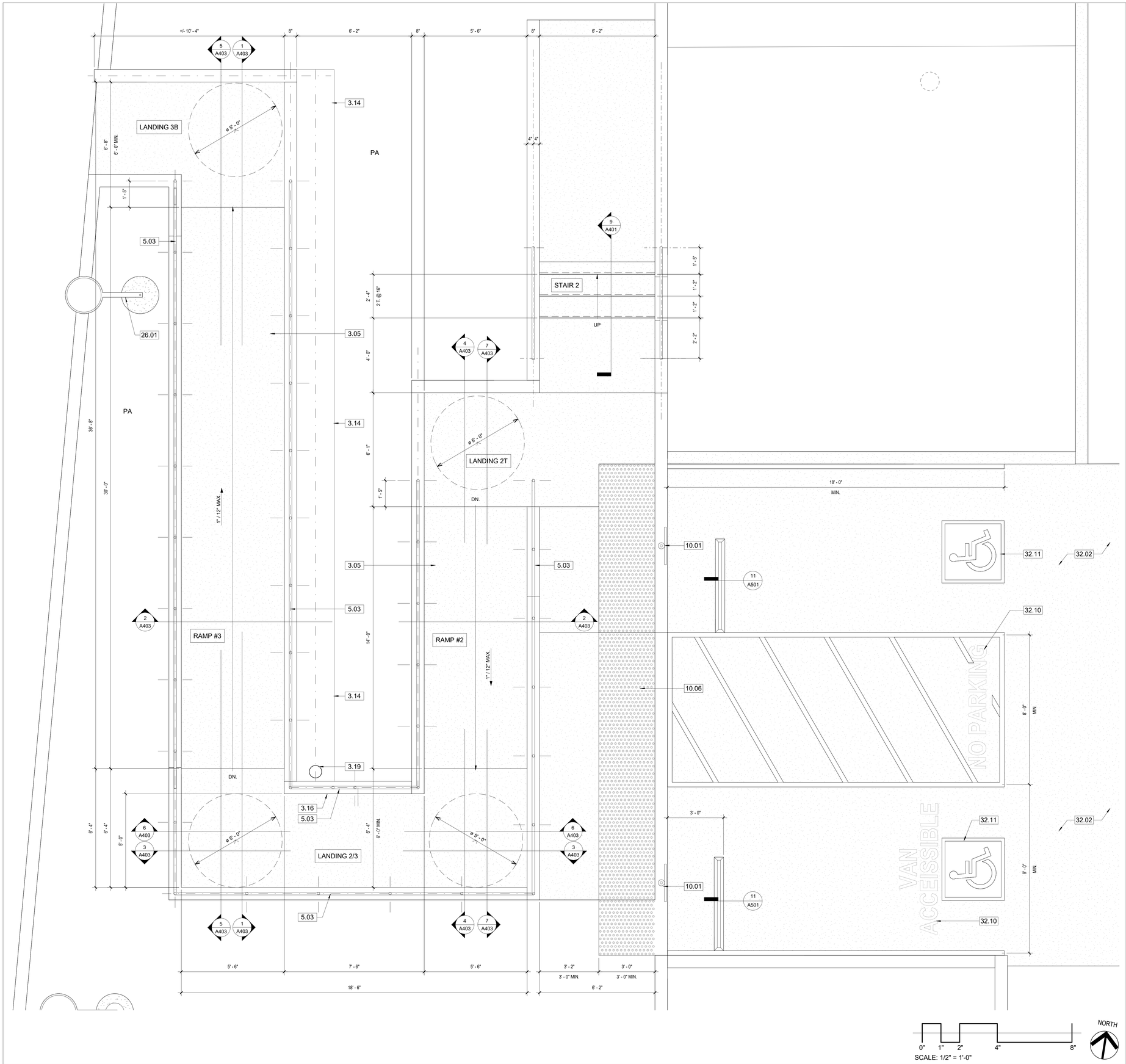

KEYNOTES

3.05	CONCRETE RAMP ON GRADE SEE 18/S011, 33/S012
3.14	CONCRETE V-DRAIN PER CIVIL SHEET C3.0, SEE DETAIL 14/C5.1
3.16	6" H U.O.N. CONCRETE CURB WITH RAILING SEE DETAIL 33/S012
3.19	PLANTER DRAIN, SEE DETAIL 10/C5.0
5.03	1.66" DIAMETER HIGH STRENGTH GALVANIZED STEEL RAILING, TYPICAL, SEE 16&17/S011 AND A501
10.01	SIGNAGE SEE SHEET A801
10.06	RECESSED TACTILE WARNING SURFACE MAT - SEE DETAIL 10/A501
26.01	(N) LOCATION FOR RELOCATED (E)LIGHT STANDARD SEE 2/E604
32.02	ASPHALT PAVING PER CIVIL SHEET C 3.0 DETAIL 1/C5.0
32.10	12" HIGH PAINTED TEXT; COLOR WHITE
32.11	I.S.A. PARKING STALL SYMBOL, SEE DETAIL 5/A802

NOTES

1. ALL DIMENSIONS TO PAINTED STRIPING ARE TAKEN FROM CENTERLINE OF STRIPE UNLESS NOTED OTHERWISE.
2. STRIPING TO BE 4" WIDE PAINTED BLUE.
3. BORDER STRIPING SHALL BE 4" WIDE PAINTED BLUE.

ENLARGED SITE AND PARKING PLAN | 1/2" = 1'-0" | 1

IDENTIFICATION STAMP
DIV. OF THE STATE ARCHITECT
APP: 03-124589 INC:
REVIEWED FOR
SS ☑ FLS ☑ ACS ☑
DATE: 04/15/2025

VENTURA COUNTY COMMUNITY COLLEGE DISTRICT

761 EAST DAILY DRIVE
CAMARILLO, CALIFORNIA 93010
TEL: (805) 652-5500

PROJECT TITLE AND SCHOOL LOCATION

VENTURA COMMUNITY COLLEGE STEM MODULAR BUILDING

VENTURA COMMUNITY COLLEGE
4667 TELEGRAPH RD.
VENTURA, CA 93003

COMMISSIONED ARCHITECT

AMADOR

amador whittle architects, inc.
28328 AGOURA RD. 203 | AGOURA HILLS CA, 91301 | 805-558-4334

CONSULTANT

STAMPS/SEALS

LICENSED ARCHITECT
WILLIAM JORGE AMADOR
C-20348
JANUARY 31, 2027
RENEWAL DATE
STATE OF CALIFORNIA

DSA V3 SUBMITTAL 03/21/2025

SHEET TITLE:

ENLARGED SITE PLAN, PARKING PLAN

PROJECT NO: 22-VCCCD-08	PROJECT ARCH: Designer
DRAWN: Author	CHECKED: Checker

SHEET NUMBER:

A402

DATE: 9/3/24 | SHEET: ___ OF ___

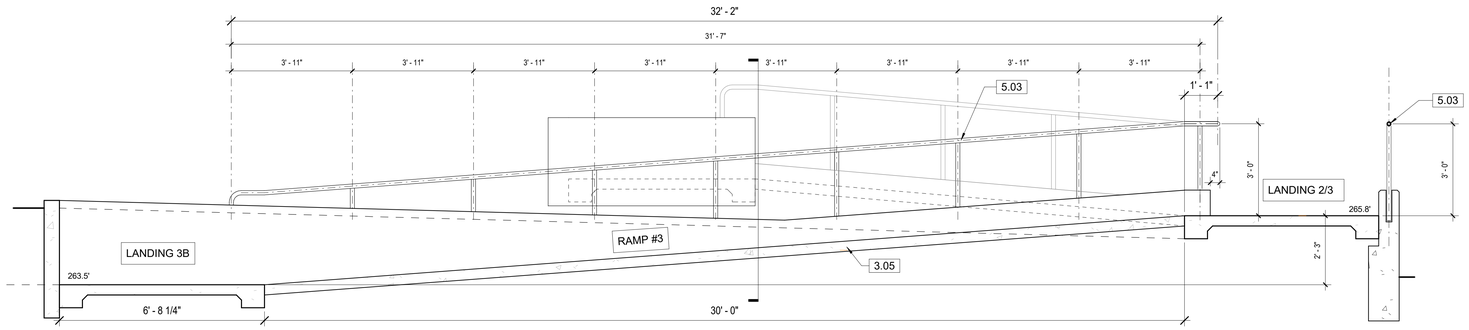

RAMP 3 SECTION LOOKING EAST | 1/2" = 1'-0" | 1

KEYNOTES

3.04	CONCRETE LANDING ON GRADE
3.05	CONCRETE RAMP ON GRADE SEE 18/S011, 33/S012
3.14	CONCRETE V-DRAIN PER CIVIL SHEET C3.0, SEE DETAIL 14/C5.1
3.16	6" H U.O.N. CONCRETE CURB WITH RAILING SEE DETAIL 33/S012
5.03	1.66" DIAMETER HIGH STRENGTH GALVANIZED STEEL RAILING, TYPICAL, SEE 16&17/S011 AND A501
26.01	(N) LOCATION FOR RELOCATED (E)LIGHT STANDARD SEE 2/E604

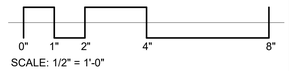

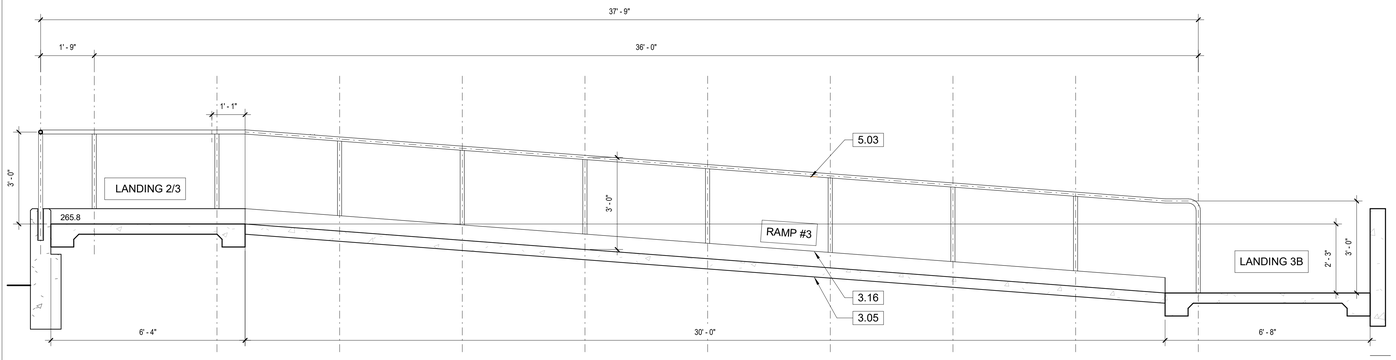

RAMP 3 SECTION LOOKING WEST | 1/2" = 1'-0" | 5

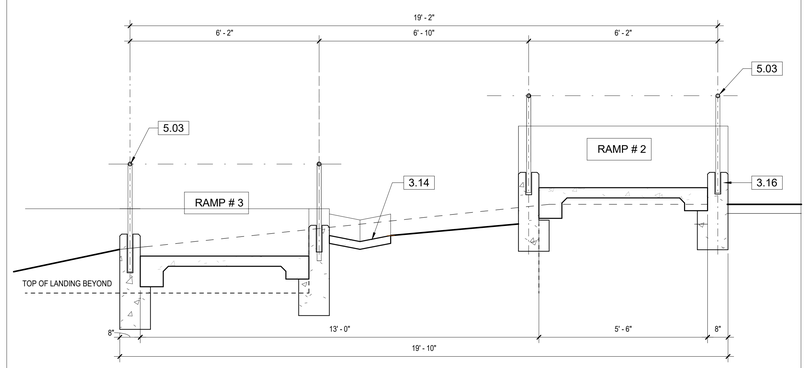

SECTION RAMP 2 & 3 | 1/2" = 1'-0" | 2

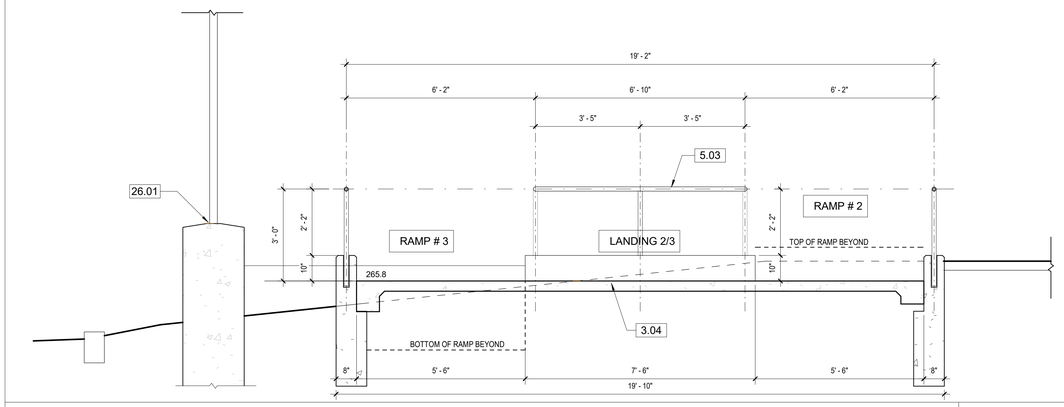

LANDING 2/3 SECTION FACING NORTH | 1/2" = 1'-0" | 6

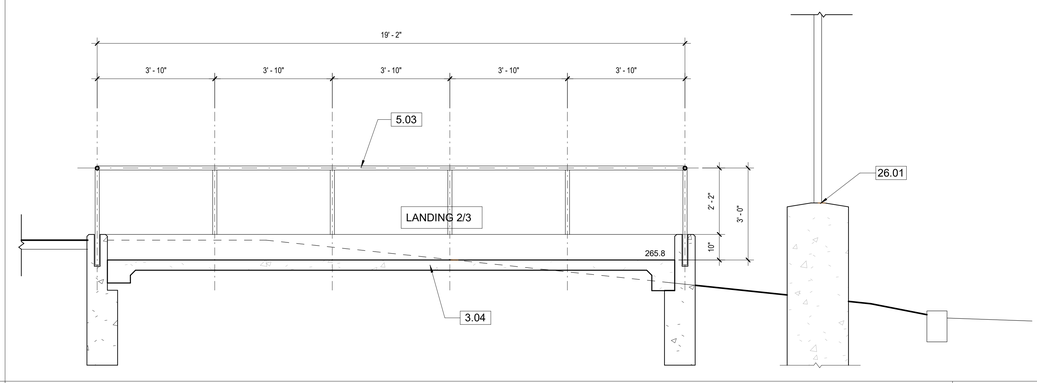

LANDING 2/3 SECTION FACING SOUTH | 1/2" = 1'-0" | 3

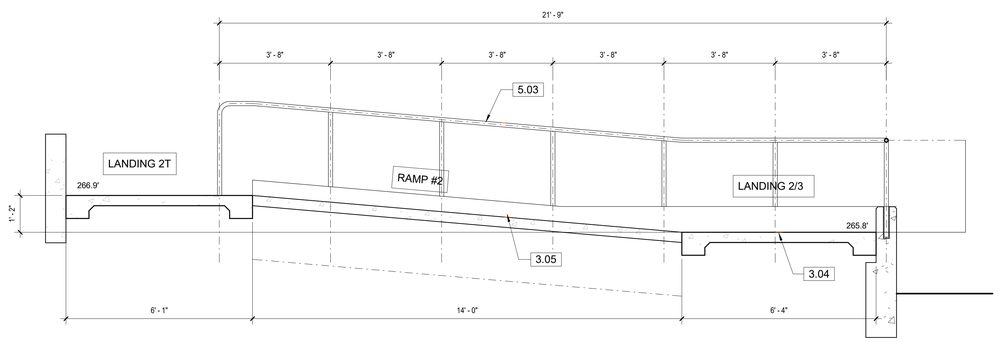

RAMP 2 SECTION LOOKING EAST | 1/2" = 1'-0" | 7

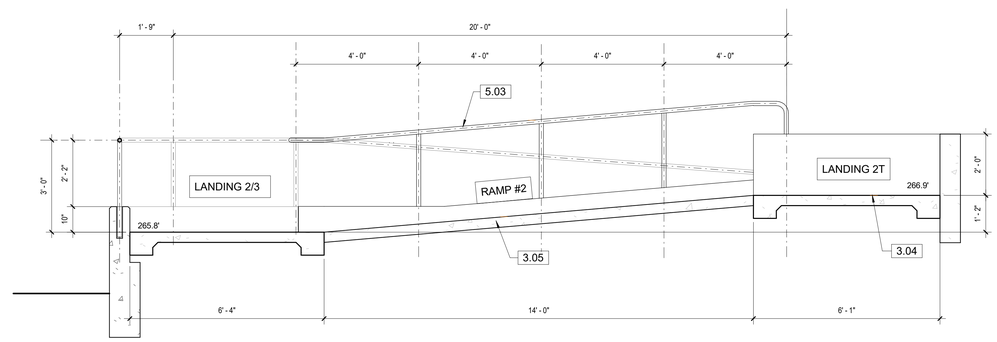

RAMP 2 SECTION LOOKING WEST | 1/2" = 1'-0" | 4

IDENTIFICATION STAMP
DIV. OF THE STATE ARCHITECT
APP: 03-124589 INC:
REVIEWED FOR
SS ☑ FLS ☑ ACS ☑
DATE: 04/15/2025

VENTURA COUNTY COMMUNITY COLLEGE DISTRICT
761 EAST DAILY DRIVE
CAMARILLO, CALIFORNIA 93010
TEL: (805) 652-5500

PROJECT TITLE AND SCHOOL LOCATION

VENTURA COMMUNITY COLLEGE STEM MODULAR BUILDING
VENTURA COMMUNITY COLLEGE
4667 TELEGRAPH RD.
VENTURA, CA 93003

COMMISSIONED ARCHITECT

AMADOR
amador whittle architects, inc.
28328 AGOURA RD, 203 | AGOURA HILLS CA. 91301 | 805-558-4334

CONSULTANT

STAMPS/SEALS

LICENSED ARCHITECT
WILLIAM JORGE AMADOR
C-20348
JANUARY 31, 2027
RENEWAL DATE
STATE OF CALIFORNIA

DSA V3 SUBMITTAL 03/21/2025

SHEET TITLE:

RAMP & STAIR SECTIONS

PROJECT NO: 22-VCCCD-08
PROJECT ARCH: Designer
DRAWN: Author
CHECKED: Checker
SHEET NUMBER:

A403

DATE: 9/3/24
SHEET: ___ OF ___

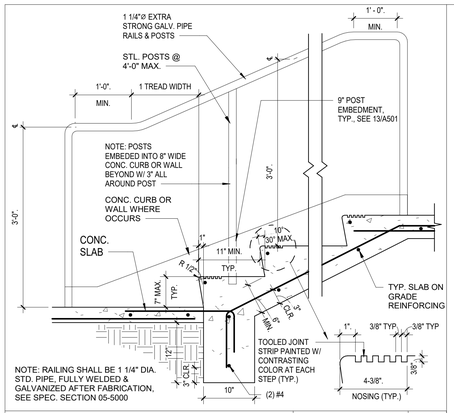

TYP. EXTERIOR STAIR SECTION | 1" = 1'-0" | 12

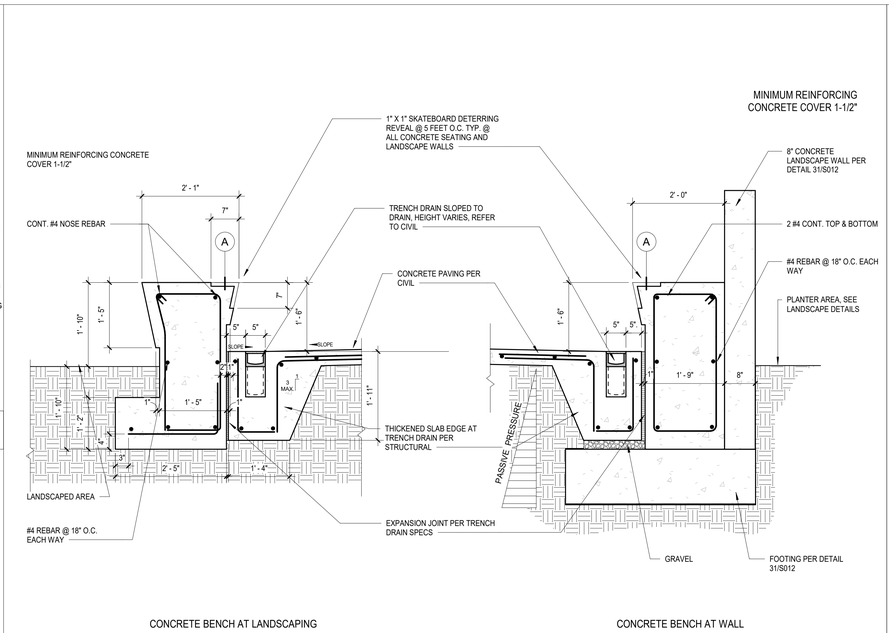

CONCRETE BENCH | 3/4" = 1'-0" | 7

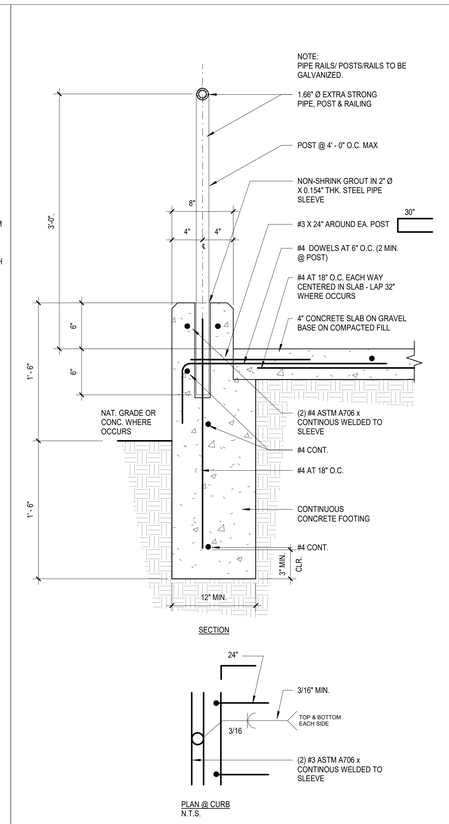

TYPICAL HANDRAIL AT CURB | 1 1/2" = 1'-0" | 4

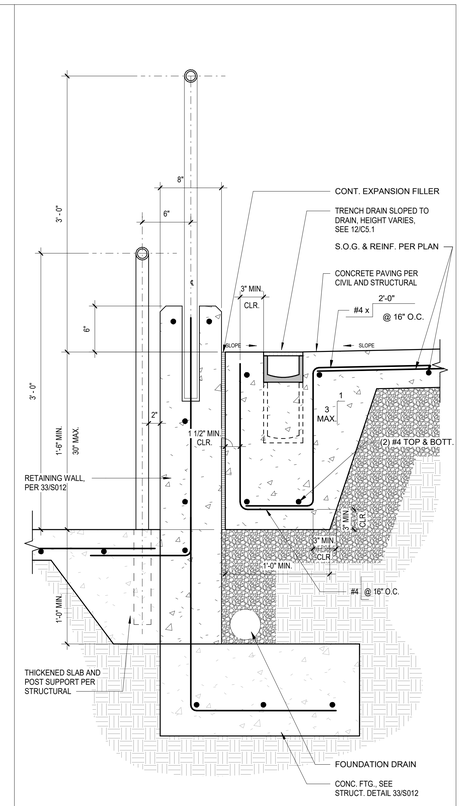

RAILING WALL AT LEVEL CHANGE | 1 1/2" = 1'-0" | 1

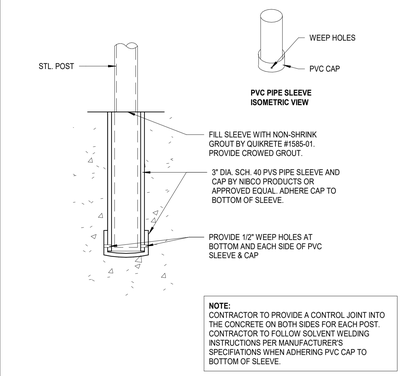

TYP. POST EMBED | 3" = 1'-0" | 13

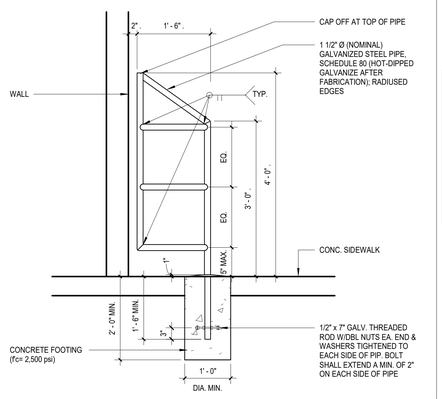

DRINKING FOUNTAIN WING GUARD | 3/4" = 1'-0" | 14

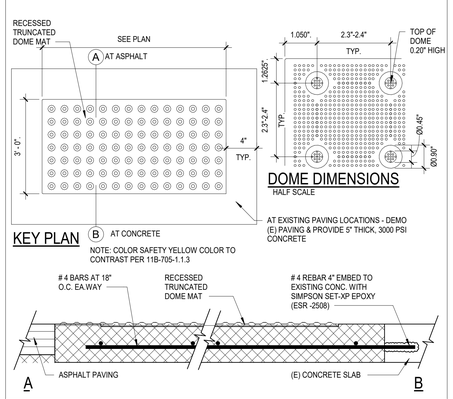

TACTILE WARNING SURFACE MAT | 1 1/2" = 1'-0" | 10

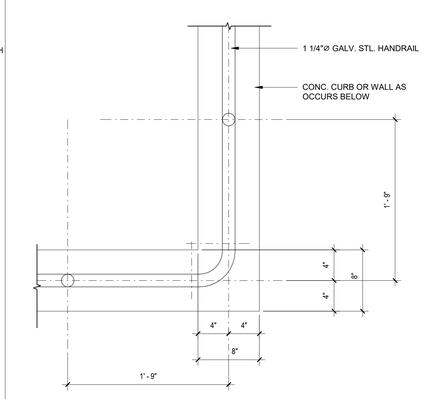

RAILING CORNER AT RAMP | 1 1/2" = 1'-0" | 8

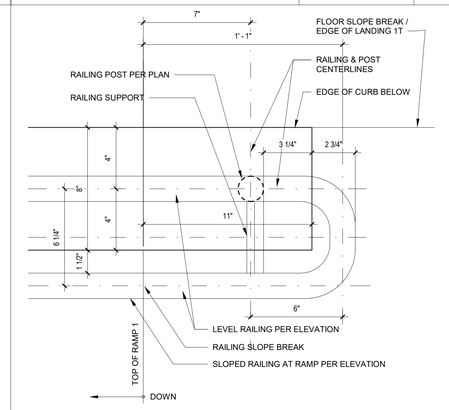

RAILING TRANSITION AT RAMP 1 | 3" = 1'-0" | 5

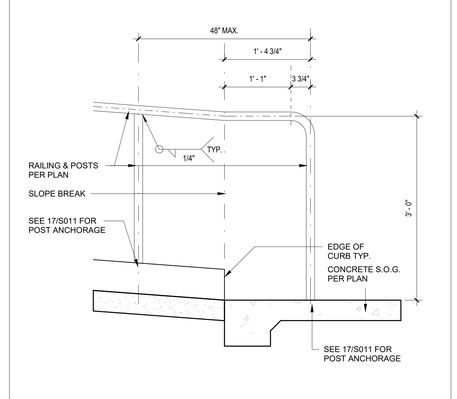

HANDRAIL DETAIL | 1" = 1'-0" | 2

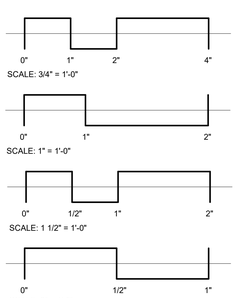

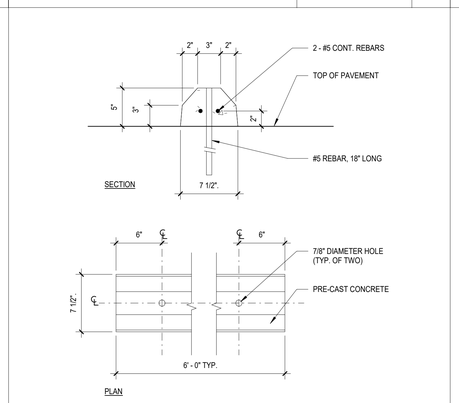

CONCRETE WHEEL STOP | 1 1/2" = 1'-0" | 11

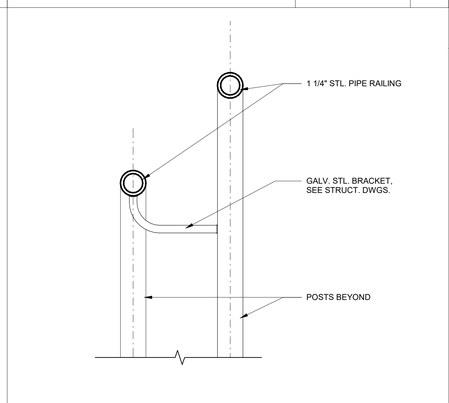

RAIL SUPPORT AT OFFSET POST | 3" = 1'-0" | 9

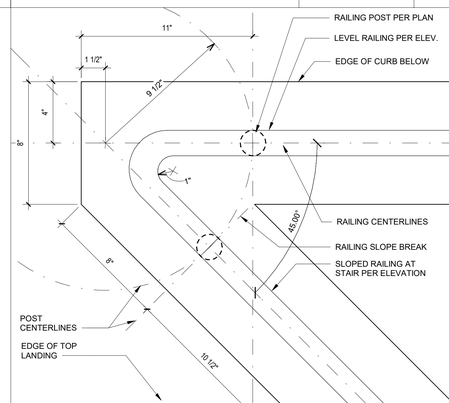

RAILING TRANSITION AT STAIR 1 | 3" = 1'-0" | 6

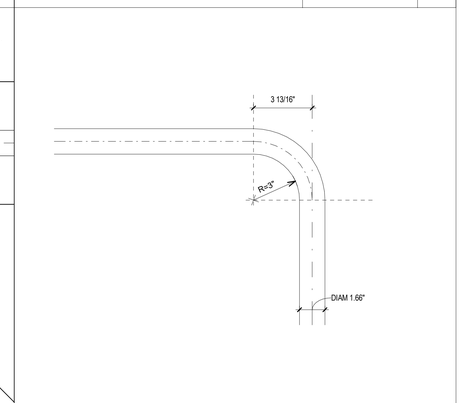

RAILING AT END POST | 3" = 1'-0" | 3

IDENTIFICATION STAMP
DIV. OF THE STATE ARCHITECT
APP: 03-124589 INC:
REVIEWED FOR
SS ☑ FLS ☑ ACS ☑
DATE: 04/15/2025

VENTURA COUNTY COMMUNITY COLLEGE DISTRICT
761 EAST DAILY DRIVE
CAMARILLO, CALIFORNIA 93010
TEL: (805) 652-5500

PROJECT TITLE AND SCHOOL LOCATION

VENTURA COMMUNITY COLLEGE STEM MODULAR BUILDING
VENTURA COMMUNITY COLLEGE
4667 TELEGRAPH RD.
VENTURA, CA 93003

COMMISSIONED ARCHITECT

AMADOR

amador whittle architects, inc.
28328 AGOURA RD, 203 | AGOURA HILLS CA. 91301 | 805-558-4334

CONSULTANT

STAMPS/SEALS

LICENSED ARCHITECT WILLIAM JORGE AMADOR C-20348 JANUARY 31, 2027 RENEWAL DATE STATE OF CALIFORNIA

DSA V3 SUBMITTAL 03/21/2025

SHEET TITLE:

SITE DETAILS

PROJECT NO: 22-VCCCD-08	PROJECT ARCH: Designer
DRAWN: Author	CHECKED: Checker
SHEET NUMBER: A501	
DATE: 9/3/24	SHEET: ___ OF ___

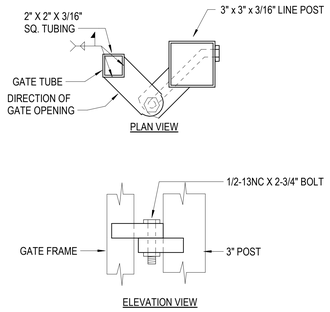

GATE HINGE DETAIL | 3" = 1'-0" | 7

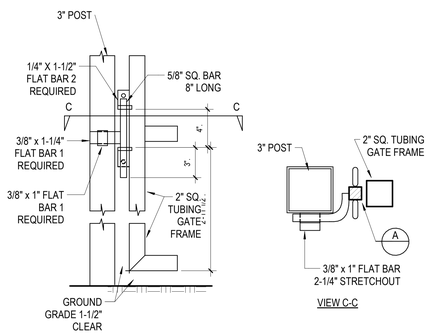

WALK GATE LATCH DETAIL | 3" = 1'-0" | 8

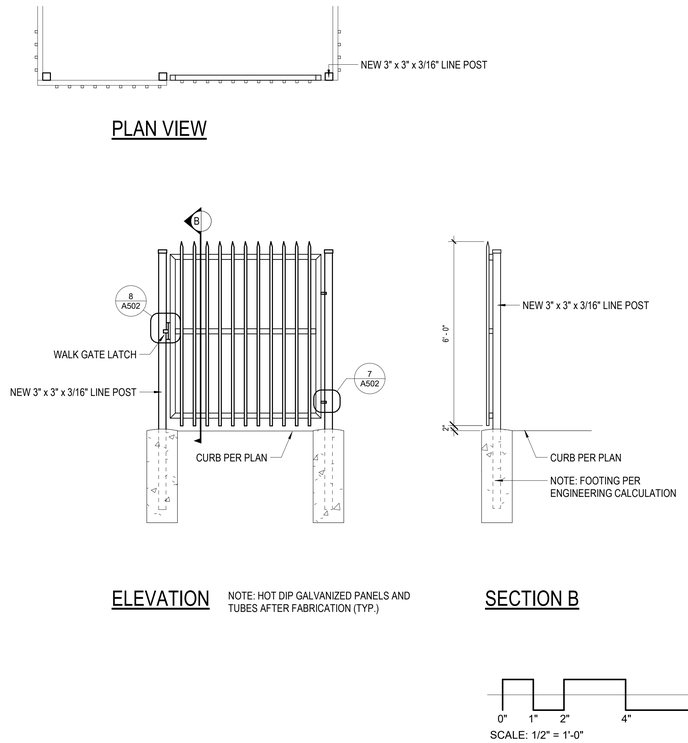

5' WIDE WALK GATE | 1/2" = 1'-0" | 4

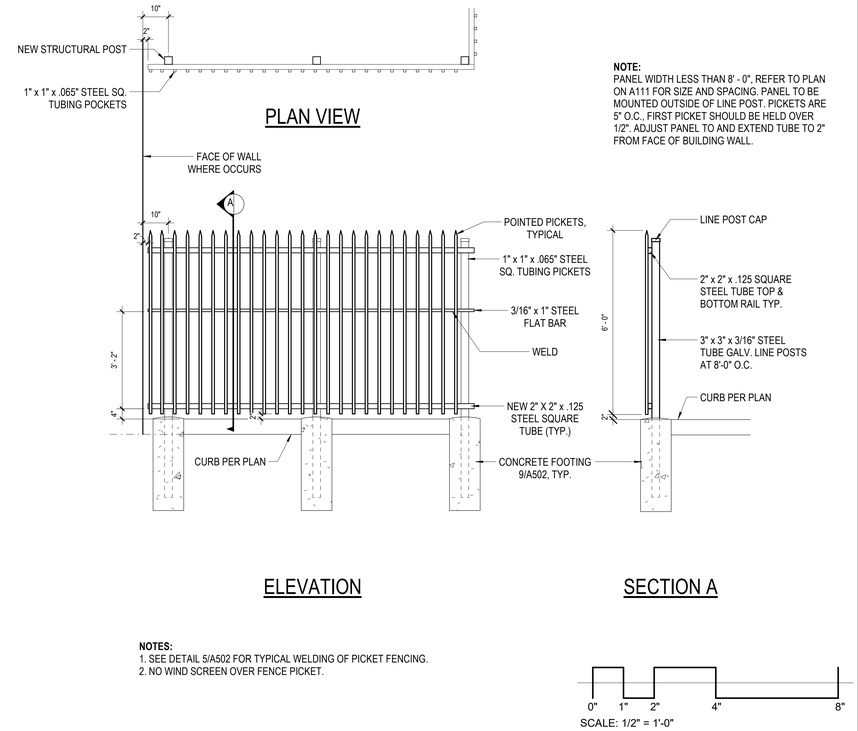

NOTE:
PANEL WIDTH LESS THAN 8' - 0", REFER TO PLAN ON A111 FOR SIZE AND SPACING. PANEL TO BE MOUNTED OUTSIDE OF LINE POST. PICKETS ARE 5" O.C., FIRST PICKET SHOULD BE HELD OVER 1/2". ADJUST PANEL TO AND EXTEND TUBE TO 2" FROM FACE OF BUILDING WALL.

NOTES:
1. SEE DETAIL 5/A502 FOR TYPICAL WELDING OF PICKET FENCING.
2. NO WIND SCREEN OVER FENCE PICKET.

SITE FENCE | 1/2" = 1'-0" | 1

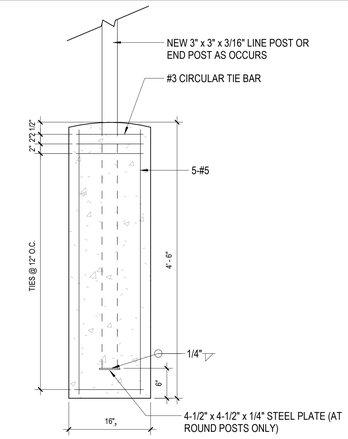

TYPICAL POST FOOTING | 1" = 1'-0" | 9

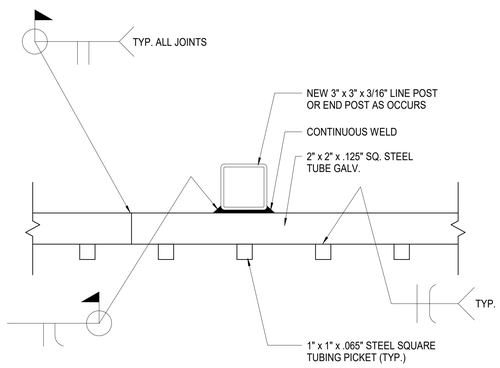

PICKET FENCE WELDING | 3" = 1'-0" | 5

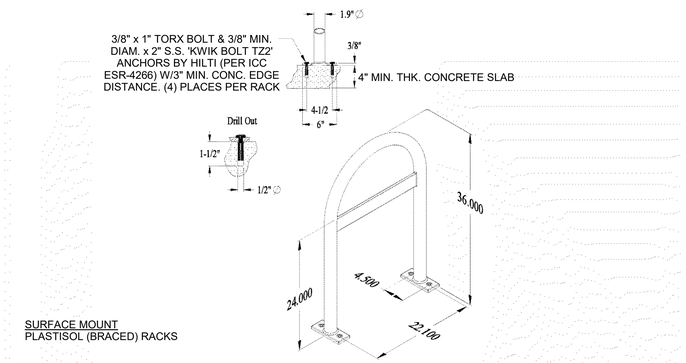

BIKE RACK - SURFACE MOUNT | 3/4" = 1'-0" | 2

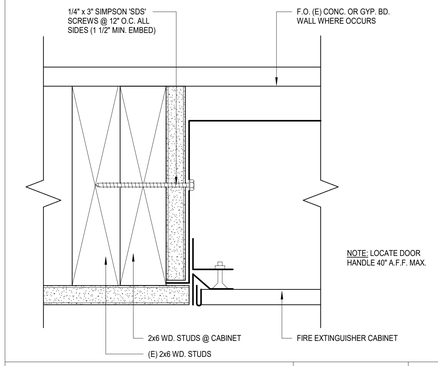

FIRE EXTINGUISHER CABINET | 6" = 1'-0" | 10

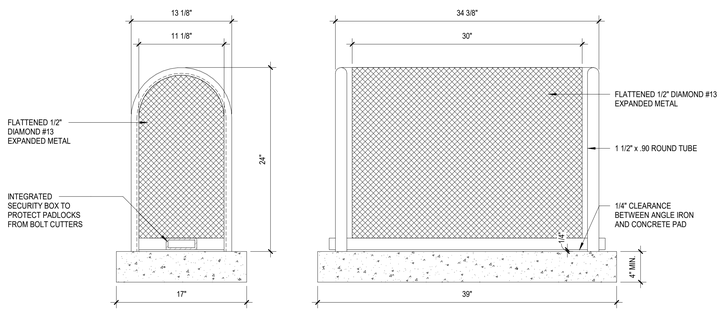

NOTE: ALL WELDED AREAS SHALL BE A MINIMUM, OF 1/2" BEAD EVERY 1 1/2"

BACKFLOW PREVENTER ENCLOSURE | 1 1/2" = 1'-0" | 6

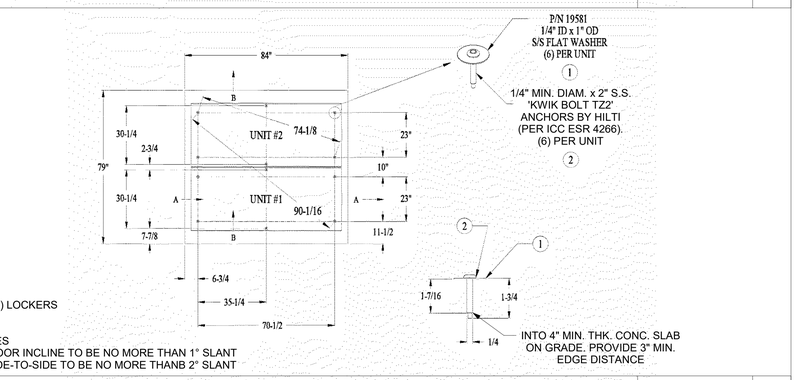

ECOPARK (M04) LOCKERS

NOTE:
INCLINE ANGLES
A. DOOR-TO-DOOR INCLINE TO BE NO MORE THAN 1° SLANT
B. BANKING SIDE-TO-SIDE TO BE NO MORE THANB 2° SLANT

LOCKER - ANCHOR PLACEMENT | 3/4" = 1'-0" | 3

IDENTIFICATION STAMP
DIV. OF THE STATE ARCHITECT
APP: 03-124589 INC:
REVIEWED FOR
SS ☑ FLS ☑ ACS ☑
DATE: 04/15/2025

VENTURA COUNTY COMMUNITY COLLEGE DISTRICT
761 EAST DAILY DRIVE
CAMARILLO, CALIFORNIA 93010
TEL: (805) 652-5500

PROJECT TITLE AND SCHOOL LOCATION

VENTURA COMMUNITY COLLEGE STEM MODULAR BUILDING
VENTURA COMMUNITY COLLEGE
4667 TELEGRAPH RD.
VENTURA, CA 93003

COMMISSIONED ARCHITECT

AMADOR

amador whittle architects, inc.
28328 AGOURA RD, 203 | AGOURA HILLS CA. 91301 | 805-558-4334

CONSULTANT

STAMPS/SEALS

LICENSED ARCHITECT
WILLIAM JORGE AMADOR
C-20348
JANUARY 31, 2027
RENEWAL DATE
STATE OF CALIFORNIA

DSA V3 SUBMITTAL 03/21/2025

SHEET TITLE:

DETAILS

PROJECT NO: 22-VCCCD-08	PROJECT ARCH: Designer
DRAWN: Author	CHECKED: Checker

SHEET NUMBER:

A502

DATE: 9/3/24 | SHEET: ___ OF ___

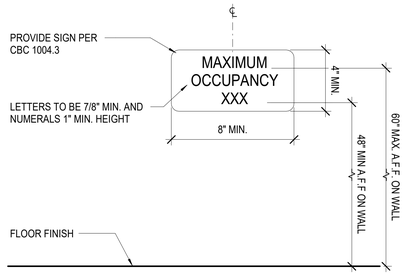

OCCUPANT LOAD SIGN | 3" = 1'-0" | 4

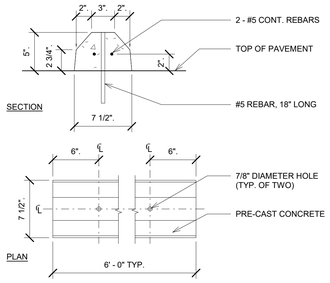

CONCRETE WHEEL STOP | 1" = 1'-0" | 3

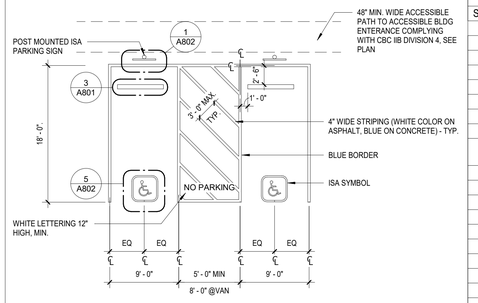

NOTE: FOR REFERNCE ONLY. CONDITIONS ARE EXISTING U.O.N. AS NEW

ACCESSIBLE PARKING STALL | 1/8" = 1'-0" | 2

SIGNAGE SCHEDULE

SIGN NO.	SIGN LOCATION	SIGN - TEXT	ROOM NO.	DETAIL
01	ALL GENDER RESTROOM	NONE - SYMBOL ONLY	106	9/C6/A802
02	ALL GENDER RESTROOM	NONE - SYMBOL ONLY	107	9/C6/A802
03	ALL GENDER RESTROOM	NONE - SYMBOL ONLY	106	9/C3/A802
04	ALL GENDER RESTROOM	NONE - SYMBOL ONLY	107	9/C3/A802
05	CADAVER ROOM	CADAVER ROOM	103	8/A802
06	CADAVER ROOM	CADAVER ROOM	103	8/A802
07	CADAVER ROOM	EXIT	103	6/E1/A802
08	ELECTRICAL/IT ROOM	FIRE PROTECTION SYSTEMS AND AIR CONDITIONING CONTROLS	104	8/B1/A802
09	JANITOR CLOSET	JANITOR CLOSET	105	8/A802
10	BIOLOGY LAB	BIOLOGY LAB	102	8/A802
11	BIOLOGY LAB	EXIT	102	6/E1/A802
12	BIOLOGY LAB	BIOLOGY LAB	102	8/A802
13	BIOLOGY LAB	EXIT	102	6/E1/A802
14	STEM HARBOR	STEM HARBOR	101	8/A802
15	STEM HARBOR	EXIT	101	6/E1/A802
16	STEM HARBOR	ALS SIGNAGE	101	11/A802
17	BIOLOGY LAB	ALS SIGNAGE	102	11/A802
18	BIOLOGY LAB	OCCUPANT LOAD	102	4/A801

SIGNAGE LEGEND

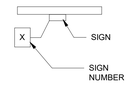

GENERAL SIGNAGE NOTES

1. REFER TO SHEET A802 FOR SIGNAGE DETAILS INCLUDING CHARACTERS & BRAILLE SIGN DETAIL.
2. REFER TO GENERAL ACCESSIBILITY NOTES ON SHEET G003 FOR ADDITIONAL REQUIREMENTS.
3. SIGNS SHALL BE LOCATED ADJACENT TO EXIT ACCESS DOORS UNLESS OTHERWISE NOTED.

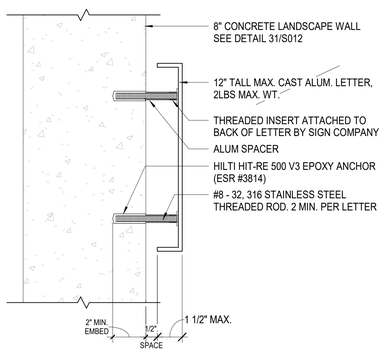

METAL LETTER MOUNTING | 3" = 1'-0" | 5

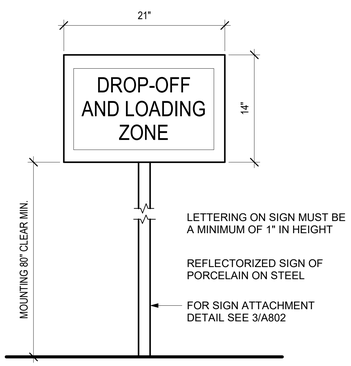

DROP-OFF & LOADING ZONE | 1 1/2" = 1'-0" | 6

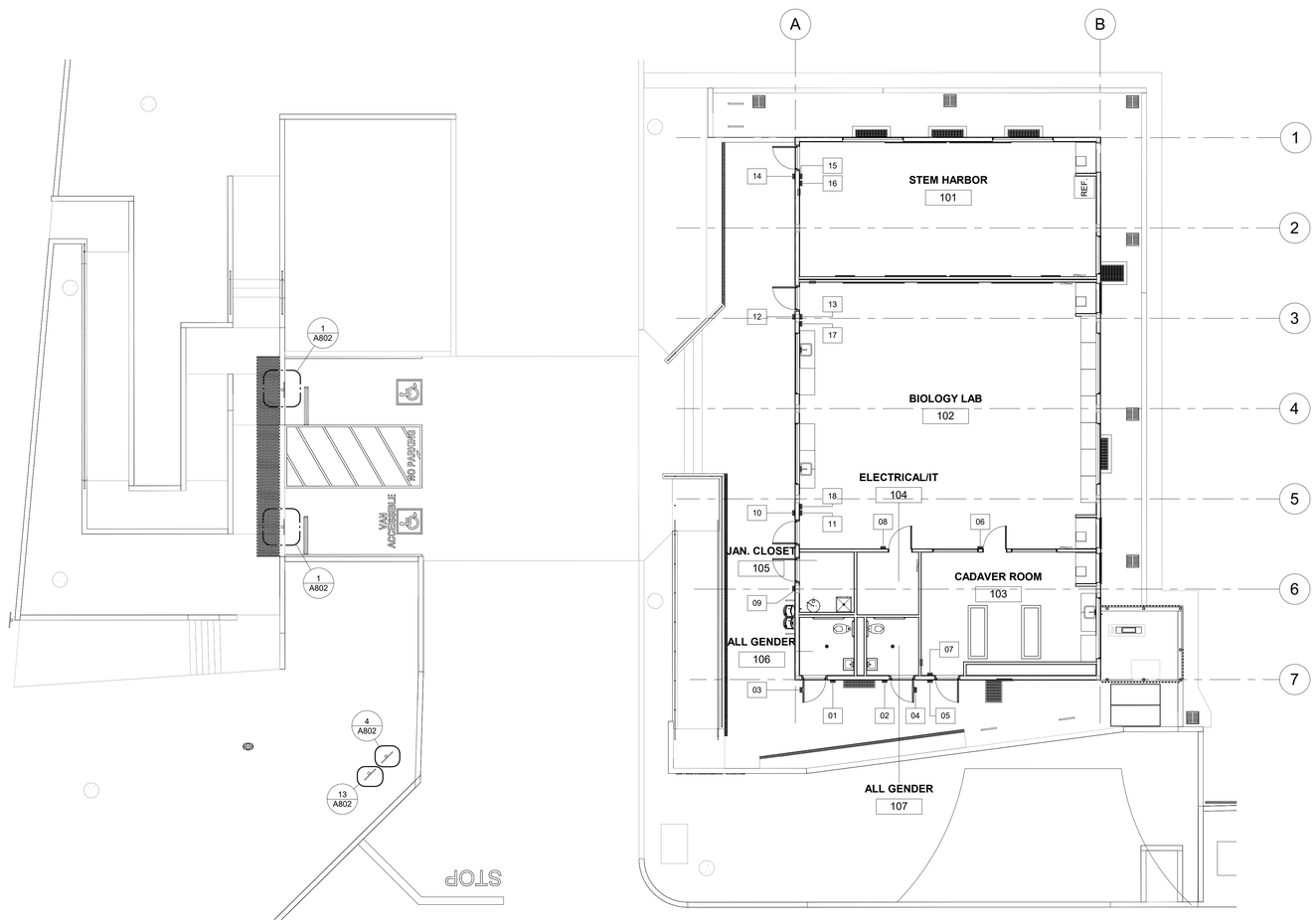

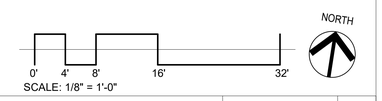

SIGNAGE PLAN | 1/8" = 1'-0" | 1

IDENTIFICATION STAMP
DIV. OF THE STATE ARCHITECT
APP: 03-124589 INC:
REVIEWED FOR
SS ☑ FLS ☑ ACS ☑
DATE: 04/15/2025

VENTURA COUNTY COMMUNITY COLLEGE DISTRICT

761 EAST DAILY DRIVE
CAMARILLO, CALIFORNIA 93010
TEL: (805) 652-5500

PROJECT TITLE AND SCHOOL LOCATION

VENTURA COMMUNITY COLLEGE STEM MODULAR BUILDING
VENTURA COMMUNITY COLLEGE
4667 TELEGRAPH RD.
VENTURA, CA 93003

COMMISSIONED ARCHITECT

AMADOR

amador whittle architects, inc.
28328 AGOURA RD, 203 | AGOURA HILLS CA, 91301 | 805-558-4334

CONSULTANT

STAMPS/SEALS

LICENSED ARCHITECT
WILLIAM JORGE AMADOR
C-20348
JANUARY 31, 2027
RENEWAL DATE
STATE OF CALIFORNIA

DSA V3 SUBMITTAL 03/21/2025

SHEET TITLE:

SIGNAGE PLAN AND SCHEDULE

PROJECT NO. 22-VCCCD-08	PROJECT ARCH: Designer
DRAWN: Author	CHECKED: Checker
SHEET NUMBER: A801	
DATE: 9/3/24	SHEET: ___ OF ___

RESTROOM SIGNAGE NOTES

1. ALL RESTROOM DOOR SIGNS SHALL BE MOUNTED AT 58" MINIMUM AND 60" MAXIMUM ABOVE FINISH FLOOR TO CENTER OF SIGN.
2. ATTACH SIGN USING (3) THREE FLATHEAD WOOD SCREWS, COUNTER-SUNK AND ADHESIVE.
3. ISA SYMBOL REQUIRED ON DOOR, WALL OR SEPARATE SIGN, NOT REQUIRED TO BE RAISED FROM BACKGROUND.
4. GEOMETRIC SYMBOL DOOR SIGNS FOR RESTROOMS MUST CONTRAST WITH DOOR. DARK ON LIGHT OR LIGHT ON DARK. FOR UNISEX DOOR SIGNS. TRIANGLE TO CONTRAST WITH CIRCLE, WHICH MUST CONTRAST WITH THE DOOR, 70% MINIMUM LIGHT/DARK. ENTIRE BACKGROUND COLOR OF GEOMETRIC SYMBOL SIGN MUST CONTRAST WITH DOOR. IT IS NOT ALLOWED TO HAVE A THIN CONTRASTING BORDER AROUND SYMBOL, WITH REMAINDER OF SIGN BACKGROUND IN A NON-CONTRASTING COLOR. ISA, CONTRASTING WITH BACKGROUND, MAY BE ON SIGN.
5. EDGES OF SIGNS SHALL BE ROUNDED, CHAMFERED OR EASED. CORNERS OF SIGNS SHALL HAVE A MINIMUM RADIUS OF 1/8 INCH.

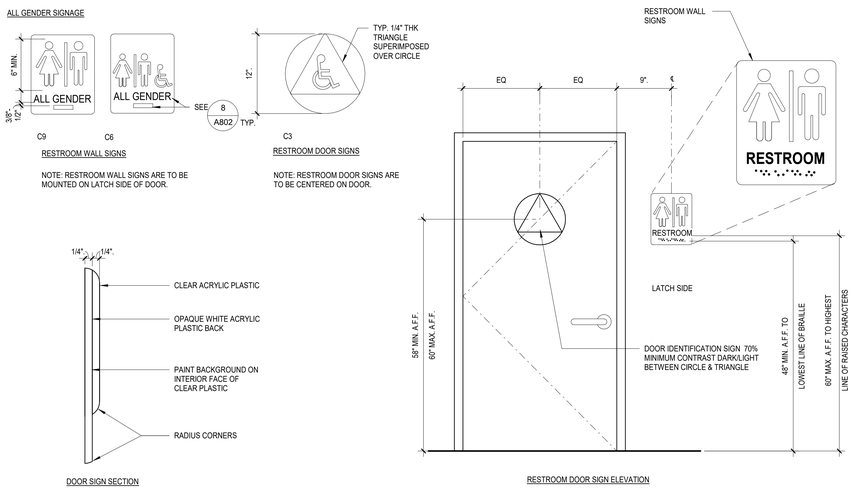

RESTROOM SIGNAGE (SIGN TYPE "C") | 1" = 1'-0" | 9

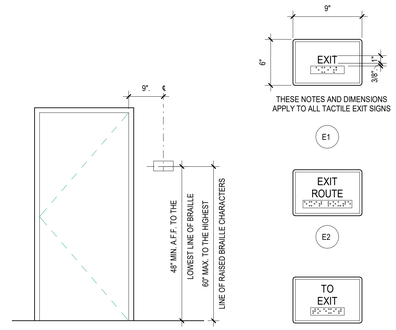

TACTILE EXIT (SIGN TYPE "E") | 1 1/2" = 1'-0" | 6

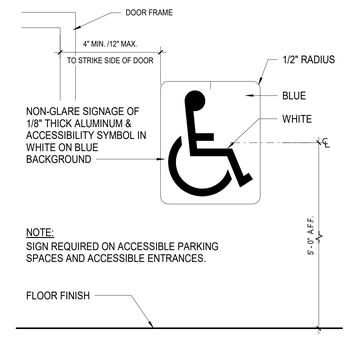

I.S.A. (SIGN TYPE "A") | 3" = 1'-0" | 2

SIGNAGE NOTES

1. CHARACTERS, SYMBOLS AND THEIR BACKGROUND SHALL HAVE A NON-GLARE FINISH. CHARACTERS AND SYMBOLS SHALL CONTRAST WITH THEIR BACKGROUND (MINIMUM 70%), EITHER LIGHT CHARACTERS ON A DARK BACKGROUND OR DARK CHARACTERS ON A LIGHT BACKGROUND.
2. CHARACTERS ON SIGNS SHALL BE SELECTED FROM FONTS WHERE THE WIDTH OF THE UPPER CASE LETTER "O" IS 60 PERCENT MINIMUM AND 110 PERCENT MAXIMUM OF THE HEIGHT OF THE UPPER CASE LETTER "I" AND A STROKE THICKNESS OF THE UPPERCASE LETTER "I" SHALL BE 15 PERCENT MAXIMUM OF THE HEIGHT OF THE CHARACTER.
3. VISUAL CHARACTERS AND NUMBERS ON SIGNS SHALL BE SIZED ACCORDING TO THE VIEW DISTANCE FROM WHICH THEY ARE TO BE READ, THE MINIMUM HEIGHT IS MEASURED USING AN UPPER CASE I. LOWERCASE CHARACTERS ARE PERMITTED. FOR SIGNS SUSPENDED OR PROJECTED ABOVE THE FINISH FLOOR IN COMPLIANCE WITH CBC TABLE 11B-703.5.5, THE MINIMUM CHARACTER HEIGHT SHALL BE 5/8" (15.9MM). REFER TO ACCOMPANYING DETAILS FOR CHARACTER HEIGHT.
4. CHARACTERS ON SIGNS SHALL BE RAISED 1/32 INCH (0.794 MM) MINIMUM AND SHALL BE SANS SERIF UPPERCASE CHARACTERS ACCOMPANIED BY GRADE 2 BRAILLE COMPLYING WITH CBC SECTION
5. RAISED CHARACTERS SHALL BE A MINIMUM OF 5/8 INCH (15.9 MM) AND A MAXIMUM OF 2 INCHES (51 MM) HIGH (2022 CBC 11B-703.2.5). REFER TO ACCOMPANYING DETAILS FOR CHARACTER HEIGHT.
6. PICTORIAL SYMBOL SIGNS (PICTOGRAMS) SHALL BE ACCOMPANIED BY THE VERBAL DESCRIPTION PLACED DIRECTLY BELOW THE PICTOGRAM. THE OUTSIDE DIMENSION OF THE PICTOGRAM FIELD SHALL BE A MINIMUM OF 6 INCHES (152 MM) IN HEIGHT.
7. CONTRACTED CALIFORNIA GRADE 2 BRAILLE. DOT SHALL BE 1/10 INCHES (2.54MM) ON CENTER IN EACH CELL WITH 0.300" (7.62 MM) SPACE BETWEEN CELLS, MEASURED FROM THE FIRST COLUMN OF DOTS IN THE FIRST CELL TO THE FIRST COLUMN OF DOTS IN THE SECOND CELL. DOTS SHALL BE RAISED A MINIMUM OF 1/40 INCH (0.635 MM) ABOVE THE BACKGROUND (2022 CBC 11B-703.3 & 703.4).
8. WHERE PERMANENT IDENTIFICATION IS PROVIDED FOR ROOMS AND SPACES, SIGN SHALL BE INSTALLED ON THE WALL ADJACENT TO THE LATCH OUTSIDE OF THE DOOR AS INDICATED ON THE ACCOMPANYING DETAIL(S). WHERE THERE IS NO WALL SPACE ON THE LATCH SIDE INCLUDING AT DOUBLE LEAF DOORS, SIGN SHALL BE PLACED ON THE NEAREST ADJACENT WALL, PREFERABLY ON THE RIGHT. SIGNS SHALL BE 48 INCHES MINIMUM ABOVE THE FINISH FLOOR OR GROUND SURFACE, MEASURED FROM THE BASELINE OF THE LOWEST BRAILLE CELLS AND 60 INCHES MAXIMUM ABOVE THE FINISH FLOOR OR GROUND SURFACE, MEASURED FROM THE BASELINE OF THE HIGHEST LINE OF RAISED CHARACTERS (11B-703.4.1). SIGNS CONTAINING TACTILE CHARACTERS SHALL BE LOCATED SO THAT A CLEAR FLOOR SPACE OF 18 INCHES MINIMUM BY 18 INCHES MINIMUM, CENTERED ON THE TACTILE CHARACTERS, IS PROVIDED BEYOND THE ARC OF ANY DOOR SWING BETWEEN THE CLOSED POSITION AND 45-DEGREE OPEN POSITION.
9. THE INTERNATIONAL SYMBOL OF ACCESSIBILITY (ISA) SHALL BE THE STANDARD USED TO IDENTIFY FACILITIES THAT ARE ACCESSIBLE TO AND AND USABLE BY PHYSICALLY DISABLED PERSON. THE SYMBOL SHALL CONSIST OF A WHITE FIGURE ON A BLUE BACKGROUND. THE BLUE SHALL BE EQUAL TO COLOR NO. FS 15090 IN FEDERAL STANDARD 595C.
10. THE ISA SHALL BE INSTALLED ON THE WALL ADJACENT TO THE LATCH SIDE OF THE DOOR AT SANITARY FACILITIES THAT ARE ACCESSIBLE. AT NON-ACCESSIBLE SANITARY FACILITIES / SIGN SHALL BE PROVIDE DIRECTING PEOPLE TO THE NEAREST ACCESSIBLE SANITARY FACILITY.
11. ALL BUILDING ENTRANCES THAT ARE ACCESSIBLE TO AND USABLE BY PERSONS WITH DISABILITIES SHALL BE IDENTIFIED WITH A MINIMUM OF ONE INTERNATIONAL SYMBOL OF ACCESSIBILITY AND WITH ADDITIONAL DIRECTIONAL SIGN, UTILIZING THE SYMBOL, AT JUNCTIONS, TO BE VISIBLE TO PERSON ALONG APPROACHING PEDESTRIAN WAYS
12. DOORWAYS LEADING TO MALE SANITARY FACILITIES SHALL BE IDENTIFIED BY A GEOMETRIC SIGN COMPRISED OF AN EQUILATERAL TRIANGLE 1/4 INCH THICK WITH EDGES 12 INCHES LONG AND A VERTEX POINTING UPWARD. (MINIMUM 70% CONTRASTING DARK TO LIGHT FROM FINISH UP DOOR).
13. DOORWAYS LEADING TO FEMALE SANITARY FACILITIES SHALL BE IDENTIFIED BY A GEOMETRIC SIGN COMPRISED OF CIRCLE 1/4 INCH THICK (6.4MM) 12 INCHES (305MM) IN DIAMETER (MINIMUM 70% CONTRAST DARK TO LIGHT FROM FINISH OF DOOR)
14. DOORWAYS LEADING TO UNISEX SANITARY FACILITIES SHALL BE IDENTIFIED BY A GEO- METRIC SIGN COMPRISED OF CIRCLE 1/4 INCH THICK (6.4 MM) 12 INCHES IN DIAMETER (305MM) WITH A 1/4" THICK TRIANGLE SUPERIMPOSED ON A CIRCLE AND WITHIN THE 12 INCHES DIAMETER (MINIMUM 70% CONTRAST DARK TO LIGHT FROM FINISH OF DOOR AND FROM TRIANGLE TO CIRCLE).
15. GEOMETRIC SYMBOLS SHALL BE CENTERED ON THE DOOR AT A HEIGHT OF 60 INCHES AND THEIR COLOR AND CONTRAST SHALL BE DISTINCTLY DIFFERENT FROM THE COLOR AND CONTRAST OF THE DOOR (CBC 11B-703.7.2.6.1, 11B703.7.2.6.2, 11B-703.7.2.6.3).
16. EACH GRADE-LEVEL EXTERIOR EXIT DOOR SHALL BE IDENTIFIED BY A TACTILE EXIT SIGN WITH THE WORD "EXIT".
17. EACH EXIT DOORS THAT LEADS DIRECTLY TO A GRADE-LEVEL EXTERIOR EXIT BY MEANS OF A STAIRWAY OR RAMP SHALL BE IDENTIFIED BY A TACTILE EXIT SIGN WITH THE FOLLOWING WORDS AS APPROPRIATE, "EXIT STAIR DOWN", EXIT RAMP", "EXIT STAIR UP", "EXIT RAMP UP".
18. EACH EXIT DOORS THAT LEADS DIRECTLY TO A GRADE-LEVEL EXTERIOR EXIT BY MEANS OF EXIT ENCLOSURE OR AN EXIT PASSAGEWAY SHALL BE IDENTIFIED BY A TACTILE EXIT SIGN WITH THE WORD "EXIT ROUTE"
19. EACH EXIT ACCESS DOOR FROM AN INTERIOR ROOM OR AREA TO A CORRIDOR OR HALLWAY THAT IS REQUIRED TO HAVE A VISUAL EXIT SIGN, SHALL BE IDENTIFIED BY A TACTILE EXIT SIGN WITH THE WORDS, "EXIT ROUTE"
20. EACH EXIT DOOR THROUGH A HORIZONTAL EXIT SHALL BE IDENTIFIED BY A SIGN WITH THE WORDS "TO EXIT"
21. PROVIDE MECH'L MOUNTING W/ VANDAL-RESISTANT FASTENERS, COMPLY W/ ARTICLE 4.30 BCA43-0 OF THE ADAAS.

BRAILLE SIGNAGE NOTES

1. CHARACTER TYPE: CHARACTERS ON SIGNS SHALL BE RAISED 1/32" (0.794 MM) MINIMUM AND SHALL BE SANS SERIF UPPERCASE CHARACTERS ACCOMPANIED BY GRADE 2 BRAILLE (SEE NOTE E BELOW). CBC 11B-703.2
2. CHARACTER SIZE: RAISED CHARACTERS SHALL BE A MINIMUM OF 5/8" (15.9 MM) AND A MAXIMUM OF 2 INCHES (51 MM) HIGH BASED ON THE HEIGHT OF THE UPPERCASE LETTER "I". CBC 11B-703.2.5
3. FINISH AND CONTRAST: CONTRAST BETWEEN CHARACTERS, PICTOGRAMS, SYMBOLS AND THEIR BACKGROUND MUST HAVE A NON-GLARE FINISH. CHARACTERS, PICTOGRAMS AND SYMBOLS SHALL CONTRAST WITH THEIR BACKGROUND, EITHER LIGHT ON A DARK BACKGROUND OR DARK ON A LIGHT BACKGROUND. CBC 11B-703.5.1, 11B-703.6.2, 11B-703.7.1
4. PROPORTIONS: CHARACTERS ON SIGNS SHALL BE SELECTED FROM FONTS WHERE THE WIDTH OF THE UPPERCASE LETTER "O" IS 60 % MINIMUM AND 110% MAXIMUM OF THE HEIGHT OF THE UPPERCASE LETTER "I". CBC 11B-703.2.4, 11B-703.5.4. STROKE THICKNESS OF THE UPPERCASE LETTER "I" SHALL BE 15% MAXIMUM OF THE HEIGHT OF THE CHARACTER FOR RAISED CHARACTERS AND 10% MINIMUM AND 20% MAXIMUM OF THE HEIGHT OF THE CHARACTER FOR VISUAL CHARACTERS. CBC 11B-703.2.6, 11B-703.5.7
   AFTER CHOOSING A TYPESTYLE TO TEST, BEGIN BY PRINTING THE LETTERS "I" AND "O" AT 1 INCH HIGH. PLACE THE TEMPLATE'S 1:1 SQUARE OVER THE "O". IF THE CHARACTER IS NOT WIDER THAN 1 INCH, NOR NARROWER THAN THE 3:5 RECTANGLE, THE PROPORTIONS ARE CORRECT. USE THE 15% OR 10% RECTANGLE TO DETERMINE IF THM STROKE OF THE "I" IS TOO BROAD, AND THE 10% RECTANGLE TO SEE IF IT IS TOO NARROW. IF ALL THE TESTS ARE PASSED, THE TYPESTYLE IS COMPLIANT WITH PROPORTION CODE.
   TEMPLATE FOR CHECKING CHARACTER AND STROKE WIDTH TO HEIGHT PROPORTIONS:

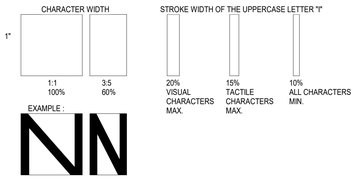

5. BRAILLE: CONTRACTED CALIFORNIA GRADE 2 BRAILLE SHALL BE USED WHEREVER BRAILLE IS REQUIRED IN OTHER PORTIONS OF THESE STANDARDS. DOTS SHALL BE 1/10 INCH (2.5 MM) ON CENTERS IN EACH CELL WITH 0.30 INCH (7.6 MM) SPACE BETWEEN CELLS, MEASURED FROM THE SECOND COLUMN OF DOTS IN THE FIRST CELL TO THE FIRST COLUMN OF DOTS IN THE SECOND CELL. DOTS SHALL BE RAISED A MINIMUM OF 1/40 INCH (0.635 MM) ABOVE THE BACKGROUND AND 0.037" MAXIMUM. CBC 11B-703.3

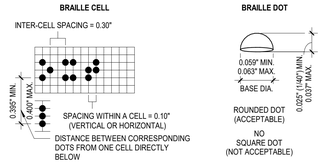

INDIVIDUAL BRAILLE DOTS SHALL EACH BE DISTINCT & SEPARATE. EACH DOT SHALL BE ROUNDED OR DOMED IN LIEU OF SQUARE SIDED & FLAT TOPPED. DOTS WITH STRAIGHT SIDES AND FLAT TOPS ARE NOT READABLE FOR MANY BRAILLE USERS.

CHARACTERS & BRAILLE SIGN (SIGN TYPE "F") | 6" = 1'-0" | 7

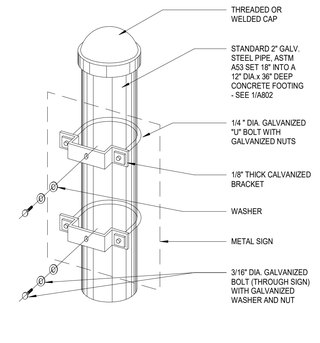

POST MOUNT DETAIL | 3" = 1'-0" | 3

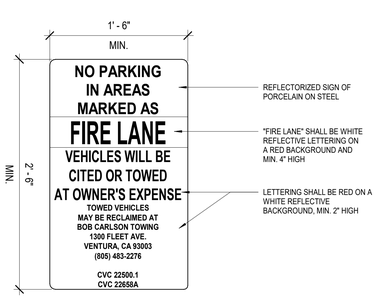

FIRE LANE SIGN AT ENTRY | 1 1/2" = 1'-0" | 12

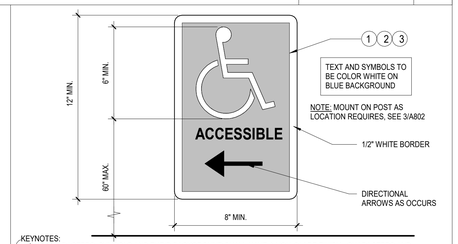

KEYNOTES:
1. CHARACTERS, SYMBOLS AND THEIR BACKGROUND SHALL HAVE A NON-GLARE FINISH. CHARACTERS AND SYMBOLS SHALL CONTRAST WITH THEIR BACKGROUND(MINIMUM 70%), EITHER LIGHT CHARACTERS ON A DARK BACKGROUND OR DARK CHARACTERS ON A LIGHT BACKGROUND.
2. CHARACTERS ON SIGNS SHALL BE SELECTED FROM FONTS WHERE THE WIDTH OF THE UPPER CASE LETTER "O" IS 60 PERCENT MINIMUM AND 110 PERCENT MAXIMUM OF THE HEIGHT OF THE UPPER CASE LETTER "I" AND A STROKE THICKNESS OF THE UPPER CASE LETTER "I" SHALL BE 15 PERCENT MAXIMUM OF THE HEIGHT OF THE CHARACTER.
3. VISUAL CHARACTERS AND NUMBERS ON SIGNS SHALL BE SIZED ACCORDING TO THE VIEW DISTANCE FROM WHICH THEY ARE TO BE READ, THE MINIMUM HEIGHT IS MEASURED USING AN UPPER CASE I. LOWERCASE CHARACTERS ARE PERMITTED. FOR SIGNS SUSPENDED OR PROJECTED ABOVE THE FINISH FLOOR IN COMPLIANCE WITH CBC TABLE 11B-703.5.5, THE MINIMUM CHARACTER HEIGHT SHALL BE 5/8" (15.9MM). REFER TO ACCOMPANYING DETAILSFOR CHARACTER HEIGHT.

NOTES:
1. SIGN TO CONFORM TO ALL CURENT, FEDERAL, STATE, LOCAL CODES AND/ OR REGULATIONS.
2. ARROW SHALL POINT IN THE DIRECTION OF THE PATH OF TRAVEL.
3. PROVIDE 1/2" DIA. HOLES AT EACH CORNER FOR MOUNTING SIGNS TO CHAIN-LINK FENCE WITH FENCE CLIPS @ SCREWS WALL MOUNTING USING GALVANIZED WASHERS, EXPANSION SHIELDS AND VANDAL-PROOF SCREWS.

DIRECTIONAL SIGN | 3" = 1'-0" | 10

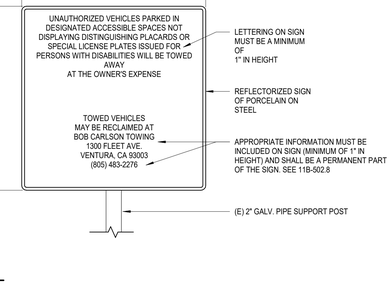

VEHICLE TOW AWAY SIGN | 1 1/2" = 1'-0" | 4

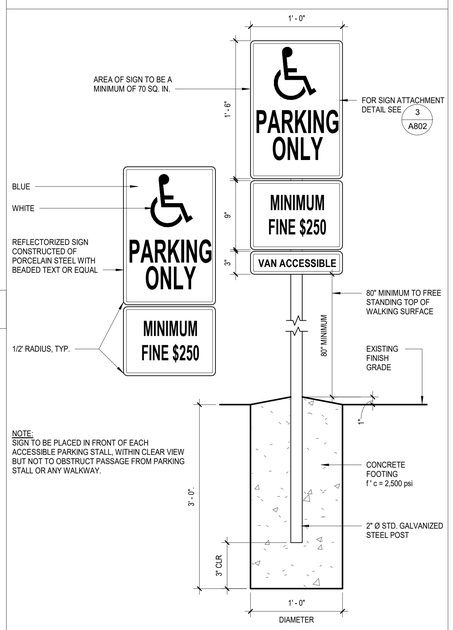

ADA PARKING STALL SIGN | 1 1/2" = 1'-0" | 1

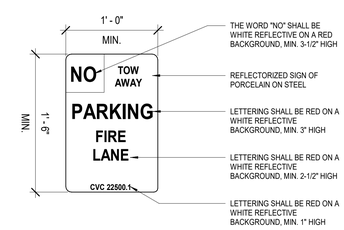

FIRE LANE SIGN ALONG FIRE LANE | 1 1/2" = 1'-0" | 13

ASSISTIVE LISTENING SIGN | 6" = 1'-0" | 11

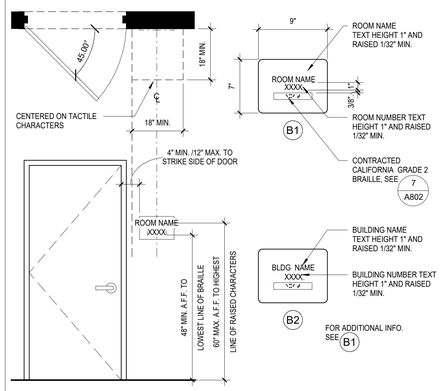

BLDG. & ROOM I.D. (SIGN TYPE "B") | 1 1/2" = 1'-0" | 8

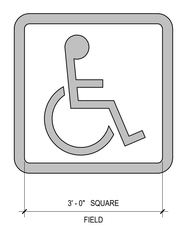

PAINTED FIELD:
BLUE TRAFFIC PAINT 3'-0" SQUARE WITH 3" RADIUS CORNERS

PAINTED SYMBOL:
WHITE TRAFFIC PAINT 3" MIN. WIDE STRIPING

I.S.A. PARKING STALL SYMBOL | 3/4" = 1'-0" | 5

IDENTIFICATION STAMP
DIV. OF THE STATE ARCHITECT
APP: 03-124589 INC:
REVIEWED FOR
SS ☑ FLS ☑ ACS ☑
DATE: 04/15/2025

VENTURA COUNTY COMMUNITY COLLEGE DISTRICT
761 EAST DAILY DRIVE
CAMARILLO, CALIFORNIA 93010
TEL: (805) 652-5500

PROJECT TITLE AND SCHOOL LOCATION

VENTURA COMMUNITY COLLEGE STEM MODULAR BUILDING
VENTURA COMMUNITY COLLEGE
4667 TELEGRAPH RD.
VENTURA, CA 93003

COMMISSIONED ARCHITECT

AMADOR

amador whittle architects, inc.
28328 AGOURA RD, 203 | AGOURA HILLS CA, 91301 | 805-558-4334

CONSULTANT

STAMPS/SEALS

LICENSED ARCHITECT
WILLIAM DRAKE AMADOR
C-20348
JANUARY 31, 2027
RENEWAL DATE
STATE OF CALIFORNIA

DSA V3 SUBMITTAL 03/21/2025

SHEET TITLE:

SIGNAGE DETAILS

PROJECT NO: 22-VCCCD-08	PROJECT ARCH: Designer
DRAWN: Author	CHECKED: Checker
SHEET NUMBER: A802	
DATE: 9/3/24	SHEET: ___ OF ___

CONCRETE

1. CONCRETE IS REINFORCED AND CAST-IN-PLACE UNLESS OTHERWISE NOTED. WHERE REINFORCING IS NOT SPECIFICALLY SHOWN OR WHERE DETAILS ARE NOT GIVEN, PROVIDE REINFORCING SIMILAR TO THAT SHOWN FOR SIMILAR CONDITIONS, SUBJECT TO REVIEW BY THE OWNER'S REPRESENTATIVE.

2. ALL STRUCTURAL CONCRETE SHALL BE TYPE II OR V (SEE NOTE 4) HAVE A MINIMUM COMPRESSIVE STRENGTH AT 28 DAYS AND A MAX WATER CEMENT RATIO W/C AS FOLLOWS:
   A. ALL CONCRETE U.N.O.: 3000 PSI NORMAL WEIGHT, W/C = 0.5

3. ALL STRUCTURAL CONCRETE MIXES SHALL BE DESIGNED BY AN APPROVED LABORATORY AND SHALL BE STAMPED AND SIGNED BY A CIVIL ENGINEER LICENSED IN CALIFORNIA.

4. CONCRETE MIXES SHALL BE PREPARED WITH TYPE II/V PORTLAND CEMENT CONFORMING TO ASTM C150. CONCRETE MIX DESIGNS CONTAINING FLY ASH MAY BE USED WHERE CONCRETE IS NOT VISUALLY EXPOSED. FLY ASH SHALL CONFORM WITH ASTM C618 AND MAY REPLACE UP TO 20% PORTLAND CEMENT BY VOLUME.

5. NORMAL WEIGHT CONCRETE AGGREGATES SHALL CONFORM TO ASTM C33. LIGHT WEIGHT CONCRETE AGGREGATES SHALL CONFORM TO ASTM C330.

6. NO MORE THAN ONE GRADE OF CONCRETE SHALL BE ON THE JOB SITE AT ANY ONE TIME.

7. THOROUGHLY CLEAN AND ROUGHEN ALL HARDENED CONCRETE AND MASONRY SURFACES TO RECEIVE NEW CONCRETE. INTERFACE SHALL BE ROUGHENED TO A FULL AMPLITUDE OF 1/4" UNLESS NOTED OTHERWISE.

8. KEY AND DOWEL POUR JOINTS AS SHOWN ON THE PLANS. ANY DEVIATION FROM POUR JOINTS SHOWN ON THE PLANS MUST BE APPROVED BY THE OWNER'S REPRESENTATIVE.

9. NON-SHRINK CEMENT GROUT SHALL HAVE A MINIMUM 28 DAY COMPRESSIVE STRENGTH OF 7000 PSI.

10. DEFECTIVE CONCRETE (VOIDS, ROCK POCKETS, HONEYCOMBS, CRACKING, ETC.) SHALL BE REMOVED AND REPLACED AS DIRECTED BY THE OWNER'S REPRESENTATIVE.

FOUNDATIONS

1. THE DESIGN OF THE FOUNDATION SYSTEM IS BASED UPON THE CRITERIA AND RECOMMENDATIONS CONTAINED IN THE GEOTECHNICAL INVESTIGATION LETTER TITLED "STEM MODULAR CLASSROOM, VENTURA COLLEGE, VENTURA CA", BY GEOTECHNIQUES. DATED 07/31/2024, PROJECT NO.1003.056

2. THE GEOTECHNICAL INVESTIGATION REPORT AND ITS RECOMMENDATIONS SHALL BE FOLLOWED AND SHALL BE CONSIDERED MINIMUM REQUIREMENTS UNLESS MORE STRINGENT REQUIREMENTS ARE PRESENTED IN THE SPECIFICATIONS OR ON THE DRAWINGS.

3. PER GEOTECHNICAL INVESTIGATION LETTER TITLED "STEM MODULAR CLASSROOM, VENTURA COLLEGE, VENTURA CA", BY GEOTECHNIQUES DATED 07/31/2024 WITH PROJECT NO.1003.056,THE ALLOWABLE SOIL BEARING PRESSURES ARE AS FOLLOWS:

   A. CONTINUOUS FOOTING: 1,500 PSF

   B. ISOLATED SPREAD FOUNDATIONS: 1,500 PSF

4. REMOVE LOOSE SOIL AND STANDING WATER FROM FOUNDATION EXCAVATIONS PRIOR TO PLACING CONCRETE. THE GEOTECHNICAL ENGINEER SHALL INSPECT AND APPROVE ALL EXCAVATIONS, SOIL COMPACTION WORK PRIOR TO PLACEMENT OF ANY REBAR OR CONCRETE, SHORING INSTALLATIONS, BACKFILL MATERIALS AND BACK FILLING PROCEDURES.

5. LOCATE AND PROTECT EXISTING UTILITIES TO REMAIN DURING AND/OR AFTER CONSTRUCTION.

6. REMOVE ABANDONED FOOTINGS, UTILITIES, ETC. WHICH INTERFERE WITH NEW CONSTRUCTION, UNLESS OTHERWISE INDICATED.

7. NOTIFY THE OWNER'S REPRESENTATIVE IF ANY BURIED STRUCTURES NOT INDICATED, SUCH AS CESSPOOLS, CISTERNS, FOUNDATIONS, ETC., ARE FOUND.

8. THE CONTRACTOR IS SOLELY RESPONSIBLE FOR EXCAVATION PROCEDURES INCLUDING LAGGING, SHORING, UNDERPINNING AND PROTECTION OF EXISTING CONSTRUCTION.

9. PLACE BACKFILL BEHIND RETAINING WALLS AFTER CONCRETE OR MASONRY HAS ATTAINED FULL DESIGN STRENGTH. BRACE BUILDING AND PIT WALLS BELOW GRADE FROM LATERAL LOADS UNTIL ATTACHED FLOORS AND SLABS ON GRADE ARE COMPLETE AND HAVE ATTAINED FULL DESIGN STRENGTH.

10. THE CONTRACTOR SHALL PROVIDE CARE IN DRILLING, PLACEMENT OF STEEL REINFORCEMENT, AND POURING OF CONCRETE TO AVOID DISTURBANCE OF PILE BORING WALLS. THE STEEL REINFORCEMENT CAGE SHALL BE INSTALLED AND CONCRETE SHALL BE PLACED INTO THE PILE HOLE IMMEDIATELY AFTER THE HOLE IS DRILLED. PILE HOLES SHALL NOT BE LEFT OPEN OVERNIGHT. WHERE PILE SPACING IS LESS THAN THREE DIAMETERS, DRILLING SHALL NOT BE CARRIED OUT BEFORE THE PREVIOUSLY POURED PILE CONCRETE HAS SET FOR AT LEAST TWENTY FOUR HOURS.

11. IN THE EVENT OF SOIL OR WATER SEEPAGE INTO THE PILE EXCAVATION, CASING AND/OR THE USE OF "POLYMER-SLURRY" DRILLING FLUID MAY BE REQUIRED IF CAVING IS ENCOUNTERED BELOW THE WATER SEEPAGE LEVEL, IN ORDER TO ACHIEVE THE REQUIRED DEPTH, AND MAINTAIN AN OPEN EXCAVATION TO ALLOW FOR THE PLACEMENT OF REINFORCING STEEL AND CONCRETE. CASING SHALL BE PULLED AS THE PILE EXCAVATION IS FILLED WITH CONCRETE, MAINTAINING AT LEAST FIVE FEET OF CONCRETE HEAD INSIDE THE CASING. CONCRETE SHALL BE PLACED AND VIBRATED THROUGHOUT THE FULL LENGTH OF THE PILE SO THAT VOIDS DO NOT EXIST IN EITHER THE PILE BASE OR THE SHAFT. PLACEMENT PROCEDURES SHALL BE USED TO ENSURE THAT AGGREGATE SEGREGATION DOES NOT OCCUR.

REINFORCEMENT

1. ALL TYPICAL REINFORCING BARS SHALL CONFORM TO ASTM A-615, GRADE 60, UNLESS NOTED OTHERWISE ON THE DRAWINGS (#3 BARS MAY BE GRADE 40 FOR AVAILABILITY)

   A. SPIRALS SHALL BE COLD DRAWN BARS CONFORMING TO ASTM A-82. REINFORCING FOR DIAPHRAGMS AND FOUNDATIONS MAY BE GRADE 75 IN LIEU OF GRADE 60, AT THE CONTRACTOR'S OPTION. MAINTAIN OVERALL CAPACITY OF ELEMENTS WHERE GRADE 75 REINFORCING IS PROPOSED FOR USE. IN GENERAL, REDUCE REQUIRED STEEL AREA IN PROPORTION TO RATIO OF YIELD STRENGTH. MAINTAIN BAR SPACING SHOWN ON PLANS, DETAILS, AND SCHEDULES.
   B. MOMENT FRAME LONGITUDINAL REBARS, SHEAR WALL VERTICAL REBARS, AND COUPLING BEAM LONGITUDINAL REBARS SHALL BE ASTM A-706 [Fy=60 KSI].
   C. SMOOTH DOWELS IN SLAB ON GRADE: ASTM A36, 36 KSI

2. WELDING OF REINFORCEMENT (INCLUDING TACK WELDING) SHALL NOT BE DONE UNLESS SPECIFICALLY SHOWN ON THE DRAWINGS. WHERE SHOWN ON THE DRAWINGS, THE FOLLOWING SHALL APPLY:

   A. WELDED REBAR SHALL COMPLY WITH ASTM A-706 [Fy=60 KSI]
   B. WELDING SHALL CONFORM TO AWS D1.4
   C. USE E90XX ELECTRODES

3. WELDED WIRE FABRIC SHALL BE MADE OF COLD DRAWN WIRE AND SHALL CONFORM TO ASTM A-185 [Fy=65 KSI]. MINIMUM LAP AT SPLICES OF 12 INCHES. PROVIDE MESH IN FLAT SHEETS ONLY. ROLLED MESH IS NOT ACCEPTABLE. OFFSET END-LAPS IN ADJACENT SHEETS TO PREVENT CONTINUOUS LAPS.

4. REINFORCING STEEL SHALL HAVE THE FOLLOWING CONCRETE COVER. SEE ACI FOR TOLERANCES:

   A. CONCRETE POURED AGAINST EARTH 3"
   B. FORMED CONCRETE IN CONTACT WITH EARTH 2"
   C. CONCRETE EXPOSED TO WEATHER (#6 AND LARGER) 2"
   D. CONCRETE EXPOSED TO WEATHER (#5 AND SMALLER) 1-1/2"
   E. SLABS (INCLUDING SLAB SUPPORTING EARTH), WALLS, AND JOISTS NOT EXPOSED TO WEATHER (#11 AND SMALLER) 1"
   F. OTHER CONCRETE NOT EXPOSED TO WEATHER 1-1/2"

5. #5 AND LARGER REINFORCING BARS SHALL NOT BE SPLICED EXCEPT AS LOCATED AND DETAILED ON THE DRAWINGS. #4 AND SMALLER BARS WITH LENGTHS NOT SHOWN SHALL BE CONTINUOUS. PROVIDE CLASS 'B' SPLICE UNLESS NOTED OTHERWISE. ALL BARS IN MASONRY SHALL BE CONTINUOUS, LAPPING 48 BAR DIAMETERS, 2'-0" MINIMUM. HORIZONTAL WALL SPLICES SHALL BE STAGGERED. VERTICAL BARS SHALL NOT BE SPLICED EXCEPT AT HORIZONTAL SUPPORTS, SUCH AS FLOOR OR ROOF, UNLESS DETAILED OTHERWISE. ALL BARS ENDING AT THE FACE OF A WALL, COLUMN, OR BEAM SHALL EXTEND TO WITHIN 2" OF THE FAR FACE AND HAVE A 90 DEGREE HOOK, UNLESS OTHERWISE SHOWN.

6. BARS SHALL BE FIRMLY SUPPORTED AND ACCURATELY PLACED AS REQUIRED BY THE ACI STANDARDS, USING TIE AND SUPPORT BARS IN ADDITION TO REINFORCEMENT SHOWN WHERE NECESSARY FOR FIRM AND ACCURATE PLACING. PROVIDE DOWELS TO MATCH ALL REINFORCEMENT AT POUR JOINTS, UNLESS SHOWN OR NOTED OTHERWISE. ALL DOWELS AND BOLTS SHALL BE ACCURATELY SET IN PLACE BEFORE PLACING CONCRETE. NO WELDING OF REINFORCEMENT (INCLUDING TACK WELDING) SHALL BE DONE UNLESS SHOWN ON THE DRAWINGS OR APPROVED BY THE ENGINEER. ALL SLAB AND BEAM REINFORCEMENT SHALL BE CHAIRED UP.

7. IN WALL REINFORCING, CURTAINS CONTAINING VERTICAL AND HORIZONTAL BARS OF THE SAME SIZE, VERTICAL BARS SHALL BE PLACED CLOSEST TO THE WALL SURFACE. IN CURTAINS WHICH VERTICAL AND HORIZONTAL BARS ARE OF DIFFERENT SIZES OR SPACING, THE LAYER WITH THE MOST STEEL SHALL BE PLACED CLOSEST TO THE NEAR SURFACE.

8. DRAWINGS SHOW TYPICAL REINFORCING CONDITIONS. CONTRACTOR SHALL PREPARE DETAILED PLACEMENT DRAWINGS OF ALL CONDITIONS SHOWING QUANTITY, SPACING, SIZES, CLEARANCES, LAPS, INTERSECTIONS, AND COVERAGE REQUIRED BY THE STRUCTURAL DETAILS, APPLICABLE CODE, AND TRADE STANDARDS. CONTRACTOR SHALL NOTIFY REINFORCING INSPECTOR OF ANY ADJUSTMENTS FROM TYPICAL CONDITIONS WHICH ARE PROPOSED IN PLACEMENT DRAWINGS TO FACILITATE FIELD PLACEMENT OF REINFORCING STEEL AND CONCRETE.

9. ALL PRINCIPAL REBAR SHALL TERMINATE WITH A STANDARD HOOK MINIMUM UNLESS SPECIFICALLY DETAILED OTHERWISE. REBAR BENDS SHALL BE MADE COLD. REBAR SHALL NOT BE BENT AFTER ANY PORTION OF THE BAR IS ENCASED IN CONCRETE.

10. ALL LAP SPLICES ARE CLASS 'B' LAP SPLICES UNLESS NOTED OTHERWISE.

11. ALL WALL FOOTING REINFORCEMENT SHALL BEND AROUND ALL CORNERS AND EXTEND 36 BAR DIAMETERS OR 18 INCHES WHICHEVER IS LARGER. UNLESS NOTED OTHERWISE.

12. ALL SLABS ON GRADE LESS THAN 6" IN THICKNESS SHALL BE REINFORCED WITH #4 REBARS AT 16 INCHES ON CENTERS EACH WAY, UNLESS NOTED OTHERWISE. PROVIDE ONE (1) LAYER OF 6X6/W2.9XW2.9 WELDED WIRE FABRIC CONTINUOUS FOR EVERY 3" ARCHITECTURAL CONCRETE FILLS ABOVE THE STRUCTURAL SLAB.

13. ALL MECHANICAL, PLUMBING AND ELECTRICAL EQUIPMENT PADS LESS THAN 4" THICK SHALL BE REINFORCED WITH AT LEAST ONE (1) LAYER OF 6X6/W2.9XW2.9 WELDED WIRE FABRIC AND HAVE HOOKED DOWELS (#3 AT 12" ON CENTERS) INTO THE STRUCTURAL SLAB. UNLESS NOTED OTHERWISE. FOR PADS GREATER THAN 4 INCHES THICK, USE REINFORCING AS SHOWN IN THE TYPICAL DETAILS.

14. ADDITIONAL REINFORCEMENT SHALL BE PROVIDED AROUND ALL SLAB AND WALL OPENINGS INCLUDING DIAGONAL BARS WITHOUT EXCEPTION.

15. ALL STRUCTURAL CONCRETE ELEMENTS REQUIRE REINFORCEMENT SINCE NO PLAIN CONCRETE ELEMENTS ARE USED. ALL CONCRETE SLABS SHALL HAVE A MINIMUM REINFORCEMENT PERCENTAGE OF 0.0018 EACH WAY CONTINUOUS.

STRUCTURAL STEEL WELDING

1. ALL WELDING SHALL BE IN STRICT CONFORMANCE WITH THE LATEST EDITION OF AWS D1.1 AND THE 2022 CALIFORNIA BUILDING CODE.

2. ALL WELDING ELECTRODES (FILLER METAL) SHALL BE E7XXX (70 KSI), U.N.O., AND SHALL BE LOW HYDROGEN TYPES. FIELD WELDING OF FULL AND PARTIAL PENETRATION WELDS OF THE STEEL MOMENT FRAME CONNECTIONS BETWEEN MOMENT FRAME BEAMS AND MOMENT FRAME COLUMNS SHALL BE BY SHIELDED METAL ARC PROCESS USING LOW HYDROGEN ELECTRODES

3. ALL WELDS SHALL HAVE A FILLER METAL WITH CHARPY V-NOTCH TOUGHNESS OF 20 FT/LBS AVERAGE AT -20 DEGREES FAHRENHEIT AND 40 FT/LBS @ 70 DEGREES FAHRENHEIT. CERTIFY CONFORMANCE TO CHARPY V-NOTCH TOUGHNESS REQUIREMENTS WITH TESTS BY AN INDEPENDENT TESTING LABORATORY.

4. LENGTHS OF WELDS ARE EFFECTIVE LENGTHS AS SPECIFIED IN THE APPLICABLE CODE. WHERE LENGTH OF WELD IS NOT SHOWN IT SHALL BE FULL LENGTH OF JOINT. ALL BUTT WELDS SHALL BE FULL PENETRATION, UNLESS NOTED OTHERWISE.

5. CONTRACTOR SHALL PROVIDE FIELD WELDING AS REQUIRED FOR CONSTRUCTION. WHERE FIELD WELDING IS NOTED, THE DESIGNATION IS GIVEN AS A SUGGESTED CONSTRUCTION PROCEDURE ONLY.

6. ALL SHOP WELDS SHALL BE PERFORMED BY A LOS ANGELES CITY LICENSED FABRICATOR.

7. ALL WELDING SHALL BE PERFORMED BY AWS D1.1 CERTIFIED WELDER.

8. FACES OF FILLET WELDS EXPOSED TO VIEW SHALL HAVE AS-WELDED SURFACES THAT ARE REASONABLY SMOOTH AND UNIFORM. NO FINISHING OR GRINDING SHALL BE REQUIRED, EXCEPT WHERE CLEARANCES OR FIT OF OTHER ITEMS MAY SO NECESSITATE.

9. ALL PARTIAL AND FULL PENETRATION WELDS WHICH ARE EXPOSED TO VIEW SHALL BE GROUND SMOOTH AND FLUSH WITH FINISH SURFACE OF STEEL. HOLES SHALL BE FILLED WITH WELD METAL OR BODY SOLDER AND SMOOTHED BY GRINDING OR FILING.

10. CLEAN GROOVE PREPARATION THERMAL CUTS BY GRINDING.

11. WELDS SHALL BE TERMINATED AT THE END OF A JOINT IN A MANNER THAT WILL ENSURE SOUND WELDS. WHENEVER NECESSARY THIS SHALL BE DONE BY USE OF EXTENSION BARS AND RUN OFF TABS.

12. ALL WELDED JOINTS SHALL BE PRE-QUALIFIED PER THE LATEST EDITION OF AWS D1.1. NON PRE- QUALIFIED WELDED JOINTS SHALL BE QUALIFIED BY TEST & PROCEDURE QUALIFICATION TEST RECORD INCLUDED PER THE LATEST EDITION OF AWS D1.1.

13. THE CONTRACTOR SHALL SUBMIT ALL WELDING PROCEDURE SPECIFICATIONS (WPS) TO BE USED ON THE PROJECT PER THE LATEST EDITION OF AWS D1.1. THE WPS SHALL INCLUDE ALL MANUFACTURER'S DATA SHEETS FOR ALL WELDING MATERIALS TO BE USED. THE DATA SHEETS SHALL DESCRIBE THE PRODUCTS, LIMITATIONS OF USE, RECOMMENDED WELDING PARAMETERS, AND STORAGE AND EXPOSURE REQUIREMENTS.

14. ELECTRODES SHALL BE RECEIVED AND STORED IN THE ORIGINAL, UNDAMAGED MANUFACTURER PACKAGING, UNTIL READY FOR USE. WHEN WELDING IS TO BE SUSPENDED FOR MORE THAN 8 HOURS, ELECTRODES SHALL BE REMOVED FROM THE MACHINES AND STORED IN AN ELECTRODE WIRE OVEN MAINTAINED AT A TEMPERATURE BETWEEN 250 DEGREES AND 550 DEGREES OR AS RECOMMENDED BY THE MANUFACTURER. ELECTRODES NOT CONSUMED WITHIN 24 HOURS OF ACCUMULATED EXPOSURE OUTSIDE CLOSED OR HEATED STORAGE SHALL NOT BE USED.

15. ALL BOTTOM FLANGE BACKING BARS SHALL BE REMOVED. FOLLOWING REMOVAL OF BACKING, THE ROOT PASS SHALL BE BACKGOUGED TO SOUND WELD METAL AND BACKWELDED UNTIL FLUSH OR WITH SLIGHT REINFORCEMENT. THE SURFACE SHALL BE GROUND SMOOTH TO A SURFACE ROUGHNESS NOT TO EXCEED 500 MICROINCHES.

16. ALL WELDING SHALL HAVE CONTINUOUS INSPECTION BY AN AWS-CWI QUALIFIED INSPECTOR APPROVED BY DSA.

STRUCTURAL STEEL

1. FABRICATION AND ERECTION OF STRUCTURAL STEEL SHALL BE IN ACCORDANCE WITH THE LATEST EDITION OF AISC SPECIFICATIONS FOR STRUCTURAL STEEL BUILDINGS, AND THE LATEST EDITION OF AISC SEISMIC PROVISIONS FOR STRUCTURAL STEEL BUILDINGS. WHERE THE STRUCTURAL STEEL IS EXPOSED, FABRICATION AND ERECTION SHALL ALSO BE IN ACCORDANCE WITH AISC CODE OF STANDARD PRACTICE FOR ARCHITECTURALLY EXPOSED STRUCTURAL STEEL.

2. STRUCTURAL STEEL SHALL CONFORM TO ASTM DESIGNATION AS INDICATED BELOW (U.N.O.):

A. ALL WIDE FLANGE SHAPES	A992, GRADE 50
B. STEEL ANGLES	A36
C. ALL PLATES	A36
D. HSS (RECTANGULAR AND SQUARE)	A500, GRADE B
E. HSS (ROUND)	A500, GRADE B
F. PIPE COLUMNS	A53, GRADE B
G. CHANNELS (C AND MC SECTIONS)	A36
H. ALL OTHER STRUCTURAL SECTIONS	A572, GRADE 50
I. STEEL TO STEEL CONNECTION BOLTS	A325X
J. ANCHOR BOLTS	F1554 GR36 OR A36
K. THREADED RODS AND HANGER RODS	A36 OR A307-S1
L. NUTS FOR BOLTS AND MACHINE BOLTS	A563
M. HARDENED WASHERS	F436
N. UNHARDENED WASHERS	F844
O. PLAIN WASHERS	ANSI B18.22.1
P. BEVELED WASHERS	ANSI B18.23.1

3. ALL STEEL SHALL BE PROVIDED BY A CITY OF LOS ANGELES LICENSED FABRICATOR.

4. WHEN FABRICATING SIMPLY SUPPORTED BEAMS, PLACE NATURAL CAMBER UP.

5. SPLICE MEMBERS ONLY WHERE INDICATED.

6. HIGH STRENGTH BOLTS SHALL BE INSTALLED IN ACCORDANCE WITH THE LATEST EDITION OF AISC SPECIFICATIONS FOR STRUCTURAL JOINTS USING ASTM A325 OR A490 BOLTS. HIGH STRENGTH BOLTS SHALL BE BEARING TYPE WITH THREADS EXCLUDED FROM THE FROM THE SHEAR PLANES (I.E. A325-X) UNLESS NOTED OTHERWISE.

7. ALL BOLTED CONNECTIONS SHALL HAVE A MINIMUM OF TWO BOLTS UNLESS SHOWN OTHERWISE. MINIMUM SIZE OF BOLTS FOR STRUCTURAL STEEL CONNECTIONS SHALL BE 3/4" DIA. EXCEPT WHEN OTHERWISE SHOWN OR NOTED.

8. ALL HOLES SHALL BE STANDARD DIAMETER U.N.O.

9. ALL FLANGE STIFFENER PLATES SHALL BE ORIENTED SO THAT ROLLING DIRECTION OF PLATE IS PARALLEL WITH DIRECTION OF PRINCIPAL STRESS.

10. AFTER FABRICATION, ALL STEEL SHALL BE CLEANED FREE OF RUST, LOOSE MILL SCALE AND OIL.

11. PROVIDE FILLS AT SPLICES OF PARTS HAVING MORE THAN 1/8" DIFFERENCE IN THICKNESS.

12. PROVIDE BEVELED WASHERS ON ALL CONNECTIONS WHERE SLOPE SURFACE EXCEEDS 1:20.

13. HEADED ANCHOR STUDS AND THREADED STUDS SHALL BE NELSON GRANULAR FLUX-FILLED, AND SHALL BE MADE FROM COLD FINISHED LOW CARBON STEEL, CONFORMING TO A-108, GRADES 1015 - 1020 WITH A MINIMUM TENSILE STRENGTH OF 60,000 PSI. (COLA RR 2729). STUD WELDING INSPECTION AND TESTING SHALL CONFORM TO AWS D1.1.

14. DEFORMED BAR ANCHOR STUDS SHALL BE NELSON D2L GRANULAR FLUX-FILLED REBAR STUDS OR APPROVED EQUAL, AND SHALL BE MADE OF LOW CARBON COLD ROLLED STEEL WITH A MINIMUM TENSILE STRENGTH OF 80,000 PSI. STUD WELDING INSPECTION AND TESTING SHALL CONFORM TO AWS D1.1.

15. HOT DIP GALVANIZE IN ACCORDANCE WITH ASTM A123 AND ASTM A153 STRUCTURAL STEEL AND FASTENERS THAT ARE PERMANENTLY EXPOSED TO THE WEATHER. REPAIR GALVANIZING AFTER WELDING IN ACCORDANCE WITH ASTM A780.

16. THE FULL DESIGN AND LOAD CARRYING CAPACITY OF THE STEELWORK SHALL NOT BE IMPAIRED DUE TO FABRICATION, SHIPMENT, OR ERECTION PROCEDURES, THROUGHOUT THE COMPLETE PROCESS. THE STABILITY OF ALL INDIVIDUAL MEMBERS AND ASSEMBLIES SHALL BE MAINTAINED.

17. THE CONTRACTOR SHALL BE RESPONSIBLE FOR THE CONTROL OF ALL ERECTION PROCEDURES AND SEQUENCES WITH RELATION TO TEMPERATURE DIFFERENTIALS AND WELD SHRINKAGE.

18. ALL ADDITIONAL STEEL REQUIRED FOR ERECTION PURPOSES SHALL BE PROVIDED AT NO ADDITIONAL COST AND SHALL BE REMOVED UNLESS APPROVED BY THE OWNER'S REPRESENTATIVE IN WRITING.

GENERAL

1. ALL NEW CONSTRUCTION SHALL COMPLY WITH THE CONTRACT DOCUMENTS AND THE 2022 CALIFORNIA BUILDING CODE.

2. REFERENCE TO CODES, RULES, REGULATIONS, STANDARDS, MANUFACTURER'S INSTRUCTIONS OR REQUIREMENTS OF REGULATORY AGENCIES IS TO THE LATEST PRINTED EDITION OF EACH IN EFFECT AT THE DATE OF SUBMISSION OF BID UNLESS THE DOCUMENT DATE IS SHOWN.

3. TYPICAL DETAILS AND GENERAL NOTES APPLY TO ALL PARTS OF THE WORK EXCEPT WHERE SPECIFICALLY DETAILED OR UNLESS NOTED OTHERWISE (U.N.O.)

4. THE STRUCTURAL DRAWINGS ILLUSTRATE THE NEW STRUCTURAL MEMBERS. REFER TO ARCHITECTURAL, MECHANICAL AND ELECTRICAL DRAWINGS FOR NON-STRUCTURAL ITEMS WHICH REQUIRE SPECIAL PROVISIONS DURING THE CONSTRUCTION OF THE STRUCTURAL MEMBERS.

5. REFER TO ARCHITECTURAL DRAWINGS FOR FLOOR DEPRESSIONS, EDGE OF SLAB, OPENINGS, SLOPES, DRAINS, CURBS, PADS, EMBEDDED ITEMS, NON-BEARING PARTITIONS, ETC. REFER TO MECHANICAL AND ELECTRICAL DRAWINGS FOR SLEEVES, OPENINGS, AND HANGERS FOR PIPES, DUCTS AND EQUIPMENT.

6. THE CONTRACTOR SHALL VERIFY AND BE RESPONSIBLE FOR COORDINATING THE WORK OF ALL TRADES AND SHALL VERIFY ALL DIMENSIONS AND CONDITIONS WHICH IMPACT THE WORK. FIELD VERIFY SIZES, ELEVATIONS, HOLE LOCATIONS, ETC. PRIOR TO FABRICATION.

7. DRAWING DIMENSIONS ARE TO FACE OF STRUCTURE, JOINT CENTERLINE OR COLUMN GRID CENTERLINE UNLESS NOTED OTHERWISE. DO NOT SCALE THE DRAWINGS.

8. CONTRACTOR SHALL CAREFULLY REVIEW THE DRAWINGS TO IDENTIFY THE SCOPE OF WORK REQUIRED. VISIT THE SITE TO RELATE THE SCOPE OF WORK TO EXISTING CONDITIONS AND DETERMINE THE EXTENT TO WHICH THOSE CONDITIONS AND PHYSICAL SURROUNDINGS WILL IMPACT THE WORK.

9. EXISTING CONDITIONS AS SHOWN ON THESE PLANS ARE FOR REFERENCE ONLY. CONTRACTOR IS REQUIRED TO FIELD VERIFY ALL EXISTING CONDITIONS PRIOR TO CONSTRUCTION. CONTRACTOR SHALL REPORT CONDITIONS THAT CONFLICT WITH THE CONTRACT DOCUMENTS TO THE OWNER'S REPRESENTATIVE. DO NOT DEVIATE FROM THE CONTRACT DOCUMENTS WITHOUT WRITTEN DIRECTION FROM THE OWNER'S REPRESENTATIVE.

10. THE CONTRACTOR SHALL RESOLVE ANY CONFLICTS ON THE DRAWINGS OR IN THE SPECIFICATIONS WITH THE DESIGN TEAM BEFORE PROCEEDING WITH THE WORK.

11. ANY DEVIATION, MODIFICATION & SUBSTITUTION FROM THE APPROVED SET OF STRUCTURAL DRAWINGS SHALL BE SUBMITTED TO THE OWNER'S REPRESENTATIVE FOR REVIEW/APPROVAL PRIOR TO ITS USE OR INCLUSION ON THE SHOP DRAWINGS & PRIOR TO PROCEEDING WITH THE WORK.

12. THE CONTRACTOR SHALL PROVIDE ALL NECESSARY SHORES, BRACES, GUYS, HOIST BEAM, REQUIRED TO SUPPORT ALL LOADS TO WHICH THE BUILDING STRUCTURE AND COMPONENTS, SOILS, OTHER STRUCTURES AND UTILITIES MAY BE SUBJECTED DURING CONSTRUCTION. SHORING SYSTEMS SHALL BE DESIGNED AND STAMPED BY A CIVIL ENGINEER LICENSED IN THE STATE OF CALIFORNIA. VISITS TO THE SITE BY THE OWNER'S REPRESENTATIVE WILL NOT INCLUDE OBSERVATION OF THE ABOVE NOTED ITEMS.

13. THE CONTRACTOR SHALL PROVIDE MEANS, METHOD, TECHNIQUES, SEQUENCE AND PROCEDURE OF CONSTRUCTION AS REQUIRED. SITE VISITS PERFORMED BY THE OWNER'S REPRESENTATIVE DO NOT INCLUDE INSPECTIONS OF MEANS AND METHODS OF CONSTRUCTION PERFORMED BY CONTRACTOR.

14. THE CONTRACTOR SHALL PROTECT ALL WORK, MATERIALS AND EQUIPMENT FROM DAMAGE AND SHALL PROVIDE PROPER STORAGE FACILITIES FOR MATERIALS AND EQUIPMENT DURING CONSTRUCTION.

15. A COPY OF ANY REQUIRED ICC-ES REPORT AND/OR CONDITIONS OF LISTING SHALL BE MADE AVAILABLE AT THE JOB SITE.

16. ATTACHMENT OF NON-STRUCTURAL COMPONENTS SPECIFIED BY OTHERS TO STRUCTURAL ELEMENTS SHALL BE SPECIFIED BY THE NON-STRUCTURAL COMPONENT DESIGNER/SPECIFIER/INSTALLER. DESIGNER OF NON-STRUCTURAL ELEMENTS SHALL AT A MINIMUM SPECIFY THE CONNECTION TO THE STRUCTURE INCLUDING BUT NOT LIMITED TO: ANY TYPE OF CONNECTING HARDWARE, WIRE, HANGERS, FASTENERS, CLIPS, UNISTRUT MEMBERS. NON STRUCTURAL ELEMENTS SHALL INCLUDE, BUT NOT LIMITED TO: MEP AND HVAC EQUIPMENT & THEIR SUPPORTING PADS, PLATFORMS, FRAMES, ETC.; DUCTWORK, PIPES, CONDUITS, ARTWORK, GRILLES, GRATING, METAL SCREENS, ELEVATOR RAILS, STONE FINISH TILES, STONE CAPS, BRICK VENEER.

17. ALLOW FOURTEEN WORKING DAYS FOR PROCESSING SHOP DRAWINGS AND SUBMITTALS AFTER RECEIPT.

DESIGN CRITERIA

1. BUILDING SHALL COMPLY WITH THE 2022 CALIFORNIA BUILDING CODE.

2. VERTICAL LIVE LOADS:
   A. RAMPS/STAIRS 100 PSF

3. LATERAL LOADS:
   A. WIND:
      BASIC WIND SPEED: 95 MPH
      WIND IMPORTANCE FACTOR, Iw: 1.0
      EXPOSURE TYPE: C

   B. SEISMIC:
      SITE CLASS: D
      RISK CATEGORY: II
      SEISMIC DESIGN CATEGORY: D (DEFAULT)
      SEISMIC IMPORTANCE FACTOR, Ie: 1.0
      S_S = 1.993
      S_1 = 0.749
      S_{DS} = 1.594
      S_{D1} = 0.849

DIVISION OF THE STATE ARCHITECT

IDENTIFICATION STAMP
DIV. OF THE STATE ARCHITECT
APP: 03-124589 INC:
REVIEWED FOR
SS ☑ FLS ☑ ACS ☑
DATE: 04/15/2025

VENTURA COUNTY COMMUNITY COLLEGE DISTRICT
761 EAST DAILY DRIVE
CAMARILLO, CALIFORNIA 93010
TEL: (805) 652-5500

PROJECT TITLE AND SCHOOL LOCATION

VENTURA COMMUNITY COLLEGE STEM MODULAR BUILDING
VENTURA COMMUNITY COLLEGE
4667 TELEGRAPH RD.
VENTURA, CA 93003

COMMISSIONED ARCHITECT

AMADOR

amador whittle architects, inc.
28328 AGOURA RD. 203 | AGOURA HILLS CA, 91301| 805-558-4334

CONSULTANT

Orion Structural
ORION STRUCTURAL GROUP, INC.
223 East Thousand Oaks Boulevard, Suite 304
Thousand Oaks, CA 91360
Phone: (805) 750-8136 Fax: (805) 494-0418

OSG# 22604.010

STAMPS/SEALS

REGISTERED PROFESSIONAL ENGINEER
WILL A. LAMBERT
No. 5430
Exp. 06/30/2026
STRUCTURAL
STATE OF CALIFORNIA

3/6/2025

LICENSED ARCHITECT
WILLIAM BRUCE AMADOR
C-20348
JANUARY 31, 2027
RENEWAL DATE
STATE OF CALIFORNIA

DSA V3 SUBMITTAL 03/21/2025

SHEET TITLE:

GENERAL NOTES

PROJECT NO: 22-VCCCD-08	PROJECT ARCH: BA
DRAWN: MG	CHECKED: EN
SHEET NUMBER: S000	
DATE: 3/6/25	SHEET: ___ OF ___

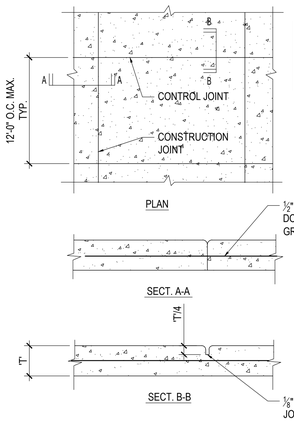

NOTE:
CONTRACTOR SHALL LOCATE JOINTS ALONG COLUMN LINES WHENEVER POSSIBLE.

TYPICAL SLAB ON GRADE DETAIL

SCALE: 1"=1'-0" | 10

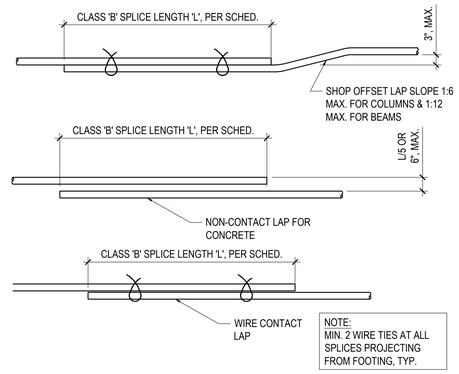

NOTE:
MIN. 2 WIRE TIES AT ALL SPLICES PROJECTING FROM FOOTING, TYP.

NOTES:

1. TOP BARS ARE HORIZONTAL REINFORCING WITH MORE THAN 12" OF CONCRETE BELOW BARS.
2. BOTTOM BARS INCLUDE ALL VERTICALS, ALL HORIZONTAL WALL REINFORCING, AND HORIZONTAL REINFORCING WITH LESS THAN 12" OF CONCRETE BELOW BARS.
3. A. USE CLASS B SPLICES U.N.O., ADJACENT BAR SPLICES SHALL BE STAGGERED THE GREATER OF THE LENGTH OF SPLICE OR 2'-0".
   B. USE CLASS C SPLICES WHERE NOTED.
   C. USE CLASS C SPLICES WHERE MORE THAN 49% OF BARS ARE TO BE SPLICED IN ONE LOCATION.
4. SMALLER BAR LAP LENGTH SHALL BE USED WHEN SPLICING DIFFERENT SIZE BARS.
5. INCREASE SPLICE LENGTH BY 33% FOR LIGHTWEIGHT CONCRETE.

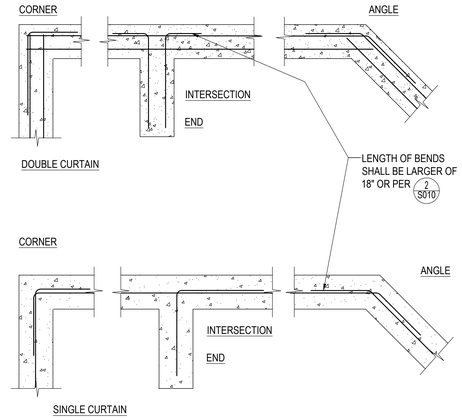

REBAR AT INTERSECTION

SCALE: 1"=1'-0" | 4

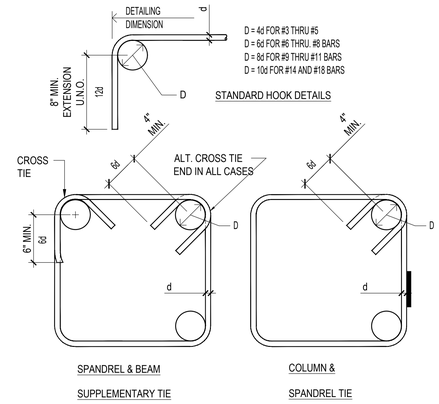

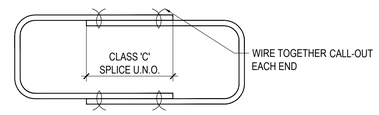

TIE LAP DETAIL

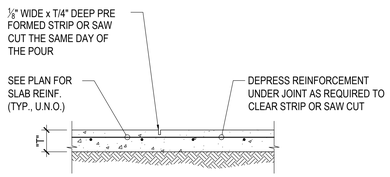

CONTROL JOINT (WHERE CONTINOUS POUR IS USED) (A)

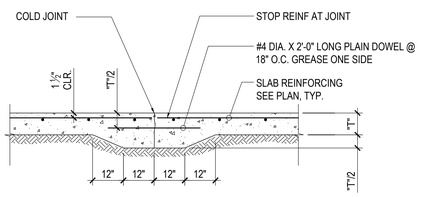

TYPICAL CONSTRUCTION JOINT (B)

NOTE:

1. CONTROL JOINTS TO BE LOCATED AT COLUMN CENTER LINES AND AT 20'-0" O.C. MAX. AND EVERY 400 SQUARE FEET.
2. IF SAW-CUT CONTROL JOINT TO BE USED, SAW-CUT WITHIN 24 HOURS OF POUR.
3. SEE PLAN FOR "T".

JOINTS AT SLAB ON GRADE

SCALE: 1"=1'-0" | 12

BAR DEVELOPMENT LENGTH (Ld) SCHEDULE

BAR SIZE	Fc' = 3000 psi		Fc' = 4000 psi		Fc' = 4500 psi			
	TOP BARS	OTHER BARS	TOP BARS	OTHER BARS	TOP BARS	OTHER BARS		
#3	22"	17"	19"	15"	18"	15"		
#4	29"	22"	25"	19"	24"	27"		
#5	36"	28"	31"	24"	30"	23"		
#6	43"	33"	37"	29"	35"	27"		
#7	63"	48"	54"	42"	51"	40"		
#8	72"	55"	62"	48"	59"	45"		
#9	81"	62"	70"	54"	66"	51"		
#10	90"	69"	78"	60"	73"	56"		
#11	98"	76"	85"	66"	80"	62"		

CLASS 'B' SPLICE LENGTH

BAR SIZE	Fc' = 3000 psi		Fc' = 4000 psi		Fc' = 4500 psi			
	TOP BARS	OTHER BARS	TOP BARS	OTHER BARS	TOP BARS	OTHER BARS		
#3	28"	22"	25"	20"	23"	20"		
#4	38"	29"	33"	25"	31"	24"		
#5	47"	36"	41"	31"	38"	30"		
#6	56"	43"	49"	37"	46"	35"		
#7	81"	63"	71"	54"	67"	51"		
#8	93"	72"	81"	62"	76"	59"		
#9	105"	81"	91"	70"	86"	66"		
#10	116"	90"	101"	78"	95"	73"		
#11	128"	98"	111"	85"	104"	80"		

NOTES:

1. MINIMUM SPLICE LENGTH FOR BARS WITH CLASS 'B' SPLICE PER ACI-318-19, SECTION 12.2.
2. TOP BARS ARE HORIZONTAL BARS WITH MORE THAN 12" CONCRETE CAST IN THE MEMBER BOLOW THE REINFORCEMENT.
3. THESE BAR DEVELOPMENT LENGTH APPLY TO REGULAR OR NORMAL WEIGHT CONCRETE, MULTIPLY THE SPECIFIED DEVELOPMENT LENGTH BY 1.33 FOR LIGHT WEIGHT CONCRETE.
4. ALL DETAILING OF REINFORCEMENT SHALL COMPLY WITH THESE SCHEDULES UNLESS SPECIFICALLY DETAILED ON THE DRAWINGS.

TYP. REINF. DEVELOPMENT LENGTH & LAP SPLICE SCHEDULE

SCALE: 1"=1'-0" | 9

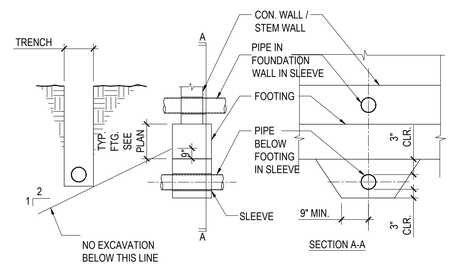

NOTE:

NO PIPE OR CONDUIT SHALL PASS HORIZONTALLY THROUGH FOOTING. PROVIDE SLEEVE MIN. 1" Ø LARGER THAN PIPE OR 1" FOAM WRAP.

PIPE OR CONDUIT AT FOOTING

SCALE: 1"=1'-0" | 5

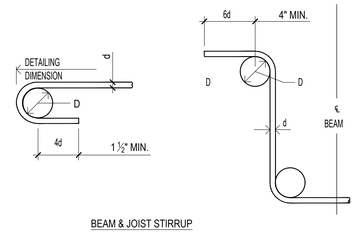

BEAM & JOIST STIRRUP

TYPICAL STANDARD HOOK DETAIL

SCALE: 1"=1'-0" | 2

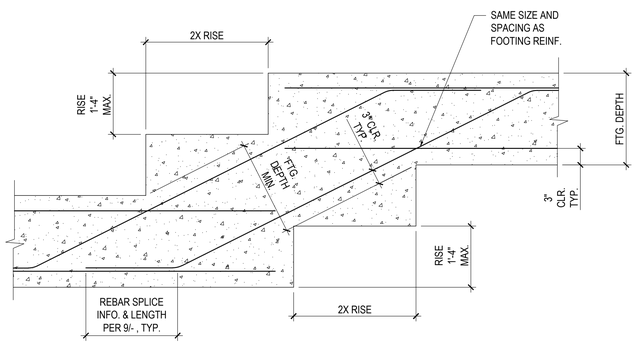

TYPICAL STEPPED FOOTING

SCALE: 1"=1'-0" | 3

DIVISION OF THE STATE ARCHITECT

IDENTIFICATION STAMP
DIV. OF THE STATE ARCHITECT
APP: 03-124589 INC:
REVIEWED FOR
SS ☑ FLS ☑ ACS ☑
DATE: 04/15/2025

VENTURA COUNTY COMMUNITY COLLEGE DISTRICT
761 EAST DAILY DRIVE
CAMARILLO, CALIFORNIA 93010
TEL: (805) 652-5500

PROJECT TITLE AND SCHOOL LOCATION

VENTURA COMMUNITY COLLEGE STEM MODULAR BUILDING
VENTURA COMMUNITY COLLEGE
4667 TELEGRAPH RD.
VENTURA, CA 93003

COMMISSIONED ARCHITECT

AMADOR
amador whitte architects, inc.
28328 AGOURA RD. 203 | AGOURA HILLS CA. 91301 | 805-558-4334

CONSULTANT

Orion Structural
ORION STRUCTURAL GROUP, INC.
223 East Thousand Oaks Boulevard, Suite 304
Thousand Oaks, CA 91360
Phone# (805)750-8136 Fax# (805)494-0418

OSG# 22604.010

STAMPS/SEALS

REGISTERED PROFESSIONAL ENGINEER
WILL A. LAMOREY
No. 5430
Exp. 06/30/2026
STRUCTURAL
STATE OF CALIFORNIA
3/6/2025

LICENSED ARCHITECT
WILLIAM JORGE AMADOR
C-20348
JANUARY 31, 2027
RENEWAL DATE
STATE OF CALIFORNIA

DSA V3 SUBMITTAL 03/21/2025

SHEET TITLE:

TYPICAL DETAILS

PROJECT NO: 22-VCCCD-08	PROJECT ARCH: BA
DRAWN: MG	CHECKED: EN

SHEET NUMBER:

S010

DATE: 03/06/25 | SHEET: ___ OF ___

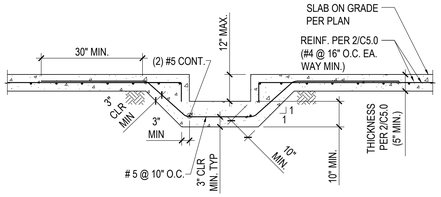

SECTION AT 12" MAX. TRENCH DRAIN (A)

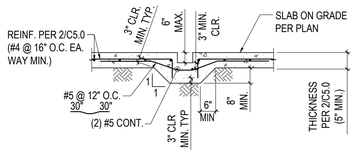

SECTION AT 6" MAX. TRENCH DRAIN (B)

TRENCH DRAIN DETAIL — SCALE: 1"=1'-0" — 22

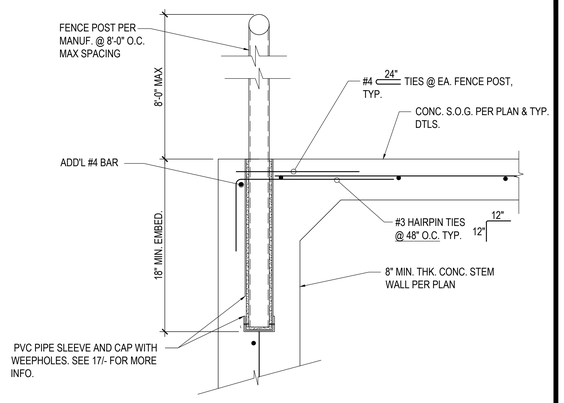

FENCE POST ANCHORAGE AT CONC. WALL — SCALE: 1"=1'-0" — 19

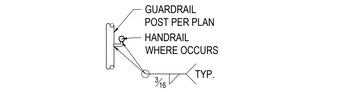

HANDRAIL TO POST (A)

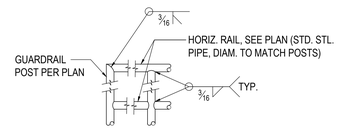

TYPICAL RAILING MEMBER ATTACHMENTS (B)

TYPICAL RAILING CONNECTIONS — SCALE: 1"=1'-0" — 16

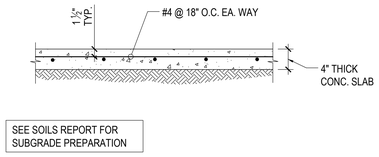

TYPICAL SLAB ON GRADE — SCALE: 1"=1'-0" — 13

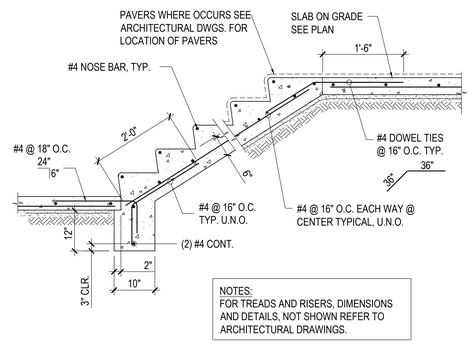

NOTES:
FOR TREADS AND RISERS, DIMENSIONS AND DETAILS, NOT SHOWN REFER TO ARCHITECTURAL DRAWINGS.

STAIR ON GRADE DETAIL — SCALE: 1"=1'-0" — 23

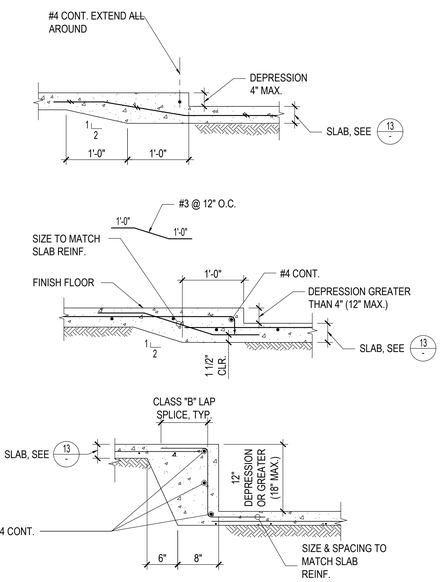

SLAB ON GRADE DEPRESSION — SCALE: 1"=1'-0" — 20

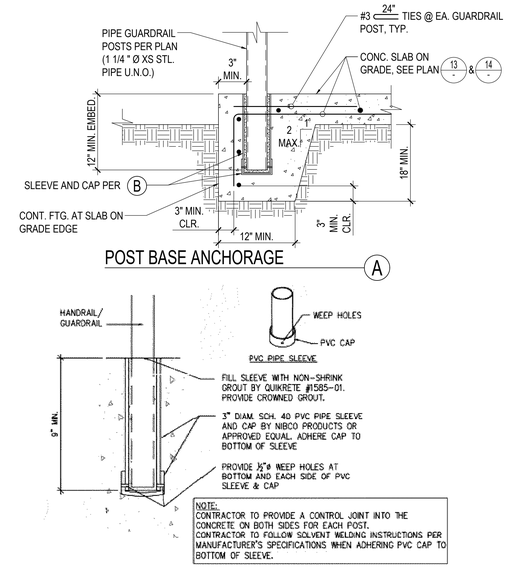

NOTE:
CONTRACTOR TO PROVIDE A CONTROL JOINT INTO THE CONCRETE ON BOTH SIDES FOR EACH POST. CONTRACTOR TO FOLLOW SOLVENT WELDING INSTRUCTIONS PER MANUFACTURER'S SPECIFICATIONS WHEN ADHERING PVC CAP TO BOTTOM OF SLEEVE.

POST BASE ANCHORAGE (A)

BOTTOM OF POST SLEEVE AND CAP (B)

GUARDRAIL AT CONCRETE SLAB ON GRADE — SCALE: 1"=1'-0" — 17

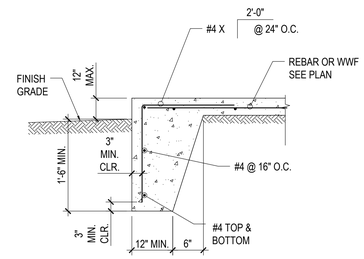

SLAB ON GRADE EDGE DETAIL — SCALE: 1"=1'-0" — 14

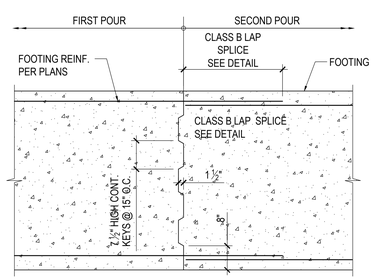

PLAN VIEW

NOTE :
WELDED SPLICES REQUIRED FOR #14 AND LARGER BARS. WHERE CONTINUOUS FOOTING IS UNDER A WALL, LOCATE CONSTRUCTION JOINT AT 1/4 OF THE CLEAR OPENING WIDTH ABOVE FROM FACE OF OPENING, OR IN MIDDLE 1/3 OF THE DISTANCE BETWEEN COLUMNS.

CONT. FTG. CONSTRUCTION JOINT — SCALE: 1"=1'-0" — 24

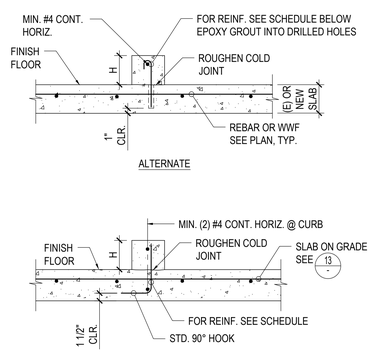

CURB REINFORCING SCHEDULE		
MAX. "H"	VERTICAL	HORIZ.
8"	#3 @ 18"	
18"	#4 @ 18"	
4'-0"	#4 @ 12"	#4 @ 12"

REINF. TO BE PLACED IN CURB WALL ℄

NOTE:
1. SEE ARCH'L. DWGS FOR CURB LOCATION & SIZE

CONCRETE CURB DETAIL — SCALE: 1"=1'-0" — 21

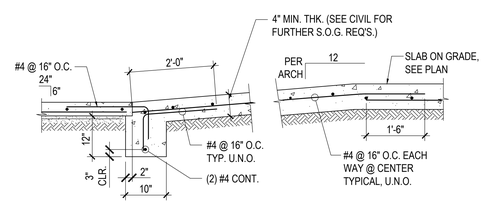

NOTES:
FOR DIMENSIONS AND DETAILS NOT SHOWN, REFER TO ARCHITECTURAL & CIVIL DRAWINGS.

TYPICAL RAMP ON GRADE DETAIL — SCALE: 1"=1'-0" — 18

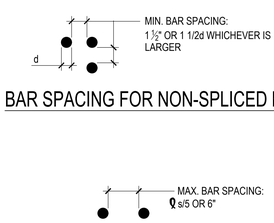

BAR SPACING FOR NON-SPLICED BARS (A)

BAR SPACING FOR BARS SPLICED W/ NON-CONTACT LAP (B)

BAR SPACING — SCALE: 1"=1'-0" — 15

DIVISION OF THE STATE ARCHITECT

IDENTIFICATION STAMP
DIV. OF THE STATE ARCHITECT
APP: 03-124589 INC:
REVIEWED FOR
SS ☑ FLS ☑ ACS ☑
DATE: 04/15/2025

VENTURA COUNTY COMMUNITY COLLEGE DISTRICT
761 EAST DAILY DRIVE
CAMARILLO, CALIFORNIA 93010
TEL: (805) 652-5500

PROJECT TITLE AND SCHOOL LOCATION

VENTURA COMMUNITY COLLEGE STEM MODULAR BUILDING
VENTURA COMMUNITY COLLEGE
4667 TELEGRAPH RD.
VENTURA, CA 93003

COMMISSIONED ARCHITECT

AMADOR

amador whittle architects, inc.
28328 AGOURA RD. 203 | AGOURA HILLS CA. 91301| 805-558-4334

CONSULTANT

Orion Structural

ORION STRUCTURAL GROUP, INC.
223 East Thousand Oaks Boulevard, Suite 304
Thousand Oaks, CA 91360
Phone (805)750-8136 Fax (805)494-0418

OSG# 22604.010

STAMPS/SEALS

REGISTERED PROFESSIONAL ENGINEER
WILL A. LAMOREE
No. 5430
Exp. 06/30/2026
STRUCTURAL
STATE OF CALIFORNIA

3/6/2025

LICENSED ARCHITECT
WILLIAM JORGE AMADOR
C-20348
JANUARY 31, 2027
RENEWAL DATE
STATE OF CALIFORNIA

DSA V3 SUBMITTAL 03/21/2025

SHEET TITLE:

TYPICAL DETAILS

PROJECT NO: 22-VCCCD-08	PROJECT ARCH: BA
DRAWN: MG	CHECKED: EN
SHEET NUMBER: S011	
DATE: 3/6/25	SHEET: ___ OF ___

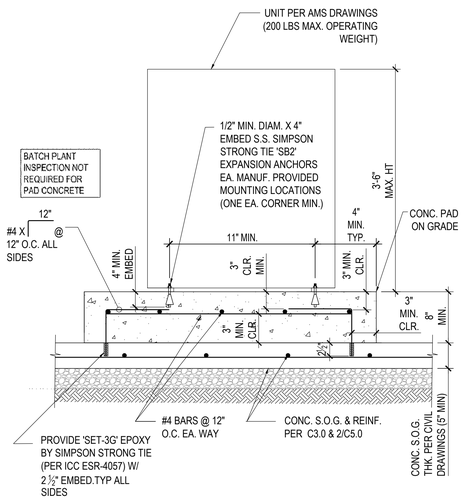

CONCRETE PAD AND UNIT ANCHORAGE

NTS | 34

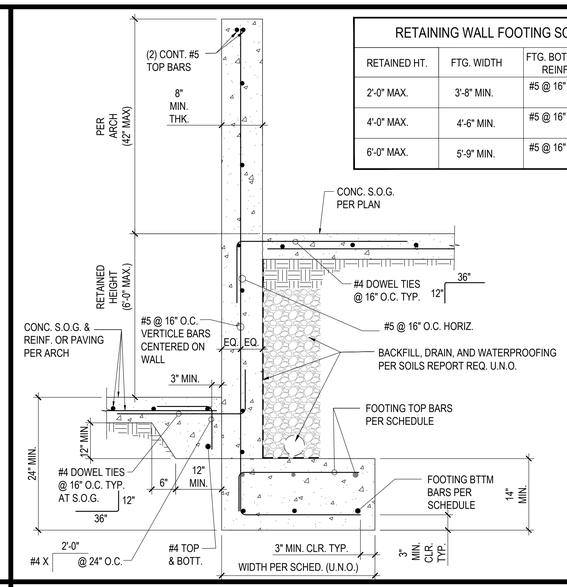

RETAINING WALL FOOTING SCHEDULE

RETAINED HT.	FTG. WIDTH	FTG. BOTTOM REINF.	FTG. TOP REINF.
2'-0" MAX.	3'-8" MIN.	#5 @ 16" O.C.	#6 @ 16" O.C. EA. WAY
4'-0" MAX.	4'-6" MIN.	#5 @ 16" O.C.	#6 @ 16" O.C. EA. WAY
6'-0" MAX.	5'-9" MIN.	#5 @ 16" O.C.	#6 @ 16" O.C. EA. WAY

RETAINING WALL WITH FREESTANDING WALL ABV.

NTS | 31

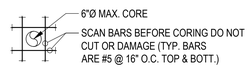

PLAN VIEW

TYP CONC SLAB ON GRADE CORE

NTS | 28

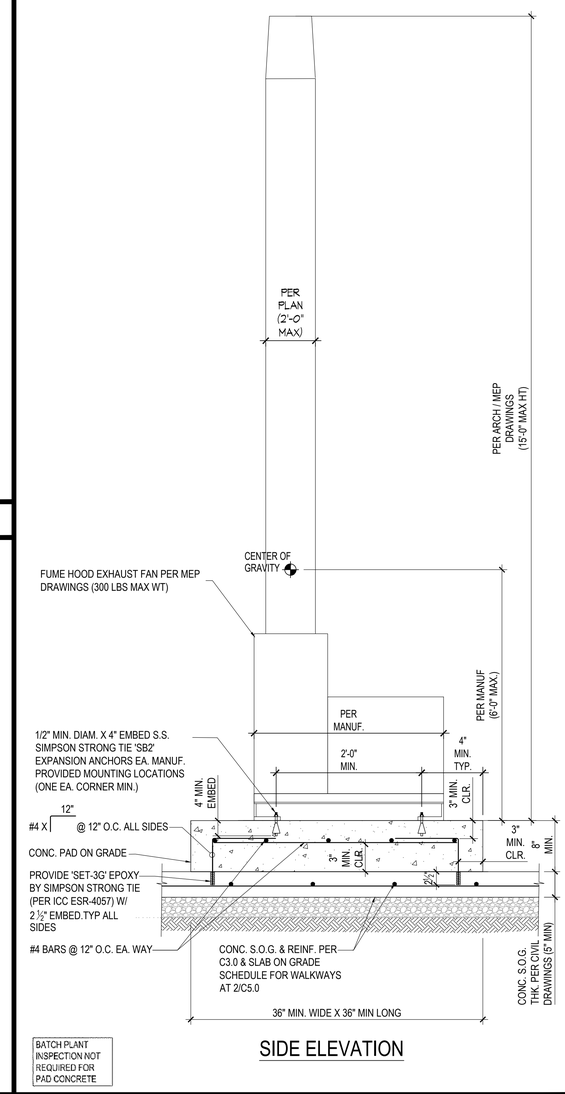

SIDE ELEVATION

FUME HOOD EXHAUST FAN ANCHORAGE DETAIL

SCALE: 1"=1'-0" | 26

NTS | 35

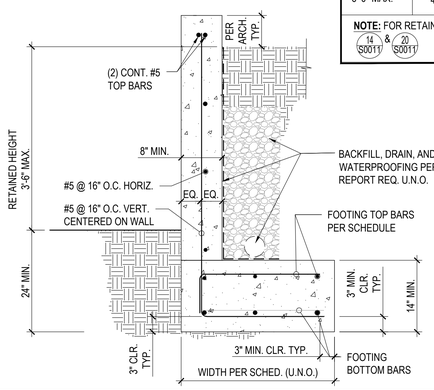

RETAINING WALL FOOTING SCHEDULE

RETAINED HT.	FTG. WIDTH	FTG. BOTTOM REINF.	FTG. TOP REINF.
2'-0" MAX.	2'-0" MIN.	#5 @ 16" O.C.	#6 @ 16" O.C. EA. WAY
4'-0" MAX.	3'-0" MIN.	#5 @ 16" O.C.	#6 @ 16" O.C. EA. WAY
6'-0" MAX.	4'-0" MIN.	#5 @ 16" O.C.	#6 @ 16" O.C. EA. WAY

NOTE: FOR RETAININED HEIGHT LESS THAN 12", SEE 14/S0011 & 20/S0011

TYPICAL SITE RETAINING WALL

SCALE: 1"=1'-0" | 32

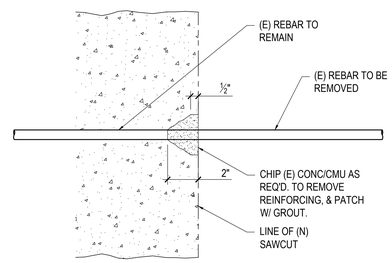

TYP. BAR TERMINATION

SCALE: 1"=1'-0" | 29

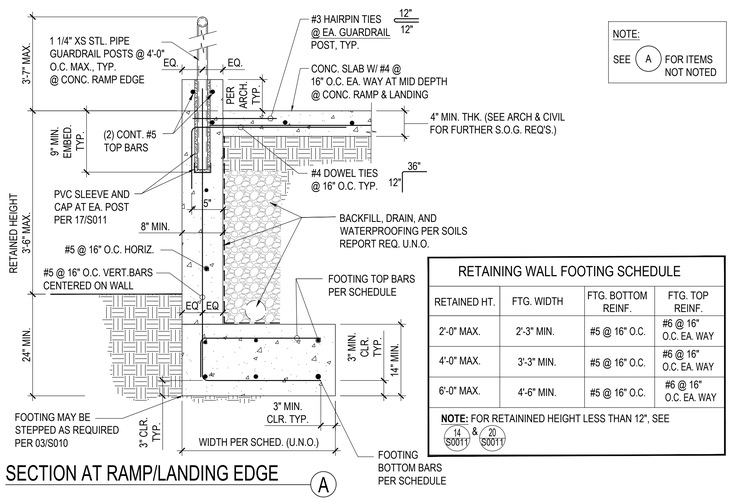

SECTION AT RAMP/LANDING EDGE (A)

NOTE:
SEE (A) FOR ITEMS NOT NOTED

RETAINING WALL FOOTING SCHEDULE

RETAINED HT.	FTG. WIDTH	FTG. BOTTOM REINF.	FTG. TOP REINF.
2'-0" MAX.	2'-3" MIN.	#5 @ 16" O.C.	#6 @ 16" O.C. EA. WAY
4'-0" MAX.	3'-3" MIN.	#5 @ 16" O.C.	#6 @ 16" O.C. EA. WAY
6'-0" MAX.	4'-6" MIN.	#5 @ 16" O.C.	#6 @ 16" O.C. EA. WAY

NOTE: FOR RETAININED HEIGHT LESS THAN 12", SEE 14/S0011 & 20/S0011

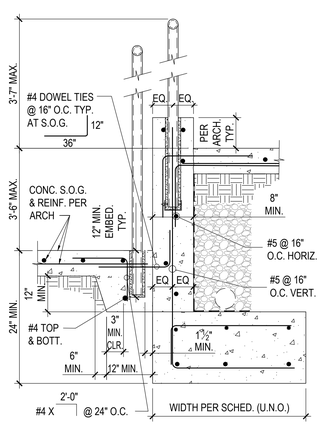

SECTION AT RAMP (B)

TYPICAL SECTION AT CONCRETE RAMP & LANDING ON GRADE

SCALE: 1"=1'-0" | 33

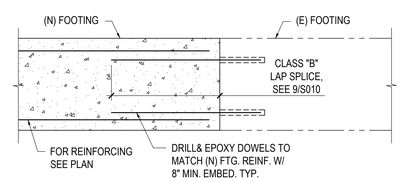

TYP. (N) FTG. TO (E) FTG.

SCALE: 1"=1'-0" | 30

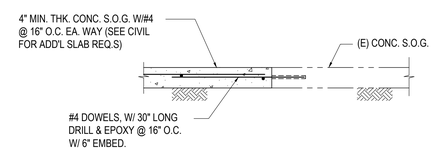

TYP. (N) S.O.G. TO (E) S.O.G.

SCALE: 1"=1'-0" | 27

DIVISION OF THE STATE ARCHITECT

IDENTIFICATION STAMP
DIV. OF THE STATE ARCHITECT
APP: 03-124589 INC:
REVIEWED FOR
SS ☑ FLS ☑ ACS ☑
DATE: 04/15/2025

VENTURA COUNTY COMMUNITY COLLEGE DISTRICT
761 EAST DAILY DRIVE
CAMARILLO, CALIFORNIA 93010
TEL: (805) 652-5500

PROJECT TITLE AND SCHOOL LOCATION

VENTURA COMMUNITY COLLEGE STEM MODULAR BUILDING
VENTURA COMMUNITY COLLEGE
4667 TELEGRAPH RD.
VENTURA, CA 93003

COMMISSIONED ARCHITECT

AMADOR
amador whittle architects, inc.
28328 AGOURA RD. 203 | AGOURA HILLS CA. 91301 | 805-558-4334

CONSULTANT

Orion Structural
ORION STRUCTURAL GROUP, INC.
223 East Thousand Oaks Boulevard, Suite 304
Thousand Oaks, CA 91360
Phone# (805)750-8136 Fax# (805)494-0418

OSG# 22604.010

STAMPS/SEALS

REGISTERED PROFESSIONAL ENGINEER
WILL A. LAMOREY
No. 5430
Exp. 06/30/2026
STRUCTURAL
STATE OF CALIFORNIA
3/6/2025

LICENSED ARCHITECT
WILLIAM JORGE AMADOR
C-20348
JANUARY 31, 2027
RENEWAL DATE
STATE OF CALIFORNIA

DSA V3 SUBMITTAL 03/21/2025

SHEET TITLE:

TYPICAL DETAILS

PROJECT NO.: 22-VCCCD-08	PROJECT ARCH: BA
DRAWN: MG	CHECKED: EN

SHEET NUMBER:

S012

DATE: 3/6/25 | SHEET: ___ OF ___

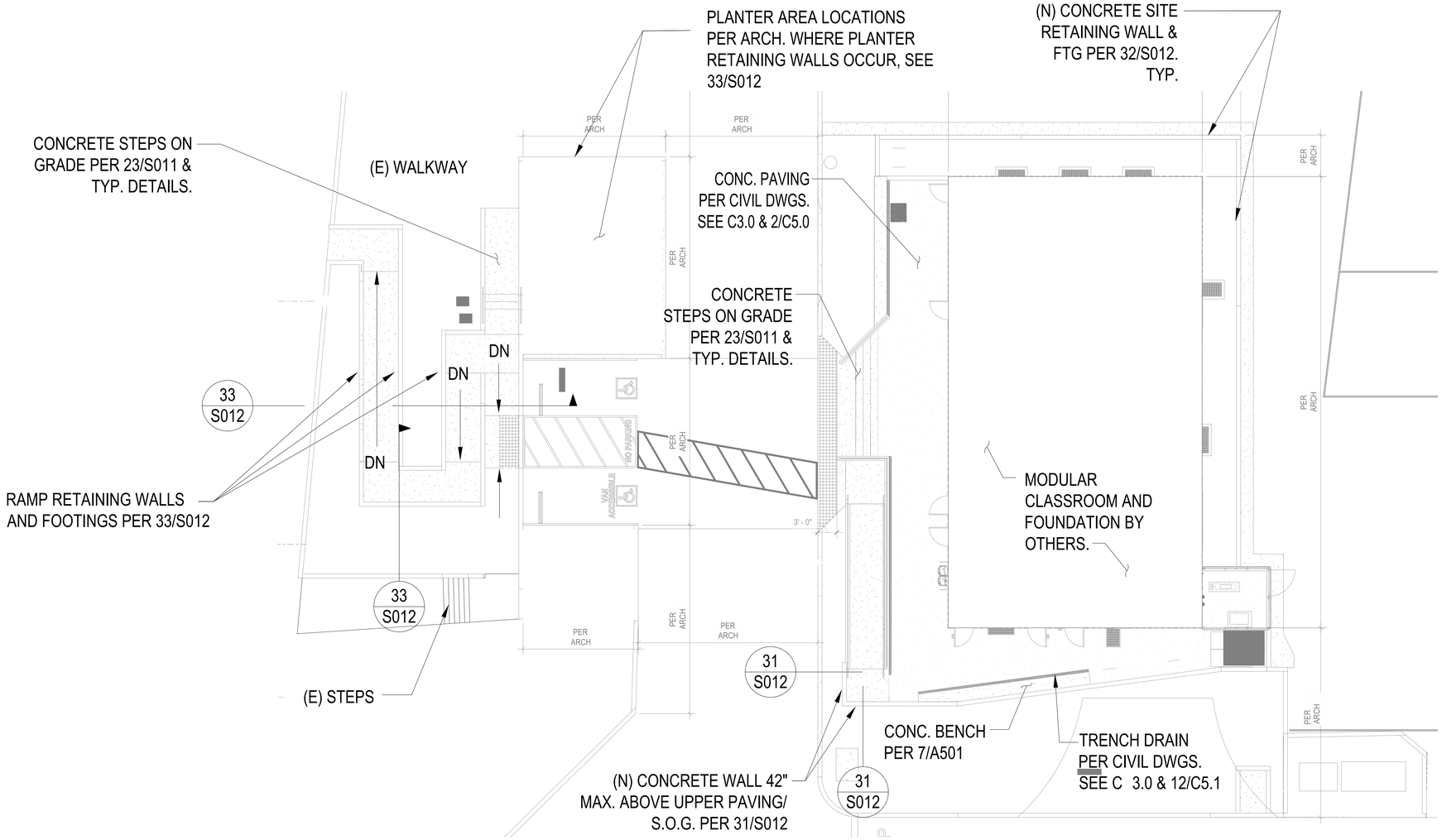

1 PARTIAL FOUNDATION PLAN
1/8" = 1'-0"

NORTH

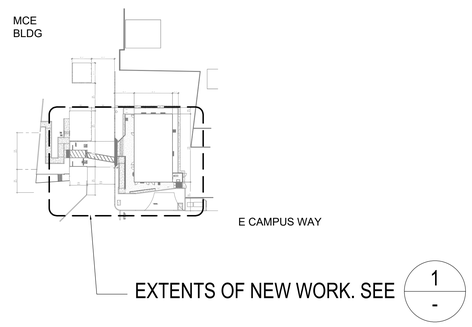

2 OVERALL SITE KEY PLAN
NTS

NORTH

DIVISION OF THE STATE ARCHITECT

IDENTIFICATION STAMP
DIV. OF THE STATE ARCHITECT
APP: 03-124589 INC:
REVIEWED FOR
SS ☑ FLS ☑ ACS ☑
DATE: 04/15/2025

VENTURA COUNTY COMMUNITY COLLEGE DISTRICT
761 EAST DAILY DRIVE
CAMARILLO, CALIFORNIA 93010
TEL: (805) 652-5500

PROJECT TITLE AND SCHOOL LOCATION

VENTURA COMMUNITY COLLEGE STEM MODULAR BUILDING
VENTURA COMMUNITY COLLEGE
4667 TELEGRAPH RD.
VENTURA, CA 93003

COMMISSIONED ARCHITECT

AMADOR

amador whittle architects, inc.
28328 AGOURA RD, 203 | AGOURA HILLS CA, 91301 | 805-558-6334

CONSULTANT

Orion Structural

ORION STRUCTURAL GROUP, INC.
223 East Thousand Oaks Boulevard, Suite 304
Thousand Oaks, CA 91360
Phone: (805)750-8136 Fax: (805)494-0418

OSG# 22604.010

STAMPS/SEALS

REGISTERED PROFESSIONAL ENGINEER
WILL A. LAMBERT
No. 5430
Exp. 06/30/2026
STRUCTURAL
STATE OF CALIFORNIA
3/6/2025

LICENSED ARCHITECT
WILLIAM JORGE AMADOR
C-20348
JANUARY 31, 2027
RENEWAL DATE
STATE OF CALIFORNIA

DSA V3 SUBMITTAL 03/21/2025

SHEET TITLE:

PARTIAL FOUNDATION PLAN

PROJECT NO: 22-VCCCD-08	PROJECT ARCH: BA
DRAWN: MG	CHECKED: EN
SHEET NUMBER: S103	
DATE: 3/6/25	SHEET: ___ OF ___

MECHANICAL NOTES

1. SCOPE OF WORK: WORK INCLUDES THE FOLLOWING: FURNISH AND INSTALL ALL EQUIPMENT AND CONTROLS SHOWN ON THE ARCHITECTURAL, MECHANICAL, PLUMBING, STRUCTURAL, AND ELECTRICAL DRAWINGS AND DESCRIBED IN THESE NOTES, AND THE CONTRACT DOCUMENTS. WORK INCLUDES BUT IS NOT LIMITED TO: INSTALL NEW EXHAUST FAN; AND STARTUP AND COMMISSIONING OF NEW COMPLETE MECHANICAL AND CONTROL SYSTEMS AS DESCRIBED IN THE CONTRACT DOCUMENTS. INCLUDED ARE ALL DEVICES NEEDED TO MAKE COMPLETE AND FUNCTIONAL SPACE CONDITIONING SYSTEMS AND CONTROLS. CONTRACTOR SHALL FURNISH AND INSTALL, MAKE OPERABLE, AND TEST ALL SYSTEMS AND MECHANICAL EQUIPMENT SHOWN ON THE PLANS AND DESCRIBED IN THE SPECIFICATIONS AND CONTRACT DOCUMENTS. IN CONNECTION THEREWITH, CONTRACTOR SHALL ALSO FURNISH AND INSTALL ALL NECESSARY DEVICES, HARDWARE, AND SYSTEMS REQUIRED TO MAKE SAID EQUIPMENT PROPERLY AND SAFELY OPERABLE, INCLUDING BUT NOT LIMITED TO, MOUNTING HARDWARE, INSULATION, FILTERS, DUCT SYSTEMS, AND CONTROL SYSTEMS.

2. EXAMINATION OF SITE AND CONTRACT DOCUMENTS. EACH BIDDER SHALL, AT ITS SOLE COST AND EXPENSE, INSPECT THE SITE OF THE PROPOSED WORK TO BECOME FULLY ACQUAINTED WITH CONDITIONS RELATING TO THE WORK AND TO FULLY UNDERSTAND THE FACILITIES, DIFFICULTIES AND RESTRICTIONS ATTENDING THE EXECUTION OF THE WORK UNDER THE CONTRACT DOCUMENTS AND COST THEREOF. BIDDERS SHALL THOROUGHLY REVIEW AND BE FAMILIAR WITH THE CONTRACT DOCUMENTS, INCLUDING WITHOUT LIMITATION, THE SPECIFICATIONS AND THE DRAWINGS. THE FAILURE OR OMISSION OF ANY BIDDER TO RECEIVE OR EXAMINE ANY OF THE CONTRACT DOCUMENTS, FORMS, INSTRUMENTS, ADDENDA, OR OTHER DOCUMENTS OR TO INSPECT THE SITE SHALL NOT RELIEVE SUCH BIDDER FROM ANY OBLIGATIONS WITH RESPECT TO THE BID PROPOSAL. THE CONTRACT OR THE WORK REQUIRED UNDER THE CONTRACT DOCUMENTS. THE OWNER ASSUMES NO RESPONSIBILITY OR LIABILITY TO ANY BIDDER FOR, NOR SHALL THE OWNER BE BOUND BY, ANY UNDERSTANDINGS, REPRESENTATIONS OR AGREEMENTS OF THE OWNER'S AGENTS, EMPLOYEES OR OFFICERS CONCERNING THE CONTRACT DOCUMENTS OR THE WORK MADE PRIOR TO EXECUTION OF THE CONTRACT.

3. INTERPRETATION OF DRAWINGS, SPECIFICATIONS OR CONTRACT DOCUMENTS. IF ANY BIDDER IS IN DOUBT AS TO THE TRUE MEANING OF ANY PART OF THE DRAWINGS, THE SPECIFICATIONS OR OTHER PORTIONS OF THE CONTRACT DOCUMENTS; FINDS DISCREPANCIES, ERRORS OR OMISSIONS THEREIN; OR FINDS VARIANCES IN ANY OF THE CONTRACT DOCUMENTS WITH APPLICABLE RULES, REGULATIONS, ORDINANCES AND/OR LAWS, A WRITTEN REQUEST FOR AN INTERPRETATION OR CORRECTION THEREOF MAY BE SUBMITTED TO THE ENGINEER. IT IS THE SOLE AND EXCLUSIVE RESPONSIBILITY OF THE BIDDER TO SUBMIT SUCH REQUEST IN SUFFICIENT TIME FOR THE PREPARATION OF A RESPONSE THERETO AND DELIVERY OF SUCH RESPONSE TO ALL BIDDERS PRIOR TO THE SCHEDULED CLOSING FOR RECEIPT OF BID PROPOSALS. ANY REQUEST OF ANY BIDDER, PURSUANT TO THE FOREGOING SENTENCE THAT IS MADE LESS THAN SEVEN DAYS PRIOR TO THE SCHEDULED CLOSING DATE FOR THE RECEIPT OF BID PROPOSALS SHALL BE DEEMED UNTIMELY. ANY INTERPRETATION OR CORRECTION OF THE CONTRACT DOCUMENTS WILL BE MADE ONLY BY WRITTEN ADDENDUM DULY ISSUED BY THE OWNER OR THE ENGINEER. A COPY OF ANY SUCH ADDENDUM WILL BE MAILED OR OTHERWISE DELIVERED TO EACH BIDDER RECEIVING A SET OF THE CONTRACT DOCUMENTS. NO PERSON IS AUTHORIZED TO RENDER AN ORAL INTERPRETATION OR CORRECTION OF ANY PORTION OF THE CONTRACT DOCUMENTS TO ANY BIDDER, AND NO BIDDER IS AUTHORIZED TO RELY ON ANY SUCH ORAL INTERPRETATION OR CORRECTION. FAILURE TO REQUEST INTERPRETATION OR CLARIFICATION OF THE DRAWINGS, THE SPECIFICATIONS OR OTHER PORTIONS OF THE CONTRACT DOCUMENTS PURSUANT TO THE FOREGOING SHALL BE DEEMED TO BE A WAIVER OF ANY DISCREPANCY, DEFECT, OR CONFLICT THEREIN.

4. DIMENSIONS. ALL DIMENSIONS SHALL HAVE PREFERENCE OVER SCALE. ALL DIMENSIONS SHALL BE VERIFIED IN THE FIELD. ENGINEER SHALL BE NOTIFIED OF ANY DISCREPANCIES BETWEEN ARCHITECTURAL AND ENGINEERING DRAWINGS BEFORE PROCEEDING WITH WORK. IN NO CASE SHALL WORKING DIMENSIONS BE SCALED FROM PLANS, SECTIONS, OR DETAILS ON WORKING DRAWINGS. ALL SIZES OF EQUIPMENT AND MATERIALS SHALL BE VERIFIED WITH EQUIPMENT MANUFACTURER.

5. CODES AND STANDARDS: ALL WORK SHALL COMPLY WITH ALL APPLICABLE REQUIREMENTS OF THE OCCUPATIONAL SAFETY AND HEALTH ACT (OSHA), 2022 CALIFORNIA BUILDING CODE, THE 2022 CALIFORNIA MECHANICAL CODE, THE 2022 CALIFORNIA PLUMBING CODE, THE 2022 CALIFORNIA GREEN BUILDING STANDARDS CODE, 2022 CALIFORNIA ELECTRIC CODE, THE STATE OF CALIFORNIA, EQUIPMENT MANUFACTURER'S RECOMMENDED PROCEDURES, AND STANDARD CONSTRUCTION PRACTICES. NOTE: ALL MECHANICAL EQUIPMENT SHALL BE IN STRICT ACCORDANCE WITH THE EQUIPMENT SCHEDULE, AND SHALL BE NEW AND FREE FROM DEFECTS. CONTRACTOR SHALL OBTAIN APPROVED INSPECTIONS FOR ALL WORK AS REQUIRED BY OWNER AND LOCAL JURISDICTION. CONTRACTOR SHALL MAINTAIN IN EFFECT ALL INSURANCE REQUIRED BY STATE LAWS, LOCAL JURISDICTION AND GENERAL CONTRACTOR/OWNER. WHERE CONFLICT OR VARIATION EXISTS AMONGST CODES, SPECIFICATIONS OR DRAWINGS, THE MOST STRINGENT SHALL GOVERN.

NOTE: WHERE TWO OR MORE CODES CONFLICT, THE MOST RESTRICTIVE SHALL APPLY. NOTHING IN THESE PLANS AND SPECIFICATIONS SHALL BE CONSTRUED TO PERMIT WORK NOT CONFORMING TO APPLICABLE CODES.

6. CONSTRUCTION OBSERVATION: IN ADDITION TO THE REQUIREMENT FOR OBTAINING INSPECTIONS BY THE LOCAL JURISDICTION, CONTRACTOR SHALL NOTIFY ENGINEER AT APPROPRIATE TIMES DURING THE CONSTRUCTION PROCESS SO THAT ENGINEER CAN VISIT SITE TO BECOME GENERALLY FAMILIAR WITH THE PROGRESS AND QUALITY OF CONTRACTOR'S WORK AND TO DETERMINE IF THE WORK IS PROCEEDING IN GENERAL ACCORDANCE WITH THE CONTRACT DOCUMENTS.

7. SUBMITTALS REQUIRED: PRIOR TO ORDERING EQUIPMENT AND MATERIALS, CONTRACTOR SHALL FURNISH TO ENGINEER / OWNER SUBMITTALS AND SHOP DRAWINGS OF ALL EQUIPMENT AND MATERIALS PROPOSED FOR USE IN THIS PROJECT. ORDERING OF EQUIPMENT AND MATERIALS SHALL ONLY PROCEED AFTER SATISFACTORY REVIEW OF ALL SUBMITTALS BY CONTRACTOR / ENGINEER / OWNER. COPIES OF ALL OWNER'S MANUALS, WARRANTIES AND OTHER WRITTEN INFORMATION REGARDING SYSTEMS SHALL BE PRESENTED TO OWNER PRIOR TO THE COMPLETION OF THE PROJECT.

8. UNIT LOCATIONS: EQUIPMENT AND SYSTEM LOCATIONS SHOWN ARE APPROXIMATE ONLY. CONTRACTOR SHALL VERIFY LOCATIONS OF ALL STRUCTURAL MEMBERS AND EXISTING CONDITIONS IN THE FIELD, AND LOCATE UNITS AND DUCTWORK TO AVOID INTERFERENCE. ANY SIGNIFICANT DEVIATIONS FROM THE PLANS SHALL BE CALLED TO THE ATTENTION OF THE ENGINEER. ALLOW CLEARANCE FOR DUCTWORK AND PIPING, ALL CLEARANCES REQUIRED BY UNIT MANUFACTURER SHALL BE MAINTAINED. ENTIRE INSTALLATION SHALL BE IN ACCORDANCE WITH CODES AND THE RECOMMENDED INSTALLATION PROCEDURES PUBLISHED BY THE MANUFACTURER.

9. BALANCING: FOLLOWING INSTALLATION, CONTRACTOR SHALL START UP AND BALANCE ALL HVAC SYSTEMS TO CONFORM TO AIR VOLUMES INDICATED ON PLANS. COPIES OF BALANCING RECORDS SHALL BE FURNISHED TO BUILDING OWNER AND PROJECT ENGINEER.

10. CLEANUP: EVERY DAY, AND AFTER ALL WORK HAS BEEN COMPLETED, CONTRACTOR SHALL CLEAN ENTIRE JOB-SITE OF ALL DEBRIS ASSOCIATED WITH MECHANICAL SYSTEMS. EXPOSED PARTS WHICH ARE TO BE PAINTED SHALL BE THOROUGHLY CLEANED READY FOR PAINTING.

11. COORDINATION: MECHANICAL CONTRACTOR SHALL COORDINATE WORK WITH THE DISTRICT'S PROJECT MANAGER AND ALL RELATED TRADES. SYSTEM DOWNTOWN SHALL BE MINIMIZED.

12. COORDINATION DURING CONSTRUCTION: THE CONTRACTOR SHALL COORDINATE ANY NECESSARY CHANGES IN WORK SCHEDULING WITH THE OWNER TO MINIMIZE THE DISRUPTION. THE CONTRACTOR SHALL COORDINATE WITH OTHER TRADES. THE CONTRACTOR SHALL REPAIR ANY DAMAGE CAUSED BY HIS WORK TO BUILDING(S) AND EQUIPMENT AT NO ADDITIONAL COST TO THE OWNER.

13. CORRECTION OF WORK: THE CONTRACTOR SHALL PROMPTLY CORRECT ALL WORK THE OWNER FINDS DEFECTIVE OR FAILING TO CONFORM TO THE CONTRACT DOCUMENTS. THE CONTRACTOR SHALL BEAR ALL COSTS REQUIRED BY THE CONTRACT DOCUMENTS, IF ANY OF THE WORK IS FOUND TO BE DEFECTIVE OR NOT IN ACCORDANCE WITH THE CONTRACT DOCUMENTS. THE CONTRACTOR SHALL CORRECT IT PROMPTLY AFTER RECEIPT OF A WRITTEN NOTICE FROM THE OWNER TO DO SO.

15. AS-BUILT DRAWINGS SHALL BE GIVEN TO THE OWNER PRIOR TO ACCEPTANCE OF THE PROJECT. INCLUDED IN THE AS-BUILTS SHALL BE DOCUMENTATION AND TWO COPIES OF THE ANNOTATED PROGRAMMING ON MAGNETIC MEDIA AND PRINTED SHEETS.

16. FUNCTIONAL PERFORMANCE TESTING. CONTRACTOR SHALL CONFIRM THAT NEW SYSTEMS HAVE BEEN INSTALLED, PROPERLY STARTED, AND FUNCTIONING PROPERLY. CONTRACTOR SHALL PROVIDE SENSOR CALIBRATION SHEETS TO ENGINEER. CONTRACTOR SHALL PROVIDE CONTROL TECHNICIAN FOR 3 HOURS OF FUNCTIONAL TESTING WITH ENGINEER PRESENT. CONTROL TECHNICIAN SHALL MANIPULATE CONTROL PARAMETERS TO VERIFY THE OPERATION OF THE SYSTEMS.

EQUIPMENT SCHEDULE

EF 1	EXHAUST FAN. GREENHECK MODEL FJI-10-BI. UPBLAST WITH DISCHARGE STACK 640 CFM @ 1.5" W.C. ELECTRICAL 208/60/1, FLA 4 AMPS, 1/3 HP OPERATING WT: 235 LBS

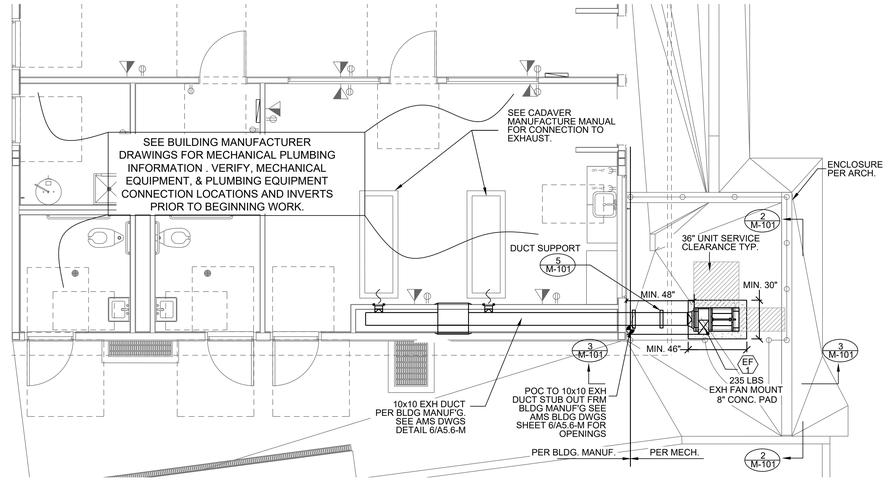

1 MECHANICAL FLOOR PLAN
SCALE: 1/4"=1'-0"

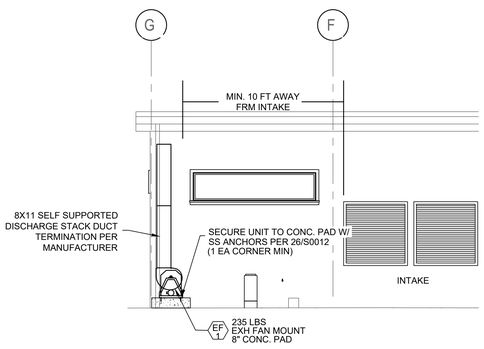

2 MECHANICAL SECTION
SCALE: NO SCALE

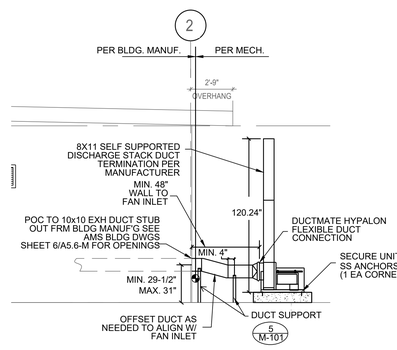

3 MECHANICAL SECTION
SCALE: NO SCALE

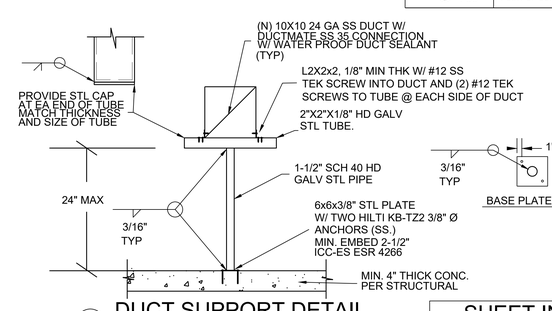

5 DUCT SUPPORT DETAIL
SCALE: NO SCALE

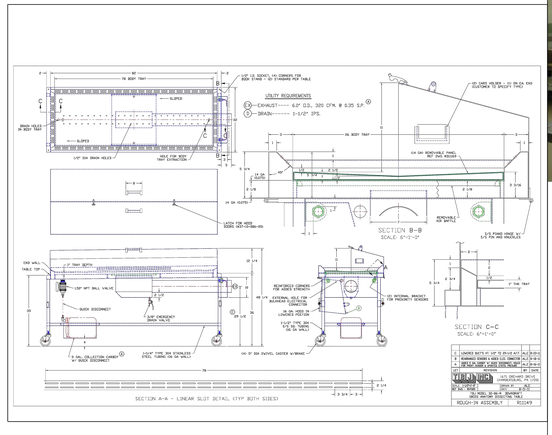

CADAVER TABLE PROVIDED BY THE DISTRICT

CADAVER TABLE CUT SHEETS
4 SCALE: NO SCALE

ABBREVIATIONS

ABBRV	ABBREVIATIONS
ABV	ABOVE
AFF	ABOVE FINISHED FLOOR
AHU	AIR HANDLING UNIT
APPROX	APPROXIMATELY
BLDG	BUILDING
BLW	BELOW
BOT	BOTTOM
CD	CEILING DIFFUSER
CFM	CUBIC FEET PER MINUTE
CL	CENTERLINE
CLG	CEILING
COND	CONDENSATE
CONT	CONTINUED
DIA	DIAMETER
DN	DOWN
DWG	DRAWING
(E)	EXISTING
EA	EACH
EL	ELEVATION
ELEC	ELECTRIC
ELEV	ELEVATION
EQ	EQUIPMENT
EQUIP	EQUIPMENT
EXH	EXHAUST
FIN	FINISHED
FRM	FROM
FLR	FLOOR
G	GAS
GPM	GALLONS PER MINUTE
MAX	MAXIMUM
MIN	MINIMUM
(N)	NEW
OC	ON CENTER
POC	POINT OF CONNECTION
PSI	POUNDS PER SQUARE INCH
RAG	RETURN AIR GRILLE
RAR	RETURN AIR REGISTER
SD	SMOKE DETECTOR
SHT	SHEET
SOV	SHUT-OFF VALVE
SPEC	SPECIFICATIONS
SR	SIDEWALL REGISTER
SS	STAINLESS STEEL
(TYP)	TYPICAL
UGND	UNDERGROUND
VTR	VENT TO ROOF
WCO	WALL CLEAN-OUT

SYMBOL LEGEND

SEE MECH. SCHEDULE FOR DESCRIPTIONS

X	EQUIPMENT TAG SEE MECH. SCHEDULE
1 MX.X	DETAIL TAG
POC	POINT OF CONNECTION

SHEET INDEX

M101 MECHANICAL NOTES, SCHEDULE, PLAN & DETAILS

MEP COMPONENT ANCHORAGE NOTE

ALL MECHANICAL, PLUMBING, AND ELECTRICAL COMPONENTS SHALL BE ANCHORED AND INSTALLED PER THE DETAILS ON THE DSA APPROVED CONSTRUCTION DOCUMENTS. THE FOLLOWING COMPONENTS SHALL BE ANCHORED OR BRACED TO MEET THE FORCE AND DISPLACEMENT REQUIREMENTS PRESCRIBED IN THE 2022 CBC SECTIONS 1617A.1.18 THROUGH 1617A.1.26 AND ASCE 7-16 CHAPTER 13, 26, AND 30;

1. ALL PERMANENT EQUIPMENT AND COMPONENTS.
2. TEMPORARY, MOVEABLE OR MOBILE EQUIPMENT THAT IS PERMANENTLY ATTACHED (E.G. HARD WIRED) TO THE BUILDING UTILITY SERVICES SUCH AS ELECTRICITY, GAS OR WATER. "PERMANENTLY ATTACHED" SHALL INCLUDE ALL ELECTRICAL CONNECTIONS EXCEPT PLUGS FOR 110/220 VOLT RECEPTACLES HAVING A FLEXIBLE CABLE.
3. TEMPORARY, MOVABLE OR MOBILE EQUIPMENT WHICH IS HEAVIER THAN 400 POUNDS OR HAS A CENTER OF MASS LOCATED 4 FEET OR MORE ABOVE THE ADJACENT FLOOR OR ROOF LEVEL THAT DIRECTLY SUPPORT THE COMPONENT IS REQUIRED TO BE RESTRAINED A MANNER APPROVED BY DSA.

THE FOLLOWING MECHANICAL AND ELECTRICAL COMPONENTS SHALL BE POSITIVELY ATTACHED TO THE STRUCTURE, BUT NEED NOT DEMONSTRATE DESIGN COMPLIANCE WITH REFERENCES NOTED ABOVE. THESE COMPONENTS SHALL HAVE FLEXIBLE CONNECTIONS PROVIDED BETWEEN THE COMPONENT AND ASSOCIATED DUCTWORK, PIPING, AND CONDUIT. FLEXIBLE CONNECTIONS MUST ALLOW MOVEMENT IN BOTH TRANSVERSE AND LONGITUDINAL DIRECTION.

A. COMPONENTS WEIGHING LESS THAN 400 POUNDS AND HAVE A CENTER OF MASS LOCATED 4 FEET OR LESS ABOVE THE ADJACENT FLOOR OR ROOF LEVEL THAT DIRECTLY SUPPORT THE COMPONENT.
B. COMPONENTS WEIGHING LESS THAN 20 POUNDS, OR IN THE CASE OF DISTRIBUTED SYSTEMS, LESS THAN 5 POUNDS PER FOOT, WHICH ARE SUSPENDED FROM A ROOF OR FLOOR OR HUNG FROM A WALL.

THE ANCHORAGE OF ALL MECHANICAL, ELECTRICAL AND PLUMBING COMPONENTS SHALL BE SUBJECT TO THE APPROVAL OF THE DESIGN PROFESSIONAL IN GENERAL RESPONSIBLE CHARGE OR STRUCTURAL ENGINEER DELEGATED RESPONSIBILITY AND ACCEPTANCE BY DSA. THE PROJECT INSPECTOR WILL VERIFY THAT ALL COMPONENTS AND EQUIPMENT HAVE BEEN ANCHORED IN ACCORDANCE WITH THE ABOVE REQUIREMENTS.

PIPING, DUCTWORK, AND ELECTRICAL DISTRIBUTION SYSTEM BRACING NOTE

PIPING, DUCTWORK, AND ELECTRICAL DISTRIBUTION SYSTEMS SHALL BE BRACED TO COMPLY WITH THE FORCES AND DISPLACEMENTS PRESCRIBED IN ASCE 7-16 SECTION 13.3 AS DEFINED IN ASCE 7-16 SECTIONS 13.6.5, 13.6.6, 13.6.7, 13.6.8; AND 2022 CBC, SECTION 1617A.1.24, 1617A.1.25 AND 1617A.1.26.

THE METHOD OF SHOWING BRACING AND ATTACHMENTS TO THE STRUCTURE FOR THE IDENTIFIED DISTRIBUTION SYSTEM ARE AS NOTED BELOW. WHEN BRACING AND ATTACHMENTS ARE BASED ON A PREAPPROVED INSTALLATION GUIDE (E.G., HCAI OPM FOR 2013 CBC OR LATER), COPIES OF THE BRACING SYSTEM INSTALLATION GUIDE OR MANUAL SHALL BE AVAILABLE ON THE JOBSITE PRIOR TO THE START OF AND DURING THE HANGING AND BRACING OF THE DISTRIBUTION SYSTEMS. THE STRUCTURAL ENGINEER OF RECORD SHALL VERIFY THE ADEQUACY OF THE STRUCTURE TO SUPPORT THE HANGER AND BRACE LOADS.

MECHANICAL PIPING (MP), MECHANICAL DUCTS (MD), PLUMBING PIPING (PP), ELECTRICAL DISTRIBUTION SYSTEMS (E):

MP ☐ MD ☒ PP ☐ E ☐ - OPTION 1: DETAILED ON THE APPROVED DRAWINGS WITH PROJECT SPECIFIC NOTES AND DETAILS.
MP ☐ MD ☐ PP ☐ E ☐ - OPTION 2: SHALL COMPLY WITH HCAI (OSHPD) PRE-APPROVAL (OPM #) #_____. IN THESE DRAWINGS WITH PROJECT-SPECIFIC NOTES AND DETAILS.

DIVISION OF THE STATE ARCHITECT

IDENTIFICATION STAMP
DIV. OF THE STATE ARCHITECT
APP: 03-124589 INC:
REVIEWED FOR
SS ☑ FLS ☑ ACS ☑
DATE: 04/15/2025

VENTURA COUNTY COMMUNITY COLLEGE DISTRICT
761 EAST DAILY
CAMARILLO, CALIFORNIA
9301 TEL: (805)
652-5500

PROJECT TITLE AND SCHOOL LOCATION

VENTURA COMMUNITY COLLEGE STEM MODULAR BUILDING
VENTURA COMMUNITY COLLEGE
4667 TELEGRAPH RD.
VENTURA, CA 93003

COMMISSIONED ARCHITECT

AMADOR
amador whitlle architects, inc.
28328 AGOURA RD, 203 | AGOURA HILLS CA, 91301 | 805-558-4334

CONSULTANT

AE Group
Mechanical Engineers
838 East Front Street
Ventura, California 93001-2925
(805) 653-1722
hugh@aegroupme.com

STAMPS/SEALS

REGISTERED PROFESSIONAL ENGINEER HUGH A. McTERNAN M030626 Exp. 6/30/2026 MECHANICAL STATE OF CALIFORNIA

LICENSED ARCHITECT WILLIAM JORGE AMADOR C-20348 JANUARY 31, 2027 RENEWAL DATE STATE OF CALIFORNIA

DSA V3 SUBMITTAL 03/21/2025

SHEET TITLE:

MECHANICAL NOTES, SCHEDULE, PLAN & DETAILS

PROJECT NO : 22-VCCCD-08	PROJECT ARCH: BA
DRAWN: JS	CHECKED: HMPW

SHEET NUMBER:

M101

DATE: 12/16/2024 | SHEET: ___ OF ___

PLUMBING NOTES

1. SCOPE OF WORK: FURNISH AND INSTALL ALL FIXTURES & PIPING SHOWN ON THE PLUMBING AND ARCHITECTURAL DRAWINGS AND DESCRIBED IN THESE NOTES AND THE BOOK SPECIFICATIONS. UNLESS OTHERWISE DIRECTED BY BUILDING OWNER, CONTRACTOR SHALL ARRANGE FOR AND PAY ALL FEES FOR CONNECTIONS TO UTILITIES FOR WATER, & SEWER. IN CONNECTION WITH THIS WORK, CONTRACTOR SHALL ALSO FURNISH AND INSTALL ALL NECESSARY LABOR, DEVICES, HARDWARE AND SYSTEMS REQUIRED TO MAKE SAID SYSTEMS PROPERLY AND SAFELY OPERABLE, INCLUDING, BUT NOT LIMITED TO, TRENCHING, BACKFILL, CUTTING, AND PATCHING. PROVIDE ALL SEWER & WATER PIPING TO NEW MODULAR CLASSROOMS INCLUDING BUT NOT LIMITED TO PIPE, VALVES, & CONNECTIONS TO EXISTING UTILITIES NECESSARY FOR A COMPLETE SYSTEM. SEE BOOK SPECIFICATIONS FOR MORE INFORMATION. VERIFY ALL CONNECTION SIZES. CUT AND PATCH FINISHED SURFACES AS REQUIRED. REPAIR ANY DAMAGED (E) PIPING. DO NOT COVER UNTIL RECEIVING POSITIVE APPROVAL FROM INSPECTOR. PROVIDE CONNECTIONS TO MODULAR CLASSROOM PIPING. VERIFY LOCATION.

2. EXAMINATION OF SITE AND CONTRACT DOCUMENTS. EACH BIDDER SHALL, AT ITS SOLE COST AND EXPENSE, INSPECT THE SITE OF THE PROPOSED WORK TO BECOME FULLY ACQUAINTED WITH CONDITIONS RELATING TO THE WORK AND TO FULLY UNDERSTAND THE FACILITIES, DIFFICULTIES AND RESTRICTIONS ATTENDING THE EXECUTION OF THE WORK UNDER THE CONTRACT DOCUMENTS AND COST THEREOF. BIDDERS SHALL THOROUGHLY REVIEW AND BE FAMILIAR WITH THE CONTRACT DOCUMENTS, INCLUDING WITHOUT LIMITATION, THE SPECIFICATIONS AND THE DRAWINGS. THE FAILURE OR OMISSION OF ANY BIDDER TO RECEIVE OR EXAMINE ANY OF THE CONTRACT DOCUMENTS, FORMS, INSTRUMENTS, ADDENDA, OR OTHER DOCUMENTS OR TO INSPECT THE SITE SHALL NOT RELIEVE SUCH BIDDER FROM ANY OBLIGATIONS WITH RESPECT TO THE BID PROPOSAL, THE CONTRACT OR THE WORK REQUIRED UNDER THE CONTRACT DOCUMENTS. THE OWNER ASSUMES NO RESPONSIBILITY OR LIABILITY TO ANY BIDDER FOR, NOR SHALL THE OWNER BE BOUND BY, ANY UNDERSTANDINGS, REPRESENTATIONS OR AGREEMENTS OF THE OWNER'S AGENTS, EMPLOYEES OR OFFICERS CONCERNING THE CONTRACT DOCUMENTS OR THE WORK MADE PRIOR TO EXECUTION OF THE CONTRACT. THE SUBMISSION OF A BID PROPOSAL SHALL BE DEEMED PRIMA FACIE EVIDENCE OF THE BIDDER'S FULL COMPLIANCE WITH THE REQUIREMENTS OF THIS SECTION.

3. INTERPRETATION OF DRAWINGS, SPECIFICATIONS OR CONTRACT DOCUMENTS. IF ANY BIDDER IS IN DOUBT AS TO THE TRUE MEANING OF ANY PART OF THE DRAWINGS, THE SPECIFICATIONS OR OTHER PORTIONS OF THE CONTRACT DOCUMENTS; FINDS DISCREPANCIES, ERRORS OR OMISSIONS THEREIN; OR FINDS VARIANCES IN ANY OF THE CONTRACT DOCUMENTS WITH APPLICABLE RULES, REGULATIONS, ORDINANCES AND/OR LAWS, A WRITTEN REQUEST FOR AN INTERPRETATION OR CORRECTION THEREOF MAY BE SUBMITTED TO THE ENGINEER. IT IS THE SOLE AND EXCLUSIVE RESPONSIBILITY OF THE BIDDER TO SUBMIT SUCH REQUEST IN SUFFICIENT TIME FOR THE PREPARATION OF A RESPONSE THERETO AND DELIVERY OF SUCH RESPONSE TO ALL BIDDERS PRIOR TO THE SCHEDULED CLOSING FOR RECEIPT OF BID PROPOSALS. ANY REQUEST OF ANY BIDDER, PURSUANT TO THE FOREGOING SENTENCE THAT IS MADE LESS THAN SEVEN DAYS PRIOR TO THE SCHEDULED CLOSING DATE FOR THE RECEIPT OF BID PROPOSALS SHALL BE DEEMED UNTIMELY. ANY INTERPRETATION OR CORRECTION OF THE CONTRACT DOCUMENTS WILL BE MADE ONLY BY WRITTEN ADDENDUM DULY ISSUED BY THE OWNER OR THE ENGINEER. A COPY OF ANY SUCH ADDENDUM WILL BE MAILED OR OTHERWISE DELIVERED TO EACH BIDDER RECEIVING A SET OF THE CONTRACT DOCUMENTS. NO PERSON IS AUTHORIZED TO RENDER AN ORAL INTERPRETATION OR CORRECTION OF ANY PORTION OF THE CONTRACT DOCUMENTS TO ANY BIDDER, AND NO BIDDER IS AUTHORIZED TO RELY ON ANY SUCH ORAL INTERPRETATION OR CORRECTION. FAILURE TO REQUEST INTERPRETATION OR CLARIFICATION OF THE DRAWINGS, THE SPECIFICATIONS OR OTHER PORTIONS OF THE CONTRACT DOCUMENTS PURSUANT TO THE FOREGOING SHALL BE DEEMED TO BE A WAIVER OF ANY DISCREPANCY, DEFECT, OR CONFLICT THEREIN.

4. DIMENSIONS. ALL DIMENSIONS SHALL HAVE PREFERENCE OVER SCALE. ALL DIMENSIONS SHALL BE VERIFIED IN THE FIELD. ENGINEER SHALL BE NOTIFIED OF ANY DISCREPANCIES BETWEEN ARCHITECTURAL AND ENGINEERING DRAWINGS BEFORE PROCEEDING WITH WORK. IN NO CASE SHALL WORKING DIMENSIONS BE SCALED FROM PLANS, SECTIONS, OR DETAILS ON WORKING DRAWINGS. ALL SIZES OF EQUIPMENT AND MATERIALS SHALL BE VERIFIED WITH EQUIPMENT MANUFACTURER. ALL PLUMBING FIXTURES SHALL BE INSTALLED PER THE DIMENSIONS ON THE ARCHITECTURAL DRAWINGS.

5. CODES AND STANDARDS: ALL WORK SHALL COMPLY WITH THE REQUIREMENTS OF THE 2022 CALIFORNIA PLUMBING CODE, THE 2022 CALIFORNIA MECHANICAL CODE, THE 2022 CALIFORNIA BUILDING CODE, THE STATE OF CALIFORNIA, THE LOCAL JURISDICTION, AND STANDARD CONSTRUCTION PRACTICES. ALL PLUMBING FIXTURES SHALL BE IN STRICT ACCORDANCE WITH THE FIXTURE SCHEDULE, AND SHALL BE NEW AND FREE FROM DEFECTS. CONTRACTOR SHALL OBTAIN AND PAY FOR ALL REQUIRED PERMITS AND FEES, AND SHALL OBTAIN APPROVED INSPECTIONS FOR ALL WORK AS REQUIRED BY OWNER, DSA, AND LOCAL JURISDICTION. CONTRACTOR SHALL MAINTAIN IN EFFECT ALL INSURANCE REQUIRED BY STATE LAWS, LOCAL JURISDICTION, AND GENERAL CONTRACTOR / OWNER. WHERE CONFLICT OR VARIATION EXISTS AMONGST CODES, SPECIFICATIONS, OR DRAWINGS, THE MOST STRINGENT SHALL GOVERN.

6. SUBMITTALS REQUIRED: PRIOR TO ORDERING FIXTURES AND MATERIALS, CONTRACTOR SHALL FURNISH SUBMITTALS OF ALL FIXTURES AND MATERIALS PROPOSED FOR USE IN THIS PROJECT. ALL FIXTURES AND MATERIALS SHALL BE INSTITUTIONAL GRADE HEAVY DUTY QUALITY. ORDERING OF FIXTURES AND MATERIALS SHALL ONLY PROCEED AFTER SATISFACTORY REVIEW OF ALL SUBMITTALS BY ENGINEER / OWNER. COPIES OF ALL OWNER'S MANUALS, WARRANTIES, AND OTHER WRITTEN INFORMATION REGARDING SYSTEMS SHALL BE SUBMITTED TO OWNER.

7. CONSTRUCTION OBSERVATION: IN ADDITION TO THE REQUIREMENT FOR OBTAINING INSPECTIONS BY THE LOCAL JURISDICTION, CONTRACTOR SHALL NOTIFY ENGINEER AT APPROPRIATE TIMES DURING THE CONSTRUCTION PROCESS SO THAT ENGINEER CAN VISIT SITE TO BECOME GENERALLY FAMILIAR WITH THE PROGRESS AND QUALITY OF CONTRACTOR'S WORK AND TO DETERMINE IF THE WORK IS PROCEEDING IN GENERAL ACCORDANCE WITH THE CONTRACT DOCUMENTS.

8. UNDERGROUND ALERT: CALL 811 BEFORE YOU DIG OR VISIT CALIFORNIA811.ORG TO REQUEST A TICKET ONLINE."

DO NOT START ANY EXCAVATION JOB WITHOUT FIRST OBTAINING A POSITIVE RESPONSE FROM SOCALGAS THAT YOUR LOCATE AND MARK REQUEST HAS BEEN ADDRESSED.

BEFORE LAYING OUT PIPING AND PERFORMING TRENCHING, CONTRACTOR SHALL DETERMINE LOCATIONS OF EXISTING UNDERGROUND UTILITIES. CONTACT "DIG ALERT / UNDERGROUND SERVICE ALERT OF SOUTHERN CALIFORNIA" - 811 OR CALIFORNIA811.ORG. CONTRACTOR SHALL ALSO CONTACT OWNER'S REPRESENTATIVE TO ASCERTAIN LOCATIONS OF UNDERGROUND PIPING AND OTHER CONDITIONS AFFECTING TRENCHING, AND SHALL PERFORM TESTING AND SUBSURFACE EXPLORATION AS NECESSARY TO LOCATE UTILITIES.

9. TRENCHING: MATERIAL SHALL BE EXCAVATED FROM TRENCHES AND PILED ADJACENT TO THE TRENCH. MATERIAL SHALL BE PILED IN SUCH A MANNER THAT WILL CAUSE A MINIMUM OF INCONVENIENCE TO PUBLIC TRAVEL. ALL ROCK, BOULDERS, AND STONES SHALL BE REMOVED TO PROVIDE A MINIMUM CLEARANCE OF SIX (6) INCHES UNDER AND AROUND PIPES. EXCAVATIONS SHALL BE KEPT FREE OF WATER. TRENCHES SHALL BE DUG TO TRUE AND SMOOTH BOTTOM GRADES AND IN ACCORDANCE WITH THE LINES INDICATED ON DRAWINGS AND AS DIRECTED. TRENCH WIDTHS SHALL NOT EXCEED 30 INCHES OR 1.5 TIMES OUTSIDE DIAMETER OF THE PIPE PLUS 18 INCHES WHICHEVER IS GREATER. MINIMUM TRENCH WIDTH SHALL BE THE OUTSIDE DIAMETER OF PIPE INSTALLED PLUS 12 INCHES.

DEPTH OF TRENCHING FOR WATER AND GAS PIPING SHALL BE SUCH AS TO GIVE A MINIMUM COVER OF 18 INCHES OVER THE TOP OF THE PIPE. DEEPER EXCAVATION MAY BE REQUIRED DUE TO LOCALIZED BREAKS IN GRADE, OR TO INSTALL THE NEW PIPING UNDER EXISTING CULVERTS OR OTHER UTILITIES WHERE NECESSARY.

TRENCHING FOR SEWERS AND DRAINS SHALL BE OF SUFFICIENT WIDTH TO PERMIT PROPER JOINTING OF THE PIPE AND BACKFILLING OF MATERIAL ALONG THE SIDES OF THE PIPE. TRENCH WIDTH AT THE SURFACE OF THE GROUND SHALL BE KEPT TO THE MINIMUM AMOUNT NECESSARY TO INSTALL THE PIPE IN A SAFE MANNER. TRENCHES SHALL BE EXCAVATED BELOW THE BARREL OF THE PIPE A SUFFICIENT DISTANCE TO PROVIDE FOR BEDDING MATERIAL.

WHERE THE TRENCH BOTTOM IS IN A MATERIAL WHICH IS UNSUITABLE FOR FOUNDATION OR WHICH WILL MAKE IT DIFFICULT TO OBTAIN UNIFORM BEARING FOR THE PIPE, SUCH MATERIAL SHALL BE REMOVED AND A STABLE FOUNDATION PROVIDED. THIS SHALL INCLUDE THE PREPARATION OF THE NATIVE TRENCH BOTTOM AND/OR THE TOP OF THE FOUNDATION MATERIAL TO A UNIFORM GRADE SO THAT THE ENTIRE LENGTH OF PIPE RESTS FIRMLY ON A SUITABLE PROPERLY COMPACTED MATERIAL. GRAVEL TO BE USED FOR FOUNDATION PURPOSES SHALL BE OF A TYPE AND GRADATION TO PROVIDE A SOLID COMPACT BEDDING IN THE TRENCH.

10. BEDDDING: CONTRACTOR SHALL COMPLETE 4" SAND (COMPACTED) BEDDING AND THEN BACKFILL TO 6 INCHES OVER THE TOP OF THE PIPE WITH SAND BEFORE STARTING BACKFILLING OPERATIONS. TAKE ALL PRECAUTIONS NECESSARY TO PROTECT THE PIPE FROM DAMAGE, MOVEMENT AND SHIFTING. COMPACTION EQUIPMENT USED ABOVE THE PIPE ZONE SHALL BE OF A TYPE THAT DOES NOT INJURE THE PIPE. WHERE ORIGINAL EXCAVATED MATERIAL IS UNSUITABLE FOR TRENCH BACKFILL, BACKFILL GRAVEL SHALL BE PLACED. UNSUITABLE MATERIAL SHALL BE REMOVED TO A DISPOSAL AREA. WHEREVER A TRENCH IS EXCAVATED IN A PAVED ROADWAY, SIDEWALK OR OTHER AREA WHERE MINOR SETTLEMENTS WOULD BE DETRIMENTAL AND WHERE NATIVE EXCAVATED MATERIAL IS NOT SUITABLE FOR COMPACTION AS BACKFILL, TRENCH SHALL BE BACKFILLED WITH BACKFILL GRAVEL. WARNING TAPE MARKERS AND TRACER WIRES SHALL BE INSTALLED DURING BACKFILL OPERATIONS.

THE METHOD OF COMPACTION SHALL BE AT CONTRACTOR'S OPTION, UNLESS EXCAVATION PERMIT REQUIRES A SPECIFIC TYPE. CONTRACTOR SHALL BE RESPONSIBLE TO PROVIDE THE PROPER SIZE AND TYPE OF COMPACTION EQUIPMENT AND SELECT THE PROPER METHOD OF UTILIZING SAID EQUIPMENT TO ATTAIN THE REQUIRED COMPACTION DENSITY. COMPACTION BY WATER JETTING WILL NOT BE PERMITTED.

WHERE BACKFILL IS REQUIRED TO BE COMPACTED TO A SPECIFIED DENSITY, TESTS FOR COMPLIANCE SHALL BE PERFORMED IN ACCORDANCE WITH THE REQUIREMENTS OF THE GOVERNING AUTHORITY. ALLOW TESTING SERVICE TO INSPECT AND APPROVE EACH SUBGRADE AND FILL LAYER BEFORE FURTHER FILL, BACKFILL OR CONSTRUCTION WORK IS PERFORMED.

11. PIPING LOCATIONS: PIPING LOCATIONS SHOWN ARE DIAGRAMMATIC ONLY. CONTRACTOR SHALL VERIFY LOCATIONS OF ALL LATERAL STUBS, OFFSETS, OBSTRUCTIONS, ETC REQUIRED IN THE FIELD. THE ACTUAL LOCATIONS OF LINES, CLEANOUTS AND CONNECTIONS MAY VARY PROVIDED THAT COMPLETE SYSTEMS ARE SIZED AND INSTALLED IN COMPLIANCE WITH CODES. ANY SIGNIFICANT DEVIATIONS FROM THE PLANS SHALL BE CALLED TO THE ATTENTION OF THE ENGINEER PRIOR TO INSTALLATION. VERIFY CONNECTIONS LOCATIONS AND RELOCATABLES. CUT & PATCH FINISHED SURFACES AS NEEDED FOR PIPE INSTALLATION. PATCH SHALL MATCH ADJACENT SURFACES.

12. WASTE AND VENT PIPING: ALL DRAINS, VENTS, FITTINGS, AND THE BUILDING DRAIN SHALL BE US - MANUFACTURED ABS DWV SCH. 40 PIPE MEETING THE REQUIREMENTS OF ASTM D3965. EXTENSIONS TO SERVE CLEANOUTS AT GRADE SHALL BE CAST IRON. ALL LINES SHALL BE SLOPED AS PER PLAN IN COMPLIANCE WITH CODE. VANDAL-PROOF VENT CAPS (JR SMITH 1748, ZURN Z-193, OR EQUAL) SHALL BE INSTALLED ON EVERY PLUMBING VENT. INSTALL TAPE MARKERS AND TRACER WIRES FOR ALL BURIED PLASTIC PIPE.

13. SITE SEWER PIPING SHALL BE US - MANUFACTURED ABS DWV SCH. 40 PIPE MEETING THE REQUIREMENTS OF ASTM D-3965. EXTENSIONS TO SERVE CLEANOUTS TO GRADE SHALL BE CAST IRON. ALL LINES SHALL BE SLOPED @ 1/4"/FT MIN OR IN COMPLIANCE WITH CODE. WHERE PIPING SLOPES LESS THAN 1/4"/FOOT A LICENSED SURVEYOR SHALL BE EMPLOYED TO VERIFY SEWER SLOPE. PROVIDE ACTUAL INVERT ELEVATIONS AT CLEANOUTS.

14. WATER PIPING: ALL UNDERGROUND SITE PIPING SHALL BE U.S. MANUFACTURED SCHEDULE 80 PVC. ALL ABOVEGROUND PIPING SHALL BE U.S. MANUFACTURED TYPE "L" HARD COPPER WITH (NON-LEAD) SOLDER SWEAT JOINTS. TRANSITIONS FROM PVC TO ABOVE GROUND COPPER SHALL BE MADE WITH U.S. MANUFACTURED TYPE "K" SOFT COPPER, USING MALE PVC / FEMALE COPPER ADAPTERS, WITH NO JOINTS ALLOWED UNDER BUILDING SLABS. UNDERGROUND JOINTS SHALL BE BRAZED. DEPTH OF COVER 30" IN PAVED AREAS / 18" IN LANDSCAPING. INSTALL TAPE MARKERS AND TRACER WIRES FOR ALL BURIED PLASTIC PIPE. INDIVIDUAL SHUTOFF VALVES SHALL BE NIBCO - S-685-80-LF BALL VALVES. MAIN SHUTOFF VALVES SHALL BE NIBCO T-113-LF GATE VALVE.

15. CLEANOUTS: CLEANOUTS TO GRADE SHALL BE J.R. SMITH 4253S OR EQUAL WITH BRONZE PLUG AND NON-SKID COVER WITH LIFTING DEVICE SET FLUSH WITH SURFACE FOR PAVED AREAS. NON-TRAFFIC OR NON-SURFACED AREAS SHALL BE INSTALLED WITH CAST IRON CLEANOUT RISERS TERMINATING WITH BRONZE PLUG WITHIN CHRISTY (OR EQUAL) CONCRETE YARD BOX WITH CAST IRON COVER AND THE WORDS "SEWER" MARKED ON COVER.

16. PIPING SUPPORT: ALL PIPING SHALL BE SUPPORTED IN ACCORDANCE WITH THE REQUIREMENTS OF THE 2022 CALIFORNIA PLUMBING CODE. HORIZONTAL WATER PIPES AND CONDENSATE DRAINS SHALL BE HUNG WITH SUPERSTRUT C-727-F ADJUSTABLE FELT-LINED PIPE HANGERS, THREADED ROD, AND BEAM ATTACHMENT BRACKETS, LOCATED AT SIX FOOT MAXIMUM INTERVALS. VERTICAL WATER PIPES AND CONDENSATE DRAINS SHALL BE SUPPORTED AT THEIR BASES AND AT EACH STORY OR AT TEN FOOT MAXIMUM INTERVALS. TO PREVENT SWAYING, PROVIDE LATERAL BRACING AT SIX FOOT INTERVALS ANCHORED TO OVERHEAD FRAMING. HORIZONTAL CAST IRON PIPING SHALL BE HUNG WITH SUPERSTRUT C-710 ADJUSTABLE CLEVIS HANGERS, THREADED ROD, AND BEAM ATTACHMENT BRACKETS, LOCATED AT FIVE FOOT MAXIMUM INTERVALS. TO PREVENT SWAYING, PROVIDE LATERAL BRACING AT FIVE FOOT INTERVALS ANCHORED TO OVERHEAD FRAMING. VERTICAL PIPING SHALL BE SUPPORTED AT EACH FLOOR WITH SUPERSTRUT C-720 RISER CLAMPS AND AT MIDSPAN WITH C-708 CLAMPS INTO SUPERSTRUT CHANNEL.

17. TESTING: ALL PIPING AND FIXTURES INSTALLED SHALL BE TESTED IN ACCORDANCE WITH THE REQUIREMENTS OF THE 2022 CALIFORNIA PLUMBING CODE AND THE LOCAL JURISDICTION.

18. CORRECTION OF WORK: THE CONTRACTOR SHALL PROMPTLY CORRECT ALL WORK THE SCHOOL FINDS DEFECTIVE OR FAILING TO CONFORM TO THE CONTRACT DOCUMENTS. THE CONTRACTOR SHALL BEAR ALL COSTS REQUIRED BY THE CONTRACT DOCUMENTS. IF ANY OF THE WORK IS FOUND TO BE DEFECTIVE OR NOT IN ACCORDANCE WITH THE CONTRACT DOCUMENTS, THE CONTRACTOR SHALL CORRECT IT PROMPTLY AFTER RECEIPT OF A WRITTEN NOTICE FROM THE SCHOOL DISTRICT TO DO SO.

19. WARRANTY: THE CONTRACTOR SHALL WARRANT THAT ALL SYSTEMS, SUBSYSTEMS, AND COMPONENT PARTS ARE FULLY FREE FROM DEFECTIVE DESIGN, MATERIALS, AND WORKMANSHIP FOR A PERIOD OF ONE YEAR FROM THE DATE OF FINAL ACCEPTANCE BY THE OWNER.

20. AS-BUILT DRAWINGS SHALL BE GIVEN TO THE SCHOOL DISTRICT PRIOR TO ACCEPTANCE OF THE PROJECT.

21. CLEANUP: CONTRACTOR SHALL THOROUGHLY CLEAN ENTIRE JOBSITE EVERY DAY OF ALL DEBRIS ASSOCIATED WITH PLUMBING INSTALLATION.

22. COORDINATION: CONTRACTOR SHALL COORDINATE WITH THE SCHOOL DISTRICT'S PROJECT MANAGER AND ALL RELATED TRADES.

23. CUTTING AND PATCHING. WORK INCLUDES CUTTING AND PATCHING (TO MATCH EXISTING) ALL SURFACES AND SYSTEMS DISTURBED BY THE PLUMBING WORK.

24. TEST & VIDEO NEW SEWER MAIN AFTER SOIL COMPACTION TO VERIFY NO BELLIES EXIST. RUN APPROX 2 GALLON/MIN WHILE VIDEOING THE ENTIRE MAIN SEWER. REVIEW VIDEO W/ INSPECTOR & ENGINEER. REINSTALL PIPE AT ANY LOCATION WHERE STANDING WATER OCCURS.

25. POTHOLE EXISTING UTILITIES AT BEGINNING OF PROJECT. PROVIDE LOCATION, SIZE, & INVERT ON AS-BUILTS. VERIFY AVAILABLE INVERT FOR SEWER DRAINAGE.

PLUMBING SCHEDULE:

SYMBOL	WASTE	VENT	CW	HW	DESCRIPTION
SOV 1	-	-	-	-	SHUT-OFF VALVE. NIBCO S-685-80-LF. 1/2" THRU 2", BRONZE BALL VALVE, FULL PORT, SOLDER END. BRASS BALL VALVE, FULL PORT, IN CHRISTY YARD BOX.
FD 1	2	-	-	-	FLOOR DRAIN. OATEY MODEL 72000. ABS DRAIN, ROUND GRATE, W/ ADJUSTABLE TO MEET FINISH FLOOR.

SHEET INDEX

P101	PLUMING NOTES & SCHEDULE
P301	PLUMBING PLAN & DETAILS

SYMBOL LEGEND

CW	COLD WATER
HW	HOT WATER
COND.	CONDENSATE
WCO	WALL CLEAN-OUT
COTG	CLEAN OUT TO GRADE
VTR	VENT TO ROOF
	FLOOR DRAIN
	WALL CLEAN OUT
	FLOOR CLEAN OUT
	COTG IN YARD BOX
	FLOOR SINK
	WATER HAMMER ARRESTOR
	HOSE BIB
	SHUT-OFF VALVE (SOV)
	P.O.D. POINT OF DISCONNECTION
	P.O.C. POINT OF CONNECTION

LINE LEGEND

	COLD WATER
	HOT WATER
	VENT
	WASTE
G	GAS
COND	CONDENSATE

ABBREVIATIONS

ABBREV	ABBREVIATIONS
ABV	ABOVE
AFF	ABOVE FINISHED FLOOR
AHU	AIR HANDLING UNIT
APPROX	APPROXIMATILY
BLW	BELOW
BFF	BELOW FINISHED FLOOR
BOT | BTM	BOTTOM
BLDG	BUILDING
CLG	CEILING
CD	CEILING DIFFUSER
CL	CENTERLINE
CONC	CONCRETE
COND	CONDENSATE
CONT	CONTINUATION
COTG	CLEAN-OUT TO GRADE
DIA	DIAMETER
DCW	DOMESTIC COLD WATER
DN | DWN	DOWN
DS	DOWN SPOUT
DWG	DRAWING
EA	EACH
ELEC	ELECTRIC
EL | ELEV	ELEVATION
EQ | EQUIP	EQUIPMENT
EXH	EXHAUST
(E)	EXISTING
FCO	FLOOR CLEAN-OUT
FD	FLOOR DRAIN
FIN	FINISHED
FLR	FLOOR
FRM	FROM
FU	FIXTURE UNIT
GPM	GALLONS PER MINUTE
GALV	GALVANIZED
GSM	GALVANIZED STEEL METAL
G	GAS
HP	HORSE POWER
HD	HOT DIPPED GALVANIZED
HWR	HOT WATER RETURN (HYDRONIC)
HWS	HOT WATER SUPPLY (HYDRONIC)
ICW	INDUSTRIAL COLD WATER
IDW	INDIRECT WASTE PIPING
IWR	INDIRECT WASTE RECEPTOR
LPG	LOW PRESSURE GAS
MAX	MAXIMUM
MPG	MEDIUM PRESSURE GAS
MTL	METAL
MIN	MINIMUM
(N)	NEW
OC	ON CENTER
OVRD	OVERHEAD
PCW	PROCESS COLD WATER
POC	POINT OF CONNECTION
POD	POINT OF DISCONNECTION
PSI	POUNDS PER SQUARE INCH
RAG	RETURN AIR GRILLE
RAR	RETURN AIR REGISTER
RD	ROOF DRAIN
RO	ROOF OVERFLOW
SHT	SHEET
SMS	SHEET METAL SCREW
SOV	SHUT-OFF VALVE
SR	SIDEWALL REGISTER
SD	SMOKE DETECTOR
SPEC	SPECIFICATIONS
SS	SANITARY SEWER
STL	STEEL
(TYP)	TYPICAL
UGND	UNDERGROUND
UIW	UNTREATED INDUSTRIAL WASTE
VAV	VARIABLE AIR VOLUME BOX
VFD	VARIABLE FREQUENCY DRIVE
VTR	VENT TO ROOF
VD	VOLUME DAMPER (LOCKING)
W	DOMESTIC WASTE
WCO	WALL (OR ON RISER)CLEAN-OUT
W.C.	WATER COLUMN
WFU	WASTE FIXTURE UNITS

MEP COMPONENT ANCHORAGE NOTE

ALL MECHANICAL, PLUMBING, AND ELECTRICAL COMPONENTS SHALL BE ANCHORED AND INSTALLED PER THE DETAILS ON THE DSA APPROVED CONSTRUCTION DOCUMENTS. THE FOLLOWING COMPONENTS SHALL BE ANCHORED OR BRACED TO MEET THE FORCE AND DISPLACEMENT REQUIREMENTS PRESCRIBED IN THE 2022 CBC SECTIONS 1617A.1.18 THROUGH 1617A.1.26 AND ASCE 7-16 CHAPTER 13, 26, AND 30:

1. ALL PERMANENT EQUIPMENT AND COMPONENTS.
2. TEMPORARY, MOVEABLE OR MOBILE EQUIPMENT THAT IS PERMANENTLY ATTACHED (E.G. HARD WIRED) TO THE BUILDING UTILITY SERVICES SUCH AS ELECTRICITY, GAS OR WATER. "PERMANENTLY ATTACHED" SHALL INCLUDE ALL ELECTRICAL CONNECTIONS EXCEPT PLUGS FOR 110/220 VOLT RECEPTACLES HAVING A FLEXIBLE CABLE.
3. TEMPORARY, MOVABLE OR MOBILE EQUIPMENT WHICH IS HEAVIER THAN 400 POUNDS OR HAS A CENTER OF MASS LOCATED 4 FEET OR MORE ABOVE THE ADJACENT FLOOR OR ROOF LEVEL THAT DIRECTLY SUPPORT THE COMPONENT IS REQUIRED TO BE RESTRAINED A MANNER APPROVED BY DSA.

THE FOLLOWING MECHANICAL AND ELECTRICAL COMPONENTS SHALL BE POSITIVELY ATTACHED TO THE STRUCTURE, BUT NEED NOT DEMONSTRATE DESIGN COMPLIANCE WITH REFERENCES NOTED ABOVE. THESE COMPONENTS SHALL HAVE FLEXIBLE CONNECTIONS PROVIDED BETWEEN THE COMPONENT AND ASSOCIATED DUCTWORK, PIPING, AND CONDUIT. FLEXIBLE CONNECTIONS MUST ALLOW MOVEMENT IN BOTH TRANSVERSE AND LONGITUDINAL DIRECTION.

A. COMPONENTS WEIGHING LESS THAN 400 POUNDS AND HAVE A CENTER OF MASS LOCATED 4 FEET OR LESS ABOVE THE ADJACENT FLOOR OR ROOF LEVEL THAT DIRECTLY SUPPORT THE COMPONENT.
B. COMPONENTS WEIGHING LESS THAN 20 POUNDS, OR IN THE CASE OF DISTRIBUTED SYSTEMS, LESS THAN 5 POUNDS PER FOOT, WHICH ARE SUSPENDED FROM A ROOF OR FLOOR OR HUNG FROM A WALL.

THE ANCHORAGE OF ALL MECHANICAL, ELECTRICAL AND PLUMBING COMPONENTS SHALL BE SUBJECT TO THE APPROVAL OF THE DESIGN PROFESSIONAL IN GENERAL RESPONSIBLE CHARGE OR STRUCTURAL ENGINEER DELEGATED RESPONSIBILITY AND ACCEPTANCE BY DSA. THE PROJECT INSPECTOR WILL VERIFY THAT ALL COMPONENTS AND EQUIPMENT HAVE BEEN ANCHORED IN ACCORDANCE WITH THE ABOVE REQUIREMENTS.

PIPING, DUCTWORK, AND ELECTRICAL DISTRIBUTION SYSTEM BRACING NOTE

PIPING, DUCTWORK, AND ELECTRICAL DISTRIBUTION SYSTEMS SHALL BE BRACED TO COMPLY WITH THE FORCES AND DISPLACEMENTS PRESCRIBED IN ASCE 7-16 SECTION 13.3 AS DEFINED IN ASCE 7-16 SECTIONS 13.6.5, 13.6.6, 13.6.7, 13.6.8; AND 2022 CBC, SECTION 1617A.1.24, 1617A.1.25 AND 1617A.1.26.

THE METHOD OF SHOWING BRACING AND ATTACHMENTS TO THE STRUCTURE FOR THE IDENTIFIED DISTRIBUTION SYSTEM ARE AS NOTED BELOW. WHEN BRACING AND ATTACHMENTS ARE BASED ON A PREAPPROVED INSTALLATION GUIDE (E.G., HCAI OPM FOR 2013 CBC OR LATER), COPIES OF THE BRACING SYSTEM INSTALLATION GUIDE OR MANUAL SHALL BE AVAILABLE ON THE JOBSITE PRIOR TO THE START OF AND DURING THE HANGING AND BRACING OF THE DISTRIBUTION SYSTEMS. THE STRUCTURAL ENGINEER OF RECORD SHALL VERIFY THE ADEQUACY OF THE STRUCTURE TO SUPPORT THE HANGER AND BRACE LOADS.

MECHANICAL PIPING (MP), MECHANICAL DUCTS (MD), PLUMBING PIPING (PP), ELECTRICAL DISTRIBUTION SYSTEMS (E):

MP ☐ MD ☐ PP ☒ E ☐ - OPTION 1: DETAILED ON THE APPROVED DRAWINGS WITH PROJECT SPECIFIC NOTES AND DETAILS.
MP ☐ MD ☐ PP ☐ E ☐ - OPTION 2: SHALL COMPLY WITH HCAI (OSHPD) PRE-APPROVAL (OPM #) #_____. IN THESE DRAWINGS WITH PROJECT-SPECIFIC NOTES AND DETAILS.

DIVISION OF THE STATE ARCHITECT

IDENTIFICATION STAMP
DIV. OF THE STATE ARCHITECT
APP: 03-124589 INC:
REVIEWED FOR
SS ☑ FLS ☑ ACS ☑
DATE: 04/15/2025

VENTURA COUNTY COMMUNITY COLLEGE DISTRICT
761 EAST DAILY
CAMARILLO, CALIFORNIA
9301 TEL: (805) 652-5500

PROJECT TITLE AND SCHOOL LOCATION

VENTURA COMMUNITY COLLEGE STEM MODULAR BUILDING
VENTURA COMMUNITY COLLEGE
4667 TELEGRAPH RD.
VENTURA, CA 93003

COMMISSIONED ARCHITECT

AMADOR
amador whitlite architects, inc.
28328 AGOURA RD, 203 | AGOURA HILLS CA, 91301 | 805-558-4334

CONSULTANT

AE Group
Mechanical Engineers
838 East Front Street
Ventura, California 93001-2925
(805) 653-1722
hugh@aegroupme.com

STAMPS/SEALS

REGISTERED PROFESSIONAL ENGINEER HUGH A. MCTERNAN M030626 Exp. 6/30/2026 MECHANICAL STATE OF CALIFORNIA

LICENSED ARCHITECT WILLIAM JORGE AMADOR C-20348 JANUARY 31, 2027 RENEWAL DATE STATE OF CALIFORNIA

1	
2	
3	
4	DSA V3 SUBMITTAL 03/21/2025

SHEET TITLE:

PLUMBING NOTES & SCHEDULE

PROJECT NO.: 22-VCCCD-08 | PROJECT ARCH: BA
DRAWN: JS | CHECKED: HMPW
SHEET NUMBER:

P101

DATE: 12/16/2024 | SHEET: ___ OF ___

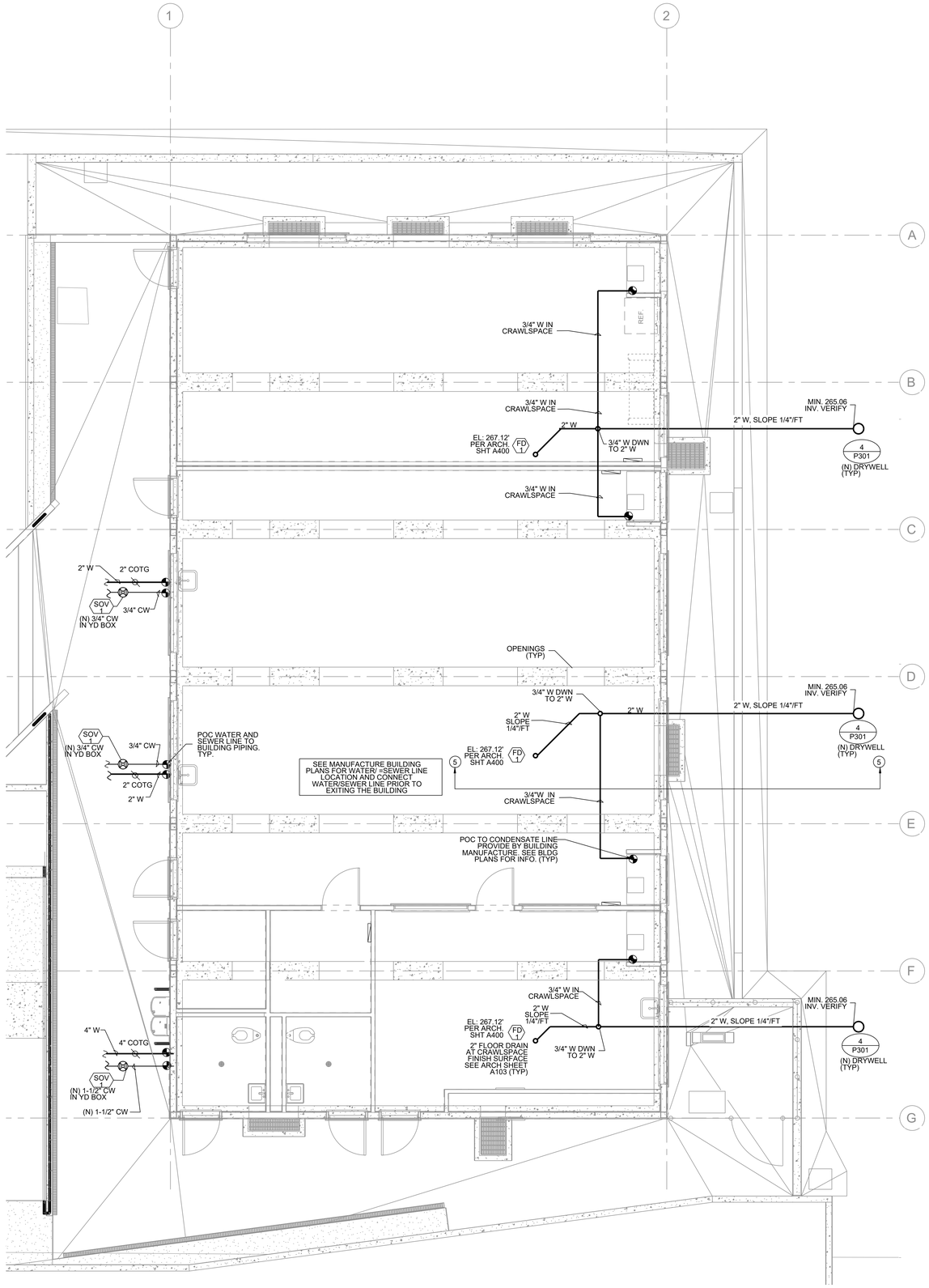

1 PLUMBING PLAN
SCALE: 1/4"=1'-0"

DETAIL NOTES

1. FINISHED SURFACE
2. PRE-CAST CONCRETE BOX WITH CAST IRON COVER. LABEL THE COVER "WATER".
3. 18" WIDE 2500 PSI CONCRETE AROUND VALVE BOX
4. UNION

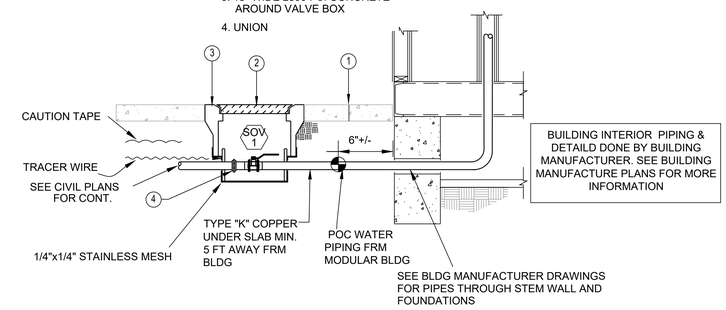

2 BUILDING WATER SUPPLY DETAIL
SCALE: NTS

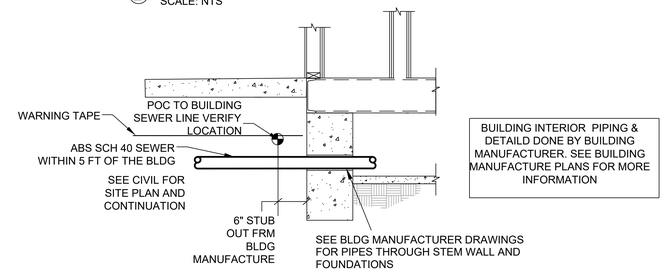

3 BUILDING SEWER DETAIL
SCALE: NTS

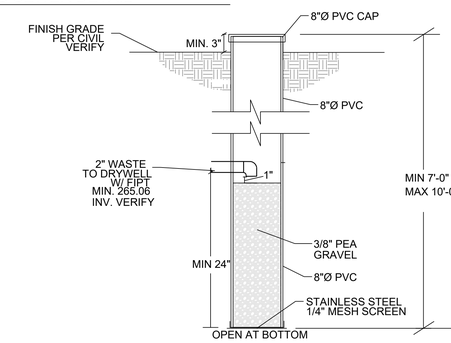

4 DRYWELL DETAIL
SCALE: NTS

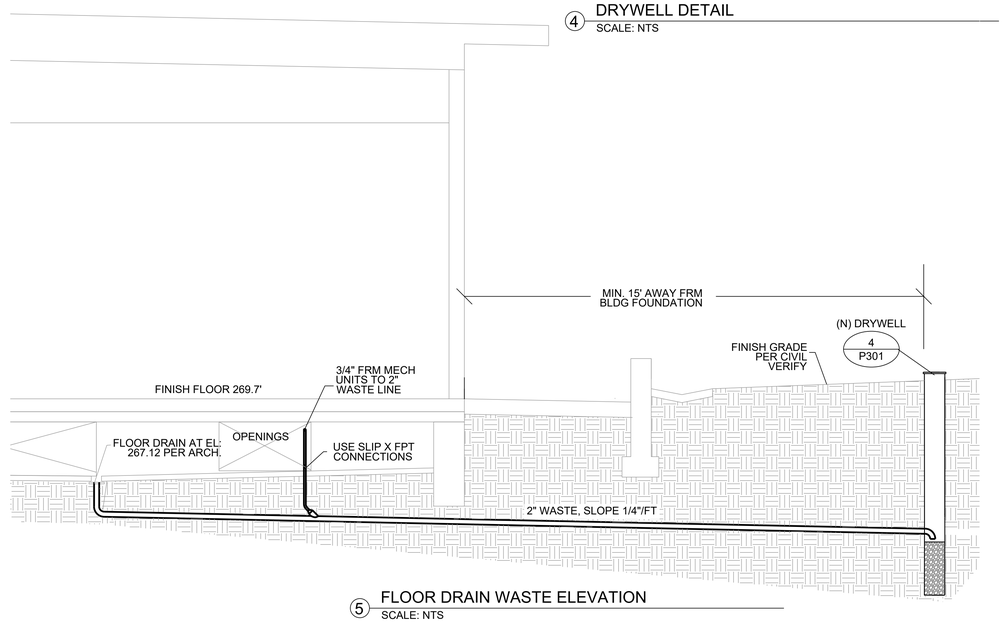

5 FLOOR DRAIN WASTE ELEVATION
SCALE: NTS

DIVISION OF THE STATE ARCHITECT

IDENTIFICATION STAMP
DIV. OF THE STATE ARCHITECT
APP: 03-124589 INC:
REVIEWED FOR
SS ☑ FLS ☑ ACS ☑
DATE: 04/15/2025

VENTURA COUNTY COMMUNITY COLLEGE DISTRICT

761 EAST DAILY
CAMARILLO, CALIFORNIA
9301 TEL: (805)
652-5500

PROJECT TITLE AND SCHOOL LOCATION

VENTURA COMMUNITY COLLEGE STEM MODULAR BUILDING
VENTURA COMMUNITY COLLEGE
4667 TELEGRAPH RD.
VENTURA, CA 93003

COMMISSIONED ARCHITECT

AMADOR

amador whittle architects, inc.
28328 AGOURA RD, 203 | AGOURA HILLS CA, 91301 | 805-558-4334

CONSULTANT

AE Group
Mechanical Engineers
838 East Front Street
Ventura, California 93001-2925
(805) 653-1722
hugh@aegroupme.com

STAMPS/SEALS

REGISTERED PROFESSIONAL ENGINEER
HUGH A. MCTERNAN
M030626
Exp. 6/30/2026
MECHANICAL
STATE OF CALIFORNIA

LICENSED ARCHITECT
WILLIAM JORGE AMADOR
C-20348
JANUARY 31, 2027
RENEWAL DATE
STATE OF CALIFORNIA

△	
△	
△	
△	DSA V3 SUBMITTAL 03/21/2025

SHEET TITLE:

PLUMBING PLAN AND DETAILS

PROJECT NO.: 22-VCCCD-08	PROJECT ARCH: BA
DRAWN: JS	CHECKED: HMPW

SHEET NUMBER:

P301

DATE: 12/16/2024 | SHEET: ___ OF ___

GENERAL NOTES

A. GENERAL

1. SCOPE
THE DRAWINGS AND THESE GENERAL NOTES DESCRIBE THE SCOPE OF WORK AND SYSTEMS. THE MATERIAL REQUIRED FOR THE WORK SHALL BE CONTRACTOR FURNISHED AND CONTRACTOR INSTALLED, UNLESS SPECIFICALLY NOTED OTHERWISE. THE WORK INCLUDES BUT IS NOT LIMITED TO THE FOLLOWING PRINCIPAL SYSTEMS AND EQUIPMENT. ALL ITEMS NOTED ON THE PLAN WHICH ARE NOT EXPLICITLY STATED AS EXISTING SHALL BE NEW.

2. PERMITS AND CHARGES
OBTAIN AND PAY FOR ALL NECESSARY CONSTRUCTION PERMITS, INSPECTION FEES, AND OTHER CHARGES BY AGENCIES HAVING JURISDICTION.

3. REGULATIONS AND CODES
PROVIDE AND INSTALL ALL MATERIALS IN CONFORMANCE WITH THE 2022 C.E.C., CALIFORNIA ADMINISTRATIVE CODE TITLE 8, AND OTHER CODES AND REGULATIONS HAVING JURISDICTION. INSTALL ALL EQUIPMENT IN ACCORDANCE WITH THE REQUIREMENTS OF THE INSPECTING AUTHORITY AND THE MANUFACTURERS RECOMMENDATIONS.

4. VERIFYING EXISTING CONDITIONS
BEFORE SUBMITTING BID, BECOME THOROUGHLY FAMILIAR WITH ACTUAL EXISTING CONDITIONS AT THE BUILDING. THE INTENT OF THE WORK IS SHOWN ON THE DRAWINGS AND DESCRIBED HEREINAFTER. BY THE ACT OF SUBMITTING A BID PROPOSAL FOR THE WORK, THE CONTRACTOR SHALL BE DEEMED TO HAVE MADE SUCH STUDY AND EXAMINATION AND TO ACCEPT ALL CONDITIONS PRESENT AT THE SITE. NO REQUEST FOR ADDITIONAL PAYMENT WILL BE CONSIDERED AS VALID, DUE TO FAILURE TO ALLOW FOR CONDITIONS WHICH MAY EXIST.

5. COORDINATION
COORDINATE ALL WORK WITH OTHER TRADES. OBTAIN ALL DRAWINGS THAT WILL REQUIRE COORDINATION AND PROVIDE ALL ELECTRICAL CONNECTION REQUIRED WHETHER SHOWN ON ELECTRICAL DRAWINGS OR NOT. ELECTRICAL EQUIPMENT LOCATIONS INDICATED ARE SHOWN DIAGRAMMATICALLY, EXACT LOCATION SHALL BE VERIFIED. SCALING OFF OF DRAWINGS SHALL BE DONE AT CONTRACTORS RISK. DO NOT SCALE DEVICES, LIGHTING FIXTURES OR ANY EQUIPMENT FROM PLANS. LIGHTING FIXTURE QUANTITIES AND LENGTHS SHALL BE CONTRACTORS RESPONSIBILITY. FIXTURES ARE SHOWN FOR CIRCUITING ONLY. CONTRACTOR TO VERIFY SIZES & QUANTITIES PRIOR TO BID.

6. SERVICE CONTINUITY
UNINTERRUPTED EXISTING ELECTRICAL POWER SHALL BE MAINTAINED TO OTHER TRADES FOR TEMPORARY POWER AREAS OF THE SITE DURING CONSTRUCTION. PROVIDE ANY TEMPORARY SERVICES AS MAY BE REQUIRED. IDENTIFY AT BID TIME, ALL WORK TO BE DONE ON PREMIUM TIME AND THE TOTAL OVERTIME MAN-HOURS REQUIRED FOR COMPLETION.

7. AS BUILT
PROVIDE RECORD DRAWINGS IN ACAD TO THE OWNER WITH ALL CHANGES NOTED THEREON AT THE COMPLETION OF THE PROJECT. RECORD DRAWINGS SHALL BE SIGNED AND DATED BY CONTRACTOR PRIOR TO RELEASE OF FINAL RETENTION OF ALL MONIES.

8. GUARANTEE
CONTRACTOR SHALL UNCONDITIONALLY GUARANTEE ALL LABOR AND MATERIALS ON ALL WORK AGAINST DEFECTS IN WORKMANSHIP AND MATERIALS FOR A PERIOD OF ONE YEAR.

9. SHOP DRAWINGS
SUBMIT SHOP DRAWINGS AND MATERIAL LIST FOR REVIEW PRIOR TO COMMENCING ANY WORK. ALL EQUIPMENT TO BEAR U.L. LABEL OR THAT OF ANOTHER ACCEPTABLE TESTING LABORATORY. SHOP DRAWINGS MUST BE STAMPED BY THE CONTRACTOR FOR CONFORMANCE PRIOR TO SUBMITTAL. SUBMIT THREE HARD COPY SETS OF SHOP DRAWINGS FOR REVIEW PRIOR TO PURCHASING ALL BREAKER MOUNTING HARDWARE, DISCONNECT SWITCHES, FUSES, CONTROLLERS, LIGHTING FIXTURES, LIGHT SWITCHES, RECEPTACLES, ETC.

10. CONTRACTOR BID
CONTRACTOR'S BID SHALL BE BASED ON ALL WORK SHOWN ON THE PLANS AND AS SPECIFIED. IF CONTRACTOR PROPOSES TO SUBSTITUTE FOR EQUIPMENT SPECIFIED, HE SHALL SUBMIT HIS REQUEST FOR CONSIDERATION OF THE OWNER AND ENGINEER PRIOR TO BID IN WRITING. ALL SUBSTITUTIONS MUST BE REVIEWED BY THE ENGINEER IN WRITING. SUCH REVIEW SHALL NOT RELIEVE THE CONTRACTOR COMPLYING WITH THE REQUIREMENTS OF THE DRAWINGS AND SPECIFICATIONS, AND THE CONTRACTOR SHALL BE RESPONSIBLE AT HIS OWN EXPENSE FOR ANY CHARGES RESULTING FROM HIS PROPOSED SUBSTITUTIONS WHICH AFFECT OTHER PARTS OF HIS OWN WORK, THE OWNER, ENGINEER OF RECORD OR THE WORK OF OTHER CONTRACTORS.

B. MATERIAL AND INSTALLATION
ALL WORK AND MATERIAL SHALL CONFORM TO THE LATEST RULES OF THE GOVERNING ELECTRICAL CODE AND INSTALLATION SHALL BE OF THE LATEST INDUSTRY STANDARDS OF WORKMANSHIP.

ALL INSTALLED MATERIALS AND EQUIPMENT SHALL BE LISTED U.L., NRTL OR LISTED AND APPROVED BY AN APPROVED TESTING LABORATORY.

1. CONDUITS
CONDUIT SHALL BE EMT, PVC, IMC, RIGID OR FLEXIBLE STEEL TYPE. CONDUIT SHALL BE MANUFACTURED IN ACCORDANCE WITH UL-1. A GROUND WIRE IS REQUIRED IN ALL FLEXIBLE CONDUIT AND UNDERGROUND CONDUIT. BUSHINGS SHALL BE INSTALLED ON ALL COMMUNICATION, TELEPHONE & SPEAKER CONDUITS. PROVIDE 3/16" NYLON PULL STRING IN ALL EMPTY CONDUITS. NO MC, BX OR AC90 SHALL BE PERMITTED. FLEXIBLE STEEL CONDUIT RUNS SHALL BE LIMITED TO A MAXIMUM LENGTH OF 6 FOOT. ALL CONNECTIONS SHALL BE COMPRESSION & NOT SCREW TYPE.

2. SWITCHES AND RECEPTACLES
PROVIDE 20AMP NEMA RATED SWITCHES AND RECEPTACLES OF SPECIFICATION GRADE. ALL SWITCHES SHALL BE RATED FOR 120 AND/OR 277 VOLT AND RECEPTACLES SHALL BE NEMA 5-20R. IN ALL OFFICES AND OFFICE AREAS DEVICES SHALL BE DECORA SERIES TYPE WITH COLOR SELECTION BY CONTRACTOR/OWNERS REPRESENTATIVE.

3. FEEDERS AND BRANCH CIRCUITS IDENTIFICATION
IDENTIFY FEEDERS WITH THE CORRESPONDING CIRCUIT DESIGNATION AT THE OVER-CURRENT DEVICE, LOAD END, AND IN PULL BOXES WITH E-Z CODE OR OTHER APPROVED WIRE MARKER. IDENTIFY BRANCH CIRCUITS WITH I.D. MARKERS, THE CORRESPONDING CIRCUIT DESIGNATION AT THE OVER-CURRENT DEVICE, AT ALL SPLICES, IN JUNCTION BOXES, AND IN OUTLETS. USE PLASTIC COATED SELF-STICKING MARKERS SUCH AS THOMAS & BETTS E-Z CODE FOR IDENTIFICATION OF CONDUCTORS. IDENTIFY SIGNAL & COMMUNICATION CABLES AT TERMINAL AND OUTLET UNIQUELY WITH PERMANENT LABELING.

4. CONDUCTORS
DELIVER ALL CONDUCTORS TO THE JOB SITE IN ORIGINAL UNBROKEN CARTON OR REEL, PROPERLY TAGGED WITH U.L. LABEL, SIZE, TYPE, MANUFACTURER, TRADE NAME AND THE DATE OF MANUFACTURE. (MUST BE MANUFACTURED WITHIN 6 MONTHS) PROVIDE COPPER CONDUCTORS #12 AWG MINIMUM UNLESS SPECIFICALLY NOTED OTHERWISE ON THE DRAWINGS. PROVIDE STRANDED COPPER CONDUCTORS FOR ALL WIRING. USE CONDUCTORS WITH 90°C THHN/THWN 600 VOLTS INSULATION, UNLESS OTHERWISE NOTED. CONDUCTOR SIZE NO.1 AWG AND SMALLER WITH 90 DEGREE C INSULATION ARE TO USE THE 60 DEGREE COLUMN OF THE CODE, TABLE 310-16, TO DETERMINE AMPACITY. CONDUCTORS #1/0 AWG AND LARGER WITH 75 DEGREE AND 90 DEGREE INSULATION ARE TO USE THE 75 DEGREE COLUMN OF CODE, TABLE 310-16, TO DETERMINE AMPACITY. (110.14C) WHERE THE NUMBER OF CONDUCTORS IN A RACEWAY OR CABLE EXCEEDS THREE, THE ALLOWABLE AMPACITY OF EACH CONDUCTOR SHALL BE REDUCED PER TABLE 310.15(B)(3)(a).

5. LIGHTING FIXTURES
PROVIDE LIGHTING FIXTURES WITH ELECTRONIC DRIVERS PER SCHEDULE. NO SUBSTITUTIONS OF FIXTURES SHALL BE PROVIDED WITHOUT THE APPROVAL OF THE ENGINEER -OF-RECORD.

6. PANELBOARDS (BID SQUARE D; PROVIDE GE ALTERNATE BID)
DISTRIBUTION AND LIGHTING PANELBOARDS WITHIN PROJECT AREA SHALL BE OF THE COPPER BUS THREE PHASE, FOUR WIRE DISTRIBUTED PHASING TYPE. CIRCUITING SHALL BE ARRANGED TO PROVIDE, AS NEARLY AS POSSIBLE, AN EVENLY BALANCED LOAD ON ALL PHASES. PANELBOARDS SHALL BE BOLT-ON CIRCUIT BREAKER TYPE. AVAILABLE FAULT CURRENT IS STATED ON PANELBOARD SCHEDULE. PROVIDE PANEL IDENTIFICATION NAMEPLATE (ENGRAVED ON-ADHESIVE 1/2" MINIMUM LETTERS) AND TYPEWRITTEN LIST OF CIRCUITS IN THE DIRECTORY FRAME. PROVIDE HINGED PANEL COVERS.

7. STRUCTURAL SUPPORT
EACH SECTION OF FLOOR MOUNTED SWITCHBOARD, DISTRIBUTION BOARD, MCC, ETC. SHALL BE BOLTED TO THE CONCRETE HOUSEKEEPING PAD USING (6) 3/4"-10 GRADE 2 BOLTS AND CONICAL WASHERS TORQUED TO 70LB-FT. PROVIDE MINIMUM 4000 PSI STRENGTH CONCRETE BELOW ALL FLOOR MOUNTED ELECTRICAL EQUIPMENT. TIE THE TOP OF ALL FLOOR MOUNTED ELECTRICAL EQUIPMENT TO THE BUILDING STRUCTURE IN A SEISMICALLY APPROVED MANNER.

8. ELECTRICAL CERTIFICATION
"ELECTRICIANS" PERFORMING WORK ON THIS PROJECT SHALL BE CURRENTLY CERTIFIED IN ACCORDANCE WITH THE STATE OF CALIFORNIA AB931 AND THE DIVISION OF APPRENTISHIP STANDARDS SECTION 3099.

C. DEMOLITION
1. NOTIFY THE OWNER IMMEDIATELY WHEREVER EXISTING EQUIPMENT IS ENCOUNTERED WHICH MUST BE RELOCATED DUE TO THE NEW CONSTRUCTION, AND WHICH IS NOT INDICATED ON THE PLANS.
2. ALL REMOVED MATERIALS AND EQUIPMENT WHICH ARE SALVAGEABLE SHALL REMAIN THE PROPERTY OF THE OWNER. DELIVER SUCH SALVAGED MATERIALS AND EQUIPMENT ON THE PREMISES AS DIRECTED BY OWNER, AND NEATLY PILE OR STORE THEM AND PROTECT FROM DAMAGE. REMOVE FROM PREMISES AND DISPOSE OF ALL MATERIALS CONSIDERED BY THE OWNER TO BE SCRAP.
3. ALL DEVICES, CIRCUITS CONDUCTORS, FEEDERS ETC., WHEN NOTED TO BE REMOVED, SHALL BE REMOVED TO THE LAST ACTIVE DEVICE. ALL OVER-CURRENT PROTECTION AND DISCONNECT DEVICES NO LONGER UTILIZED BUT REMAINING AS LAST ACTIVE DEVICE SHALL BE LABELED AS 'SPARE'. COORDINATE ALL OUTAGES WITH OWNERS REPRESENTATIVE.
4. DISCONNECT AND MAKE SAFE ALL ELECTRICAL SYSTEMS ON SITE AND IN WALL, FLOORS, AND CEILINGS SCHEDULED FOR REMOVAL.
5. REMOVE, RELOCATE, AND EXTEND EXISTING INSTALLATIONS TO ACCOMMODATE NEW CONSTRUCTION.
6. REMOVE ABANDONED WIRING TO SOURCE OF SUPPLY AND RE-LABEL DEVICES AS SPARES.
7. REMOVE ABANDONED CONDUIT, INCLUDING ABANDONED CONDUIT ABOVE ACCESSIBLE CEILING FINISHES. CUT CONDUIT FLUSH WITH WALLS AND FLOOR, AND PATCH SURFACES.
8. DISCONNECT ABANDONED OUTLETS AND REMOVE DEVICES. REMOVE ABANDONED OUTLETS IF CONDUIT SERVICING THEM IS ABANDONED AND REMOVE. PROVIDE BLANK COVER FOR ABANDONED OUTLETS WHICH ARE NOT REMOVED.
9. DISCONNECT AND REMOVE ABANDONED LUMINAIRES. REMOVE BRACKETS, STEMS, HANGERS, AND OTHER
10. REPAIR ADJACENT CONSTRUCTION AND FINISHES DAMAGED DURING DEMOLITION AND EXTENSION WORK
11. MAINTAIN ACCESS TO EXISTING ELECTRICAL INSTALLATIONS WHICH REMAIN ACTIVE. MODIFY INSTALLATION OR PROVIDE ACCESS PANEL AS APPROPRIATE.
12. BEGINNING OF DEMOLITION MEANS CONTRACTOR ACCEPTS EXISTING CONDITIONS.

D. EXECUTION
1. CAREFULLY PROTECT ALL WALLS, TRIM, FLOORS, EQUIPMENT UTILITY LINES AND MATERIALS. WHEN WORKING ON FINISHED SURFACES, LIMIT DAMAGE TO THE CONFINES AS MUCH AS POSSIBLE AND RESTORE TO THE ORIGINAL CONDITION ALL SURFACES WHICH ARE DAMAGED BECAUSE OF THE INSTALLATION OF THIS WORK.
2. EQUIPMENT, MATERIALS AND SUPPLIES REMOVED FOR PROTECTION SHALL BE REPLACED IN ORIGINAL LOCATIONS. ANY MATERIALS DAMAGED SHALL BE REPLACED WITH NEW MATERIALS OF LIKE KIND AND QUALITY.
3. DO ALL DRILLING, CUTTING, CHANNELING AND PATCHING REQUIRED TO INSTALL ELECTRICAL WORK AS INDICATED OR HEREIN SPECIFIED. ALL HOLES, CURBS, ETC., IN FLOORS, CEILINGS AND WALLS SHALL BE PATCHED, UNLESS INDICATED OTHERWISE. PAINT ALL NEW ELECTRICAL RACEWAYS, CABINETS, ENCLOSURES AND FITTINGS PENETRATING INTO FIRE RATED ENVELOPES, SPACES, ETC.
3. ALL CONDUIT RUNS SHALL BE CONCEALED, UNLESS SHOWN OTHERWISE. PROVIDE A PULL WIRE IN ALL EMPTY CONDUITS.
4. EXISTING CONDITION SHOWN IS FROM AVAILABLE RECORD DRAWINGS AND VISUAL FIELD SURVEY AND SHOWN FOR REFERENCE ONLY. CONTRACTOR SHALL VERIFY ACTUAL EXISTING CONDITION AT SITE.
5. ALL WORK SHOWN IS NEW UNLESS SPECIALLY INDICATED AS EXISTING (X). ALL ELECTRICAL EQUIPMENT MOUNTING AND ANCHORAGE MUST CONFORM WITH LOCAL AND STATE SEISMIC CODES.

E. TELEPHONE SYSTEMS
PROVIDE RACEWAYS, AND ALL MATERIAL INCLUDING PULLING CABLE IN EACH RACEWAY AS REQUIRED FOR THE TELEPHONE SYSTEM PER THE TELEPHONE REQUIREMENTS. ALL CAT 6E CABLES SHALL BE TESTED & MEET CURRENT BICSI STANDARDS, A TEST REPORT SIGNED BY A RCCD SHALL BE PROVIDED WITH THE DOCUMENTATION.

F. GROUNDING & BONDING
FURNISH AND INSTALL COMPLETE BONDING AND GROUNDING SYSTEM AS REQUIRED BY CODES. CONTINUITY OF GROUNDING SHALL BE MAINTAINED MECHANICALLY AND ELECTRICALLY THROUGHOUT THE SYSTEM. A GREEN GROUNDING CODE SIZED CONDUCTOR SHALL BE CARRIED IN ALL CONDUITS.

G. INSTALLATION
1. IT IS THE INTENT OF THESE PLANS AND SPECIFICATIONS THAT A COMPLETE AND WORKABLE ELECTRICAL INSTALLATION BE PROVIDED FOR ALL THE EQUIPMENT DESCRIBED OR SHOWN AS BEING IN THIS CONTRACT. TOWARD THIS END FURNISH ALL LABOR AND TOOLS NECESSARY AND FURNISH AND INSTALL ALL APPARATUS, MATERIALS AND EQUIPMENT IN A FASHION COMPLYING WITH ALL APPLICABLE CODES, INCLUDING ITEMS REQUIRED BUT NOT NORMALLY SHOWN, SUCH AS LAMPS, COUPLINGS, HANGERS, BRACKETS, CLAMPS, BOXES, CONNECTORS AND HARDWARE. REFER ALSO TO WRITTEN SPECIFICATIONS FOR GENERAL, MECHANICAL AND ELECTRICAL SECTIONS.
2. PROCURE ALL PERMITS FROM LEGALLY CONSTITUTED AUTHORITIES, ARRANGE FOR ALL INSPECTIONS AND PAY ALL COSTS FOR FEES AND TESTS IN CONNECTION THEREWITH. COMPLY WITH CODES: NOTHING IN THESE PLANS AUTHORIZES DEVIATION FROM APPLICABLE CODES.
3. DETERMINE EXACT ROUTING OF CONCEALED FEEDERS AND BRANCH HOMERUNS IN COOPERATION WITH OTHER TRADES TO SIMPLIFY INSTALLATION WHEREVER POSSIBLE BUT SUBJECT TO APPROVAL OF ARCHITECT FOR VISUAL AND STRUCTURAL REASONS.
4. PROVIDE A CODE APPROVED DISCONNECT SWITCH OR BREAKER WITHIN SIGHT OF EVERY MOTOR AND FEED MOTORS NOT EQUIPPED WITH "BUILT IN" PROTECTION THROUGH A MAGNETIC OR MANUAL STARTER WITH OVERLOAD HEATERS SIZED TO COMPLY WITH MOTOR MANUFACTURER'S RECOMMENDATIONS AND APPLICABLE CODES.
5. FOR CONNECTIONS TO EXHAUST FANS, PUMPS, COMPRESSORS, SPACE HEATERS, WATER HEATERS, AQUASTATS, SOLENOID VALVES AND OTHER MECHANICAL EQUIPMENT AND FOR CONDUITS AND WIRE REQUIRED BUT NOT NECESSARILY SHOWN ON THESE DRAWINGS REFER TO MECHANICAL PLANS AND DETERMINE EXACT LOCATIONS UNDER DIRECTION OF HEATING AND VENTILATING CONTRACTOR.
6. DO NOT RUN ANY CONDUIT IN SLAB IF ITS OUTSIDE DIAMETER EXCEEDS 1/3 THE THICKNESS OF THE SLAB. LOCATE CONDUITS WITHIN THE MIDDLE OF THE SLAB. WHERE CONDUITS ARE GROUPED IN PARALLEL RUNS, SPACE THEM 3" OR MORE APART. WHERE CONDUITS CROSS EACH OTHER, THICKEN SLAB PROPORTIONATELY OVER A HORIZONTAL AREA EQUAL TO TEN TIMES THE DIAMETER OF THE LARGEST CONDUIT. REFER ALSO TO DETAILS SHOWN..
7. SIZE OUTLET BOXES IN CONFORMITY WITH CODE FOR NUMBER AND GAUGE OF CONDUCTORS THEREIN, EXCEPT WHERE NOTED TO BE LARGER. MINIMUM BOX SIZE SHALL BE 4" SQUARE BY 1-1/2" DEEP.
8. ALL ELECTRICAL WORK SHALL BE INSTALLED SO AS TO BE READILY ACCESSIBLE FOR OPERATING, SERVICING, MAINTAINING AND REPAIRING. ALL CONDUIT SHALL BE CONCEALED WHERE POSSIBLE. EXPOSED CONDUIT SHALL BE IN STRAIGHT LINES PARALLEL WITH, OR AT RIGHT ANGLES TO, COLUMN LINES OR BEAMS AND SEPARATED BY AT LEAST THREE (3) INCHES FROM WATER LINES WHENEVER THEY RUN LONG SIDE OR ACROSS SUCH LINES. CONDUIT SHALL NOT BE RUN BELOW CABLE TRAYS OR LIGHT FIXTURES WITHOUT SPECIFIC APPROVAL OF THE OWNERS REPRESENTATIVE. HANGERS SHALL BE FASTENED TO STEEL, CONCRETE OR MASONRY, BUT NOT TO PIPING. HANGERS AND SUPPORT SYSTEMS ARE AN INTEGRAL PART OF THE VISUAL ENVIRONMENT. ALL HANGERS AND SUPPORTS EXPOSED TO PUBLIC VIEW MUST BE SHOWN IN DETAIL ON PLANS SUBMITTED TO ENGINEER FOR APPROVAL OF APPEARANCE. ALL HANGERS MUST BE UNIFORMLY SPACED AND NEATLY INSTALLED WITH NO EXCESS MATERIAL BEYOND WHAT IS REQUIRED FOR THE SUPPORT FUNCTION. CONTRACTOR SHALL SELECT ACCESSORIES AND HARDWARE WITH A SMOOTH, NEAT FINISHED APPEARANCE AND PAINT ALL EXPOSED CONDUIT HANGERS TO MATCH THE ADJACENT FINISHES.
9. ALL RECEPTACLES SHALL BE MOUNTED AT 18" PER ADA REQUIREMENTS UNLESS NOTED OTHERWISE, MEASURED FROM BOTTOM OF BOX.
10. ALL DISTRIBUTION BOARDS, SWITCHBOARDS AND TRANSFORMERS THAT ARE FLOOR MOUNTED SHALL BE MOUNTED ON 2" THICK HOUSEKEEPING PAD. TRANSFORMER SHALL BE ON VIBRATION ISOLATION PADS AND CONNECTED WITH FLEXIBLE CONDUIT.
11. CONTRACTOR SHALL EXAMINE PLANS AND VERIFY IN FIELD LOCATIONS OF ALL FIRE RATED WALLS, CEILINGS AND FLOORS. CONTRACTOR SHALL SEAL ALL ELECTRICAL SYSTEM PENETRATIONS THROUGH FIRE RATED WALLS, CEILINGS AND FLOORS WITH U.L. LISTED MATERIAL APPROVED BY THE AUTHORITY HAVING JURISDICTION.
12. ALL SWITCHES SHALL BE MOUNTED 36" TO 48" MEASURED FROM BOTTOM & TOP OF BOX RESPECTIVELY.
13. PANEL CIRCUIT DIRECTORY SHALL COMPLY WITH CEC 408.4.
14. PROVIDE 90% COMPACTION OR SAND SLURRY OVER ALL UNDERGROUND CONDUITS, USE ONLY CLEAN FILL.

H. ADDITIONAL NOTES
1. MARKING - UNDERGROUND SYSTEM SHALL BE LEGIBLY MARKED "UNDERGROUND SYSTEM" AT THE SOURCE OR FIRST DISCONNECTING MEANS OF THE SYSTEM. THE MARKING SHALL BE OF SUFFICIENT DURABILITY TO WITHSTAND THE ENVIRONMENT INVOLVED. (250.21)(C)
2. PROVIDE SWITCH AND RECEPTACLE HEIGHTS PER STATE OF CALIFORNIA ACCESSIBLE REQUIREMENTS.
3. THE ISSUANCE OF A PERMIT SHALL NOT PREVENT THE BUILDING OFFICIAL FROM REQUIRING THE CORRECTION OF ERRORS ON THESE PLANS OR FROM PREVENTING ANY VIOLATION OF THE CODES ADOPTED BY THE CITY, RELEVANT LAWS, ORDINANCES, RULES AND/OR REGULATIONS.
4. FOR FIRE RATED WALL/CEILING PENETRATION AND/OR MEMBRANE PENETRATION, COMPLETE NRTL CLASSIFICATION SHEETS SHALL BE PROVIDED TO THE INSPECTOR AT THE TIME OF INSPECTION FOR THE LISTED RATED ASSEMBLY.
5. EACH MULTIWIRE BRANCH CIRCUIT SHALL BE PROVIDED WITH A MEANS THAT WILL SIMULTANEOUSLY DISCONNECT ALL UNGROUNDED CONDUCTORS AT THE PANELBOARD WHERE THE BRANCH CIRCUIT ORIGINATES. (210.4)
6. MULTIWIRE BRANCH CIRCUITS SUPPLYING POWER TO THE PARTITION SHALL BE PROVIDED WITH A MEAN TO DISCONNECT SIMULTANEOUSLY ALL UNGROUNDED CONDUCTORS AT THE PANELBOARD WHERE THE BRANCH CIRCUIT ORIGINATES. (605.7)
7. PROVIDE SEPARATE SUBMITTAL; OBTAIN ALL REQUIRED PERMITS, INSPECTIONS AND APPROVALS FOR ALL FIRE ALARM SYSTEM INSTALLATIONS AND/OR MODIFICATIONS FROM THE FIRE DEPARTMENT.
8. ALL NEW OVERCURRENT DEVICES INSTALLED IN EXISTING PANELS/SWITCHBOARDS SHALL MATCH THE MAKE, MODEL AND INTERRUPTING CAPACITY OF THE EXISTING OVERCURRENT DEVICES.
9. RACEWAY SEALS. CONDUITS OR RACEWAYS THROUGH WHICH MOISTURE MAY CONTACT LIVE PARTS SHALL BE SEALED OR PLUGGED AT EITHER OR BOTH ENDS.
10. ALL 15-20 AMP 120 VOLTS, SINGLE PHASE RECEPTACLES WITHIN KITCHEN AND FOOD PREPARATION AREAS TO BE GFCI PER NEC 210.8.
11. ALL LIGHT FIXTURES WITHIN KITCHEN AND FOOD PREPARATION AREAS TO BE SHATTER PROOF.
12. REFRIGERATION DETECTION - DETECTION AND ALARM SYSTEMS SHALL BE POWERED AND SUPERVISED AS REQUIRED FOR FIRE ALARM SYSTEMS IN THE FIRE CODE. (2016 CMC 1121.2)
13. PROVIDE LOCAL DISCONNECTS FOR ALL HARDWIRED EQUIPMENT THAT IS NOT "WITHIN SIGHT" OF THE SOURCE PANEL.
14. MULTIPLE RACEWAYS CONTAINING MORE THAN 3 CURRENT CARRYING CONDUCTORS SHALL COMPLY WITH [2016 CEC, 310.15(B)(2)(A)].
15. THE IDENTIFICATION OF EVERY CIRCUIT OF A PANEL BOARD AND SWITCHBOARD SHALL BE LEGIBLY IDENTIFIED AS TO ITS CLEAR, EVIDENT, AND SPECIFIC PURPOSE OR USE AND SHALL INCLUDE SUFFICIENT DETAIL TO ALLOW EACH CIRCUIT TO BE DISTINGUISHED FROM ALL OTHERS. 2016 C.E.C 408.4 - PROVIDE MORE DETAIL ON PANEL SCHEDULE CIRCUIT DESCRIPTIONS.
16. A SINGLE RECEPTACLE INSTALLED ON AN INDIVIDUAL BRANCH CIRCUIT SHALL HAVE AN AMPERE RATING OF NOT LESS THAN THAT OF THE BRANCH CIRCUIT. INDICATE THE RECEPTACLE RATING. (210.21(B)(1))
17. PROVIDE RECEPTACLE OUTLETS WHEREVER CORD CONNECTED EQUIPMENT WILL BE USED. (210.50(B))
18. WHERE THE DISCONNECTS ARE NOT PROVIDED WITHIN SIGHT FROM THE EQUIPMENT IT SUPPLIES, THE SWITCH OR CIRCUIT BREAKER MUST INCLUDE PROVISIONS FOR ADDING A LOCK, AND THESE PROVISIONS MUST REMAIN WITH THE EQUIPMENT. THESE LOCKING PROVISIONS HAVE TO BE PART OF THE EQUIPMENT, EITHER INHERENT TO THE EQUIPMENT DESIGN OR AS A ACCESSORY FEATURE THAT CAN BE INSTALLED ON THE EQUIPMENT. [410.141(B), 422.31(B), 424.19, 440.14 EXCEPTION NO. 1, 600.6(A)(2)(3), 620.51(A) EXCEPTION NO. 1, 620.53, 620.55]
19. STANDARD NON-LOCKING STRAIGHT-BLADE RECEPTACLES IN 120- AND 250-VOLT CONFIGURATION AT WET/DAMP LOCATION ARE REQUIRED TO BE LISTED WEATHER-RESISTANT TYPE. [CEC 406.8(A)].

I. FIRE ALARM SYSTEM
1. CONTRACTOR SHALL PROVIDE AND INSTALL A FIRE ALARM SYSTEM FOR THE PROJECT AREA TO INCLUDE:

A) SMOKE DETECTORS IN ALL REQUIRED AREAS
B) HEAT DETECTORS IN ALL REQUIRED AREAS
C) DUCT DETECTORS IN ALL REQUIRED SPACES
D) STROBES/SPEAKERS IN ALL REQUIRED AREAS
E) PULL STATIONS AT ALL REQUIRED LEGAL FIRE EXITS

2. CONTRACTOR SHALL SUBMIT FOR THE OWNERS SIGNED APPROVAL, APPROVED FIRE DEPARTMENT FIRE ALARM DRAWINGS FOR THE PROJECT SPACE.
3. CONTRACTOR SHALL BE BUILDING STANDARD.
4. ALL DEVICES AND EQUIPMENT SHALL BE CALIFORNIA STATE FIRE MARSHALL APPROVED AND CURRENTLY LISTED.
5. CONTRACTOR SHALL WARRANTY ALL DEVICES AND SYSTEMS FOR A PERIOD OF TWO YEARS.
6. CONTRACTOR SHALL PROVIDE 6 (SIX) HARD COPY SETS OF FIRE ALARM MANUALS FOR ALL SYSTEMS AND DEVICES IN ADDITION TO 6 (SIX) HARD COPY SETS OF A SYSTEM OPERATIONAL MANUAL TAILORED FOR THE PROJECT SPACE.
7. CONTRACTOR SHALL PROVIDE AN INDIVIDUALLY ADDRESSABLE TOTALLY SUPERVISED SYSTEM WITH BATTERY BACK-UP FOR 24 HOURS OF MONITORING INITIATING CIRCUITS PLUS 30 MINUTES OF ALARM WITH DUAL RATE BATTERY CHARGER.
8. CONTRACTOR SHALL PROVIDE A SATISFACTORY SYSTEM TEST IN THE PRESENCE OF THE OWNER, FIRE PREVENTION BUREAU AND CONSULTING ENGINEER.
9. CONTRACTOR SHALL PROVIDE A CENTRAL MASTER ANNUNCIATOR PANEL IN THE ELECTRICAL ROOM AND A REMOTE PANEL IN AN AREA PER OWNERS REPRESENTATIVE AND LOCAL FIRE MARSHAL.
10. ANNUNCIATOR PANEL SHALL BE NONGRAPHIC WITH NAMEPLATE AND LED FOR EACH DEVICE ADDRESS, WITH AUDIBLE ALARM AND KEYED SILENCE SWITCH.
11. CONTRACTOR SHALL PROVIDE ALL CONNECTION TO POWER PANELS, CONDUIT AND WIRE AND CONNECTIONS REQUIRED TO PROVIDE AN OPERATIONAL FIRE ALARM SYSTEM.
12. UNIQUELY LABEL ALL ADDRESSABLE DEVICES TO MATCH FIRE ALARM PROGRAMMING & AS BUILTS

SYMBOLS

- DUPLEX RECEPTACLE, WALL MOUNTED @ +18" AFF TO BOTTOM OF DEVICE, NEMA 5-20R U.O.N.
- (2)DATA OUTLETS, 2 GANG 4SD BOX WITH DEVICES AND 4 CAT 6 CABLES FROM JACK TO IDF. PROVIDE 1-1/4"C MINIMUM TO CABLE TRAY OR IDF IF NO CABLE TRAY IS PRESENT.
- SPECIAL OUTLET, TYPE AS REQUIRED BY EQUIPMENT.
- J — JUNCTION BOX (CEILING MTD.) SIZE PER TABLE AND NEC ARTICLE 314
- J — JUNCTION BOX (WALL MTD.) SIZE PER TABLE AND NEC ARTICLE 314
- T — THERMOSTAT - 36" TO 48" AFF, BOTTOM & TOP OF BOX RESPECTIVELY
- T — TRANSFORMER
- J — CLOCK SPEAKER BY ENS-IP-SDMF WITH IP SEA-SD MOUNT PROVIDED BY & INSTALLED BY CONTRACTOR WITH 3/4"C- (1) CAT 5 TO IDF
- BRANCH CIRCUIT PANELBOARD - 240/120V, 1Ø, 3W OR 3Ø, 3W, 240VAC OR 120/208VAC, 3Ø, 4W.
- 4'X8'X3/4" TELEPHONE BACKBOARD, MARINE PLYWOOD AND PAINTED WITH FIRE RESISTANT PAINT, PER OWNERS REPRESENTATIVE.
- CONDUIT RUN CONCEALED ABOVE CEILING OR IN WALLS,
- CONDUIT RUN CONCEALED BELOW FLOOR OR UNDERGROUND
- —E— EMERGENCY CIRCUIT
- —P— POWER CONDUIT & CONDUCTORS
- FLEXIBLE CONDUIT (WITH GROUND CONDUCTOR, PROVIDE LIQUID TIGHT CONDUIT IN ALL EXPOSED AREAS)
- #10 — HASH MARKS INDICATE QUANTITY OF #12 CONDUCTORS. NO HASH MARKS INDICATE (2)#12AWG. (PROVIDE GROUND CONDUCTOR IN ALL CONDUITS.) WHERE NO NUMBER IS INDICATED, THE CONDUCTORS ARE #12AWG(MIN.) CONDUIT SIZE IS AS REQUIRED BY ELECTRICAL CODE. (3/4" CONDUIT MINIMUM).
- 2LA 1-3-5,7 — INDICATES A HOMERUN TO PNL 2LA, CKTS 1-3-5 WITH SHARED NEUTRAL & CKT 7 WITH DEDICATED NEUTRAL.
- 3/4"C-2#12 & 1#12 GND
- 3/4"C-3#12 & 1#12 GND
- 3/4"C-4#12 & 1#12 GND
- 3/4"C-5#12 & 1#12 GND
- #10 — 3/4"C-2#10 & 1#10 GND
- #10 — 3/4"C-3#10 & 1#10 GND
- #10 — 3/4"C-4#10 & 1#10 GND
- #10 — 3/4"C-5#10 & 1#10 GND

(For the above conductor symbols:) 1" CONDUIT MINIMUM IF UNDERGROUND (CONTRACTOR TO PROVIDE DEDICATED NEUTRALS FOR CIRCUITS WHICH DO NOT HAVE COMMON CIRCUIT HANDLE TIES ON BREAKERS FEEDING THE CIRCUITS)

- 1 — SEE KEY NOTE #1 AS INDICATED ON DRAWING
- \$ P — SWITCH WITH PILOT LIGHT @ 42"AFF
- \$ 3ab — 3-WAY SWITCH, a & b INDICATES LIGHT FIXTURE TO BE SWITCHED (EACH A 3-WAY) MOUNTED @ 42" AFF
- \$ — SWITCH MOUNTED @ +42" AFF
- \$ M — MOTOR RATED SWITCH
- \$ a,b,c,d — CIRCUIT SWITCH LEGS; WALL SWITCHES
- 60AS 35AF 3P — DISCONNECT SWITCH, 60AMP SWITCH, 35 AMP FUSE, 3 POLE W/ OVERCURRENT PROTECTION U.O.N.
- M — 100A UTILITY METER (OR AS NOTED)
- 3P 100AS 60AF — FUSED DISCONNECT SWITCH 100AMP SWITCH RATING WITH 60 AMP FUSES, 3 POLE
- 200AF 150AT 3P — MOLDED CASE CIRCUIT BREAKER 200 AMP FRAME, 150 AMP TRIP RATING, 3 POLE
- J CAM — CCTV-VERIFY MOUNTING LOCATION AND REQUIREMENTS WITH CLIENT/OWNER.
- FLOOR BLOCK OUT - FOAM ONLY

COLOR CODE FOR CONDUCTORS

PROVIDE CONDUCTOR COLOR CODE AS FOLLOWS:
120/208VAC,3Ø,4W: BLUE,BLACK,RED FOR PHASE CONDUCTORS AND WHITE FOR NEUTRAL, GREEN FOR GROUND.

277/480VAC,3Ø,4W: ORANGE,BROWN,YELLOW FOR PHASE CONDUCTORS AND WHITE FOR NEUTRAL, GREEN FOR GROUND.

DERATING TABLE

NEC #310-8 ADJUSTMENT FACTORS

(a) MORE THAN THREE CURRENT-CARRYING CONDUCTORS IN A RACEWAY OR CABLE. WHERE THE NUMBER OF CURRENT-CARRYING CONDUCTORS IN A RACEWAY OR CABLE EXCEEDS THREE, THE ALLOWABLE AMPACITIES SHALL BE REDUCED AS SHOWN IN THE FOLLOWING TABLE:

NUMBER OF CURRENT-CARRYING CONDUCTORS	PERCENT OF VALUES IN TABLES AS ADJUSTED FOR AMBIENT TEMPERATURE IF NECESSARY
4 THROUGH 6	80
7 THROUGH 9	70
10 THROUGH 20	50
21 THROUGH 30	45
31 THROUGH 40	40
41 AND ABOVE	35

WHERE SINGLE CONDUCTORS OR MULTICONDUCTOR CABLES ARE STACKED OR BUNDLED LONGER THAN 24 INCHES (610 mm) WITHOUT MAINTAINING SPACING AND ARE NOT INSTALLED IN RACEWAYS, THE ALLOWABLE AMPACITY OF EACH CONDUCTOR SHALL BE REDUCED AS SHOWN IN THE ABOVE TABLE.

EXCEPTION NO. 1: WHERE CONDUCTORS OF DIFFERENT SYSTEMS, AS PROVIDED IN SECTION 300-3, ARE INSTALLED IN A COMMON RACEWAY OR CABLE, THE DERATING FACTORS SHOWN ABOVE SHALL APPLY TO THE NUMBER OF POWER AND LIGHTING (ARTICLES 210, 215, 220, AND 230) CONDUCTORS ONLY.

EXCEPTION NO. 2: FOR CONDUCTORS INSTALLED IN CABLE TRAYS, THE PROVISIONS OF SECTION 318-11 SHALL APPLY.

EXCEPTION NO. 3: DERATING FACTORS SHALL NOT APPLY TO CONDUCTORS IN NIPPLES HAVING A LENGTH NOT EXCEEDING 24 INCHES (610mm).

EXCEPTION NO. 4: DERATING FACTORS SHALL NOT APPLY TO UNDERGROUND CONDUCTORS ENTERING OR LEAVING AN OUTDOOR TRENCH IF THOSE CONDUCTORS HAVE PHYSICAL PROTECTION IN THE FORM OF RIGID METAL CONDUIT, INTERMEDIATE METAL CONDUIT, OR RIGID NONMETALLIC CONDUIT HAVING A LENGTH NOT EXCEEDING 10 FEET (3.05m) ABOVE GRADE AND THE NUMBER OF CONDUCTORS DOES NOT EXCEED FOUR.

EXCEPTION NO. 5: FOR OTHER LOADING CONDITIONS, ADJUSTMENT FACTORS AND AMPACITIES SHALL BE PERMITTED TO BE CALCULATED UNDER SECTION 310-15(b)

(FNC): SEE APPENDIX B, TABLE B-310-11 FOR ADJUSTMENT FACTORS FOR MORE THAN THREE CURRENT-CARRYING CONDUCTORS IN A RACEWAY OR CABLE WITH LOAD DIVERSITY.

(b) MORE THAN ONE CONDUIT, TUBE, OR RACEWAY. SPACING BETWEEN CONDUITS, TUBING, OR RACEWAYS SHALL BE MAINTAINED.

ABBREVIATIONS

A	AMPERES	(F)	FRONT	NO	NORMALLY OPEN
AF	AMP FRAME/AMP FUSE	FA	FIRE ALARM	NC	NORMALLY CLOSED
AFC	AVAILABLE FAULT CURRENT	FS	SHALLOW FLOOR BOX	OH	OVERHEAD
AFF	ABOVE FINISHED FLOOR	FT	FEET	P	POWER OR POLE
AIC	AMP INTERRUPTING CURRENT	GC	GENERAL CONTRACTOR	PBO	PROVIDED BY OTHERS
ARCH	ARCHITECT	GFI	GROUND FAULT INTERRUPTER	PNL	PANEL
AS	AMP SWITCH	GND	GROUND	PV	PHOTO VOLTAIC
ASTM	AMERICAN SOCIETY OF TESTING MATERIAL(S)	HP	HORSEPOWER	(R)	REMOVED
AT	AMP TRIP	ID	IDENTIFICATION	RGS	RIGID GALVANIZED STEEL CONDUIT
ATS	AUTOMATIC TRANSFER SWITCH	IDF	INTERMEDIATE DISTRIBUTION FRAME	RM	ROOM
AWG	AMERICAN WIRE GAGE	IG	ISOLATED GROUND	SN	SYSTEM NEUTRAL
BKBD	BACKBOARD	JB	JUNCTION BOX	SPD	SURGE PROTECTION DEVICE
C	CONDUIT OR CEILING	K	KILO	TC	TIME CLOCKS
CB	CIRCUIT BREAKER	KVA	KILO VOLT AMPS=1000VA	TTB	TELEPHONE TERMINAL BOARD
CONT	CONTINUATION	LC	LIGHTING CONTACTOR	TTC	TELEPHONE TERMINAL CABINET
CKT	CIRCUIT	LCL	LONG CONTINUOUS LOAD	TR	TRANSFORMER
CLG	CEILING	LV	LOW VOLTAGE	TVSS	TRANSIENT VOLTAGE SURGE SUPPRESSOR
CO	CONDUIT ONLY	M	METER		
CTV	CABLE TELEVISION	MC	METAL CLAD	TYP	TYPICAL
(CU)	COPPER	MDF	MAIN DISTRIBUTION FRAME	UG	UNDERGROUND
CW	COLD WATER PIPE	MIN.	MINIMUM	UL	UNDERWRITERS LABORATORY
DIS	DISCONNECT	MTD	MOUNTED	UON	UNLESS OTHERWISE NOTED
DS	DISCONNECT SWITCH	MTB	MAIN TELEPHONE BACKBOARD	UNSW	UNSWITCHED
DWG	DRAWING	MTG	MOUNTING	V	VOLTS/VOLTAGE
ECD	ELECTRICAL CONTRACTOR	MV	MEDIUM VOLTAGE	VA	VOLT AMPS
EM	EMERGENCY LIGHT/FEEDER	MH	MAN HOLE	VD	VOLTAGE DROP
EMT	ELECTRICAL METAL TUBING	MFG	MANUFACTURER	W	WATTS/WATTAGE OR WIRE
EOR	ENGINEER OF RECORD	NEC	NATIONAL ELECTRICAL CODE	WP	WEATHERPROOF
EPR	ETHYLENE PROPYLENE RUBBER	(N)	NEW	W/	WITH
EVCS	ELECTRIC VEHICLE CHARGING STATION	NIC	NOT IN CONTRACT	(X)	EXISTING
		NL	NIGHT LIGHT	ɸ	PHASE

LIST OF DRAWINGS

SHEET #	SHEET DESCRIPTION	SHEET #	SHEET DESCRIPTION
E100	GENERAL NOTES, ABBREVIATIONS, SYMBOLS & DRAWING LIST	E500	FIRE ALARM NOTES & SCHEDULE
E101	CALIFORNIA GREEN CODE ELECTRICAL	E501	FIRE ALARM PLAN
E130	SITE LIGHTING PLAN EXISTING CONDITION	E502	FIRE ALARM DETAIL SHEET
E131	SITE LIGHTING PLAN NEW WORK	E503	FIRE ALARM DATA SHEETS
E132	STEM MODULAR EM PHOTOMETRIC PLAN & SITE PHOTOMETRIC PLAN	E504	FIRE ALARM DATA SHEETS
E140	SITE POWER & COM PLAN	E506	FIRE ALARM RISER DIAGRAM, VOLTAGE DROP, AND BATTERY CALCULATION
E200	ELECTRICAL SINGLE LINE DIAGRAM - EXISTING WITH NEW WORK	E507	FIRE ALARM DATA SHEETS
E300	LIGHTING FIXTURE SCHEDULE & SCHEMATIC PLAN	E508	FIRE ALARM DATA SHEETS
E400	BUILDING POWER & COM PLAN	E509	FIRE ALARM DATA SHEETS
E420	MECHANICAL POWER PLAN, NOTES AND SCHEDULE	E510	FIRE ALARM DATA SHEETS
		E601	ELECTRICAL DETAILS
		E604	LIGHT POLE FOOTING DETAIL

SCOPE OF WORK

NEW SINGLE STORY CLASSROOM BUILDING WITH POWER, LIGHTING & COM.

LIST OF APPLICABLE CODES

LIST OF APPLICABLE CODES

2022 CALIFORNIA ADMINISTRATIVE CODE (CAC), PART 1, TITLE 24 CCR
2022 CALIFORNIA BUILDING CODE (CBC), PART 2, TITLE 24 CCR
2022 CALIFORNIA ELECTRICAL CODE (CEC), PART 3, TITLE 24 CCR
2022 CALIFORNIA MECHANICAL CODE (CMC), PART 4, TITLE 24 CCR
2022 CALIFORNIA PLUMBING CODE (CPC), PART 5, TITLE 24 CCR
2022 CALIFORNIA ENERGY CODE, PART 6, TITLE 24 CCR
2022 CALIFORNIA FIRE CODE (CFC), PART 9, TITLE 24 CCR
2022 CALIFORNIA EXISTING BUILDING CODE (CEBC), PART 10, TITLE 24 CCR
2022 CALIFORNIA GREEN BUILDING STANDARDS CODE (CALGREEN), PART 11, TITLE 24 CCR
2022 CALIFORNIA REFERENCED STANDARDS CODE, PART 12, TITLE 24 CCR
TITLE 19 CCR, PUBLIC SAFETY, STATE FIRE MARSHAL REGULATIONS

APPLICABLE STANDARDS

FOR A LIST OF APPLICABLE STANDARDS, INCLUDING CALIFORNIA AMENDMENTS TO THE NFPA STANDARDS, REFER TO CBC CHAPTER 35 AND CFC CHAPTER 80.

MEP ANCHORAGE NOTES

APPLICABLE CODE: 2022 CBC

MEP COMPONENT ANCHORAGE NOTE

ALL MECHANICAL, PLUMBING, AND ELECTRICAL COMPONENTS SHALL BE ANCHORED AND INSTALLED PER THE DETAILS ON THE DSA-APPROVED CONSTRUCTION DOCUMENTS. THE FOLLOWING COMPONENTS SHALL BE ANCHORED OR BRACED TO MEET THE FORCE AND DISPLACEMENT REQUIREMENTS PRESCRIBED IN THE 2022 CBC SECTIONS 1617A.1.18 THROUGH 1617A.1.26 AND ASCE 7-16 CHAPTERS 13, 26, AND 30:

1. ALL PERMANENT EQUIPMENT AND COMPONENTS.
2. TEMPORARY, MOVABLE OR MOBILE EQUIPMENT THAT IS PERMANENTLY ATTACHED (E.G., HARD WIRED) TO THE BUILDING UTILITY SERVICES SUCH AS ELECTRICITY, GAS OR WATER. "PERMANENTLY ATTACHED" SHALL INCLUDE ALL ELECTRICAL CONNECTIONS EXCEPT PLUGS FOR 110/220 VOLT RECEPTACLES HAVING A FLEXIBLE CABLE.
3. TEMPORARY, MOVABLE OR MOBILE EQUIPMENT WHICH IS HEAVIER THAN 400 POUNDS OR HAS A CENTER OF MASS LOCATED 4 FEET OR MORE ABOVE THE ADJACENT FLOOR OR ROOF LEVEL THAT DIRECTLY SUPPORT THE COMPONENT IS REQUIRED TO BE RESTRAINED IN A MANNER APPROVED BY DSA.

THE FOLLOWING MECHANICAL AND ELECTRICAL COMPONENTS SHALL BE POSITIVELY ATTACHED TO THE STRUCTURE BUT NEED NOT DEMONSTRATE DESIGN COMPLIANCE WITH THE REFERENCES NOTED ABOVE. THESE COMPONENTS SHALL HAVE FLEXIBLE CONNECTIONS PROVIDED BETWEEN THE COMPONENT AND ASSOCIATED DUCTWORK, PIPING, AND CONDUIT. FLEXIBLE CONNECTIONS MUST ALLOW MOVEMENT IN BOTH TRANSVERSE AND LONGITUDINAL DIRECTIONS:

A. COMPONENTS WEIGHING LESS THAN 400 POUNDS AND HAVING A CENTER OF MASS LOCATED 4 FEET OR LESS ABOVE THE ADJACENT FLOOR OR ROOF LEVEL THAT DIRECTLY SUPPORT THE COMPONENT.
B. COMPONENTS WEIGHING LESS THAN 20 POUNDS, OR IN THE CASE OF DISTRIBUTED SYSTEMS, LESS THAN 5 POUNDS PER FOOT, WHICH ARE SUSPENDED FROM A ROOF OR FLOOR OR HUNG FROM A WALL.

THE ANCHORAGE OF ALL MECHANICAL, ELECTRICAL AND PLUMBING COMPONENTS SHALL BE SUBJECT TO THE APPROVAL OF THE DESIGN PROFESSIONAL IN GENERAL RESPONSIBLE CHARGE OR STRUCTURAL ENGINEER DELEGATED RESPONSIBILITY AND ACCEPTANCE BY DSA. THE PROJECT INSPECTOR WILL VERIFY THAT ALL COMPONENTS AND EQUIPMENT HAVE BEEN ANCHORED IN ACCORDANCE WITH THE ABOVE REQUIREMENTS.

APPLICABLE CODE: 2022 CBC

PIPING, DUCTWORK, AND ELECTRICAL DISTRIBUTION SYSTEM BRACING NOTE

PIPING, DUCTWORK, AND ELECTRICAL DISTRIBUTION SYSTEMS SHALL BE BRACED TO COMPLY WITH THE FORCES AND DISPLACEMENTS PRESCRIBED IN ASCE 7-16 SECTION 13.3 AS DEFINED IN ASCE 7-16 SECTIONS 13.6.5, 13.6.6, 13.6.7, 13.6.8; AND 2022 CBC, SECTIONS 1617A.1.24, 1617A.1.25 AND 1617A.1.26.

THE METHOD OF SHOWING BRACING AND ATTACHMENTS TO THE STRUCTURE FOR THE IDENTIFIED DISTRIBUTION SYSTEM ARE AS NOTED BELOW. WHEN BRACING AND ATTACHMENTS ARE BASED ON A PREAPPROVED INSTALLATION GUIDE (E.G., HCAI OPM FOR 2013 CBC OR LATER), COPIES OF THE BRACING SYSTEM INSTALLATION GUIDE OR MANUAL SHALL BE AVAILABLE ON THE JOBSITE PRIOR TO THE START OF AND DURING THE HANGING AND BRACING OF THE DISTRIBUTION SYSTEMS. THE STRUCTURAL ENGINEER OF RECORD SHALL VERIFY THE ADEQUACY OF THE STRUCTURE TO SUPPORT THE HANGER AND BRACE LOADS.

MECHANICAL PIPING (MP), MECHANICAL DUCTS (MD), PLUMBING PIPING (PP), ELECTRICAL DISTRIBUTION SYSTEMS (E):

MP ☐ MD ☐ PP ☐ E ☒ OPTION 1: DETAILED ON THE APPROVED DRAWINGS WITH PROJECT SPECIFIC NOTES AND DETAILS.

MP ☐ MD ☐ PP ☐ E ☐ OPTION 2: SHALL COMPLY WITH HCAI (OSHPD) PREAPPROVAL (OPM #) #____________, AS INCLUDED IN THESE DRAWINGS WITH PROJECT-SPECIFIC NOTES AND DETAILS.

SITE/AREA MAP

N

PROJECT AREA

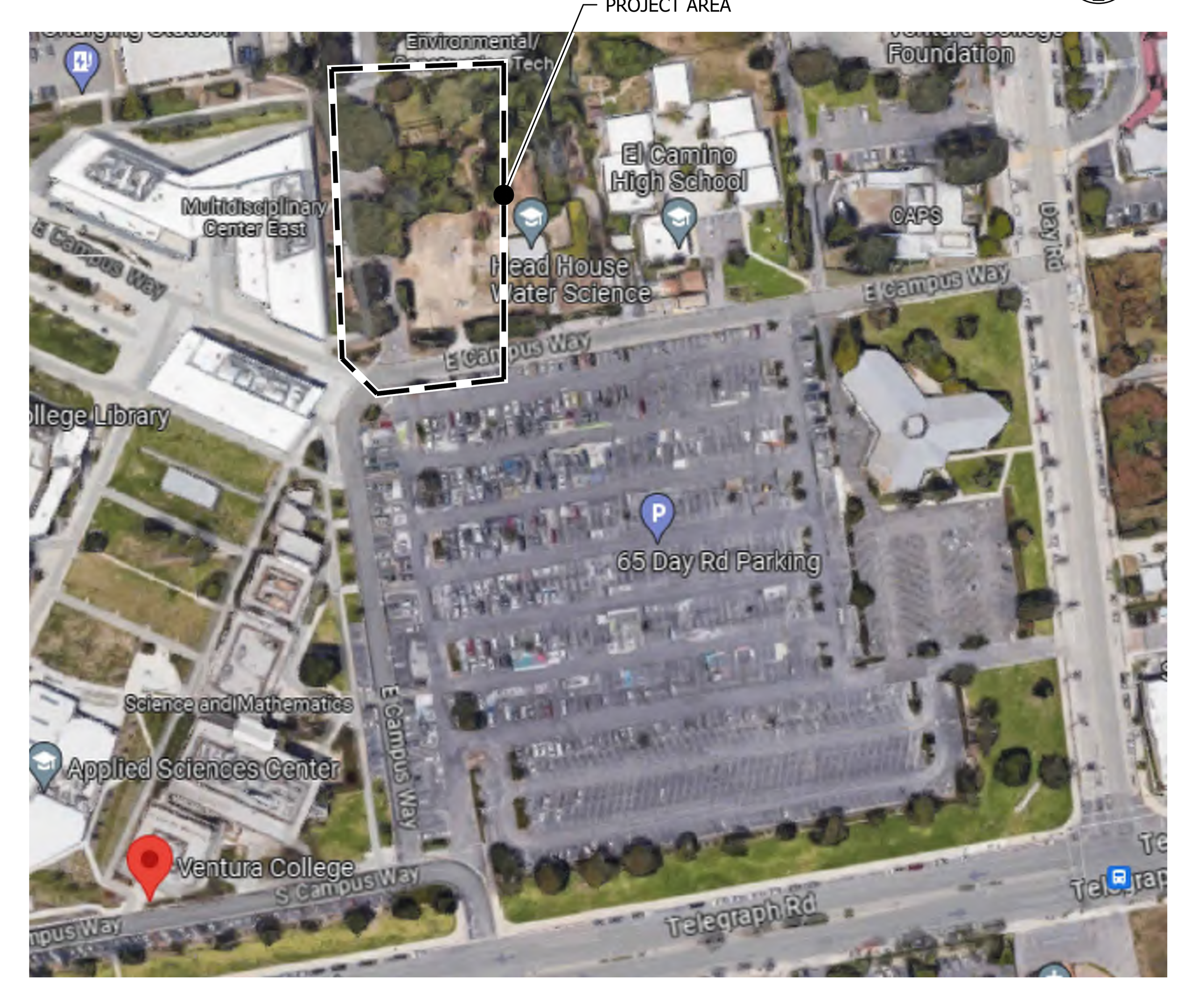

DIVISION OF THE STATE ARCHITECT

IDENTIFICATION STAMP
DIV. OF THE STATE ARCHITECT
APP: 03-124589 INC:
REVIEWED FOR
SS ☑ FLS ☑ ACS ☑
DATE: 04/15/2025

VENTURA COUNTY COMMUNITY COLLEGE DISTRICT • MOORPARK OXNARD VENTURA

VENTURA COUNTY COMMUNITY COLLEGE DISTRICT
761 EAST DAILY DRIVE
CAMARILLO, CALIFORNIA 93010
TEL: (805) 652-5500

PROJECT TITLE AND SCHOOL LOCATION

VENTURA COMMUNITY COLLEGE STEM MODULAR BUILDING
VENTURA COMMUNITY COLLEGE
4667 TELEGRAPH RD.
VENTURA, CA 93003

COMMISSIONED ARCHITECT

AMADOR

amador whittle architects, inc.
28328 AGOURA RD, 203 | AGOURA HILLS CA, 91301 | 805-558-4334

CONSULTANT

LUCCI & ASSOCIATES INC.
CONSULTING ELECTRICAL ENGINEERS
3251 CORTE MALPASO, #511
CAMARILLO, CA 93012-8094
(805) 389-6520 FAX (805) 389-6519

LUCCI & ASSOCIATES, INC. reserve their commonlaw copyright and other property rights in these plans. These plans and drawings are not to be reproduced, changed, or copied in any form or manner whatsoever without first obtaining the expressed written permission and consent of LUCCI & ASSOC. INC nor are they to be assigned to any third party without obtaining said written permission and consent.

STAMPS/SEALS

REGISTERED PROFESSIONAL ENGINEER
KENNETH W. LUCCI
No. E 8340
Exp. 09/30/2026
ELECTRICAL
STATE OF CALIFORNIA

LICENSED ARCHITECT
WILLIAM JORGE AMADOR
C-20348
JANUARY 31, 2027
RENEWAL DATE
STATE OF CALIFORNIA

DSA V3 SUBMITTAL 03/21/2025

SHEET TITLE:

GENERAL NOTES, ABBREVIATIONS, SYMBOLS & DRAWING LIST

PROJECT NO.:	22-VCCCD-08	PROJECT ARCH:	Designer
DRAWN:	LK/DS/IT	CHECKED:	KL

SHEET NUMBER:

E100

DATE: 12/20/24 SHEET: ____ OF ____

TIME: 4:14 pm DATE: 20 December 2024 PATHNAME: G:\22\539\EL\Sheets DRAWING FILENAME: 22-539E100 DRAFTER: CM02

Drafter:CM02 Paper Size: 12,9
Drawing:G:\22\539\EL\Sheets\22-539E100.dwg
Dec 20, 2024, 4:14pm
Attached XREFS:
XREF:G:\22\539\EL\Xrefs\22-539TB.dwg

Drafter: CM01: G:\22\539\EL\Sheets\22-539E100.dwg: DATE: DEC 10, 2024 TIME: 2:49 PM

Copyright Lucci and Associates Consulting Electrical Engineers. Deviations from this drawing will not be made without their expressed written permission.

L.A.I.# 22-539 PAPER SIZE 42"x30"

STATE OF CALIFORNIA

Electrical Power Distribution

CALIFORNIA ENERGY COMMISSION

CERTIFICATE OF COMPLIANCE		NRCC-ELC-E
Project Name: ventura college stem 1 building	**Report Page:**	**(Page 4 of 5)**
	Date Prepared:	2024-09-03T17:43:40-04:00

I. CIRCUIT CONTROLS FOR 120-VOLT RECEPTACLES AND CONTROLLED RECEPTACLES

This table includes entirely new or complete replacement electrical power distribution systems to demonstrate compliance with 130.5(d)/ 160.6(d).. Both controlled and uncontrolled receptacles must be provided in office areas, lobbies, conference rooms, kitchen areas in office spaces, copy rooms and hotel/motel guest rooms.

01	02	03	04	05	06	07	
Room name or Description	Location/ Type of Controlled Receptacles[1]	Shut-Off Controls	Demand Responsive Controls	Permanent Durable Marking Will be Used	Location of Requirements in Construction Documents	Field Inspector	
						Pass	Fail
				☐		☐	☐

** NOTES: If "Other*" is selected under Shut-Off Controls above, please indicate how compliance has been achieved in the space provided below.*

[1] FOOTNOTES: Receptacles dedicated to refrigerators and water dispensers in kitchens, located a minimum of 6ft above the floor specifically for clocks, network copiers, fax machines, A/V and data equipment other than personal computers in copy rooms, circuits rated more than 20 Amps, or connected to a UPS that are intended to be in continuous use and are marked to differentiate them from other receptacles or circuits are excepted from the requirements. .

K. DECLARATION OF REQUIRED CERTIFICATES OF INSTALLATION

Selections have been made based on information provided in this document. If any selection have been changed by permit applicant, an explanation should be included in Table E. Additional Remarks. These documents must be provided to the building inspector during construction and can be found online

Form/Title
NRCI-ELC-E - Must be submitted for all buildings

L. DECLARATION OF REQUIRED CERTIFICATES OF ACCEPTANCE

There are no forms required for this project.

Not useable for compliance

STATE OF CALIFORNIA

Electrical Power Distribution

CALIFORNIA ENERGY COMMISSION

CERTIFICATE OF COMPLIANCE		NRCC-ELC-E
Project Name: ventura college stem 1 building	**Report Page:**	**(Page 5 of 5)**
Project Address: 7667 Telegraph Road, Ventura CA 93003	**Date Prepared:**	2024-09-03T17:43:40-04:00

DOCUMENTATION AUTHOR'S DECLARATION STATEMENT

I certify that this Certificate of Compliance documentation is accurate and complete.

Documentation Author Name: Kenneth Lucci	Documentation Author Signature:
Company: Lucci & Associates	Signature Date: 9-4-24
Address:	CEA/ HERS Certification Identification (if applicable):
City/State/Zip:	Phone:

RESPONSIBLE PERSON'S DECLARATION STATEMENT

I certify the following under penalty of perjury, under the laws of the State of California:

1. The information provided on this Certificate of Compliance is true and correct.
2. I am eligible under Division 3 of the Business and Professions Code to accept responsibility for the building design or system design identified on this Certificate of Compliance (responsible designer)
3. The energy features and performance specifications, materials, components, and manufactured devices for the building design or system design identified on this Certificate of Compliance conform to the requirements of Title 24, Part 1 and Part 6 of the California Code of Regulations.
4. The building design features or system design features identified on this Certificate of Compliance are consistent with the information provided on other applicable compliance documents, worksheets, calculations, plans and specifications submitted to the enforcement agency for approval with this building permit application.
5. I will ensure that a completed signed copy of this Certificate of Compliance shall be made available with the building permit(s) issued for the building, and made available to the enforcement agency for all applicable inspections. I understand that a completed signed copy of this Certificate of Compliance is required to be included with the documentation the builder provides to the building owner at occupancy.

Responsible Designer Name: kenneth lucci	Responsible Designer Signature:
Company:	Date Signed: 9-4-24
Address:	License:
City/State/Zip:	Phone:

Not useable for compliance

Electrical Power Distribution Mandatory Measures:

110.12(a) DEMAND RESPONSIVE (DR) CONTROLS

ALL DEMAND RESPONSIVE CONTROLS SHALL:

1. BE EITHER A. CERTIFIED OPENADR 2.0a OR OPENADR 2.0b VIRTUAL END NODE (VEN); OR B. CERTIFIED BY THE MANUFACTURER AS BEING CAPABLE OF RESPONDING TO A DR SIGNAL FROM A CERTIFIED OPENADR 2.0b VEN AUTOMATICALLY IMPLEMENTING THE CONTROL FUNCTIONS REQUESTED BY THE VEN FOR THE EQUIPMENT IT CONTROLS.
2. BE CAPABLE OF COMMUNICATING USING ONE OR MORE OF THE FOLLOWING: WI-FI, ZIGBEE, BACNET, ETHERNET, OR HARD-WIRING.
3. CONTINUE TO PERFORM ALL OTHER CONTROL FUNCTIONS PROVIDED BY THE CONTROL WHEN COMMUNICATIONS ARE DISABLED OR UNAVAILABLE.
4. DR CONTROL THERMOSTATS SHALL COMPLY WITH REFERENCE JOINT APPENDIX 5 (JA5), TECHNICAL SPECIFICATIONS FOR OCCUPANT CONTROLLED SMART THERMOSTATS.

110.12(d) DEMAND RESPONSIVE ELECTRONIC MESSAGE CENTER CONTROL

CONTROLS FOR ELECTRONIC MESSAGE CENTERS GREATER THAN 15KW SHALL BE CAPABLE OF REDUCING THE LIGHTING POWER BY A MINIMUM OF 30% WHEN RECEIVING A DR SIGNAL.

130.5(b) SEPARATION OF CIRCUITS FOR ELECTRICAL ENERGY MONITORING

ELECTRICAL POWER DISTRIBUTION SYSTEMS SHALL BE DESIGNED SO THAT MEASUREMENT DEVICES CAN MONITOR ENERGY USE OF LOAD TYPES ACCORDING TO TABLE 130.5-B.

130.5(c) VOLTAGE DROP

THE MAXIMUM COMBINED VOLTAGE DROP ON BOTH INSTALLED FEEDER AND BRANCH CIRCUIT CONDUCTORS TO THE FARTHEST CONNECTED LOAD OR OUTLET SHALL NOT EXCEED 5%.

130.5(d) CIRCUIT CONTROLS FOR 120-VOLT RECEPTACLES AND CONTROLLED RECEPTACLES

BOTH CONTROLLED AND UNCONTROLLED 120-VOLT RECEPTACLES SHALL BE PROVIDED IN OFFICE AREAS, LOBBIES, CONFERENCE ROOMS, KITCHEN AREAS IN OFFICE SPACES, AND COPY ROOMS.

CONTROLLED RECEPTACLES SHALL:

- BE CAPABLE OF AUTOMATICALLY SHUTTING OFF WHEN THE SPACE IS UNOCCUPIED, EITHER AT RECEPTACLE OR CIRCUIT LEVEL. AUTOMATIC TIME SWITCH CONTROL SHALL INCORPORATE OVERRIDE CONTROL ALLOWING CONTROLLED RECEPTACLE TO REMAIN ON FOR NO MORE THAN 2 HOURS AND AN AUTOMATIC HOLIDAY SHUT-OFF TO TURN OFF ALL LOADS FOR AT LEAST 24 HOURS THEN RESUME NORMAL SCHEDULE. COUNTDOWN TIMER SWITCHES SHALL NOT BE USED FOR COMPLIANCE.
- EITHER A SPLITWIRE RECEPTACLE SHALL BE INSTALLED, OR AT LEAST ONE CONTROLLED RECEPTACLE SHALL BE INSTALLED WITHIN 6 FT OF EACH UNCONTROLLED RECEPTACLE. FOR MODULAR FURNITURE, INSTALL ONE CONTROLLED RECEPTACLE PER WORKSTATION.
- INCLUDE PERMANENT AND DURABLE MARKINGS TO DIFFERENTIATE THEM FROM UNCONTROLLED RECEPTACLES OR CIRCUITS.

NOTE: HARDWIRED POWER STRIP CONTROLLED BY AN OCCUPANT SENSING CONTROL MAY BE USED TO COMPLY WITH 130.5(d). PLUG-IN DEVICES MAY NOT BE USED FOR COMPLIANCE.

STATE OF CALIFORNIA

Electrical Power Distribution

CALIFORNIA ENERGY COMMISSION

CERTIFICATE OF COMPLIANCE		NRCC-ELC-E

This document is used to demonstrate compliance with mandatory requirements in 130.5, for electrical systems in newly constructed nonresidential and hotel/motel occupancies and 160.6 and 160.9 for electrical systems in newly constructed multifamily occupancies. Additions and alterations to electrical service systems in nonresidential and hotel/motel occupancies will also use this document to demonstrate compliance per 141.0(a) or 141.0(b)2P for alterations. For multifamily addition or alterations compliance will be documented per 180.1(a) or 180.2 (b)4Bvii

Project Name: ventura college stem 1 building	**Report Page:**	**(Page 1 of 5)**
Project Address:	**Date Prepared:**	2024-09-03T17:43:40-04:00

A. GENERAL INFORMATION

01	Project Location (city)	ventura	02	Climate Zone	6
			03	Occupancy Types Within Project:	Classroom

B. PROJECT SCOPE

This table includes electrical systems that are within the scope of the permit application.

01	02	03	04	05	06	07
Electrical Service Designation/ Description	Scope of Work[1]	Rating[2] (kVA)	Utility Provided Metering System Exception to 130.5(a)/ 160.6(a)[3]	System subject to CA Elec Code Article 517 Exception to 130.5(a)and (b)	Demand Response Controls	Provides power to dwelling units/common living areas only in multifamily occupancy
the power service is north about 200 feet from the new building	Complete replacement service equipment, no meter change	35	☐	☐	Where required, demand response controls must be specified which are capable of receiving and automatically responding to at least one standards based messaging protocol which enables demand response after receiving a demand response signal. Sections 120.2/ 160.3, 130.1/ 160.5, and 130.3/ 160.5, and mechanical, indoor lighting, and sign lighting Certificate of Compliance documents will indicate when demand response controls are required.	☐

[1]FOOTNOTES: Adding only new feeders and branch circuits triggers Voltage Drop 130.5(c)/160.6(c), no other requirements from 130.5/160.6 are required.
[2] If common use areas in a multifamily are submetered, rating is for submeter size serving common use areas.
[3] Applicable if the utility company is providing a metering system that indicates instantaneous kW demand and kWh for a utility-defined period.

Not useable for compliance

STATE OF CALIFORNIA

Electrical Power Distribution

CALIFORNIA ENERGY COMMISSION

CERTIFICATE OF COMPLIANCE		NRCC-ELC-E
Project Name: ventura college stem 1 building	**Report Page:**	**(Page 2 of 5)**
	Date Prepared:	2024-09-03T17:43:40-04:00

C. COMPLIANCE RESULTS

Results in this table are automatically calculated from data input and calculations in Tables F through J. Note: If any cell on this table says "COMPLIES with Exceptional Conditions" refer to Table D. Exceptional Conditions for guidance or see applicable Table referenced below.

01		02		03		04	05	06
Service Electrical Metering 130.5(a)/ 160.6(a) (See Table F)	AND	Separation for Monitoring 130.5(b)/ 160.6(b) (See Table G)	AND	Voltage Drop 130.5(c)/ 160.6(c) (See Table H)	AND	Controlled Receptacles 130.5(d)/ 160.6(d) (See Table I)	Electric Ready 160.9 (See Table J)	**Compliance Results**
	AND	Yes	AND	Yes	AND	No		DOES NOT COMPLY

D. EXCEPTIONAL CONDITIONS

This table is auto-filled with uneditable comments because of selections made or data entered in tables throughout the form.

E. ADDITIONAL REMARKS

This table includes remarks made by the permit applicant to the Authority Having Jurisdiction.

{General Remarks} The other areas are the responsibility of the building manufacturers as he is doing the interior work.

Not useable for compliance

STATE OF CALIFORNIA

Electrical Power Distribution

CALIFORNIA ENERGY COMMISSION

CERTIFICATE OF COMPLIANCE		NRCC-ELC-E
Project Name: ventura college stem 1 building	**Report Page:**	**(Page 3 of 5)**
	Date Prepared:	2024-09-03T17:43:40-04:00

G. SEPARATION OF ELECTRICAL CIRCUITS FOR ENERGY MONITORING

This table includes entirely new or complete replacement electrical power distribution systems to demonstrate compliance with 130.5(b)/ 160.6(b). Any load types that are not included in the service do not need to be shown. For multifamily occupancies, submetered systems that provide power to dwelling units do not need to meet these separation requirements and therefore load types on those submetered systems also do not need to be shown.

01	02	03	04	05	
Load Type per Table 130.5-B[1]	Minimum Required Separation of Load per Table 130.5-B	Compliance Method[2]	Location of Requirements in Construction Documents	Field Inspector	
				Pass	Fail
the power service is north about 200 feet from the new building					
Plug Loads and appliances less than 25kVA	not required			☐	☐

** NOTES: If "Other*" is selected under Compliance Method above, please indicate how compliance has been achieved in the space provided below.*

[1] FOOTNOTES: For each separate load type, up to 10% of the connected load may be of any type.
[2] Method 1: Switchboards/ motor control centers/ panelboard loads disaggregated for each load type.
Method 2: Switchboards/ motor control centers/ panelboard supply other distribution equipment with loads disaggregated for each load type.
Method 3: Branch circuits serve load types individually and provisions for adding future branch circuit monitoring.
Method 4: Complete metering system measures and reports loads by type.
See Chapter 8 of the Nonresidential Compliance Manual for more detail on Compliance Methods.

H. VOLTAGE DROP

This table includes entirely new or complete replacement electrical power distribution systems, or alterations that add, modify or replace both feeders and branch circuits to demonstrate compliance with 130.5(c)/ 160.6(c). For alterations, only the altered circuits must demonstrate compliance per 141.0(b)2Piii/ 180.2(b)4Bviic.

01	02				03	04	05	
Electrical Service Designation/Description	Combined Voltage Drop on Installed Feeder/Branch Circuit Conductors Compliance Method				Location of Voltage Drop Calculations[1]	Sheet Number for Voltage Drop Calculations in Construction Documents	Field Inspector	
							Pass	Fail
the power service is north about 200 feet from the new building	☒	Voltage drop less than 5%	☐	Permitted by CA Elec Code (Exception to 130.5(c))*	In construction documents	E200	☐	☐

** NOTES: If "Permitted by CA Elec Code *" is selected under Compliance Method above, please indicate where the exception applies in the space provided below.*

[1] FOOTNOTES: Voltage drop calculations may be attached to the permit application outside the construction documents if allowed by the Authority Having Jurisdiction. Select "attached" if applicable. If calculations will be the responsibility of the installing contractor, select "Contractor Responsible".

Not useable for compliance

DIVISION OF THE STATE ARCHITECT

IDENTIFICATION STAMP DIV. OF THE STATE ARCHITECT
APP: 03-124589 INC:
REVIEWED FOR
SS ☑ FLS ☑ ACS ☑
DATE: 04/15/2025

VENTURA COUNTY COMMUNITY COLLEGE DISTRICT
761 EAST DAILY DRIVE
CAMARILLO, CALIFORNIA 93010
TEL: (805) 652-5500

PROJECT TITLE AND SCHOOL LOCATION

VENTURA COMMUNITY COLLEGE STEM MODULAR BUILDING
VENTURA COMMUNITY COLLEGE
4667 TELEGRAPH RD.
VENTURA, CA 93003

COMMISSIONED ARCHITECT

AMADOR
amador whittle architects, inc.
28328 AGOURA RD, 203 | AGOURA HILLS CA, 91301 | 805-558-4334

CONSULTANT

LUCCI & ASSOCIATES INC.
CONSULTING ELECTRICAL ENGINEERS
3251 CORTE MALPASO, #511
CAMARILLO, CA 93012-8094
(805) 389-6520 FAX (805) 389-6519

LUCCI & ASSOCIATES, INC. reserve their commonlaw copyright and other property rights in these plans. These plans and drawings are not to be reproduced, changed, or copied in any form or manner whatsoever without first obtaining the expressed written permission and consent of LUCCI & ASSOC. INC nor are they to be assigned to any third party without obtaining said written permission and consent.

STAMPS/SEALS

REGISTERED PROFESSIONAL ENGINEER KENNETH W. LUCCI No. E 8340 Exp. 09/30/2026 ELECTRICAL STATE OF CALIFORNIA

LICENSED ARCHITECT WILLIAM JORGE AMADOR C-20348 JANUARY 31, 2027 RENEWAL DATE STATE OF CALIFORNIA

DSA V3 SUBMITTAL 03/21/2025

SHEET TITLE:

CALIFORNIA GREEN CODE ELECTRICAL

PROJECT NO.: 22-VCCCD-08	PROJECT ARCH: Designer
DRAWN: LK/DS/IT	CHECKED: KL
SHEET NUMBER: **E101**	
DATE: 12/20/24	SHEET: ___ OF ___

Copyright Lucci and Associates Consulting Electrical Engineers. Deviations from this drawing will not be made without their expressed written permission.

L.A.I.# 22-539 PAPER SIZE 42"x30"

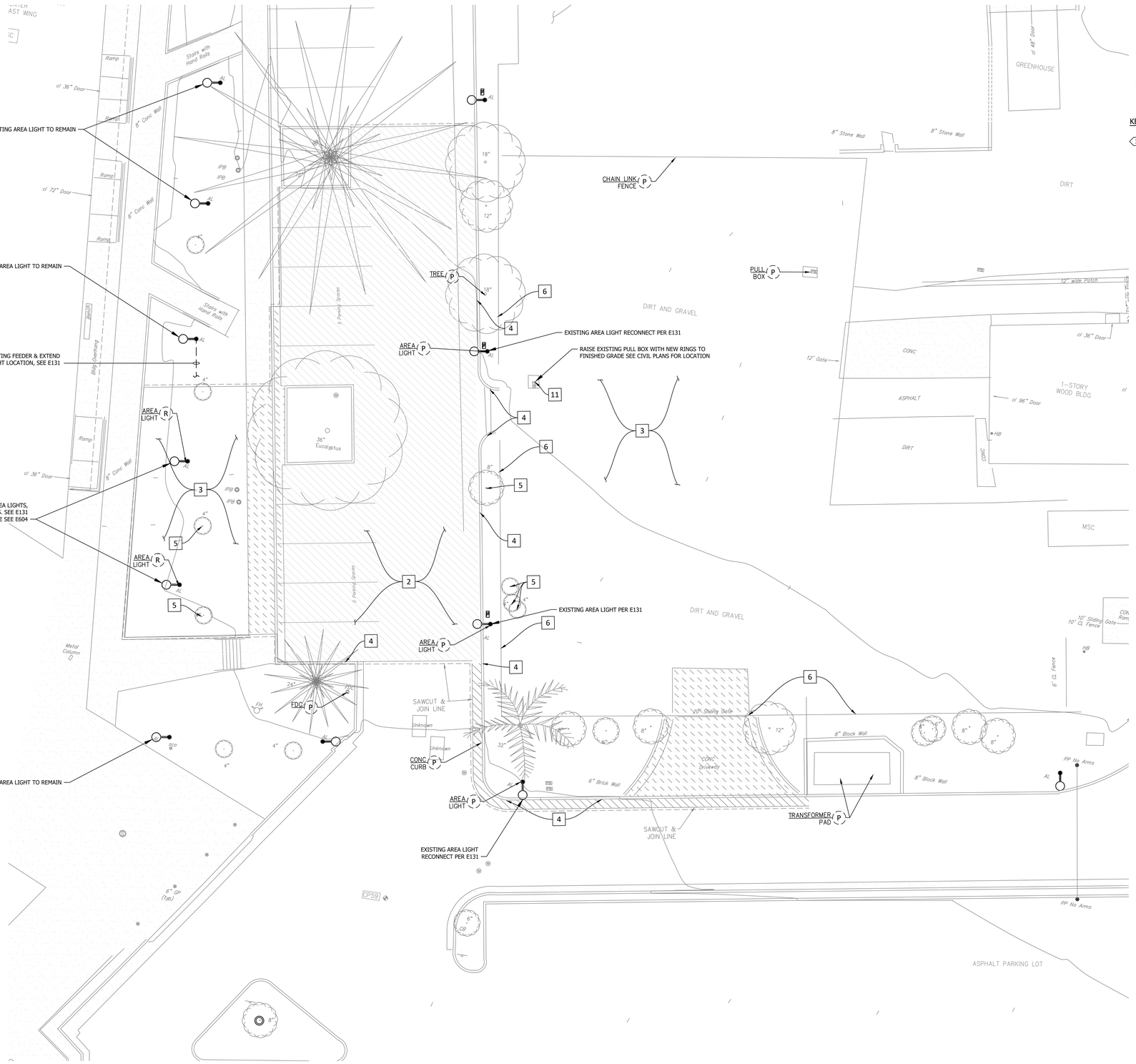

SCALE: 1"=10'
0 10 20

SITE LIGHTING PLAN EXISTING CONDITION

SCALE: 1"=10'-0"

1 - E130

N

SHEET NOTES:

1. SCOPE: PROVIDE AND PERFORM DEMOLITION, PREPARATORY AND MISCELLANEOUS WORK IN AREAS AS INDICATED AND SPECIFIED, COMPLETE.
2. DEMOLITION AND REMOVAL OF EXISTING ELECTRICAL CONDUIT, WIRING AND EQUIPMENT REQUIRED TO COMPLETE THE PROJECT.
3. PREPARATION OF THE EXISTING BUILDING TO RECEIVE OR CONNECT THE NEW WORK.
4. MISCELLANEOUS DEMOLITION, CUTTING, ALTERATION, AND REPAIR WORK IN THE EXISTING BUILDING NECESSARY FOR THE COMPLETION OF THE ENTIRE PROJECT.
5. DISCONNECTING AND RECONNECTION OF ELECTRICAL EQUIPMENT AS REQUIRED BY THE CONSTRUCTION MODIFICATIONS.
6. EXISTING CONDITIONS: PRIOR TO BID MAKE A DETAILED SURVEY OF THE EXISTING CONDITIONS PERTAINING TO THE WORK. CHECK THE LOCATIONS OF ALL EXISTING STRUCTURES, EQUIPMENT AND WIRING (BRANCH CIRCUITING AND CONTROLS). CHECK FOR ANY HAZARDOUS MATERIALS WHICH MAY REQUIRE SPECIAL HANDLING.
7. SALVAGE AND DISPOSAL: ALL REMOVED MATERIAL OTHER THAN ITEMS TO BE REUSED SHALL BE RETURNED TO THE OWNER OR DISPOSED OF IN ACCORDANCE WITH INSTRUCTIONS FROM THE OWNER'S REPRESENTATIVE. DISPOSAL SHALL BE DONE IN ACCORDANCE WITH EPA AND GOVERNING BODY REQUIREMENTS AND REGULATIONS. CONTRACTOR SHALL PAY ALL FEES AND CHARGES FOR DISPOSAL.
8. SCHEDULE ALL WORK AND OUTAGES WITH TENANTS AND OWNERS WRITTEN APPROVAL.
9. CONTRACTOR SHALL LEAVE ALL CIRCUITS ENERGIZED TO DEVICES IN AREAS OUTSIDE OF DEMOLITION AREA EVEN IF FEEDERS ARE ROUTED THROUGH DEMOLITION AREA.

KEY NOTES:

1 EXISTING BUILDINGS/STRUCTURES.

DEMOLITION NOTES:

1. CONCRETE PAVEMENT
2. ASPHALT CONCRETE PAVEMENT
3. CLEAR AND GRUB
4. CONCRETE CURB
5. TREE
6. CHAINLINK FENCE AND POST FOOTING
7. CMU WALL AND FOOTING
8. CONCRETE CATH BASIN
9. CURB RAMP
10. CONCRETE CURB AND GUTTER
11. PULL BOX

A ADJUST TO GRADE
P PROTECT IN PLACE
R RELOCATE EXISTING ITEMS, CONTRACTOR SHALL COORDINATE WITH OAR

DIVISION OF THE STATE ARCHITECT

IDENTIFICATION STAMP
DIV. OF THE STATE ARCHITECT
APP: 03-124589 INC:
REVIEWED FOR
SS ☑ FLS ☑ ACS ☑
DATE: 04/15/2025

VENTURA COUNTY COMMUNITY COLLEGE DISTRICT

761 EAST DAILY DRIVE
CAMARILLO, CALIFORNIA 93010
TEL: (805) 652-5500

PROJECT TITLE AND SCHOOL LOCATION

VENTURA COMMUNITY COLLEGE STEM MODULAR BUILDING

VENTURA COMMUNITY COLLEGE
4667 TELEGRAPH RD.
VENTURA, CA 93003

COMMISSIONED ARCHITECT

AMADOR

amador whittle architects, inc.
28328 AGOURA RD, 203 | AGOURA HILLS CA. 91301 | 805-558-4334

CONSULTANT

LUCCI & ASSOCIATES INC.
CONSULTING ELECTRICAL ENGINEERS
3251 CORTE MALPASO, #511
CAMARILLO, CA 93012-8094
(805) 389-6520 FAX (805) 389-6519

LUCCI & ASSOCIATES, INC. reserve their commonlaw copyright and other property rights in these plans. These plans and drawings are not to be reproduced, changed, or copied in any form or manner whatsoever without first obtaining the expressed written permission and consent of LUCCI & ASSOC. INC nor are they to be assigned to any third party without obtaining said written permission and consent.

STAMPS/SEALS

REGISTERED PROFESSIONAL ENGINEER
KENNETH W. LUCCI
No. E 8340
Exp. 09/30/2026
ELECTRICAL
STATE OF CALIFORNIA

LICENSED ARCHITECT
WILLIAM JORGE AMADOR
C-20348
JANUARY 31, 2027
RENEWAL DATE
STATE OF CALIFORNIA

DSA V3 SUBMITTAL 03/21/2025

SHEET TITLE:

SITE LIGHTING PLAN
EXISTING CONDITION

PROJECT NO: 22-VCCCD-08	PROJECT ARCH: Designer
DRAWN: LK/DS/IT	CHECKED: KL

SHEET NUMBER:

E130

DATE: 12/20/24 SHEET: ___ OF ___

Copyright Lucci and Associates Consulting Electrical Engineers. Deviations from this drawing will not be made without their expressed written permission.

L.A.I.# 22-539 PAPER SIZE 42"x30"

DRAFTER: CM02 DRAWING FILENAME: 22-539E130 PATHNAME: G:\22\539\ELS\Sheets DATE: 20 December 2024 TIME: 3:32 pm

KEY NOTES:

1. EXISTING FEEDER TO BE PROTECTED.
2. INTERCEPT EXISTING FEEDER & PROVIDE TEMPORARY CONNECTION TO DOWNSTREAM POLE TO MAINTAIN CAMPUS LIGHTING (1 1/4" TO 6 #8 & 1 #10 GND).
3. EXISTING POLE LIGHT TO REMAIN (PROTECT IN PLACE).
4. REMOVE EXISTING FEEDER IN NEW WORK AND USE TEMPORARY 2 POWER TO OTHER POLE FIXTURES FED ON THIS CIRCUIT TO MAINTAIN SITE LIGHTING DURING CONSTRUCTION.
5. NEW 1.25"C - 6 #8 & 1 #10 GROUND, CONNECT POLE LIGHT TO SAME CIRCUITS AS PREVIOUSLY ASSIGNED FOR RELOCATED/REPLACED POLE LIGHT.
6. SEE E604 FOR POLE BASE DETAIL.
7. MODULAR BUILDING FIXTURES SHOWN ON MODULAR PLAN (E1.0); EM DENOTES EM FIXTURES.
8. NEW LOCATION FOR EXISTING POLE. CONTRACTOR TO PROVIDE NEW BASE & ANCHOR BOLTS, 6.
9. NEW LOCATION FOR POLE LIGHT (OBTAIN POLE LIGHT FROM V.C. ELECTRICAL SHOP VIA PREVIOUSLY INSTALLED POLE LIGHT NOW SPARE). CONTRACTOR TO PROVIDE NEW BASE & NEW ANCHOR BOLTS, 6.
10. NEW 1"C - 2 #8 & 1 #10 GND.

SHEET NOTES:

1. VERIFY LOCATION OF ALL BUILDINGS AND APPENDITURES ON ARCHITECTURAL AND CIVIL PLANS.
2. CONTRACTOR SHALL VERIFY LOCATION AND REQUIREMENTS OF ALL ELECTRICAL DEVICES PRIOR TO BID. ROUGH-IN AND INSTALLATION.
3. CONTRACTOR SHALL FIELD VERIFY LOCATION OF ALL UNDERGROUND UTILITIES PRIOR TO ANY TRENCHING. CONTRACTOR SHALL PROTECT ALL EXISTING/REMAINING UNDERGROUND UTILITY SYSTEMS IN PLACE. CONTRACTOR SHALL REPAIR ANY UTILITY SYSTEM DAMAGED DURING CONSTRUCTION.
4. ALL CONDUIT 90° CONDUIT BENDS AND RISERS SHALL BE PVC SCHEDULE 80
5. MINIMUM CONDUIT BURIAL DEPTH IS 24".
6. CONTRACTOR TO PROVIDE GROUND CONDUCTORS IN ALL CONDUITS.
7. 1" CONDUIT MINIMUM UNDERGROUND.
8. COORDINATE WORK WITH OTHER TRADES. OBTAIN ALL DRAWINGS THAT WILL REQUIRE COORDINATION AND PROVIDE ALL ELECTRICAL CONNECTIONS, DEVICES, AND WIRING REQUIRED WHETHER SHOWN ON ELECTRICAL DRAWINGS OR NOT.
9. CONTRACTOR SHALL FURNISH AND INSTALL PULL BOXES AS REQUIRED TO INSTALL CONDUCTORS PER CONDUCTOR MANUFACTURERS RECOMMENDATIONS, PER THE NATIONAL ELECTRICAL CODE AND PER LOCAL AUTHORITIES HAVING JURISDICTION.
10. ALL NEW CONDUITS SHALL HAVE WARNING / TRACER TAPE APPROXIMATELY 6" ABOVE CONDUITS.

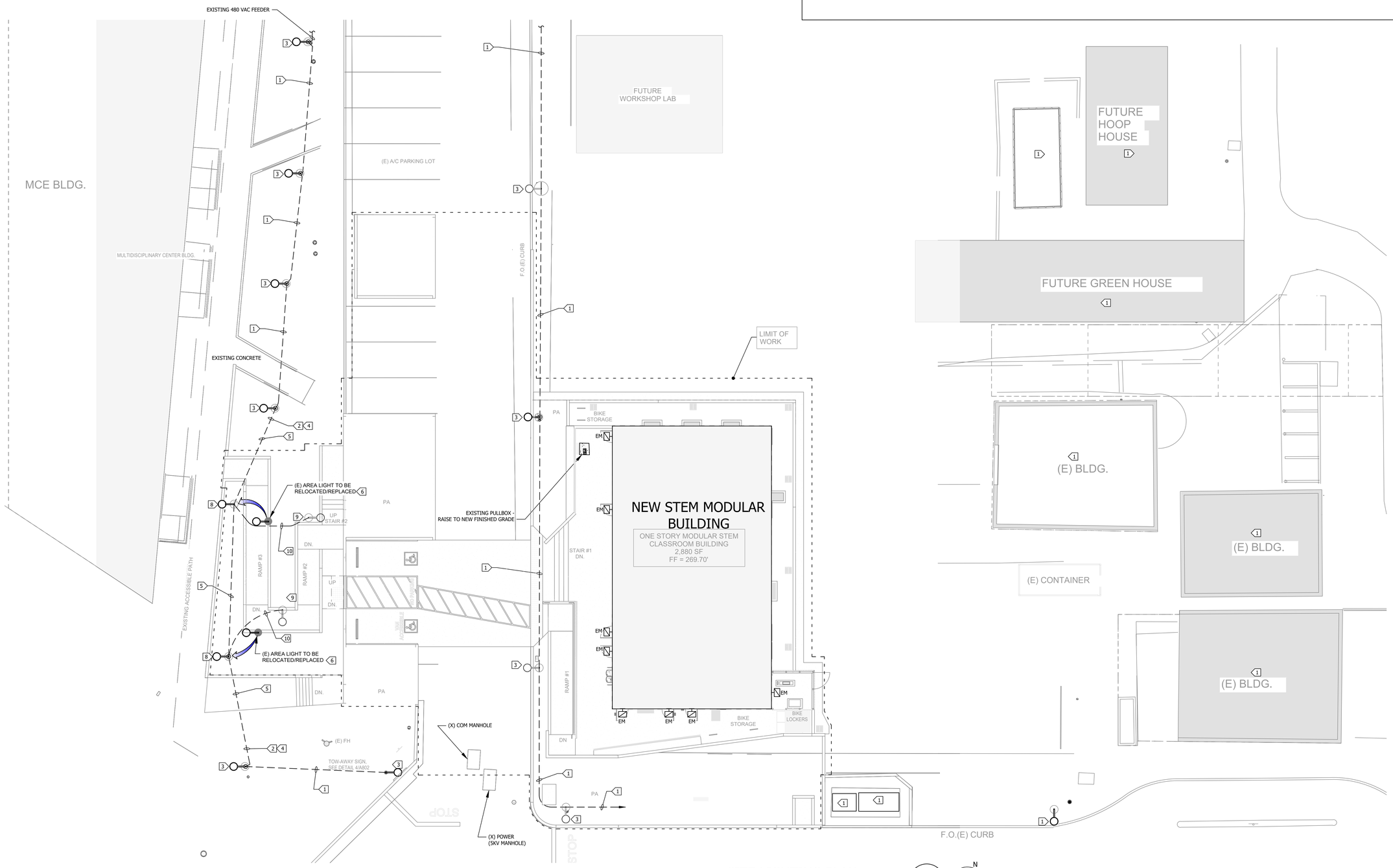

SCALE: 1"=10'
0 10 20

SITE LIGHTING PLAN
SCALE: 1"=10'-0"

1 - E131

Copyright Lucci and Associates Consulting Electrical Engineers. Deviations from this drawing will not be made without their expressed written permission.

L.A.I.# 22-539 PAPER SIZE 42"x30"

DIVISION OF THE STATE ARCHITECT

IDENTIFICATION STAMP
DIV. OF THE STATE ARCHITECT
APP: 03-124589 INC:
REVIEWED FOR
SS ☑ FLS ☑ ACS ☑
DATE: 04/15/2025

VENTURA COUNTY COMMUNITY COLLEGE DISTRICT
761 EAST DAILY DRIVE
CAMARILLO, CALIFORNIA 93010
TEL: (805) 652-5500

PROJECT TITLE AND SCHOOL LOCATION

VENTURA COMMUNITY COLLEGE STEM MODULAR BUILDING
VENTURA COMMUNITY COLLEGE
4667 TELEGRAPH RD.
VENTURA, CA 93003

COMMISSIONED ARCHITECT

AMADOR
amador whittle architects, inc.
28328 AGOURA RD, 203 | AGOURA HILLS CA. 91301 | 805-558-4334

CONSULTANT

LUCCI & ASSOCIATES INC.
CONSULTING ELECTRICAL ENGINEERS
3251 CORTE MALPASO, #611
CAMARILLO, CA 93012-8094
(805) 389-6520 FAX (805) 389-6519

LUCCI & ASSOCIATES, INC. reserve their commonlaw copyright and other property rights in these plans. These plans and drawings are not to be reproduced, changed, or copied in any form or manner whatsoever without first obtaining the expressed written permission and consent of LUCCI & ASSOC. INC nor are they to be assigned to any third party without obtaining said written permission and consent.

STAMPS/SEALS

REGISTERED PROFESSIONAL ENGINEER
KENNETH W. LUCCI
No. E 8340
Exp. 09/30/2026
ELECTRICAL
STATE OF CALIFORNIA

LICENSED ARCHITECT
WILLIAM JORGE AMADOR
C-20348
JANUARY 31, 2027
RENEWAL DATE
STATE OF CALIFORNIA

DSA V3 SUBMITTAL 03/21/2025

SHEET TITLE:

SITE LIGHTING PLAN
NEW WORK

PROJECT NO.: 22-VCCCD-08	PROJECT ARCH: Designer
DRAWN: LK/DS/IT	CHECKED: KL
SHEET NUMBER: E131	
DATE: 12/20/24	SHEET: ___ OF ___

DRAFTER: CM02 DRAWING FILENAME: 22-539E131 PATHNAME: D:\ACADSUP_TEMP\AcPublish_17680 DATE: 20 December 2024 TIME: 3:32 pm

LIGHTING SCHEDULE

Symbol	Label	Image	Qty	Manufacturer	Catalog Number	Description	Number Lamps	Lamp Output	LLF	Input Power	Distribution	Notes
	A		0	Lithonia Lighting	ARC1 LED P3 40K(EM LIGHTING MODE)	ARC1 LED WITH P3 - PERFORMANCE PACKAGE, 4000K	1	3021	0.25	24.5247	TYPE III, VERY SHORT, BUG RATING: B1 - U0 - G1	
	B		0	Lithonia Lighting	MRP LED 42C 1000 40K SR3 MVOLT(EM FIXTURE--POWER VIA INVERTER	MRP POST TOP LIGHT 42 LEDs 1000 mA DRIVE CURRENT 40K COLOR TEMP TYPE 3 DISTRIBUTION	1	9848	0.9	151	TYPE IV, SHORT, BUG RATING: B2 - U2 - G2	
	D		6	Lithonia Lighting	EHL22RT 63LED 525MA 4K GCF MVOLT R3 QSM ANDB	Eurotique EHL22RT 63LED 525MA 4K GCF MVOLT R3 QSM ANDB LED Fixture Photometric Audit John Wathen Robert Bess 2/28/18	1	12789	0.85	104.3	TYPE III, SHORT, BUG RATING: B2 - U2 - G2	

STATISTICS

Description	Symbol	Max	Min	Avg/Min	Avg	Max/Min	UG
WALKWAY	+	8.0 fc	1.3 fc	3.4:1	4.4 fc	6.2:1	3.1

SEE E131 FOR NEW/RELOCATED LIGHTING FIXTURES

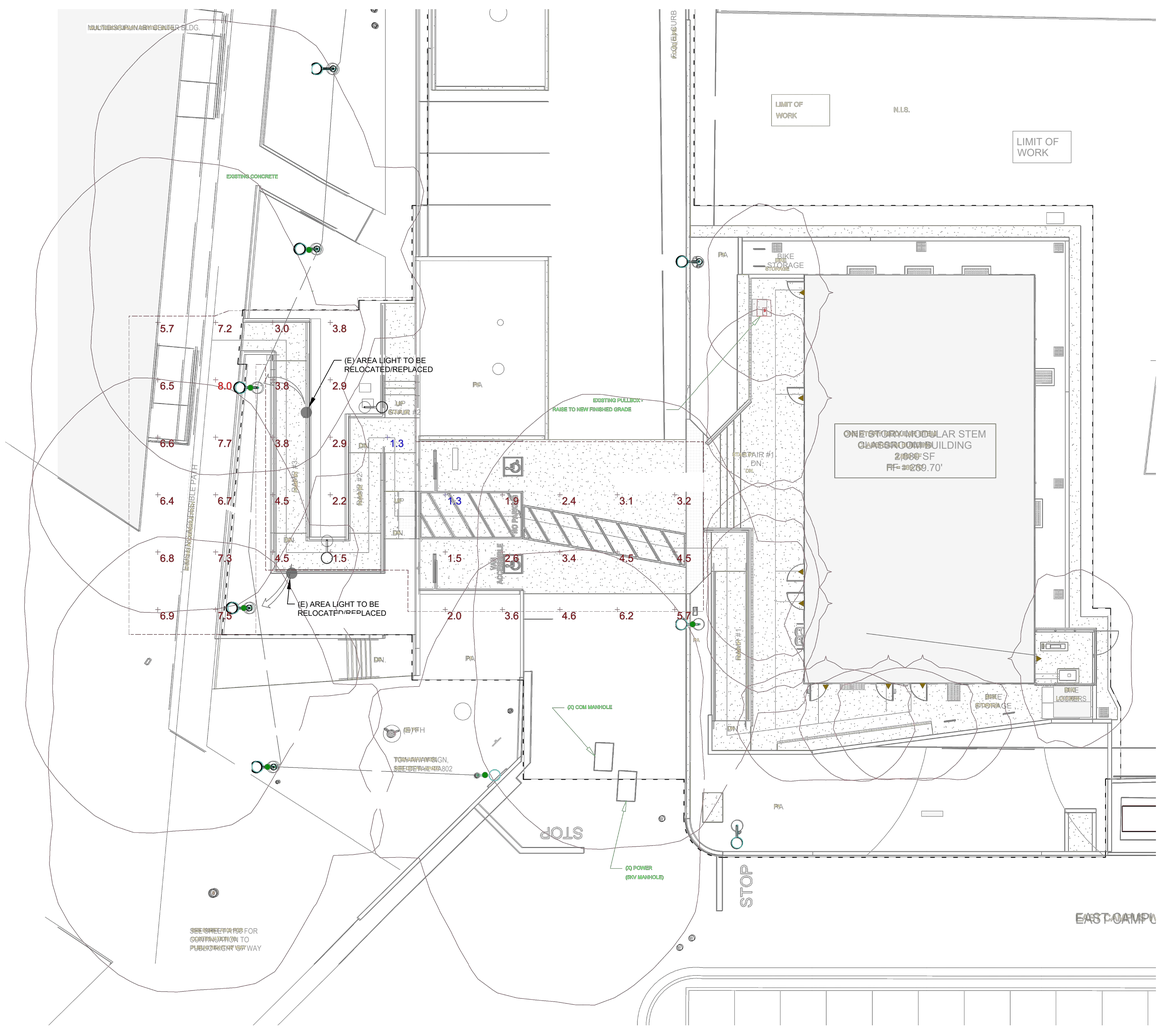

SCALE: 1/8"=1'-0"

0 4' 8' 16'

SITE PHOTOMETRIC PLAN 2

SCALE: 1/8"=1'-0"

- E132

N

LIGHTING SCHEDULE

Symbol	Label	Image	Qty	Manufacturer	Catalog Number	Description	Number Lamps	Lamp Output	LLF	Input Power	Distribution	Notes
	C		8	Lithonia Lighting	WDGE2 LED P3 40K 70CRI T4M-(EM LIGHTING MODE)	WDGE2 LED WITH P3 - PERFORMANCE PACKAGE, 4000K, 70CRI, TYPE 4 MEDIUM OPTIC	1	3552	0.25	32.1375	TYPE IV, MEDIUM, BUG RATING: B1 - U0 - G1	

SEE E131 FOR NEW/RELOCATED LIGHTING FIXTURES

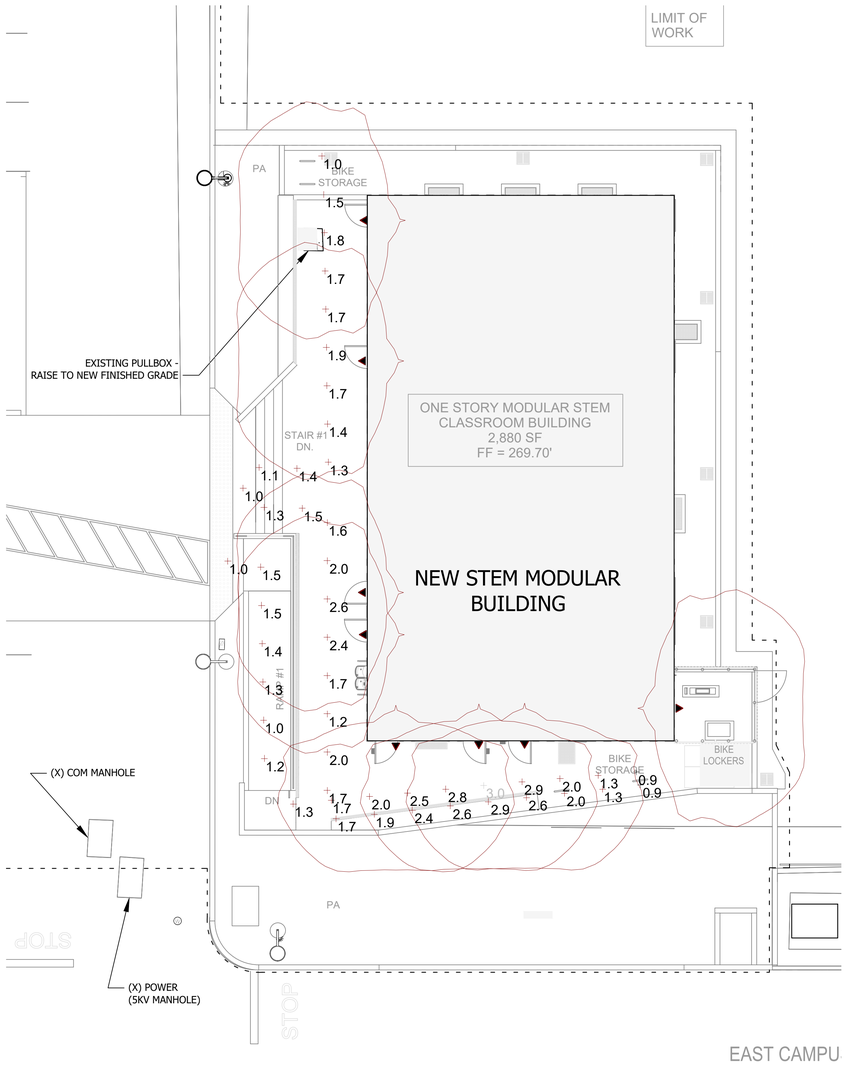

SCALE: 1/8"=1'-0"

0 4' 8' 16'

STEM MODULAR EM PHOTOMETRIC PLAN 1

SCALE: 1/8"=1'-0"

- E132

N

DIVISION OF THE STATE ARCHITECT

IDENTIFICATION STAMP
DIV. OF THE STATE ARCHITECT
APP: 03-124589 INC:
REVIEWED FOR
SS ☑ FLS ☑ ACS ☑
DATE: 04/15/2025

VENTURA COUNTY COMMUNITY COLLEGE DISTRICT
MOORPARK OXNARD VENTURA

VENTURA COUNTY COMMUNITY COLLEGE DISTRICT

761 EAST DAILY DRIVE
CAMARILLO, CALIFORNIA 93010
TEL: (805) 652-5500

PROJECT TITLE AND SCHOOL LOCATION

VENTURA COMMUNITY COLLEGE STEM MODULAR BUILDING

VENTURA COMMUNITY COLLEGE
4667 TELEGRAPH RD.
VENTURA, CA 93003

COMMISSIONED ARCHITECT

AMADOR

amador whittle architects, inc.
28328 AGOURA RD, 203 | AGOURA HILLS CA, 91301 | 805-558-4334

CONSULTANT

LUCCI & ASSOCIATES INC.
CONSULTING ELECTRICAL ENGINEERS
3251 CORTE MALPASO, #511
CAMARILLO, CA 93012-8094
(805) 389-6520 FAX (805) 389-6519

LUCCI & ASSOCIATES, INC. reserve their commonlaw copyright and other property rights in these plans. These plans and drawings are not to be reproduced, changed, or copied in any form or manner whatsoever without first obtaining the expressed written permission and consent of LUCCI & ASSOC. INC nor are they to be assigned to any third party without obtaining said written permission and consent.

STAMPS/SEALS

REGISTERED PROFESSIONAL ENGINEER
KENNETH W. KLEIN
NO. E 8340
Exp. 09/30/2026
ELECTRICAL
STATE OF CALIFORNIA

LICENSED ARCHITECT
WILLIAM JORGE AMADOR
C-20348
JANUARY 31, 2027
RENEWAL DATE
STATE OF CALIFORNIA

DSA V3 SUBMITTAL 03/21/2025

SHEET TITLE:

STEM MODULAR EM PHOTOMETRIC PLAN & SITE PHOTOMETRIC PLAN

PROJECT NO.: 22-VCCCD-08	PROJECT ARCH: Designer
DRAWN: LK/DS/IT	CHECKED: KL

SHEET NUMBER:

E132

DATE: 12/20/24	SHEET: ___ OF ___

Copyright Lucci and Associates Consulting Electrical Engineers. Deviations from this drawing will not be made without their expressed written permission.

L.A.I.# 22-539 PAPER SIZE 42"x30"

DRAFTER: CM02 DRAWING FILENAME: 22-539E132 PATHNAME: G:\22\539\EL\Sheets DATE: 20 December 2024 TIME: 3:32 pm

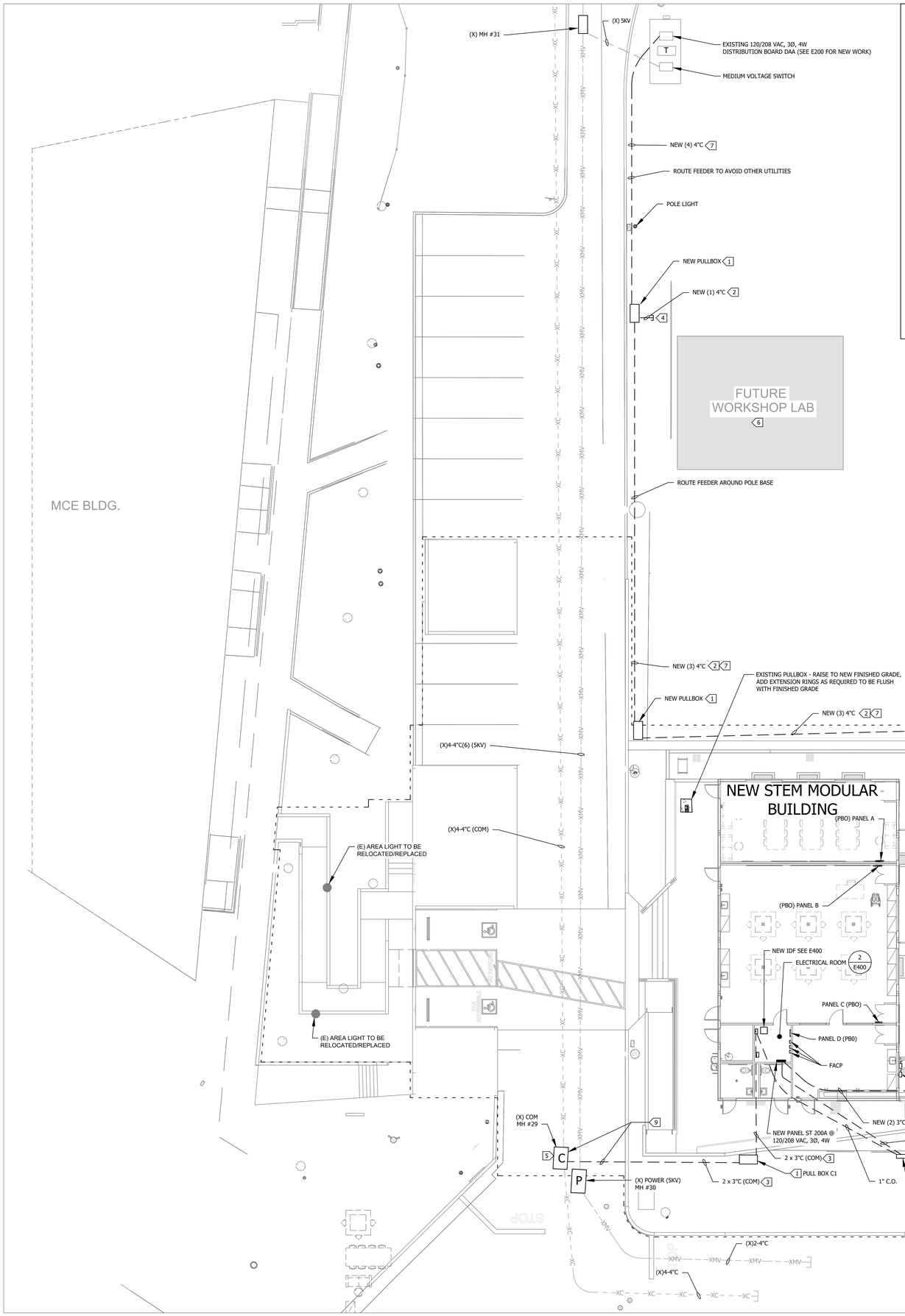

KEY NOTES:

1. NEW PULLBOX PER E600.
2. PER E601 & E200 (SCHEDULE 40 PVC WITH SLURRY COVER & MINIMUM 24" FROM TOP OF CONDUIT TO FINISHED GRADE.
3. NEW COM CONDUIT SEE E601 DETAIL 4
4. STUB OUT 5'-0" & CAP. (24" BELOW FINISHED GRADE).
5. CONTRACTOR TO INTERCEPT MANHOLE & INSTALL (2) NEW 4"C IN SOUTH EAST CORNER, THEN EXTEND TO NEW BUILDING IDF RACK. CONTRACTOR TO REPAIR CONCRETE & ASPHALT TO ORIGINAL CONDITION.
6. EXISTING BUILDING / STRUCTURE / EQUIPMENT TO REMAIN.
7. NEW FEEDER & CONDUITS PER E200/E601.
8. LANDSCAPE CONTROLLER, SEE LANDSCAPE PLANS.
9. CONTRACTOR TO PROVIDE (2) 3" SCHEDULE 80PVC CONDUITS FROM EXISTING COM MANHOLE 29 (CONTRACTOR TO SAW CUT ASPHALT & CORE INTO EXISTING MAN HOLE 29) TRENCH TO PULL BOX C1 & TO ELECTRICAL ROOM IDF OPENING & EXTEND UP WALL 36". CONTRACTOR TO PROVIDE METERED PULL STRING IN EACH CONDUIT. CONTRACTOR TO REPLACE ASPHALT WITH NEW 6" ASPHALT OVER SAND SLURRY (1 SACK MIX) FOR ENTIRE TRENCH DEPTH, SEE E601 FOR TYPICAL TRENCH DETAIL.
10. 1"C - 2#12 & 1#12 GND.

CONTRACTOR TO RETAIN U.G. UTILITY CONSULTANT TO LOCATE ALL U.G. UTILITIES & ROUTE FEEDERS/CONDUITS TO AVOID U.G. OBSTRUCTION & CONFLICTS.

SHEET NOTES:

1. VERIFY LOCATION OF ALL BUILDINGS AND APPENDITURES ON ARCHITECTURAL AND CIVIL PLANS.
2. CONTRACTOR SHALL VERIFY LOCATION AND REQUIREMENTS OF ALL ELECTRICAL DEVICES PRIOR TO BID. ROUGH-IN AND INSTALLATION.
3. CONTRACTOR SHALL FIELD VERIFY LOCATION OF ALL UNDERGROUND UTILITIES PRIOR TO ANY TRENCHING. CONTRACTOR SHALL PROTECT ALL EXISTING/REMAINING UNDERGROUND UTILITY SYSTEMS IN PLACE. CONTRACTOR SHALL REPAIR ANY UTILITY SYSTEM DAMAGED DURING CONSTRUCTION.
4. ALL CONDUIT 90° CONDUIT BENDS AND RISERS SHALL BE PVC SCHEDULE 80
5. MINIMUM CONDUIT BURIAL DEPTH IS 24".
6. CONTRACTOR TO PROVIDE GROUND CONDUCTORS IN ALL CONDUITS.
7. 1" CONDUIT MINIMUM UNDERGROUND.
8. COORDINATE WORK WITH OTHER TRADES. OBTAIN ALL DRAWINGS THAT WILL REQUIRE COORDINATION AND PROVIDE ALL ELECTRICAL CONNECTIONS, DEVICES, AND WIRING REQUIRED WHETHER SHOWN ON ELECTRICAL DRAWINGS OR NOT.
9. CONTRACTOR SHALL FURNISH AND INSTALL PULL BOXES AS REQUIRED TO INSTALL CONDUCTORS PER CONDUCTOR MANUFACTURERS RECOMMENDATIONS, PER THE NATIONAL ELECTRICAL CODE AND PER LOCAL AUTHORITIES HAVING JURISDICTION.
10. ALL NEW CONDUITS SHALL HAVE WARNING / TRACER TAPE APPROXIMATELY 6" ABOVE CONDUITS.

CONTRACTOR SHALL ACCURATELY & EXACTLY LOCATE (X, Y, Z AXIS) ON AS-BUILT PLANS ALL UNDERGROUND CONDUITS, INCLUDING CONDUITS STUBBED OUT FOR FUTURE USE SHALL BE IDENTIFIED AS TO THEIR EXACT LOCATION.

SITE POWER & COM PLAN 1 - E140 -
SCALE: 1"=10'-0"

Copyright Lucci and Associates Consulting Electrical Engineers. Deviations from this drawing will not be made without their expressed written permission.

L.A.I.# 22-539 PAPER SIZE 42"x30"

DIVISION OF THE STATE ARCHITECT

IDENTIFICATION STAMP
DIV. OF THE STATE ARCHITECT
APP: 03-124589 INC:
REVIEWED FOR
SS ☑ FLS ☑ ACS ☑
DATE: 04/15/2025

VENTURA COUNTY COMMUNITY COLLEGE DISTRICT
MOORPARK OXNARD VENTURA

VENTURA COUNTY COMMUNITY COLLEGE DISTRICT

761 EAST DAILY DRIVE
CAMARILLO, CALIFORNIA 93010
TEL: (805) 652-5500

PROJECT TITLE AND SCHOOL LOCATION

VENTURA COMMUNITY COLLEGE STEM MODULAR BUILDING

VENTURA COMMUNITY COLLEGE
4667 TELEGRAPH RD.
VENTURA, CA 93003

COMMISSIONED ARCHITECT

AMADOR

amador whittle architects, inc.
28328 AGOURA RD, 203 | AGOURA HILLS CA. 91301 | 805-558-4334

CONSULTANT

LUCCI & ASSOCIATES INC.
CONSULTING ELECTRICAL ENGINEERS
3251 CORTE MALPASO, #511
CAMARILLO, CA 93012-8094
(805) 389-6520 FAX (805) 389-6519

LUCCI & ASSOCIATES, INC. reserve their commonlaw copyright and other property rights in these plans. These plans and drawings are not to be reproduced, changed, or copied in any form or manner whatsoever without first obtaining the expressed written permission and consent of LUCCI & ASSOC. INC nor are they to be assigned to any third party without obtaining said written permission and consent.

STAMPS/SEALS

REGISTERED PROFESSIONAL ENGINEER
KENNETH W. LUCCI
NO. E 8340
Exp. 09/30/2026
ELECTRICAL
STATE OF CALIFORNIA

LICENSED ARCHITECT
WILLIAM JORGE AMADOR
C-20348
JANUARY 31, 2027
RENEWAL DATE
STATE OF CALIFORNIA

DSA V3 SUBMITTAL 03/21/2025

SHEET TITLE:

SITE POWER & COM PLAN

PROJECT NO: 22-VCCCD-08	PROJECT ARCH: Designer
DRAWN: LK/DS/IT	CHECKED: KL

SHEET NUMBER:

E140

DATE: 12/20/24 SHEET: ___ OF ___

DRAFTER: CM02 DRAWING FILENAME: 22-539E140 PATHNAME: G:\22\539\ELI\Sheets DATE: 20 December 2024 TIME: 3:32 pm

PROVIDED BY OTHERS

PANEL NUMBER A — VOLTAGE 120/240 — PHASE 3 — WIRE 4
SOURCE PANEL ST — A.I.C. 10,000
PANEL LOCATION IN MODULAR — BUS AMPERE RATING 100

■ NEMA 1 ■ COPPER BUSS
■ MAIN LUGS ONLY
■ FLUSH MOUNTING

LCL	MISC	RCPT	LITE	CIRCUIT DESCRIPTION	LOAD(VA) A	LOAD(VA) B	LOAD(VA) C	BRKR POLE	BRKR AMP	CKT	PHASE A B C	CKT	BRKR AMP	BRKR POLE	LOAD(VA) A	LOAD(VA) B	LOAD(VA) C	CIRCUIT DESCRIPTION	MISC	RCPT	LITE	LCL
				.	.					1		2			.			.				
				.		.				3		4				.		.				
				.			.			5		6					.	.				
				.	.					7		8			.			.				
				.		.				9		10				.		.				
				.			.			11		12					.	.				
				.	.					13		14			.			.				
				.		.				15		16				.		.				
				.			.			17		18					.	.				
				.	.					19		20			.			.				
				.		.				21		22				.		.				
				.			.			23		24					.	.				
				.	.					25		26			.			.				
				.		.				27		28				.		.				
				.			.			29		30					.	.				
				TOTALS	.	.	.								.	.	.	TOTALS				

L.C.L. VOLT AMPS: . PHASE A . PHASE B . PHASE C .
TOTAL VOLT AMPS: 16200 PHASE A . PHASE B . PHASE C .
TOTAL AMPS: 45 PHASE A . PHASE B . PHASE C .

PROVIDED BY OTHERS

PANEL NUMBER B — VOLTAGE 120/240 — PHASE 3 — WIRE 4
SOURCE PANEL ST — A.I.C. 10,000
PANEL LOCATION IN MODULAR — BUS AMPERE RATING 100

■ NEMA 1 ■ COPPER BUSS
■ MAIN LUGS ONLY
■ FLUSH MOUNTING

LCL	MISC	RCPT	LITE	CIRCUIT DESCRIPTION	LOAD(VA) A	LOAD(VA) B	LOAD(VA) C	BRKR POLE	BRKR AMP	CKT	PHASE A B C	CKT	BRKR AMP	BRKR POLE	LOAD(VA) A	LOAD(VA) B	LOAD(VA) C	CIRCUIT DESCRIPTION	MISC	RCPT	LITE	LCL
				.	.					1		2			.			.				
				.		.				3		4				.		.				
				.			.			5		6					.	.				
				.	.					7		8			.			.				
				.		.				9		10				.		.				
				.			.			11		12					.	.				
				.	.					13		14			.			.				
				.		.				15		16				.		.				
				.			.			17		18					.	.				
				.	.					19		20			.			.				
				.		.				21		22				.		.				
				.			.			23		24					.	.				
				.	.					25		26			.			.				
				.		.				27		28				.		.				
				.			.			29		30					.	.				
				TOTALS	.	.	.								.	.	.	TOTALS				

L.C.L. VOLT AMPS: . PHASE A . PHASE B . PHASE C .
TOTAL VOLT AMPS: 14400 PHASE A . PHASE B . PHASE C .
TOTAL AMPS: 40 PHASE A . PHASE B . PHASE C .

PROVIDED BY OTHERS

PANEL NUMBER C — VOLTAGE 120/240 — PHASE 3 — WIRE 4
SOURCE PANEL ST — A.I.C. 10,000
PANEL LOCATION IN MODULAR — BUS AMPERE RATING 125

■ NEMA 1 ■ COPPER BUSS
■ MAIN LUGS ONLY
■ FLUSH MOUNTING

LCL	MISC	RCPT	LITE	CIRCUIT DESCRIPTION	LOAD(VA) A	LOAD(VA) B	LOAD(VA) C	BRKR POLE	BRKR AMP	CKT	PHASE A B C	CKT	BRKR AMP	BRKR POLE	LOAD(VA) A	LOAD(VA) B	LOAD(VA) C	CIRCUIT DESCRIPTION	MISC	RCPT	LITE	LCL
				.	.					1		2			.			.				
				.		.				3		4				.		.				
				.			.			5		6					.	.				
				.	.					7		8			.			.				
				.		.				9		10				.		.				
				.			.			11		12					.	.				
				.	.					13		14			.			.				
				.		.				15		16				.		.				
				.			.			17		18					.	.				
				.	.					19		20			.			.				
				.		.				21		22				.		.				
				.			.			23		24					.	.				
				.	.					25		26			.			.				
				.		.				27		28				.		.				
				.			.			29		30					.	.				
				TOTALS	.	.	.								.	.	.	TOTALS				

L.C.L. VOLT AMPS: . PHASE A . PHASE B . PHASE C .
TOTAL VOLT AMPS: 29000 PHASE A . PHASE B . PHASE C .
TOTAL AMPS: 80 PHASE A . PHASE B . PHASE C .

PROVIDED BY OTHERS

PANEL NUMBER D — VOLTAGE 120/240 — PHASE 3 — WIRE 4
SOURCE PANEL ST — A.I.C. 10,000
PANEL LOCATION IN MODULAR — BUS AMPERE RATING 125

■ NEMA 1 ■ COPPER BUSS
■ MAIN LUGS ONLY
■ FLUSH MOUNTING

LCL	MISC	RCPT	LITE	CIRCUIT DESCRIPTION	LOAD(VA) A	LOAD(VA) B	LOAD(VA) C	BRKR POLE	BRKR AMP	CKT	PHASE A B C	CKT	BRKR AMP	BRKR POLE	LOAD(VA) A	LOAD(VA) B	LOAD(VA) C	CIRCUIT DESCRIPTION	MISC	RCPT	LITE	LCL
				.	.					1		2			.			.				
				.		.				3		4				.		.				
				.			.			5		6					.	.				
				.	.					7		8			.			.				
				.		.				9		10				.		.				
				.			.			11		12					.	.				
				.	.					13		14			.			.				
				.		.				15		16				.		.				
				.			.			17		18					.	.				
				.	.					19		20			.			.				
				.		.				21		22				.		.				
				.			.			23		24					.	.				
				.	.					25		26			.			.				
				.		.				27		28				.		.				
				.			.			29		30					.	.				
				TOTALS	.	.	.								.	.	.	TOTALS				

L.C.L. VOLT AMPS: . PHASE A . PHASE B . PHASE C .
TOTAL VOLT AMPS: 29000 PHASE A . PHASE B . PHASE C .
TOTAL AMPS: 80 PHASE A . PHASE B . PHASE C .

NEW PANEL

PANEL NUMBER ST — VOLTAGE 120/208 — PHASE 3 — WIRE 4
SOURCE DAA — A.I.C. 10,000
PANEL LOCATION ELECTRICAL ROOM — BUS AMPERE RATING 225

■ NEMA 1 ■ COPPER BUSS
■ MAIN CIRCUIT BREAKER 225 — PROVIDE WITH LUGS FOR 2 #2/0 PER PHASE
■ SURFACE MOUNTING

LCL	MISC	RCPT	LITE	CIRCUIT DESCRIPTION	LOAD(VA) A	LOAD(VA) B	LOAD(VA) C	BRKR POLE	BRKR AMP	CKT	PHASE A B C	CKT	BRKR AMP	BRKR POLE	LOAD(VA) A	LOAD(VA) B	LOAD(VA) C	CIRCUIT DESCRIPTION	MISC	RCPT	LITE	LCL
				PANEL A	5400				100	1		2	125		5000			PANEL C				
				PANEL A		5400				3		4				5000		PANEL C				
				PANEL A			5400	3		5		6		3			5000	PANEL C				
				PANEL B	4800				100	7		8	125		10000			PANEL D				
				PANEL B		4800				9		10				10000		PANEL D				
				PANEL B			4800	3		11		12		3			10000	PANEL D				
				RECEPTACLES	180			1	20	13		14	20		1500			INVERTER				
				RECEPTACLES		180		1	20	15		16		2		1500		INVERTER				
				RECEPTACLES			180	1	20	17		18	20	1			180	IDF				
				RECEPTACLES	180			1	20	19		20	20	1	180			IDF				
				EXHAUST FAN		500			20	21		22	20	1		180		IDF				
				EXHAUST FAN			500	2		23		24	30				180	IDF				
				SPARE	.			1	20	25		26		2	180			IDF				
				SPARE		.		1	20	27		28	40			3000		WATER HEATER				
				SPARE			.	1	20	29		30		2			3000	WATER HEATER				
				SPARE	.			1	20	31		32	20	1	.			SPARE				
				SPARE		.		1	20	33		34	20	1		.		SPARE				
				SPARE			.	1	20	35		36	20	1			.	SPARE				
				SPARE	.			1	20	37		38	20	1	.			SPARE				
				SPARE		.		1	20	39		40	20	1		100		LANDSCAPE CONTROLLER				
				SPARE			.	1	20	41		42	20	1			500	FIRE ALARM				
				TOTALS	10560	10880	10880								16860	19780	18860	TOTALS				

L.C.L. VOLT AMPS: . PHASE A . PHASE B . PHASE C .
TOTAL VOLT AMPS: 87820 PHASE A 27420 PHASE B 30660 PHASE C 29740
TOTAL AMPS: 244 PHASE A 229 PHASE B 255 PHASE C 248

RED, LOCK ON DEDICATED CIRCUIT

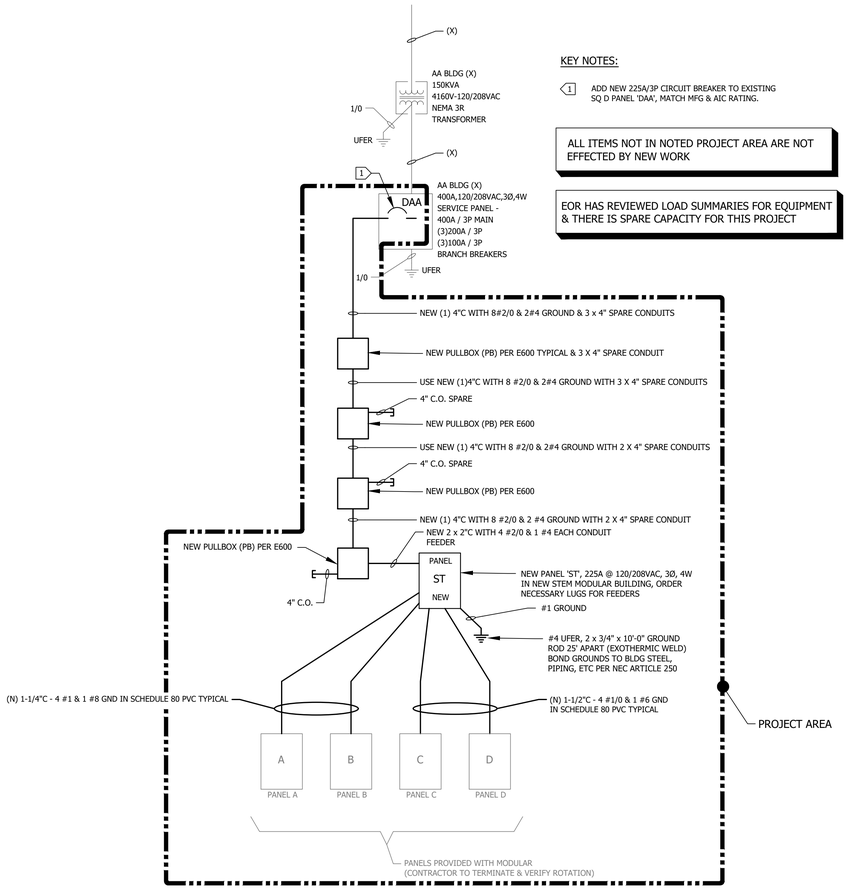

KEY NOTES:

1. ADD NEW 225A/3P CIRCUIT BREAKER TO EXISTING SQ D PANEL 'DAA', MATCH MFG & AIC RATING.

ALL ITEMS NOT IN NOTED PROJECT AREA ARE NOT EFFECTED BY NEW WORK

EOR HAS REVIEWED LOAD SUMMARIES FOR EQUIPMENT & THERE IS SPARE CAPACITY FOR THIS PROJECT

ELECTRICAL SINGLE LINE 1
SCALE: NONE - E200 -

DIVISION OF THE STATE ARCHITECT

IDENTIFICATION STAMP
DIV. OF THE STATE ARCHITECT
APP: 03-124589 INC:
REVIEWED FOR
SS ☑ FLS ☑ ACS ☑
DATE: 04/15/2025

VENTURA COUNTY COMMUNITY COLLEGE DISTRICT
761 EAST DAILY DRIVE
CAMARILLO, CALIFORNIA 93010
TEL: (805) 652-5500

PROJECT TITLE AND SCHOOL LOCATION

VENTURA COMMUNITY COLLEGE STEM MODULAR BUILDING
VENTURA COMMUNITY COLLEGE
4667 TELEGRAPH RD.
VENTURA, CA 93003

COMMISSIONED ARCHITECT

AMADOR
amador wildfile architects, inc.
28328 AGOURA RD. 203 | AGOURA HILLS CA. 91301 | 805-558-4334

CONSULTANT

LUCCI & ASSOCIATES INC.
CONSULTING ELECTRICAL ENGINEERS
3251 CORTE MALPASO, #611
CAMARILLO, CA 93012-8094
(805) 389-6520 FAX (805) 389-6519

LUCCI & ASSOCIATES, INC. reserve their commonlaw copyright and other property rights in these plans. These plans and drawings are not to be reproduced, changed, or copied in any form or manner whatsoever without first obtaining the expressed written permission and consent of LUCCI & ASSOC. INC nor are they to be assigned to any third party without obtaining said written permission and consent.

STAMPS/SEALS

REGISTERED PROFESSIONAL ENGINEER — MENELIK W. LUCCI — No. E 8340 — Exp. 09/30/2026 — ELECTRICAL — STATE OF CALIFORNIA

LICENSED ARCHITECT — WILLIAM JORGE AMADOR — C-20348 — JANUARY 31, 2027 — RENEWAL DATE — STATE OF CALIFORNIA

DSA V3 SUBMITTAL 03/21/2025

SHEET TITLE:

ELECTRICAL SINGLE LINE DIAGRAM - EXISTING WITH NEW WORK

PROJECT NO.: 22-VCCCD-08	PROJECT ARCH: Designer
DRAWN: LK/DS/IT	CHECKED: KL

SHEET NUMBER:

E200

DATE: 12/20/24 SHEET: ___ OF ___

Copyright Lucci and Associates Consulting Electrical Engineers. Deviations from this drawing will not be made without their expressed written permission.

L.A.I.# 22-539 PAPER SIZE 42"x30"

DATE: 20 December 2024 TIME: 3:32 pm
PATHNAME: G:\22\539\ELI\Sheets
DRAWING FILENAME: 22-539E200
DRAFTER: CM02

Drafter:CM02 Page Size:22x34
Date:Fri, Dec 20, 2024 Time:3:29 PM
Xref(s):TB-01, TB-02, TB-03
Block(s):TB-01,TB-02,TB-03,TB-04,TB-05,TB-06,TB-07,TB-08,TB-09,TB-10,TB-11,TB-12,TB-13,TB-14,TB-15,TB-16,TB-17,TB-18,TB-19,TB-20,TB-21,TB-22,TB-23,TB-24,TB-25,TB-26,TB-27,TB-28,TB-29,TB-30,TB-31,TB-32,TB-33,TB-34,TB-35,TB-36,TB-37,TB-38,TB-39,TB-40,TB-41,TB-42,TB-43,TB-44,TB-45,TB-46,TB-47,TB-48,TB-49,TB-50,TB-51,TB-52,TB-53,TB-54,TB-55,TB-56,TB-57,TB-58,TB-59,TB-60,TB-61,TB-62,TB-63,TB-64,TB-65,TB-66,TB-67,TB-68,TB-69,TB-70,TB-71,TB-72,TB-73,TB-74,TB-75,TB-76,TB-77,TB-78,TB-79,TB-80,TB-81,TB-82,TB-83,TB-84,TB-85,TB-86,TB-87,TB-88,TB-89,TB-90,TB-91,TB-92,TB-93,TB-94,TB-95,TB-96,TB-97,TB-98,TB-99,TB-100,TB-101,TB-102,TB-103,TB-104,TB-105,TB-106,TB-107,TB-108,TB-109,TB-110,TB-111,TB-112,TB-113,TB-114,TB-115,TB-116,TB-117,TB-118,TB-119,TB-120,TB-121,TB-122,TB-123,TB-124,TB-125,TB-126,TB-127,TB-128,TB-129,TB-130,TB-131,TB-132,TB-133,TB-134,TB-135,TB-136,TB-137,TB-138,TB-139,TB-140,TB-141,TB-142,TB-143,TB-144,TB-145,TB-146,TB-147,TB-148,TB-149,TB-150,TB-151,TB-152,TB-153,TB-154,TB-155,TB-156,TB-157,TB-158,TB-159,TB-160,TB-161,TB-162,TB-163,TB-164,TB-165,TB-166,TB-167,TB-168,TB-169,TB-170,TB-171,TB-172,TB-173,TB-174,TB-175,TB-176,TB-177,TB-178,TB-179,TB-180,TB-181,TB-182,TB-183,TB-184,TB-185,TB-186,TB-187,TB-188,TB-189,TB-190,TB-191,TB-192,TB-193,TB-194,TB-195,TB-196,TB-197,TB-198,TB-199,TB-200,TB-201,TB-202,TB-203,TB-204,TB-205,TB-206,TB-207,TB-208,TB-209,TB-210,TB-211,TB-212,TB-213,TB-214,TB-215,TB-216,TB-217,TB-218,TB-219,TB-220,TB-221,TB-222,TB-223,TB-224,TB-225,TB-226,TB-227,TB-228,TB-229,TB-230,TB-231,TB-232,TB-233,TB-234,TB-235,TB-236,TB-237,TB-238,TB-239,TB-240,TB-241,TB-242,TB-243,TB-244,TB-245,TB-246,TB-247,TB-248,TB-249,TB-250,TB-251,TB-252,TB-253,TB-254,TB-255,TB-256,TB-257,TB-258,TB-259,TB-260,TB-261,TB-262,TB-263,TB-264,TB-265,TB-266,TB-267,TB-268,TB-269,TB-270,TB-271,TB-272,TB-273,TB-274,TB-275,TB-276,TB-277,TB-278,TB-279,TB-280,TB-281,TB-282,TB-283,TB-284,TB-285,TB-286,TB-287,TB-288,TB-289,TB-290,TB-291,TB-292,TB-293,TB-294,TB-295,TB-296,TB-297,TB-298,TB-299,TB-300,TB-301,TB-302,TB-303,TB-304,TB-305,TB-306,TB-307,TB-308,TB-309,TB-310,TB-311,TB-312,TB-313,TB-314,TB-315,TB-316,TB-317,TB-318,TB-319,TB-320,TB-321,TB-322,TB-323,TB-324,TB-325,TB-326,TB-327,TB-328,TB-329,TB-330,TB-331,TB-332,TB-333,TB-334,TB-335,TB-336,TB-337,TB-338,TB-339,TB-340,TB-341,TB-342,TB-343,TB-344,TB-345,TB-346,TB-347,TB-348,TB-349,TB-350,TB-351,TB-352,TB-353,TB-354,TB-355,TB-356,TB-357,TB-358,TB-359,TB-360,TB-361,TB-362,TB-363,TB-364,TB-365,TB-366,TB-367,TB-368,TB-369,TB-370,TB-371,TB-372,TB-373,TB-374,TB-375,TB-376,TB-377,TB-378,TB-379,TB-380,TB-381,TB-382,TB-383,TB-384,TB-385,TB-386,TB-387,TB-388,TB-389,TB-390,TB-391,TB-392,TB-393,TB-394,TB-395,TB-396,TB-397,TB-398,TB-399,TB-400,TB-401,TB-402,TB-403,TB-404,TB-405,TB-406,TB-407,TB-408,TB-409,TB-410,TB-411,TB-412,TB-413,TB-414,TB-415,TB-416,TB-417,TB-418,TB-419,TB-420,TB-421,TB-422,TB-423,TB-424,TB-425,TB-426,TB-427,TB-428,TB-429,TB-430,TB-431,TB-432,TB-433,TB-434,TB-435,TB-436,TB-437,TB-438,TB-439,TB-440,TB-441,TB-442,TB-443,TB-444,TB-445,TB-446,TB-447,TB-448,TB-449,TB-450,TB-451,TB-452,TB-453,TB-454,TB-455,TB-456,TB-457,TB-458,TB-459,TB-460,TB-461,TB-462,TB-463,TB-464,TB-465,TB-466,TB-467,TB-468,TB-469,TB-470,TB-471,TB-472,TB-473,TB-474,TB-475,TB-476,TB-477,TB-478,TB-479,TB-480,TB-481,TB-482,TB-483,TB-484,TB-485,TB-486,TB-487,TB-488,TB-489,TB-490,TB-491,TB-492,TB-493,TB-494,TB-495,TB-496,TB-497,TB-498,TB-499,TB-500,TB-501,TB-502,TB-503,TB-504,TB-505,TB-506,TB-507,TB-508,TB-509,TB-510,TB-511,TB-512,TB-513,TB-514,TB-515,TB-516,TB-517,TB-518,TB-519,TB-520,TB-521,TB-522,TB-523,TB-524,TB-525,TB-526,TB-527,TB-528,TB-529,TB-530,TB-531,TB-532,TB-533,TB-534,TB-535,TB-536,TB-537,TB-538,TB-539,TB-540,TB-541,TB-542,TB-543,TB-544,TB-545,TB-546,TB-547,TB-548,TB-549,TB-550,TB-551,TB-552,TB-553,TB-554,TB-555,TB-556,TB-557,TB-558,TB-559,TB-560,TB-561,TB-562,TB-563,TB-564,TB-565,TB-566,TB-567,TB-568,TB-569,TB-570,TB-571,TB-572,TB-573,TB-574,TB-575,TB-576,TB-577,TB-578,TB-579,TB-580,TB-581,TB-582,TB-583,TB-584,TB-585,TB-586,TB-587,TB-588,TB-589,TB-590,TB-591,TB-592,TB-593,TB-594,TB-595,TB-596,TB-597,TB-598,TB-599,TB-600,TB-601,TB-602,TB-603,TB-604,TB-605,TB-606,TB-607,TB-608,TB-609,TB-610,TB-611,TB-612,TB-613,TB-614,TB-615,TB-616,TB-617,TB-618,TB-619,TB-620,TB-621,TB-622,TB-623,TB-624,TB-625,TB-626,TB-627,TB-628,TB-629,TB-630,TB-631,TB-632,TB-633,TB-634,TB-635,TB-636,TB-637,TB-638,TB-639,TB-640,TB-641,TB-642,TB-643,TB-644,TB-645,TB-646,TB-647,TB-648,TB-649,TB-650,TB-651,TB-652,TB-653,TB-654,TB-655,TB-656,TB-657,TB-658,TB-659,TB-660,TB-661,TB-662,TB-663,TB-664,TB-665,TB-666,TB-667,TB-668,TB-669,TB-670,TB-671,TB-672,TB-673,TB-674,TB-675,TB-676,TB-677,TB-678,TB-679,TB-680,TB-681,TB-682,TB-683,TB-684,TB-685,TB-686,TB-687,TB-688,TB-689,TB-690,TB-691,TB-692,TB-693,TB-694,TB-695,TB-696,TB-697,TB-698,TB-699,TB-700,TB-701,TB-702,TB-703,TB-704,TB-705,TB-706,TB-707,TB-708,TB-709,TB-710,TB-711,TB-712,TB-713,TB-714,TB-715,TB-716,TB-717,TB-718,TB-719,TB-720,TB-721,TB-722,TB-723,TB-724,TB-725,TB-726,TB-727,TB-728,TB-729,TB-730,TB-731,TB-732,TB-733,TB-734,TB-735,TB-736,TB-737,TB-738,TB-739,TB-740,TB-741,TB-742,TB-743,TB-744,TB-745,TB-746,TB-747,TB-748,TB-749,TB-750,TB-751,TB-752,TB-753,TB-754,TB-755,TB-756,TB-757,TB-758,TB-759,TB-760,TB-761,TB-762,TB-763,TB-764,TB-765,TB-766,TB-767,TB-768,TB-769,TB-770,TB-771,TB-772,TB-773,TB-774,TB-775,TB-776,TB-777,TB-778,TB-779,TB-780,TB-781,TB-782,TB-783,TB-784,TB-785,TB-786,TB-787,TB-788,TB-789,TB-790,TB-791,TB-792,TB-793,TB-794,TB-795,TB-796,TB-797,TB-798,TB-799,TB-800,TB-801,TB-802,TB-803,TB-804,TB-805,TB-806,TB-807,TB-808,TB-809,TB-810,TB-811,TB-812,TB-813,TB-814,TB-815,TB-816,TB-817,TB-818,TB-819,TB-820,TB-821,TB-822,TB-823,TB-824,TB-825,TB-826,TB-827,TB-828,TB-829,TB-830,TB-831,TB-832,TB-833,TB-834,TB-835,TB-836,TB-837,TB-838,TB-839,TB-840,TB-841,TB-842,TB-843,TB-844,TB-845,TB-846,TB-847,TB-848,TB-849,TB-850,TB-851,TB-852,TB-853,TB-854,TB-855,TB-856,TB-857,TB-858,TB-859,TB-860,TB-861,TB-862,TB-863,TB-864,TB-865,TB-866,TB-867,TB-868,TB-869,TB-870,TB-871,TB-872,TB-873,TB-874,TB-875,TB-876,TB-877,TB-878,TB-879,TB-880,TB-881,TB-882,TB-883,TB-884,TB-885,TB-886,TB-887,TB-888,TB-889,TB-890,TB-891,TB-892,TB-893,TB-894,TB-895,TB-896,TB-897,TB-898,TB-899,TB-900,TB-901,TB-902,TB-903,TB-904,TB-905,TB-906,TB-907,TB-908,TB-909,TB-910,TB-911,TB-912,TB-913,TB-914,TB-915,TB-916,TB-917,TB-918,TB-919,TB-920,TB-921,TB-922,TB-923,TB-924,TB-925,TB-926,TB-927,TB-928,TB-929,TB-930,TB-931,TB-932,TB-933,TB-934,TB-935,TB-936,TB-937,TB-938,TB-939,TB-940,TB-941,TB-942,TB-943,TB-944,TB-945,TB-946,TB-947,TB-948,TB-949,TB-950,TB-951,TB-952,TB-953,TB-954,TB-955,TB-956,TB-957,TB-958,TB-959,TB-960,TB-961,TB-962,TB-963,TB-964,TB-965,TB-966,TB-967,TB-968,TB-969,TB-970,TB-971,TB-972,TB-973,TB-974,TB-975,TB-976,TB-977,TB-978,TB-979,TB-980,TB-981,TB-982,TB-983,TB-984,TB-985,TB-986,TB-987,TB-988,TB-989,TB-990,TB-991,TB-992,TB-993,TB-994,TB-995,TB-996,TB-997,TB-998,TB-999,TB-1000

DRAFTER: CM02 DRAWING FILENAME: 22-539E300 PATHNAME: G:\22\539\EL\Sheets DATE: 20 December 2024 TIME: 3:32 pm

isolite

E3MAC-1P

1,000-12,500 VA Single Phase Modular AC Inverter

ASSEMBLED IN THE USA

MAXIMUM BREAKERS

Model	# of Breakers Normally On	# of Breakers Normally On with TA	# of Breaker Normally On with MB	# of Breaker Normally On with EO	# of Breakers Normally On with TA + MB	# of Breakers Normally On with MB + EO	# of Breakers Normally On with TA + EO	# of Breakers Normally On with TA + MB + EO	# of Breakers Normally Off	# of Breakers Switched
E3MAC-1000-1P	8	5	7	7	4	6	4	3	4	4
→ E3MAC-1600-1P	11	7	10	10	6	9	6	5	6	6
E3MAC-2200-1P	11	7	10	10	6	9	6	5	6	6
E3MAC-2800-1P	11	7	10	10	6	9	6	5	6	6
E3MAC-3000-1P	11	7	10	10	6	9	6	5	6	6
E3MAC-4000-1P	12	8	11	11	7	10	7	6	8	8
E3MAC-5000-1P	12	8	11	11	7	10	7	6	8	8
E3MAC-6000-1P	12	8	11	11	7	10	7	6	8	8
E3MAC-8000-1P	24	16	23	23	15	22	15	14	12	12
E3MAC-10000-1P	24	16	23	23	15	22	15	14	12	12
E3MAC-12500-1P	24	16	23	23	15	22	15	14	12	12

WEIGHT & DIMENSIONS

Model	Cabinet Config (See Next Page)	# of Cabinets	Inverter Cabinet Weight	Battery Cabinet Weight	Battery Count	Pallet Count	Total Weight
E3MAC-1000-1P	A	1	308		4	1	343
→ E3MAC-1600-1P	G	1	414		6	1	549
E3MAC-2200-1P	G	1	492		8	1	627
E3MAC-2800-1P	G	1	570		10	1	705
E3MAC-3000-1P	G	1	648		12	1	783
E3MAC-4000-1P	B	1	995		8	2	1060
E3MAC-5000-1P	B	1	1155		10	2	1220
E3MAC-6000-1P	B	1	1280		12	2	1380
E3MAC-8000-1P	E/H	2	400	1570	16	3	2020
E3MAC-10000-1P	E/H	2	400	1890	20	3	2340
E3MAC-12500-1P	E/H	2	400	2210	24	3	2660

ELECTRICAL DATA

Model	Power Rating (kW)	Minimum Feed Breaker					Suggested Feed Breaker					Full Load BTU/Hr	AH Ratings
		Input Voltage IA	Input Voltage IB	Input Voltage IC	Input Voltage ID	Input Voltage IE	Input Voltage IA	Input Voltage IB	Input Voltage IC	Input Voltage ID	Input Voltage IE		
E3MAC-1000-1P	1.0 kW	13.0 A	5.6 A	7.5 A	6.5 A	3.3 A	20 A	20 A	20 A	20 A	20 A	68	2640
→ E3MAC-1600-1P	1.6 kW	20.8 A	9.0 A	12.0 A	10.4 A	5.2 A	30 A	20 A	20 A	20 A	20 A	109	3960
E3MAC-2200-1P	2.2 kW	28.6 A	12.4 A	16.5 A	14.3 A	7.2 A	30 A	20 A	20 A	20 A	20 A	150	5280
E3MAC-2800-1P	2.8 kW	36.5 A	15.8 A	21.0 A	18.2 A	9.1 A	40 A	20 A	30 A	20 A	20 A	190	6600
E3MAC-3000-1P	3.0 kW	39.1 A	16.9 A	22.5 A	19.5 A	9.8 A	40 A	20 A	30 A	20 A	20 A	209	7920
E3MAC-4000-1P	4.0 kW	52.1 A	22.6 A	30.0 A	26.0 A	13.0 A	60 A	30 A	40 A	30 A	20 A	286	9600
E3MAC-5000-1P	5.0 kW	65.1 A	28.2 A	37.6 A	32.6 A	16.3 A	70 A	30 A	40 A	40 A	20 A	355	12000
E3MAC-6000-1P	6.0 kW	78.1 A	33.8 A	45.1 A	39.1 A	19.5 A	80 A	40 A	50 A	40 A	20 A	426	14400
E3MAC-8000-1P	8.0 kW	104.2 A	45.1 A				110 A	50 A				563	19200
E3MAC-10000-1P	10.0 kW		56.4 A					60 A				716	24000
E3MAC-12500-1P	12.5 kW		70.5 A					80 A				852	28800

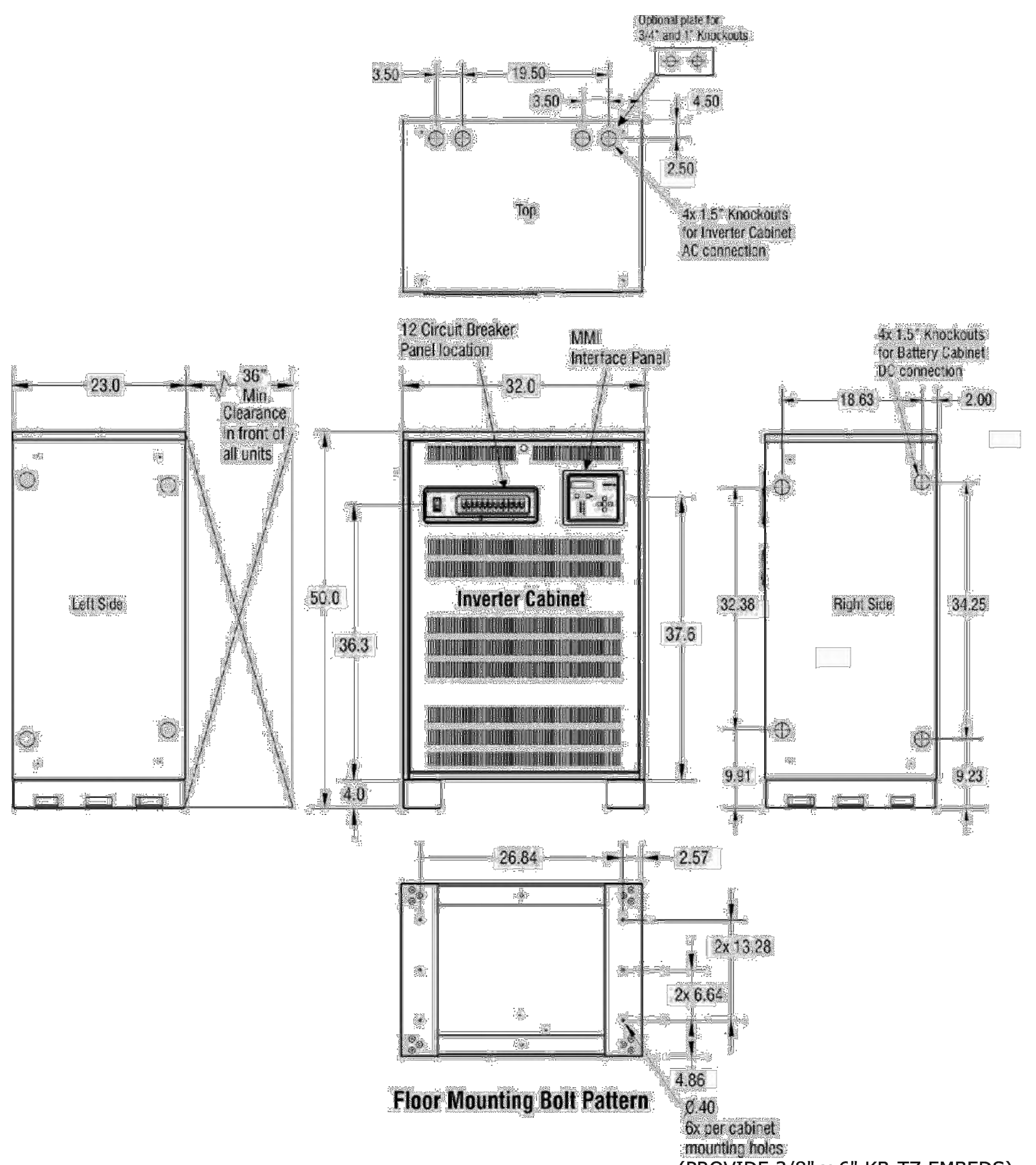

(PROVIDE 3/8" x 6" KB-TZ EMBEDS)

Overall Mounting Dimensions and Knockout Locations

Technical Support / Installation Questions – Call 1-800-967-5573 (Monday-Friday, 8AM-5PM EST) 2

EMERGENCY LIGHTING INVERTER 3 - E300
SCALE: NONE

isolite

E3MAC-1P

1,000-12,500 VA Single Phase Modular AC Inverter

DATE: COMMENTS:
PROJECT

ASSEMBLED IN THE USA

FEATURES

- Optional Web-based Monitoring Platform – easily view, interact with, download and manage records as needed on any PC or mobile device
- Programmable and password protected user interface
- 98% efficient for minimal BTU losses
- PWM Inverter provides pure sine wave output with less than 3% THD
- Crest factor >4 overload protection for demanding high in-rush loads
- Programmable transfer time – select between standard and fast transfer times for load and site compatibility
- UL listed 90 minute run-time
- Compatible with all lighting loads, including HID
- Variable time delay
- Battery recharges in less than 24 hours
- Single phase output
- Start-up diagnostics checks for proper installation

SEISMIC CERTIFIED

- Optional Zone 4 Seismic Restraints are shaker table tested and seismic certified to the latest California Building Code (CBC) 2016
- The shake table testing was performed in accordance with International Code Council-Evaluation Service Acceptance Criteria 156 (ICC-ES AC156)
- OSHPD (California Office of Statewide Health Planning and Development)

ORDERING INFORMATION *E3MAC-1000-1P-LC-IA-OA-C##-O##-S##*

1. SERIES: E3MAC -
2. VA RATING: -
3. PHASE: 1P -
4. BATTERY TYPE: LC -
5. INPUT VOLTAGE: -
6. OUTPUT VOLTAGE: -

1000 1000 VA Single Phase | **5000** 5000 VA Single Phase
→ **1600** 1600 VA Single Phase | **6000** 6000 VA Single Phase
2200 2200 VA Single Phase | **8000** 8000 VA Single Phase[4]
2800 2800 VA Single Phase | **10000** 10000 VA Single Phase[4]
3000 3000 VA Single Phase | **12500** 12500 VA Single Phase[4]
4000 4000 VA Single Phase

1P Single Phase

LC Lead Calcium

IA 120V ←
IB 277V
IC 208V[3]
IE 480V[3]

OA 120V ←
OB 277V

7. OUTPUT BREAKER - NORMALLY ON*: 6 -
8. OUTPUT BREAKER - NORMALLY OFF*: -
9. OUTPUT BREAKER - SWITCHED*: -

C* * Normally On Breakers | **O*** * Normally Off Breakers | **S*** * Switched Breakers

SEE BREAKER CONFIGURATION TABLE ON PAGE 3 FOR MAXIMUM BREAKERS

10. OPTIONS

BLANK = NO OPTION

MB	Maintenance Bypass Switch	**TA**	Trip Alarm with Breaker	**BTMS**	Battery Thermal Management System
CB	Custom Breaker	**RA**	Remote Annunciator (Not Included with TB)	**EO**	Emergency Power Off
DT	Delayed Transfer	**TB**	Programmable Terminal Block (Not Included with RA)	**WEB**	Web Monitoring Connection[2]
EBW20	Extended Battery Warranty	**Z4**	Seismic Zone 4 Restraints (Includes KE)	**LO**	Breaker Locks
EEW	Extended Electronics Warranty	**WB**	Wall Mounting Bracket[1]		
KE	Keyed Enclosure	**BI**	BMS Integration		

NOTE Maximum number of OUTPUT breakers supported depends on sizing and option selection. Contact factory for specific details.

isolite

E3MAC-1P

1,000-12,500 VA Single Phase Modular AC Inverter

ASSEMBLED IN THE USA

ACCESSORIES; ORDER SEPARATELY

- **E3MAC-MP#** = Maintenance Plan plus number of years (#)
- **FS** = Factory Startup

SPECIFICATIONS

OPTIONAL FEATURES

- Maintenance bypass switch
- Circuit breakers – supervised or unsupervised
- Maintenance contract/plan
- Remote Annunciator
- Factory startup – increases electronics warranty to 3 years
- Circuit breaker protected loads (switched, normally on, and normally off)
- Fault summary alarm and 2 programmable alarms – form C dry contacts
- Keyed lockable enclosure

FRONT PANEL

- Modern 4x20 LCD character display with white LED back-light
- Heads-up diagnostic LEDs include 5 status (AC present, battery charging, inverter power, system ready, switched load energized), fault summary LED, and 5 specific faults (unit in bypass, circuit breaker trip, startup fault, charger fault, inverter fault)
- Dedicated System Test button – initiates 30-second test with UL compliant diagnostics
- 5-button keypad for menu navigation
- Sonic alarm with dedicated enable/disable pushbutton with heads up LED. Alarm silence has 24-hour ring-back for alarm reminder
- SD memory card – download and store all events, tests, and alarm logs (password protected)
- USB connector – access to all event, tests, and alarm logs (password protected)
- Ethernet – 10 BASE-T, TCP/IP web serving

BATTERY

- Front access VRLA batteries with 10-Year pro-rated warranty

TEMPERATURE RATING

- From 68°F to 86°F

Battery service life will be negatively impacted at ambient temperatures above 77°F

ENVIRONMENTAL

- Operating temp: 20C° to 30C° (68°F to 86°F)
- Storage temp: Electronics - 20C° to 70C° (68°F to 158°F)

BATTERY STORAGE TEMP	
51°F (11°C) TO 77°F (25°C)	180 DAYS
78°F (26°C) TO 92°F (33°C)	90 DAYS

- Relative humidity: <95 % (non-condensing)

MAINTENANCE PLAN

- Once per year the manufacturer's technician shall visit the site to perform maintenance and software upgrades as needed. Maintenance shall include battery voltage checks, torque setting verification, cleaning, and a thorough visual inspection. All electronics warranties shall be extended to the duration of the Maintenance Plan. Maintenance Plans can be purchased for a duration of 1 year to 5 years.

APPROVALS

- UL 924
- OSHPD Seismic Certified (with Z4 option)
- New York City Approved, Calendar Number 51575
- NFPA 101 Life Safety Code
- NFPA 70-NEC
- OSHA
- NEMA Type 1 enclosure
- BAA Compliant

BMS INTEGRATION

- BACNet IP
- BACNet MS/TP
- Modbus TCP
- Modbus RTU

WARRANTY

- Isolite warrants the E3MAC series electronics assembly against defects in material and workmanship for a period of 2 years, or 3 years with factory startup option. Extended Warranty options available.
- Isolite warrants the E3MAC series lead calcium batteries for a 1-year full and 9-year pro-rated limited warranty.
- For further details, refer to General Warranty and Obligations in the Isolite manual or on our website.
- The EEW option extends the electronics warranty to 5 years. Batteries are not included in the extended warranty.

ISOLITE ▪ WWW.ISOLITE.COM
ISOLITE HEADQUARTERS ▪ 800.888.5483 ▪ 31 WATERLOO AVENUE BERWYN, PA 19312
ISOLITE WEST ▪ 800.799.5343 ▪ 3563 SUELDO SUITE M, SAN LUIS OBISPO, CA 93401

D-7.2.3.0-217A ▪ REV-18 ▪ 20241212

SPECIFICATIONS AND DETAILS ARE SUBJECT TO CHANGE WITHOUT NOTIFICATION. CONTACT ISOLITE FOR UP TO DATE DETAILS.

NOT USED 2 - E300
SCALE: NONE

LIGHTING FIXTURE SCHEDULE

TAG	SYMBOL	WATT	DESCRIPTION	LAMP - TYPE AND QUANTITY	MOUNTING	MANUFACTURER AND MODEL NUMBER	REMARKS
OD -		25W	EXTERIOR FLOOD	LED	SURFACE	LITHONIA # WDGEZ - LED - P3 - 4000K - 70 CRI - TYPE 4M OPTIC WITH PHOTOCELL INSTALL THIS FIXTURE FOR ALL EXTERIOR LIGHTS & CONNECT TO EM INVERTER	WHITE

LIGHTING FIXTURE SCHEDLE 1 - E300
SCALE: NONE

DIVISION OF THE STATE ARCHITECT

IDENTIFICATION STAMP
DIV. OF THE STATE ARCHITECT
APP: 03-124589 INC:
REVIEWED FOR
SS ☑ FLS ☑ ACS ☑
DATE: 04/15/2025

VENTURA COUNTY COMMUNITY COLLEGE DISTRICT
761 EAST DAILY DRIVE
CAMARILLO, CALIFORNIA 93010
TEL: (805) 652-5500

PROJECT TITLE AND SCHOOL LOCATION

VENTURA COMMUNITY COLLEGE STEM MODULAR BUILDING
VENTURA COMMUNITY COLLEGE
4667 TELEGRAPH RD.
VENTURA, CA 93003

COMMISSIONED ARCHITECT

AMADOR

amador whittle architects, inc.
28328 AGOURA RD, 203 | AGOURA HILLS CA, 91301 | 805-558-4334

CONSULTANT

LUCCI & ASSOCIATES INC.
CONSULTING ELECTRICAL ENGINEERS
3251 CORTE MALPASO, #511
CAMARILLO, CA 93012-8094
(805) 389-6520 FAX (805) 389-6519

LUCCI & ASSOCIATES, INC. reserve their commonlaw copyright and other property rights in these plans. These plans and drawings are not to be reproduced, changed, or copied in any form or manner whatsoever without first obtaining the expressed written permission and consent of LUCCI & ASSOC. INC nor are they to be assigned to any third party without obtaining said written permission and consent.

STAMPS/SEALS

REGISTERED PROFESSIONAL ENGINEER KENNETH W. LUCCI No. E 8340 Exp. 09/30/2026 ELECTRICAL STATE OF CALIFORNIA

LICENSED ARCHITECT WILLIAM JORGE AMADOR C-20348 JANUARY 31, 2027 RENEWAL DATE STATE OF CALIFORNIA

DSA V3 SUBMITTAL 03/21/2025

SHEET TITLE:

LIGHTING FIXTURE SCHEDULE & SCHEMATIC PLAN

PROJECT NO.: 22-VCCCD-08	PROJECT ARCH: Designer		
DRAWN: LK/DS/IT	CHECKED: KL		

SHEET NUMBER:

E300

DATE: 12/20/24 SHEET: ___ OF ___

Copyright Lucci and Associates Consulting Electrical Engineers. Deviations from this drawing will not be made without their expressed written permission.

L.A.I.# 22-539 PAPER SIZE 42"x30"

Drafter: CM01; G:\22\539\EL\Sheets\22-539E300.dwg; DATE: AUG 22, 2024 TIME: 4:10 PM

DRAFTER: CM02 DRAWING FILENAME: 22-539E400 PATHNAME: G:\22\539\EL\Sheets DATE: 8 January 2025 TIME: 9:54 am

PRODUCT DATA SHEET — Protecting your technology investment.

Standard Rack

High quality, cost-effective storage solution for patch panels and network switches. The small footprint makes Standard Rack the best choice in many telecommunications and equipment rooms, especially where floor space is limited.

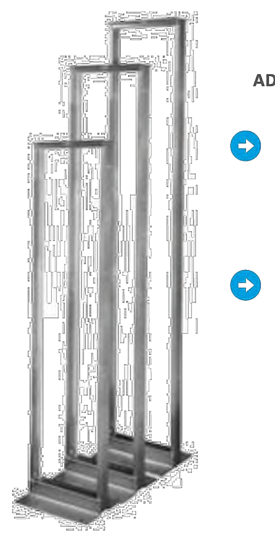

ADVANTAGES

Easy Equipment Installation
Marked and numbered rack-mount spaces (U)

Prepared Grounding Location
Built-in attachment point for a ground (earthing) connection

c UL us LISTED

HCAI OPM-0261

KEY FEATURES

- Supports 19" EIA rack-mount equipment designed for two-post panel mounting, like patch panels and network switches.
- Easy positioning of equipment with marked and numbered U.
- Quick attachment of equipment with threaded equipment mounting holes and included equipment-mounting screws.
- Delivers unassembled in a single carton—quick and easy bolt-together assembly takes less than 10 minutes.
- Lightweight aluminum construction for easy transport and positioning during installation.
- Integrated grounding with a built-in attachment point for a ground (earthing) connection.
- Quickly attach any CPI vertical cable manager to the side of the rack through pre-punched web channel holes.
- Floor-mount holes on the base angles make it easy to secure the rack to the floor with a concrete, wood or raised floor installation kit.

SPECIFICATIONS

Available Sizes	Heights: 84" (2.1 m), 96" (2.4 m), 108", (2.7 m)
	Width: 20.3" (516.1 mm)
	Depth: 15" (381 mm)
Equipment Space	Heights: 45U, 52U, 58U
	Width: 19" EIA (17-3/4" clearance)
	Depth: 20" (508 mm) *Note: Double-sided shelves for 26"D (660.4 mm) equipment are available. Use QuadraRack™ 4-Post Frame when rack-mount equipment exceeds 20"D (508 mm).*
Equipment Support	1 pair C-shaped equipment mounting channels fixed in place
	19"W, EIA-310-D compliant
	Universal hole pattern, 5/8"-5/8"-1/2" (15.9 mm x 15.9 mm x 12.7 mm) vertical hole spacing
	Threaded #12-24 equipment mounting holes; includes 50 each #12-24 equipment mounting screws
Load Capacity	1000 lb (453.6 kg) of equipment
Grounding/Bonding	Top angles, base angles and side channels are electrically bonded by assembly hardware
	A masked mounting location for a ground lug with two 1/4-20 threaded studs spaced 5/8" apart is provided inside the side channel, near the top and bottom of the rack
	Use Grounding Jumper (PN 40159-008) as a rack bonding conductor
Certifications	EIA-310-D compliant; UL and cUL Listed as a communications circuit accessory
	OSHPD Preapproval of Manufacturer's Certification (OPM-0261)
Material	Aluminum extrusion
Construction	Bolted assembly
	Ships unassembled
Finish	Clear grained aluminum or Epoxy-polyester hybrid powder coat paint
	Available in Black, Gray or Glacier White
Environment	For indoor use only, in environmentally controlled areas; may not be used outdoors, in industrial or harsh environments or in plenum spaces.

PRODUCT DATA SHEET — STANDARD RACK

DIMENSIONS

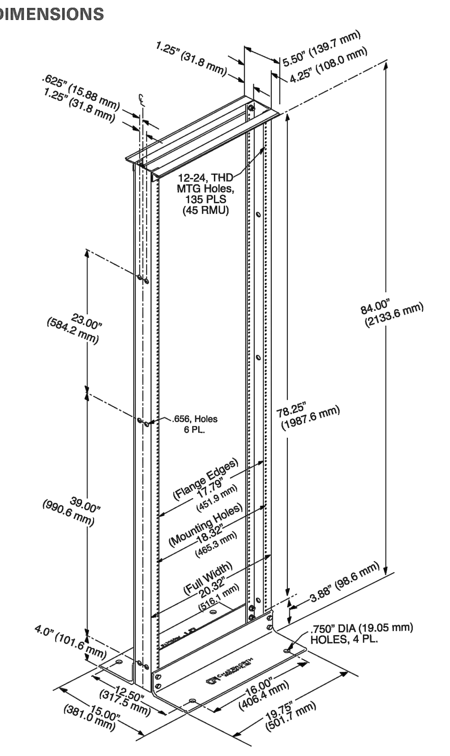

7' (2.1 m) Rack Shown

Application
The Standard Rack is a high-quality, cost-effective storage solution for patch panels and network switches that use less floor space than a cabinet or a four-post rack. The small 20.3"W x 15"D (516.1 mm x 381 mm) footprint makes Standard Rack the best choice in many telecommunications and equipment rooms, especially where floor space is limited.

Specifications
The Standard Rack meets project specifications, will hold 1,000 lb (453.1 kg) of equipment, has integrated grounding and is UL Listed as a communications circuit accessory. Support 19" W EIA rack-mount equipment or shelves with the Standard Rack, which is available in three heights. Equipment attaches to the front or rear of the 3" D (80 mm) vertical mounting channels with screws. Mounting positions are marked and numbered, making it easy to position and install equipment or shelves.

Assembly
Racks deliver unassembled in a compact carton and are easy to assemble. Components bolt together with included hardware; assembly takes approximately 10 minutes. Two-post racks must be secured to building structure. The Standard Rack has pre-punched base angles, making it easy to attach the rack to the floor using a CPI installation kit for wood, slab or raised floors.

Cable Management
Because most Standard Rack applications require cable management, CPI's vertical cable managers attach directly to the side of the Standard Rack. Vertical cable managers organize cables by U simplifying future moves, adds and changes to the network. The best solution includes horizontal managers in-between patch panels and network switches to fan patch cords into individual port connections.

Contact CPI Technical Support for configuration assistance.

ORDERING INFORMATION

Part Number	Description	Shipping Weight lb (kg)
55053-X03	7'H (2.1 m) x 19"W, 45U	31 (14.1)
55053-X15	8'H (2.4 m) x 19"W, 52U	37 (16.8)
55053-X08	9'H (2.7 m) x 19"W, 58U	40 (18.1)

X=color: 1=Gray, 5=Clear, 7=Black, E=Glacier White

IDF RACK - CONTRACTOR PROVIDED

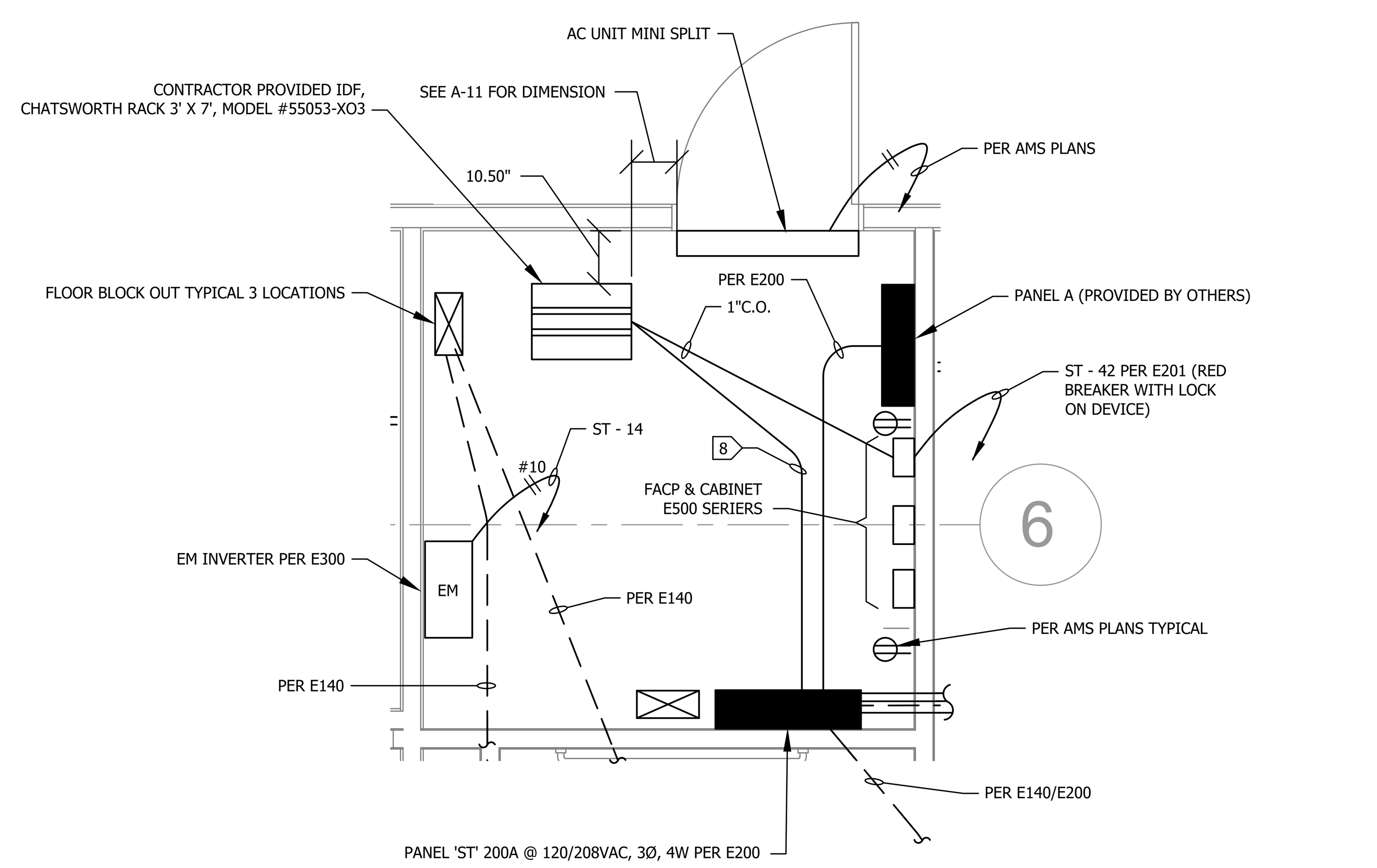

ENLARGED ELECTRICAL ROOM 108 (2 / E400)
SCALE: 1/2"=1'-0"

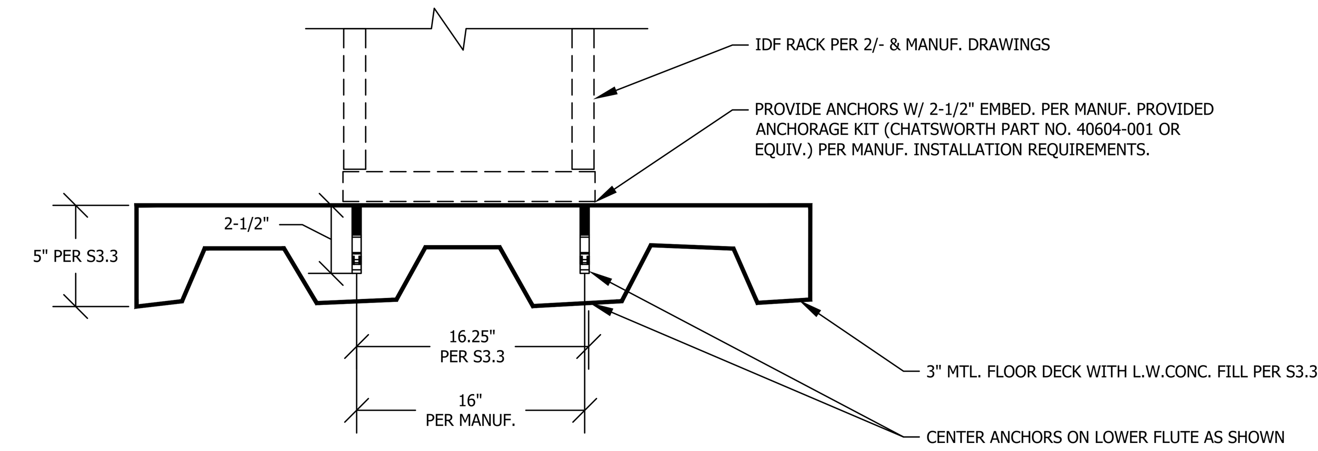

IDF RACK ANCHORAGE (3 / E400)
SCALE: NONE

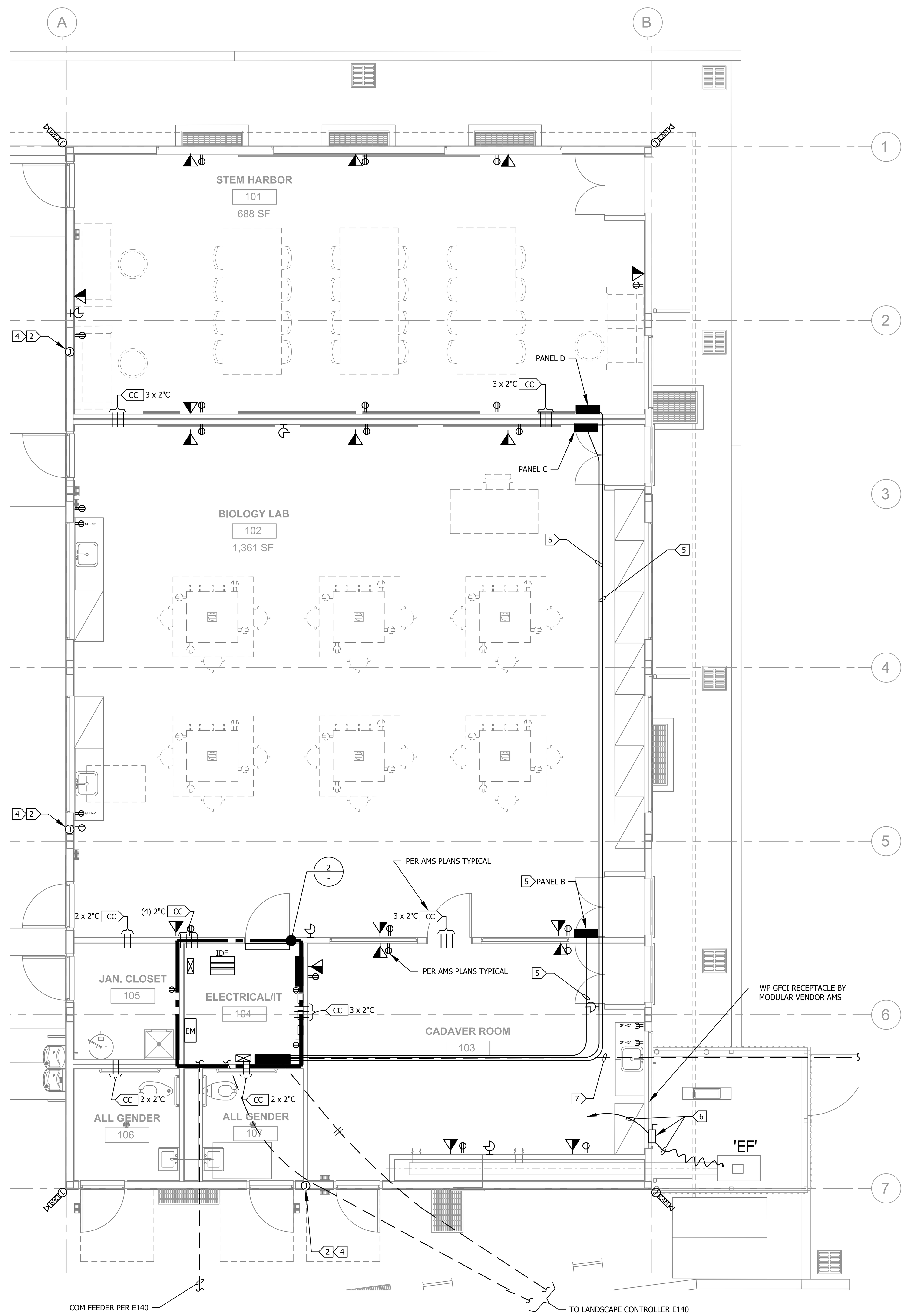

BUILDING POWER & COM PLAN (1 / E400)
SCALE: 1/4"=1'-0"

SHEET NOTES:

1. CONTRACTOR SHALL FIELD VERIFY LOCATION & REQUIREMENTS OF ALL DEVICES REQUIRING ELECTRICAL CONNECTION PRIOR TO BID PROPOSAL, ROUGH-IN AND FINISH.
2. COORDINATE WORK WITH OTHER TRADES. OBTAIN ALL DRAWINGS THAT WILL REQUIRE COORDINATION AND PROVIDE ALL ELECTRICAL CONNECTIONS, DEVICES, AND WIRING REQUIRED WHETHER SHOWN ON ELECTRICAL DRAWINGS OR NOT.
3. CONTRACTOR SHALL FURNISH AND INSTALL PULL BOXES AS REQUIRED TO INSTALL CONDUCTORS PER CONDUCTOR MANUFACTURERS RECOMMENDATIONS, PER THE NATIONAL ELECTRICAL CODE AND PER LOCAL AUTHORITIES HAVING JURISDICTION.
4. 3/4" CONDUIT MINIMUM U.O.N.
5. PROVIDE CODE SIZE EQUIPMENT GROUNDING CONDUCTORS IN ALL OCCUPIED CONDUITS.
6. VERIFY LOCATION OF ALL DEVICES ON ARCHITECTURAL PLANS.
7. VERIFY THE EXACT ROUTING OF ALL EXPOSED CONDUIT WITH OWNER PRIOR TO INSTALLATION.

ALL EQUIPMENT IS NEW

KEY NOTES:

1. 1"C - 2 #10 & 1 #10 GND FROM ARP TO POLE LIGHTS.
2. J-BOX FOR EXTERIOR FA SPEAKER (+96" AFG).
3. .75"C TO ACCESSIBLE CEILING CAVITY.
4. 1"C TO ACCESSIBLE CEILING CAVITY.
5. FEEDER PER E200.
6. FEEDER AND DISCONNECT PER E420.
7. FEEDER PER E140.
8. 1"C - 8 #10 & 1 #10 GND TO IDF MOUNTED RECEPTACLE FROM ST - 13, 15, 17, 19 & 1"C - 3 #10 & 1 #10 GND ST - 21-23 (30A RECEPTACLE L6-30R).

LEGEND

Symbol	Description
CC	CONDUIT CROSS OVERS - LOCATED IN WALL / ABOVE CEILING AT FULL HEIGHT WALLS - 2"C U.O.N.
(floor box)	FLOOR BOX WITH POWER & COM, PROVIDED WITH MODULAR BUT COM CONDUIT SHALL BE USED BY CONTRACTOR TO PROVIDE CAT 6 CABLING TO BUILDING IDF. CONTRACTOR TO PROVIDE J-HOOKS IN ACCESSIBLE CEILING TO IDF.
(clock/speaker)	CONTRACTOR PROVIDED AND INSTALLED CLOCK/SPEAKER, SEE E100, PROVIDE 2 CAT6 CABLES TO IDF
J CAM	CAMPUS SECURITY CAMERA
(triangle)	PROVIDE 2 CAT6 WITH JACKS TO IDF

DIVISION OF THE STATE ARCHITECT

IDENTIFICATION STAMP
DIV. OF THE STATE ARCHITECT
APP: 03-124589 INC:
REVIEWED FOR
SS ☑ FLS ☑ ACS ☑
DATE: 04/15/2025

VENTURA COUNTY COMMUNITY COLLEGE DISTRICT
761 EAST DAILY DRIVE
CAMARILLO, CALIFORNIA 93010
TEL: (805) 652-5500

PROJECT TITLE AND SCHOOL LOCATION

VENTURA COMMUNITY COLLEGE STEM MODULAR BUILDING
VENTURA COMMUNITY COLLEGE
4667 TELEGRAPH RD.
VENTURA, CA 93003

COMMISSIONED ARCHITECT

AMADOR
amador whittle architects, inc.
28328 AGOURA RD, 203 | AGOURA HILLS CA, 91301 | 805-558-4334

CONSULTANT
LUCCI & ASSOCIATES INC.
CONSULTING ELECTRICAL ENGINEERS
3251 CORTE MALPASO, #511
CAMARILLO, CA 93012-8094
(805) 389-6520 FAX (805) 389-6519

LUCCI & ASSOCIATES, INC. reserve their commonlaw copyright and other property rights in these plans. These plans and drawings are not to be reproduced, changed, or copied in any form or manner whatsoever without first obtaining the expressed written permission and consent of LUCCI & ASSOC. INC nor are they to be assigned to any third party without obtaining said written permission and consent.

STAMPS/SEALS

REGISTERED PROFESSIONAL ENGINEER KENNETH W. LUCCI No. E 8340 Exp. 09/30/2026 ELECTRICAL STATE OF CALIFORNIA

LICENSED ARCHITECT WILLIAM JORGE AMADOR C-20348 JANUARY 31, 2027 RENEWAL DATE STATE OF CALIFORNIA

DSA V3 SUBMITTAL 03/21/2025

SHEET TITLE:

BUILDING POWER & COM PLAN

PROJECT NO.:	22-VCCCD-08	PROJECT ARCH:	Designer
DRAWN:	LK/DS/IT	CHECKED:	KL

SHEET NUMBER:
E400

DATE: 12/20/24 SHEET: ___ OF ___

Copyright Lucci and Associates Consulting Electrical Engineers. Deviations from this drawing will not be made without their expressed written permission.

L.A.I.# 22-539 PAPER SIZE 42"x30"

Drafter: CM01; G:\22\539\EL\Sheets\22-539E400.dwg; DATE: DEC 20, 2024 TIME: 10:16 AM

ELECTRICAL SCHEDULE FOR MECHANICAL EQUIPMENT

TAG #	DESCRIPTION	H.P.	FLA	MAX OCP	VOLTAGE	PHASE	NEMA STARTER SIZE OR VFD	DISCONNECT	RECOMMENDED FUSE SIZE/TYPE *	REMARKS	PANEL/CIRCUIT NO.	FEEDER
EF 1	EXHAUST FAN	..	4	..	208	1Ø	..	15A/2P	8A	..	ST-21-23	3/4"C-2#12 & 1#12 GROUND
WH 1	WATER HEATER		25		208	1Ø		30A/2P	NONE		ST-28-30	3/4"C-2#8 & 1#10 GROUND

* ALL FUSES BY BUSSMAN AND SHALL BE SIZED PER MANUFACTURERS RECOMMENDATION.

SHEET NOTES:

1. FIELD VERIFY MECHANICAL EQUIPMENT LOCATIONS.
2. SEE ELECTRICAL SCHEDULE FOR MECHANICAL EQUIPMENT FOR ELECTRICAL REQUIREMENTS.
3. ALL WORK SHALL BE COORDINATED WITH OTHER TRADES. .
4. THE FINAL CONNECTIONS TO EQUIPMENT SHALL BE LIQUIDTIGHT FLEXIBLE METAL CONDUIT. INSTALL WITH ENOUGH SLACK TO PRECLUDE VIBRATION TRANSMISSION. SUPPORT SHALL BE PER N.E.C. ARTICLE 351-8
5. PROVIDE WEATHERPROOF AND EXTERIOR RATED DEVICES IN ALL EXTERIOR AREAS.
6. CONTRACTOR SHALL VERIFY LOCATION & REQUIREMENTS OF ALL ELECTRICAL DEVICES PRIOR TO BID, ROUGH-IN & INSTALLATION.
7. EACH DISCONNECT OR STARTER AND A SPARE SET OF FUSES SHALL BE CONTRACTOR PROVIDED.

KEY NOTES:

1. FOR FEEDER AND DISCONNECT INFORMATION SEE ELECTRICAL SCHEDULE FOR MECHANICAL EQUIPMENT THIS SHEET.
2. PROVIDE 3/4"C & CONTROLS PER MECHANICAL.

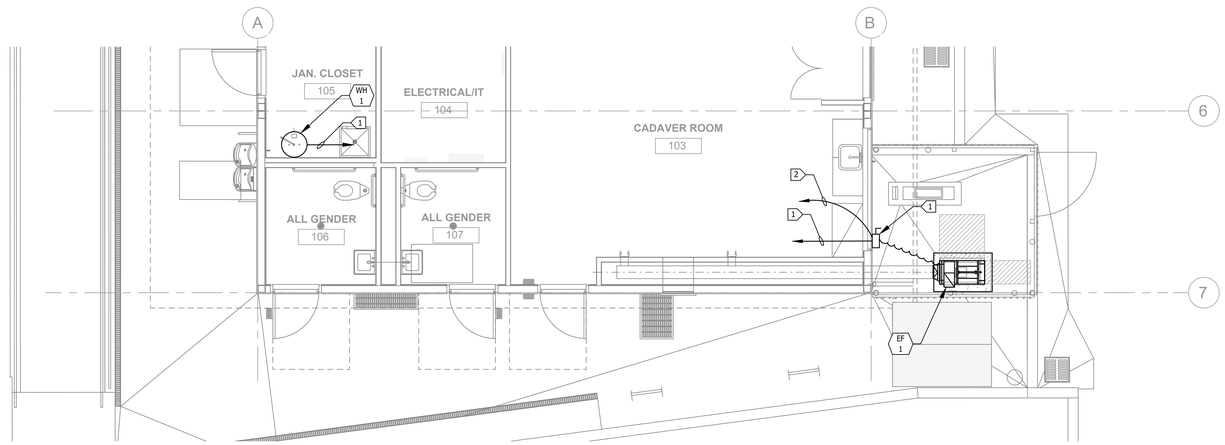

SCALE: 1/4"=1'-0"
0 2' 4' 8'

MECHANICAL POWER PLAN 1 - E420 -
SCALE: 1/4"=1'-0"

N

DIVISION OF THE STATE ARCHITECT

IDENTIFICATION STAMP
DIV. OF THE STATE ARCHITECT
APP: 03-124589 INC:
REVIEWED FOR
SS ☑ FLS ☑ ACS ☑
DATE: 04/15/2025

VENTURA COUNTY COMMUNITY COLLEGE DISTRICT
MOORPARK OXNARD VENTURA

VENTURA COUNTY COMMUNITY COLLEGE DISTRICT

761 EAST DAILY DRIVE
CAMARILLO, CALIFORNIA 93010
TEL: (805) 652-5500

PROJECT TITLE AND SCHOOL LOCATION

VENTURA COMMUNITY COLLEGE STEM MODULAR BUILDING

VENTURA COMMUNITY COLLEGE
4667 TELEGRAPH RD.
VENTURA, CA 93003

COMMISSIONED ARCHITECT

AMADOR

amador whittle architects, inc.
28328 AGOURA RD. 203 | AGOURA HILLS CA. 91301 | 805-558-4334

CONSULTANT

LUCCI & ASSOCIATES INC.
CONSULTING ELECTRICAL ENGINEERS
3251 CORTE MALPASO, #611
CAMARILLO, CA 93012-8094
(805) 389-6520 FAX (805) 389-6519

LUCCI & ASSOCIATES, INC. reserve their commonlaw copyright and other property rights in these plans. These plans and drawings are not to be reproduced, changed, or copied in any form or manner whatsoever without first obtaining the expressed written permission and consent of LUCCI & ASSOC. INC nor are they to be assigned to any third party without obtaining said written permission and consent.

STAMPS/SEALS

REGISTERED PROFESSIONAL ENGINEER
KENNETH W. LUCCI
No. E 8340
Exp. 09/30/2026
ELECTRICAL
STATE OF CALIFORNIA

LICENSED ARCHITECT
WILLIAM JORGE AMADOR
C-20348
JANUARY 31, 2022
RENEWAL DATE
STATE OF CALIFORNIA

DSA V3 SUBMITTAL 03/21/2025

SHEET TITLE:

MECHANICAL POWER PLAN, NOTES & SCHEDULE

PROJECT NO: 22-VCCCD-08	PROJECT ARCH: Designer
DRAWN: LK/DS/IT	CHECKED: KL
SHEET NUMBER: E420	
DATE: 12/20/24	SHEET: ___ OF ___

Copyright Lucci and Associates Consulting Electrical Engineers. Deviations from this drawing will not be made without their expressed written permission.

L.A.I.# 22-539 PAPER SIZE 42"x30"

DRAFTER: CM02 DRAWING FILENAME: 22-539E420 PATHNAME: G:\22\539\ELI\Sheets DATE: 20 December 2024 TIME: 3:33 pm

PROJECT NOTES

GENERAL NOTES

1. ALL WIRE SHALL BE IN CONDUIT PER CFC 907.
2. MANUAL PULL STATIONS TO BE MOUNTED AT 48 IN. ABOVE FLOOR SURFACE TO THE TOP OF THE STATION. (DETAIL 1)
3. MOUNT AUDIO VISUAL 80 IN. ABOVE FINISHED FLOOR TO THE BOTTOM OF THE LIGHT (DETAIL 1)
4. MAINTAIN WIRING COLOR CODES.
5. ALL WIRING TO BE AS CALLED FOR IN N.E.C. ARTICLE 760 & CFC 907.
6. IDENTIFY THE FIRE ALARM CIRCUIT AT THE ELECTRICAL PANEL IN RED, PROVIDE A BREAKER LOCKON DEVICE (PANEL OT CIRCUIT 40.)
7. DEVICE TYPES AND LOCATIONS ARE SHOWN AS CALLED FOR ON THE BID DOCUMENTS.

FIRE ALARM ZONE SCHEDULE

THE NEW FIRE ALARM SYSTEM IS A FCI E3 ADDRESSABLE TYPE. EACH INITIATING DEVICE IS ANNUNCIATED AS A UNIQUE ADDRESS OR ZONE AT THE PANEL AND ANNUNCIATOR.

F.A. RACEWAY SIZING

MINIMUM CONDUIT SIZE SHALL BE 3/4" DIAMETER AND SHALL NOT EXCEED 40% FILL.

LOAD = 3.75 W

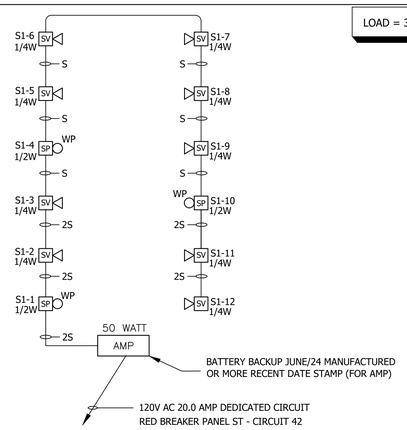

SPEAKER SYSTEM 1

SCALE: NONE - E500

REQUIRED NOTES

THE FIRE ALARM SYSTEM SHALL CONFORM TO ARTICLE 760 OF THE CALIFORNIA ELECTRIC CODE.

INSTALLATION OF THE FIRE ALARM SYSTEM SHALL NOT BE STARTED UNTIL DETAILED PLANS AND SPECIFICATIONS. INCLUDING CALIFORNIA STATE FIRE MARSHAL LISTING NUMBERS FOR EACH COMPONENT OF THE SYSTEM HAVE BEEN APPROVED BY THE CALIFORNIA DEPT. OF THE STATE ARCHITECT'S FIRE MARSHAL.

UPON COMPLETION OF THE INSTALLATION OF THE FIRE ALARM SYSTEM A SATISFACTORY TEST OF THE SYSTEM SHALL BE MADE IN THE PRESENCE OF THE FIRE MARSHAL, OWNER AND ENGINEER OF RECORD.

A MINIMUM OF 48 HOURS NOTICE SHALL BE REQUIRED FOR ANY INSPECTION AND/OR TESTING.

ALL DEVICES OF THE FIRE ALARM SYSTEM SHALL BE APPROVED AND LISTED BY THE CALIFORNIA STATE FIRE MARSHAL.

A STAMPED SET OF APPROVED FIRE ALARM PLANS SHALL BE ON THE JOB SITE AND USED FOR INSTALLATION. ANY DEVIATION FROM APPROVED PLANS, INCLUDING THE SUBSTITUTION OF DEVICES SHALL BE APPROVED BY THE FIRE MARSHAL.

ANY DISCREPANCIES BETWEEN THE DRAWINGS AND THE CODE, OR RECOGNIZED STANDARDS SHALL BE BROUGHT TO THE ATTENTION OF THE INSPECTOR OF RECORD.

A CERTIFICATE OF COMPLIANCE SHALL BE PREPARED BY THE INSTALLER AND GIVEN TO THE FIRE MARSHAL UPON COMPLETION OF THE INSTALLATION.

COMPLETE THE NFPA 72 RECORD OF COMPLETION, TESTING ALL DEVICES AND APPLIANCES. PROVIDE A COPY OF THE COMPLETED RECORD OF COMPLETION TO THE OWNER (SCHOOL DISTRICT), ARCHITECT, LOCAL FIRE AUTHORITY AND DSA VIA THE PROJECT INSPECTOR.

MOUNTING HEIGHT DETAIL

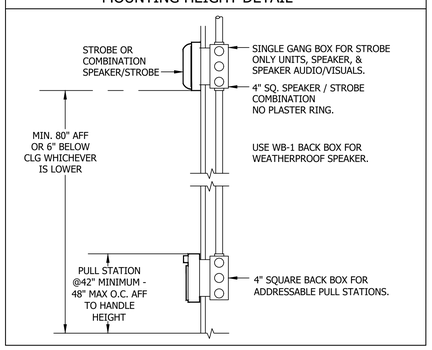

SCOPE OF WORK

PROVIDE A STAND ALONE FIRE ALARM SYSTEM TO ACCOMMODATE NEW STRUCTURE. PER CFC 907.2.2.2.

NEW FIRE ALARM SYSTEM WILL INCLUDE MANUAL AND AUTOMATIC DETECTION AND VOICE EVACUATION.

NEW FIRE ALARM SYSTEM WILL BY MONITORED BY A UL LISTED CENTRAL STATION PER CFC 907.6.6 AND UTILIZE ALTERNATE MEANS OF COMMUNICATIONS PER NFPA 72 CHAPTER 26

PROJECT DATA

APPLICABLE CODES:

A. 2022 CALIFORNIA BUILDING CODE (CBC)
B. 2022 CALIFORNIA ELECTRICAL CODE (CEC)
C. 2022 CALIFORNIA MECHANICAL CODE (CMC)
D. 2022 CALIFORNIA PLUMBING CODE (CPC)
E. 2022 CALIFORNIA FIRE CODE (CFC), PART 9, TITLE 24, C.C.R.;
F. TITLE 19, CCD, PUBLIC SAFETY, STATE FIRE MARSHAL REGULATIONS
G. NFPA 72-2022 EDITION
H. CAL/OSHA CONSTRUCTION SAFETY ORDERS
J. ADA, ADAAG, ARS, TITLE 24, CHAPTER 11

BUILDING CLASSIFICATION:

A. OCCUPANCY TYPE: B
B. OCCUPANCY LOAD: -
C. CONSTRUCTION TYPE: -
D. FIRE SPRINKLERS: NO

AGENCIES: DSA

DSA REQUIRED NOTES

1. APPLICABLE STANDARD 2022 NFPA 72
2. INSTALLATION OF THE SYSTEMS SHALL NOT BE STARTED UNTIL DETAILED DESIGN DOCUMENTS AND SPECIFICATION, INCLUDING STATE FIRE MARSHAL LISTING NUMBERS FOR EACH COMPONENT OF THE SYSTEM HAS BEEN APPROVED BY DSA.
3. UPON COMPLETION OF THE INSTALLATION OF THE SYSTEMS, A SATISFACTORY TEST OF THE ENTIRE SYSTEM SHALL BE MADE IN THE PRESENCE OF A DSA PROJECT INSPECTOR.
4. A STAMPED SET OF APPROVED FIRE ALARM DESIGN DOCUMENTS SHALL BE ON THE JOB SITE AND USED FOR INSTALLATION.
5. ANY DISCREPANCIES BETWEEN THE DRAWINGS AND THE CODE OR RECOGNIZED STANDARDS SHALL BE BROUGHT TO THE ATTENTION OF DSA AND THE ARCHITECT/ENGINEER OF THE PROJECT.
6. DSA, ARCHITECT/ENGINEER AND OWNER SHALL BE NOTIFIED A MINIMUM OF 48 HOURS PRIOR TO THE FINAL INSPECTION AND/OR TESTING.
7. ALL PENETRATIONS THROUGH RATED ASSEMBLIES, REQUIRING OPENING PROTECTION SHALL BE PROVIDED WITH A PENETRATION FIRE STOP SYSTEM AS IDENTIFIED IN CBC CHAPTER 7, UL OR OTHER LAB TESTING CRITERIA. APPROVED TYPE OF MATERIALS SHALL BE IDENTIFIED WITHIN THE SPECIFICATION WITHIN THE FIRE ALARM SECTION.
8. WALL MOUNTED VISUAL NOTIFICATION DEVICES SHALL HAVE THEIR BOTTOMS MOUNTED AT 80" MINIMUM AND 96" MAXIMUM FROM FINISHED FLOOR.
9. WALL MOUNTED AUDIBLE NOTIFICATION DEVICES SHALL HAVE THEIR TOPS MOUNTED AT 90" MINIMUM AND 100" MAXIMUM FROM FINISHED FLOOR AND NO CLOSER THAN 6" TO A HORIZONTAL STRUCTURE.
10. AUDIBLE DEVICES TO BE AT LEAST 15 DBA ABOVE THE AVERAGE AMBIENT SOUND LEVEL BUT NOT LESS THAN 75 DBA AT 10 FEET OR MORE THAN 110 DBA AT THE MINIMUM HEARING DISTANCE. SOUND LEVEL SHALL BE MAINTAINED FOR DURATION OF AT LEAST 60 SECTIONS 5 DBA MUST BE MAINTAINED.
11. THE CONTRACTOR SHALL ADJUST/INSTALL ALL DEVICES TO MAXIMIZE PERFORMANCE AND TO MINIMIZE FALSE ALARMS.
12. VISUAL DEVICES SHOULD NOT EXCEED 2 FLASHES PER SECOND AND SHOULD NOT BE SLOWER THAN 1 FLASH EVERY SECOND. THE DEVICE SHALL HAVE A PULSING LIGHT SOURCE NOT LESS THAN 15 CANDELA. VISUAL DEVICES WITHIN 55' FROM EACH OTHER SHALL BE SYNCHRONIZED.
13. UNDERGROUND AND EXTERIOR CONDUITS TO HAVE WATERTIGHT FITTINGS AND WIRE TO BE APPROVAL FOR WET LOCATIONS.
14. ALL FIRE ALARM WIRING SHALL BE FLP OR FPLP (FIRE POWER LIMITED OR FIRE POWER LIMITED PLENUM) AS REQUIRED FOR APPLICATION. WIRING IN CONDUIT ABOVE GROUND MAY BE THHN OR THWN.
15. PER CEC STANDARDS, ALL WIRING IS TO BE PULLED THROUGH EACH JUNCTION BOX AND CONNECTED DIRECTLY TO EACH FIRE DEVICE. DO NOT SPLICE THE WIRE IN UNDERGROUND LOCATIONS. THERE MUST BE AT LEAST 6' OF LEAD WIRE FROM THE BOX TO THE DEVICE. ALL BOXES TO BE SIZED PER CEC.
16. SMOKE DETECTORS SHALL NOT BE ANY CLOSER THAN 1' FROM FIRE SPRINKLERS OR 3' FROM ANY SUPPLY DIFFUSER. IN AREA OF CONSTRUCTION OR POSSIBLE DAMAGE/CONTAMINATION ON NEWLY INSTALLED FIRE ALARM DEVICES SHALL BE COVERED UNTIL THAT AREA IS READY TO BE TURNED OVER TO THE OWNER.
17. ALL FIRE ALARM CIRCUITS SHALL BE IN CONDUIT, SURFACE RACEWAY OR OPEN RUN ABOVE CEILINGS, UNDER FLOORS AND IN WALLS IN A NEAT AND PROTECTED MANOR AS INDICATED ON DESIGN DOCUMENTS. EXPOSED CIRCUITS ARE ONLY PERMITTED WHEN NOTED AS EXPOSED ON DESIGN DOCUMENTS.
18. FIRE ALARM PANEL, REMOTES, AND COMPONENTS SHALL BE SECURED TO MOUNTING SURFACES PER MANUFACTURERS SPECIFICATIONS. NO SINGLE DEVICE SHALL EXCEED THE WEIGHT OF 20 LBS. WITHOUT SPECIAL MOUNTING DETAILS.
19. A DEDICATED BRANCH CIRCUIT SHALL BE PROVIDED FOR FIRE ALARM EQUIPMENT. THIS CIRCUIT SHALL BE ENERGIZED FROM THE COMMON USE AREA PANEL AND SHALL HAVE NO OTHER OUTLETS. THE BREAKER SHALL HAVE A RED LOCKING DEVICE TO BLOCK THE HANDLE IN THE "ON" POSITION. THE CIRCUIT BREAKER SHALL BE LABELED "FIRE ALARM CIRCUIT CONTROL". CIRCUIT ID TO BE LABELED AT FIRE PANEL/EXTENDERS.
20. THE INSTALLING CONTRACTOR SHALL PROVIDE A RECORD OF COMPLETION PER NFPA 72, FIGURE 10.18.2.1.1.
21. CONTROL PANELS, REMOTE ANNUNCIATORS SHALL BE INSTALLED WITH THEIR BOTTOMS MOUNTED AT 48".
22. THE INSTALLING CONTRACTOR SHALL PROVIDE SYSTEM PROGRAMMING FOR SUPERVISORY MONITORING PER CBC SECTION 901.6.2.
23. SUPERVISORY MONITORING SHALL BE TESTED AND VERIFIED AS SENDING CORRECT SIGNALS IN CONJUNCTION WITH FINAL ACCEPTANCE TEST.
24. OWNER SHALL BE RESPONSIBLE FOR ESTABLISHING A FIRE SYSTEM MONITORING CONTRACT OR PROVISIONS.

ALL DEVICES ARE NEW, NO RECORD DRAWINGS NEEDED

EVACS LEGEND

SYMBOL	DESCRIPTION	MODEL #	C.S.F.M. #	BACK BOX REQUIREMENTS
FACP	FIRE ALARM CONTROL PANEL W/ EVACS *	GAMEWELL-FCI E3	7165-1703:0125	SURFACE MOUNT
DOC	FIRE ALARM DOCUMENT BOX	SPACE AGE	-	SURFACE MOUNT
P	MANUAL PULL STATION	GAMEWELL-FCI MS-7AF	7160-1703:0170	SINGLE GANG BOX
SD	SMOKE DETECTOR W/ BASE	GAMEWELL-FCI ASD-LS3	7272-1703:0504	4" SQ. BOX W/ 3" ROUND RING
H	HEAT DETECTOR W/ BASE	GAMEWELL-FCI ATD-L3H	7272-1703:0502	4" SQ. BOX W/ 3" ROUND RING
SV	SPEAKER/STROBE COMBO, WALL MOUNT	SYSTEM SENSOR SPSRL	7320-1653:0505	4" SQ. DEEP BOX
WP SP	OUTDOOR SPEAKER, RED	SYSTEM SENSOR SPRK	7320-1653:0201	4" SQ. BOX W/ 3" ROUND RING
ADM	ADDRESSABLE MODULE	HONEY WELL AOM-2RF	7300-1703:0102	4" SQ. DEEP BOX

* INCLUDES:
- AOM TELF
- ASM-16
- INI VGE UTP
- INI 7100 UTP
- VOICE PAGING MICROPHONE ASSEMBLY
- LCD NGA ANNUNCIATOR
- FIRE FIGHTERS HANDSET

DATA SHEETS & CSFM SHEETS ARE PROVIDED IN E500 SERIES SHEETS

WIRE CHART

SYMBOL	CIRCUIT DESCRIPTION	CONDUCTOR COLOR	WIRE IN CONDUIT	NO CONDUIT NO PLENUM	NO CONDUIT IN PLENUM	UNDERGROUND / WET SYMBOL	WIRE IN CONDUIT UNDERGROUND/WET	CLASS
SBUS	SBUS COMM CIRCUIT - POWER	YELLOW / BLUE	2 CONDUCTOR 2/14 STRANDED TYPE THHN	2 CONDUCTOR 2/14 FPLR SOLID OR STRANDED TWISTED/ UNSHIELDED	2 CONDUCTOR 2/14 FPLP SOLID OR STRANDED TWISTED/ UNSHIELDED	SBUSU	2 CONDUCTOR 2/14 TYPE THWN	B
	SBUS COMM CIRCUIT - DATA	RED / BLACK	2 CONDUCTOR 2/18 FPL SOLID TWISTED/ SHIELDED	2 CONDUCTOR 2/18 FPLR SOLID TWISTED/ SHIELDED	2 CONDUCTOR 2/18 FPLP SOLID TWISTED/ SHIELDED		2 CONDUCTOR 2/16 FPL STRANDED TWISTED/ SHIELDED WEST PENN#AQ294	B
Z	SIGNAL LINE CIRCUIT (SLC)	RED / BLACK	2 CONDUCTOR 2/16 FPL SOLID TWISTED/UNSHIELDED	2 CONDUCTOR 2/16 FPLR SOLID TWISTED/UNSHIELDED	2 CONDUCTOR 2/16 FPLP SOLID TWISTED/UNSHIELDED	ZU	2 CONDUCTOR 2/16 FPL STRANDED TWISTED/ SHIELDED WEST PENN#AQ225	B
V	VISUAL APPLIANCE CIRCUIT	YELLOW / BLIE RED / BLACK ORANGE / BROWN	2 CONDUCTOR 2/12 STRANDED TYPE THHN	2 CONDUCTOR 2/12 FPLR SOLID TWISTED/UNSHIELDED	2 CONDUCTOR 2/12 FPLP SOLID TWISTED/UNSHIELDED	VU	2 CONDUCTOR 2/12 STRANDED TYPE THWN	B
S	SPEAKER APPLIANCE CIRCUIT	RED / BLACK	2 CONDUCTOR 2/16 FPL STRANDED TWISTED/ SHIELDED	2 CONDUCTOR 2/16 FPLR STRANDED TWISTED/ SHIELDED	2 CONDUCTOR 2/16 FPLP STRANDED TWISTED/ SHIELDED	SU	2 CONDUCTOR 2/16 FPL STRANDED TWISTED/ SHIELDED WEST PENN#AQ294	B
Y	HANDSET/COM CIRCUIT	RED/BLACK/ BROWN/BLUE	2 PAIR 2/16 FPC TWISTED/UNSHIELDED	2 PAIR 2/16 FPC TWISTED/UNSHIELDED	2 PAIR 2/16 FPC TWISTED/UNSHIELDED	SU	2 PAIR 16/4 FPC TWISTED/UNSHIELDED WEST PENN#AQ245	B

FIRE ALARM OUTPUTS / FIRE ALARM INPUTS

CONTROL MATRIX	CONTROL UNIT ANNUNCIATION						NOTIFICATION									REQUIRED FIRE SAFETY CONTROL							
	ACTUATE COMMON ALARM SIGNAL INDICATOR	ACTUATE AUDIBLE ALARM SIGNAL	ACTUATE COMMON SUPERVISORY SIGNAL INDICATOR	ACTUATE COMMON SUPERVISORY SIGNAL	ACTUATE COMMON TROUBLE SIGNAL INDICATOR	ACTUATE COMMON TROUBLE SIGNAL	DISPLAY CHANGE OF STATUS MESSAGE ON LCD DISPLAY	DISPLAY MESSAGE ON LCD DISPLAY	TRANSMIT FIRE ALARM SIGNAL TO SUPERVISING STATION	TRANSMIT SUPERVISORY SIGNAL TO SUPERVISING STATION	TRANSMIT TROUBLE SIGNAL TO SUPERVISING STATION	TRANSMIT CARBON MONOXIDE DETECTOR SUPERVISORY SIGNAL	ACTIVATE 120VAC SPRINKLER BELL	ACTIVATE INTELLIGENT VOICE EVACUATION	NOT USED	ACTIVATE MANUAL OVER RIDE OF SPEAKERS "ALL CALL"	NOT USED	SYSTEM WILL BE 100% OPERATIONAL ON BATTERY BACK UP	NOT USED	NOT USED	NOT USED	NOT USED	NOT USED	NOT USED
MANUAL PULL STATION	●	●					●	●	●					●										
AREA HEAT DETECTOR	●	●					●	●	●					●										
MICROPHONE KEY																●								
FIRE ALARM SYSTEM AC POWER FAIL					●	●	●	●			●							●						
FIRE ALARM SYSTEM LOW BATTERY					●	●	●	●			●													
FIRE ALARM AMPLIFIER AC POWER FAIL					●	●	●	●			●							●						
FIRE ALARM AMPLIFIER SYSTEM LOW BATTERY					●	●	●	●			●													
GROUND FAULT					●	●	●	●			●													
SIGNAL LINE "SHORT"					●	●	●	●			●													
NOTIFICATION "OPEN" CIRCUIT					●	●	●	●			●													

FIRE ALARM ADDRESSABLE DEVICE IDENTIFICATION KEY

D-15 (IDENTIFICATION MATCHES ACTUAL LED DISPLAY IN "FACP" OR "ANN")

- 1 OR 2 DIGIT NUMBER OF ADDRESSABLE DEVICE
- "D" DESIGNATED ADDRESSABLE "DEVICE","H"FOR HEAT, "SD"FOR SMOKE DETECTOR,"P" PULL STATION, "CO" FOR CARBON MONOXIDE, "V" FOR STROBE, "S" FOR SPEAKER

FIRE ALARM N.A.C. DEVICE NUMBERING KEY

H-5

- NUMBER OF DEVICE IN CIRCUIT.
- NOTIFICATION APPLIANCE CIRCUIT TYPE (S=SPEAKER, V=VISUAL)

DIVISION OF THE STATE ARCHITECT

IDENTIFICATION STAMP DIV. OF THE STATE ARCHITECT
APP: 03-124589 INC:
REVIEWED FOR
SS ☑ FLS ☑ ACS ☑
DATE: 04/15/2025

VENTURA COUNTY COMMUNITY COLLEGE DISTRICT
761 EAST DAILY DRIVE
CAMARILLO, CALIFORNIA 93010
TEL: (805) 652-5500

PROJECT TITLE AND SCHOOL LOCATION

VENTURA COMMUNITY COLLEGE STEM MODULAR BUILDING
VENTURA COMMUNITY COLLEGE
4667 TELEGRAPH RD.
VENTURA, CA 93003

COMMISSIONED ARCHITECT

AMADOR
amador whittle architects, inc.
28328 AGOURA RD, 203 | AGOURA HILLS CA. 91301 | 805-558-4334

CONSULTANT

LUCCI & ASSOCIATES INC.
CONSULTING ELECTRICAL ENGINEERS
3251 CORTE MALPASO, #511
CAMARILLO, CA 93012-8094
(805) 389-6520 FAX (805) 389-6519

LUCCI & ASSOCIATES, INC. reserve their commonlaw copyright and other property rights in these plans. These plans and drawings are not to be reproduced, changed, or copied in any form or manner whatsoever without first obtaining the expressed written permission and consent of LUCCI & ASSOC. INC nor are they to be assigned to any third party without obtaining said written permission and consent.

STAMPS/SEALS

REGISTERED PROFESSIONAL ENGINEER KENNETH W. KLEE NO. E 8340 Exp. 09/30/2026 ELECTRICAL STATE OF CALIFORNIA

LICENSED ARCHITECT WILLIAM JORGE AMADOR C-20348 JANUARY 31, 2027 RENEWAL DATE STATE OF CALIFORNIA

DSA V3 SUBMITTAL 03/21/2025

SHEET TITLE:

FIRE ALARM NOTES & SCHEDULE

PROJECT NO: 22-VCCCD-08 | PROJECT ARCH: Designer
DRAWN: LK/DS/IT | CHECKED: KL
SHEET NUMBER:

E500

DATE: 12/20/24 | SHEET: ___ OF ___

Copyright Lucci and Associates Consulting Electrical Engineers. Deviations from this drawing will not be made without their expressed written permission.

L.A.I.# 22-539 PAPER SIZE 42"x30"

DRAFTER: CM02 DRAWING FILENAME: 22-539E500 PATHNAME: G:\22\539\ELS\Sheets DATE: 20 December 2024 TIME: 3:33 pm

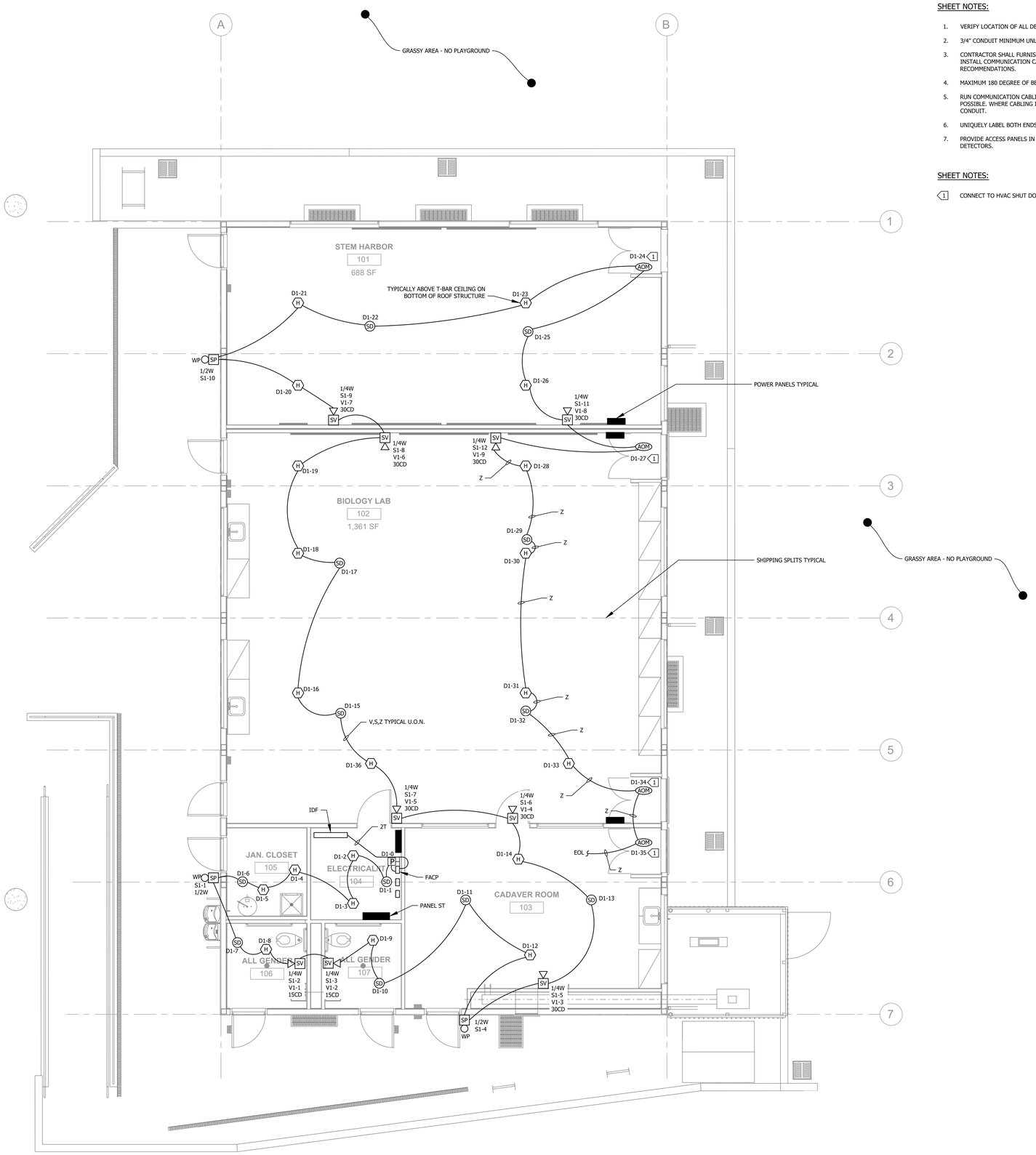

SHEET NOTES:

1. VERIFY LOCATION OF ALL DEVICES ON ARCHITECTURAL PLANS.
2. 3/4" CONDUIT MINIMUM UNLESS OTHERWISE NOTED.
3. CONTRACTOR SHALL FURNISH AND INSTALL PULL BOXES AS REQUIRED TO INSTALL COMMUNICATION CABLING PER CABLE MANUFACTURERS RECOMMENDATIONS.
4. MAXIMUM 180 DEGREE OF BEND BETWEEN PULL POINTS.
5. RUN COMMUNICATION CABLING IN CABLE TRAY TO MAXIMUM EXTENT POSSIBLE. WHERE CABLING IS NOT IN CABLE TRAY, CABLE SHALL BE IN CONDUIT.
6. UNIQUELY LABEL BOTH ENDS OF ALL CABLING.
7. PROVIDE ACCESS PANELS IN HARD LID CEILING TO ACCESS HEAT DETECTORS.

SHEET NOTES:

1 CONNECT TO HVAC SHUT DOWN MODULE.

SCALE: 1/4"=1'-0"
0 2' 4' 8'

FIRE ALARM PLAN 1 - E501
SCALE: 1/4"=1'-0"

N

DIVISION OF THE STATE ARCHITECT

IDENTIFICATION STAMP
DIV. OF THE STATE ARCHITECT
APP: 03-124589 INC:
REVIEWED FOR
SS ☑ FLS ☑ ACS ☑
DATE: 04/15/2025

VENTURA COUNTY COMMUNITY COLLEGE DISTRICT
761 EAST DAILY DRIVE
CAMARILLO, CALIFORNIA 93010
TEL: (805) 652-5500

PROJECT TITLE AND SCHOOL LOCATION

VENTURA COMMUNITY COLLEGE STEM MODULAR BUILDING

VENTURA COMMUNITY COLLEGE
4667 TELEGRAPH RD.
VENTURA, CA 93003

COMMISSIONED ARCHITECT

AMADOR

amador whittle architects, inc.
28328 AGOURA RD, 203 | AGOURA HILLS CA. 91301 | 805-558-4334

CONSULTANT

LUCCI & ASSOCIATES INC.
CONSULTING ELECTRICAL ENGINEERS
3251 CORTE MALPASO, #511
CAMARILLO, CA 93012-8094
(805) 389-6520 FAX (805) 389-6519

LUCCI & ASSOCIATES, INC. reserve their commonlaw copyright and other property rights in these plans. These plans and drawings are not to be reproduced, changed, or copied in any form or manner whatsoever without first obtaining the expressed written permission and consent of LUCCI & ASSOC. INC nor are they to be assigned to any third party without obtaining said written permission and consent.

STAMPS/SEALS

REGISTERED PROFESSIONAL ENGINEER
KENNETH W. KLEIN
NO. E 8340
EXP. 09/30/2026
ELECTRICAL
STATE OF CALIFORNIA

LICENSED ARCHITECT
WILLIAM JORGE AMADOR
C-20348
JANUARY 31, 2027
RENEWAL DATE
STATE OF CALIFORNIA

DSA V3 SUBMITTAL 03/21/2025

SHEET TITLE:

FIRE ALARM PLAN

PROJECT NO: 22-VCCCD-08	PROJECT ARCH: Designer
DRAWN: LK/DS/IT	CHECKED: KL
SHEET NUMBER:	

E501

DATE: 12/20/24	SHEET: ___ OF ___

Copyright Lucci and Associates Consulting Electrical Engineers. Deviations from this drawing will not be made without their expressed written permission.

L.A.I.# 22-539 PAPER SIZE 42"x30"

DRAFTER: CM02 DRAWING FILENAME: 22-539E501 PATHNAME: G:\22\539\ELI\Sheets DATE: 20 December 2024 TIME: 3:33 pm

Drafter:CM02 Paper Size:12.0
Drawing:G:\22\539\ELI\Sheets\22-539E501.dwg
Date:Aug 12, 2023
Time:10:25 AM
XREF:G:\22\539\ELI\Xrefs\22-539TB.dwg
XREF:G:\22\539\ARCH\Backgrounds\22-539-Backgrounds-Sheet - A111 - FLOOR PLAN.dwg
XREF:G:\22\539\ARCH\Backgrounds\22-539-Backgrounds-Sheet - A111 - FLOOR PLAN.dwg
Drafter: CM01 : G:\22\539\ELI\Sheets\22-539E501.dwg : DATE: AUG 12, 2023 TIME: 10:25 AM

MOUNTING HEIGHT OVER OBSTRUCTION

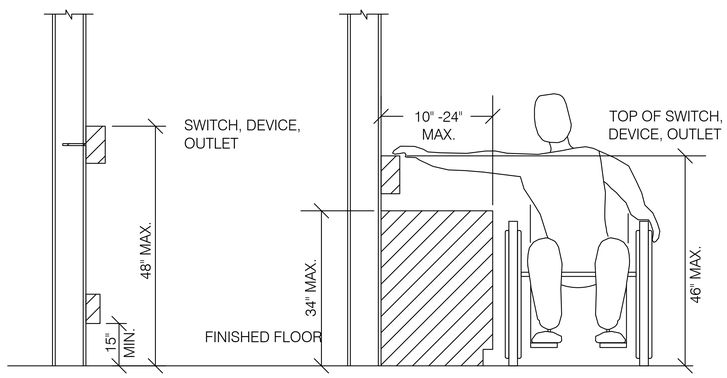

SILENT KNIGHT MONITOR MODULE WIRING DETAIL

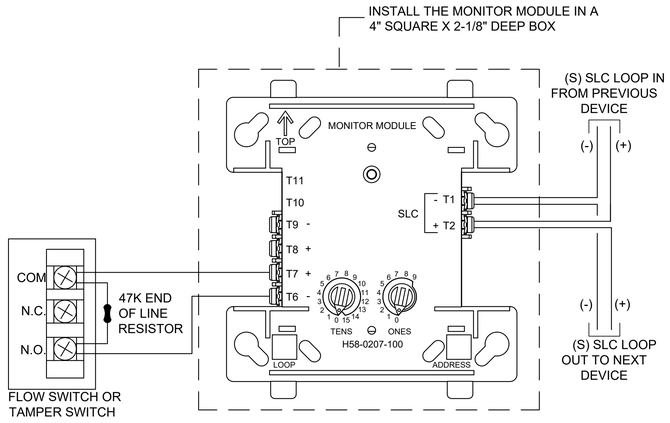

CELLULAR COMMUNICATOR WIRING DETAIL

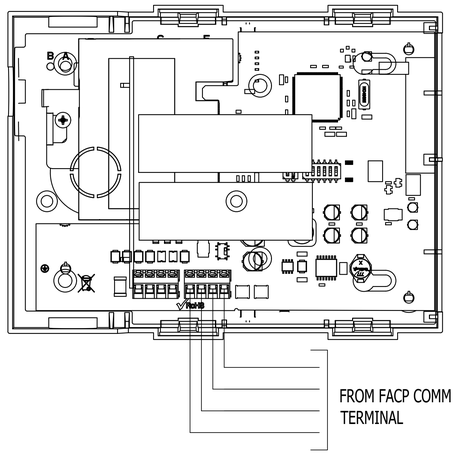

SYSTEM SENSOR HORN STROBE WIRING DETAIL

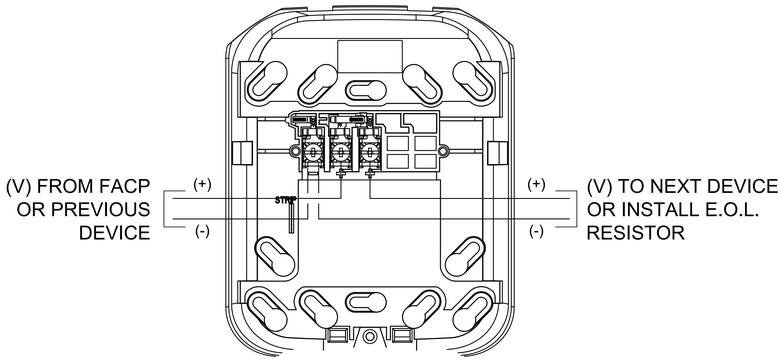

SYSTEM SENSOR SPEAKER/STROBE WIRING DETAIL

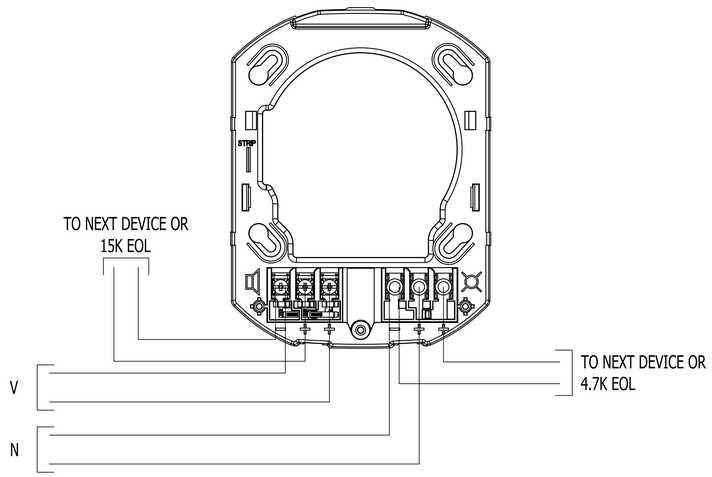

ANNUNCIATOR WIRING DETAIL

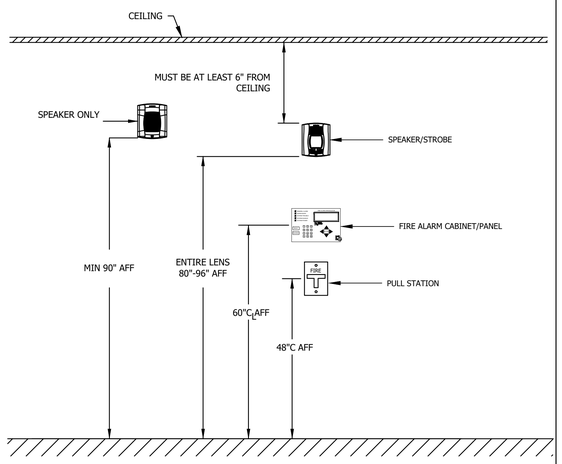

SILENT KNIGHT DETECTOR WIRING DETAIL

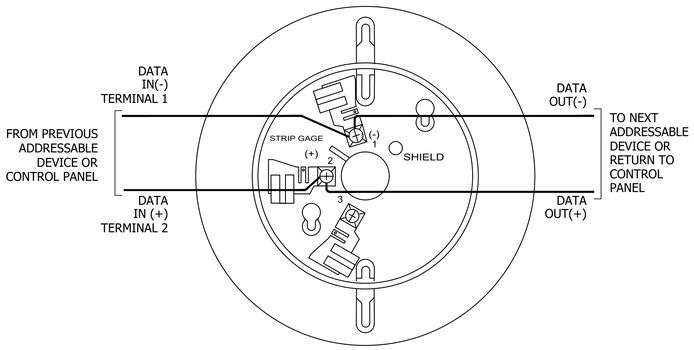

SMOKE DETECTOR MOUNTING DETAIL

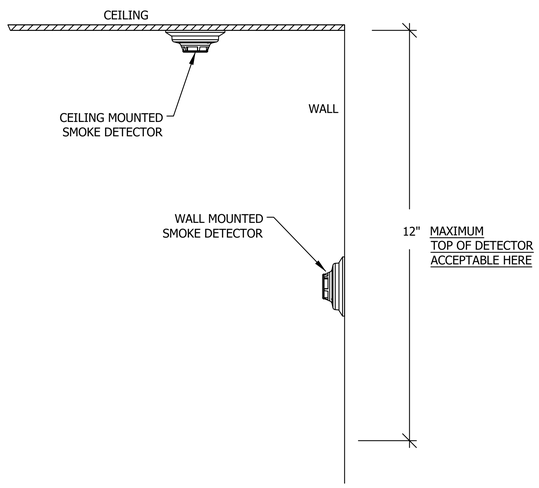

MOUNTING HEIGHT & ROUGH-IN DETAIL

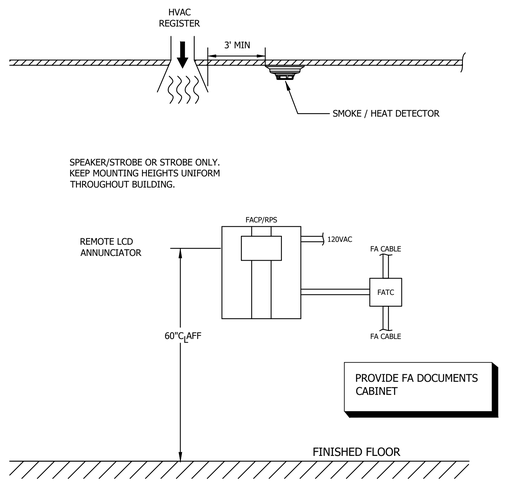

DIVISION OF THE STATE ARCHITECT

IDENTIFICATION STAMP
DIV. OF THE STATE ARCHITECT
APP: 03-124589 INC:
REVIEWED FOR
SS ☑ FLS ☑ ACS ☑
DATE: 04/15/2025

VENTURA COUNTY COMMUNITY COLLEGE DISTRICT
761 EAST DAILY DRIVE
CAMARILLO, CALIFORNIA 93010
TEL: (805) 652-5500

PROJECT TITLE AND SCHOOL LOCATION

VENTURA COMMUNITY COLLEGE STEM MODULAR BUILDING
VENTURA COMMUNITY COLLEGE
4667 TELEGRAPH RD.
VENTURA, CA 93003

COMMISSIONED ARCHITECT

AMADOR
amador whittle architects, inc.
28328 AGOURA RD, 203 | AGOURA HILLS CA, 91301 | 805-558-4334

CONSULTANT

LUCCI & ASSOCIATES INC.
CONSULTING ELECTRICAL ENGINEERS
3251 CORTE MALPASO, #611
CAMARILLO, CA 93012-8094
(805) 389-6520 FAX (805) 389-6519

LUCCI & ASSOCIATES, INC. reserve their commonlaw copyright and other property rights in these plans. These plans and drawings are not to be reproduced, changed, or copied in any form or manner whatsoever without first obtaining the expressed written permission and consent of LUCCI & ASSOC. INC nor are they to be assigned to any third party without obtaining said written permission and consent.

STAMPS/SEALS

REGISTERED PROFESSIONAL ENGINEER
KENNETH W. KLEIN
NO. E 8340
Exp. 09/30/2026
ELECTRICAL
STATE OF CALIFORNIA

LICENSED ARCHITECT
WILLIAM JORGE AMADOR
C-20348
JANUARY 31, 2027
RENEWAL DATE
STATE OF CALIFORNIA

DSA V3 SUBMITTAL 03/21/2025

SHEET TITLE:

FIRE ALARM DETAIL SHEET

PROJECT NO.: 22-VCCCD-08	PROJECT ARCH: Designer
DRAWN: LK/DS/IT	CHECKED: KL
SHEET NUMBER:	

E502

DATE: 12/20/24 SHEET: ___ OF ___

Copyright Lucci and Associates Consulting Electrical Engineers. Deviations from this drawing will not be made without their expressed written permission.

L.A.I.# 22-539 PAPER SIZE 42"x30"

DRAFTER: CM02 DRAWING FILENAME: 22-539E502 PATHNAME: G:\22\539\EL\Sheets DATE: 20 December 2024 TIME: 3:33 pm

CALIFORNIA DEPARTMENT OF FORESTRY & FIRE PROTECTION
OFFICE OF THE STATE FIRE MARSHAL
FIRE ENGINEERING - BUILDING MATERIALS LISTING PROGRAM

LISTING SERVICE

LISTING No. 7150-1703:0170 Page 1 of 1

CATEGORY: 7150 -- FIRE ALARM PULL BOXES

LISTEE: GAMEWELL-FCI12 Clintonville Road, Northford, CT 06472
Contact: Lisa Brant (203) 484-6105 Fax (203) 484-7309
Email: lisa.brant@honeywell.com

DESIGN: Model MS-7ASF fire alarm single action pull station and MS-7LR*, MS-7LRA* fire alarm pull boxes intended for agent releasing device. Refer to listee's data sheet for detailed product description and operational considerations.

INSTALLATION: In accordance with listee's printed installation instructions, applicable codes and ordinances and in a manner acceptable to the authority having jurisdiction.

MARKING: Listee's name, model number, rating, and UL label.

APPROVAL: Listed as fire alarm pull boxes for use with separately listed compatible fire alarm control units. Refer to listee's Installation Instruction Manual for details.

* These manual pull boxes meet the requirements of UL Standard 38, 1999 Edition and California amendments.

XLF: 7150-0028:0199

*Updated 09-17-09 fm

This listing is based upon technical data submitted by the applicant. CSFM Fire Engineering staff has reviewed the test results and/or other data but does not make an independent verification of any claims. This listing is not an endorsement or recommendation of the item listed. This listing should not be used to verify correct operational requirements or installation criteria. Refer to listee's data sheet, installation instructions and/or other

Date Issued: **July 01, 2022** *Listing Expires* **June 30, 2023**

Authorized By: ***VICTOR WONG**, Program Coordinator*
Fire Engineering Division

FIRE CONTROL INSTRUMENTS
WWW.FIRECONTROLINSTRUMENTS.COM

MS-7

NON-CODED MANUAL
FIRE ALARM STATIONS

Description

The MS-7 Series Manual Fire Alarm Stations are available in a wide variety of configurations. They meet the requirement of the Americans with Disabilities Act (ADA) of a 5-lb maximum pull force to activate. Operating instructions are molded into the handle along with Braille text. All stations have a key lock/reset which is keyed alike with FCI fire alarm control panels and manual fire alarm stations.

MS-7A Addressable Station

The MS-7A Addressable Station is a double action station designed for installation in the signaling line circuit of any FCI analog addressable control panel. Activation of the station causes its assigned address to register at the control panel. The signaling line circuits of FCI analog addressable panels are designed to accommodate up to 98 addressable stations per circuit.

The door contains an LED which flashes red in normal condition and lights steadily when the station has been activated. The station features screw terminals.

MS-7 Double Action Station

The MS-7 double action station is intended for use with conventional fire alarm control panels. It features a set of single pole contacts and screw terminals for connection to an initiating circuit.

MS-7S Single Action Station

The MS-7S single action station is intended for use with conventional fire alarm control panels. It features a set of single pole contacts and wire leads for connection to an initiating circuit.

MS-7SP Double Action Station

The MS-7SP is a double action station similar to the MS-7 station, with the additional feature of both English and Spanish instructions molded into the unit.

MS-7LOB Double Action Station
(Listed for Outdoor Applications)

The MS-7LOB station must be mounted on a Model WBB backbox. In retrofit applications, the station is UL Listed for use with the WP-10 backbox. It is intended for use with conventional control panels and has a set of single pole contacts and screw terminals.

Mounting

The MS-7 interior stations may be surface (backbox SB-10) or semi-flush mounted on a standard double-gang, or 4-inch (10.16 cm) square electrical box. An optional trim ring (BG-TR) may also be used for semi-flush mounting.

FEATURES

Addressable Versions Compatible With All FCI Analog Addressable Fire Alarm Controls

Conventional Versions Suitable for Use With any UL Listed Control Panel

Both Single and Double Action Versions

Tumbler Lock for Test and Reset Keyed Alike With FCI Controls

Surface or Semi-Flush Mounting

Shock and Vibration Resistant

Versions (MS-7LOB) Listed for Outdoor Applications

Meets ADA Pull Force Requirements

16 Southwest Park, Westwood, MA 02090 USA TEL: (781) 471-3000 FAX: (781) 471-3099

9020-0522 /Ver. 1.1

AGENCY APPROVALS

UL (Standard 38)	File S2465
CSFM	Approved
NYC-MEA	MEA 67-02-E Vol. II
Factory Mutual Research	3014708

SPECIFICATIONS

Material	Lexan
Contact Ratings	0.25 amp. @ 30 VAC/VDC (resistive)
Dimensions	5 5/8" H x 4 1/4" W x 1 1/4" D (14 x 10.1 x 3.2 cm)
Operating temperature (MS-7A)	32 to 120^0 F (0 to 49^0 C)
Relative humidity (MS-7A)	10 to 93% non-condensing
Supervisory current (MS-7A)	.00030 amp.

ORDERING INFORMATION

Part No.	Model	Description
1100-0430	MS-7	Double action station
1100-0431	MS-7A**	Addressable double action station
1100-0432	MS-7S	Single action station, wire leads
1100-0433	MS-7SP	Double action station, English and Spanish instructions
1100-0434	MS-7LOB	Double action station, outdoor use. Must use WBB Backbox
1100-0437	WBB	Back box, MS-7LOB
1100-0436	SB-10	Surface backbox
1100-0435	BG-TR	Trim ring for semi-flush mount

**For use with FCI analog addressable control panels only.

Specifications are provided for information only, are not intended to be used for installation purposes, and are believed to be accurate. However, no responsibility is assumed by Fire Control Instruments, Inc. for their use. Specifications subject to change without notice. © 2001 All Rights Reserved

DIVISION OF THE STATE ARCHITECT

IDENTIFICATION STAMP
DIV. OF THE STATE ARCHITECT
APP: 03-124589 INC:
REVIEWED FOR
SS ☑ FLS ☑ ACS ☑
DATE: 04/15/2025

VENTURA COUNTY COMMUNITY COLLEGE DISTRICT
761 EAST DAILY DRIVE
CAMARILLO, CALIFORNIA 93010
TEL: (805) 652-5500

PROJECT TITLE AND SCHOOL LOCATION

VENTURA COMMUNITY COLLEGE STEM MODULAR BUILDING
VENTURA COMMUNITY COLLEGE
4667 TELEGRAPH RD.
VENTURA, CA 93003

COMMISSIONED ARCHITECT

AMADOR
amador whittle architects, inc.
28328 AGOURA RD, 203 | AGOURA HILLS CA, 91301 | 805-558-4334

CONSULTANT

LUCCI & ASSOCIATES INC.
CONSULTING ELECTRICAL ENGINEERS
3251 CORTE MALPASO, #511
CAMARILLO, CA 93012-8094
(805) 389-6520 FAX (805) 389-6519

LUCCI & ASSOCIATES, INC. reserve their commonlaw copyright and other property rights in these plans. These plans and drawings are not to be reproduced, changed, or copied in any form or manner whatsoever without first obtaining the expressed written permission and consent of LUCCI & ASSOC. INC nor are they to be assigned to any third party without obtaining said written permission and consent.

STAMPS/SEALS

REGISTERED PROFESSIONAL ENGINEER
KENNETH W. KLEIN
NO. E 8540
Exp. 09/30/2026
ELECTRICAL
STATE OF CALIFORNIA

LICENSED ARCHITECT
WILLIAM JORGE AMADOR
C-20348
JANUARY 31, 2027
RENEWAL DATE
STATE OF CALIFORNIA

DSA V3 SUBMITTAL 03/21/2025

SHEET TITLE:

FIRE ALARM DATA SHEETS

PROJECT NO: 22-VCCCD-08	PROJECT ARCH: Designer
DRAWN: LK/DS/IT	CHECKED: KL

SHEET NUMBER:

E503

DATE: 12/20/24 SHEET: ___ OF ___

Copyright Lucci and Associates Consulting Electrical Engineers. Deviations from this drawing will not be made without their expressed written permission.

L.A.I.# 22-539 PAPER SIZE 42"x30"

DRAFTER: CM02 DRAWING FILENAME: 22-539E503 PATHNAME: G:\22\539\ELI\Sheets DATE: 20 December 2024 TIME: 3:33 pm

DATE: 20 December 2024 TIME: 3:33 pm

DRAFTER: CM02 DRAWING FILENAME: 22-539E504 PATHNAME: G:\22\539\EL\Sheets

Drafter:CM02 Paper Size: 42.00000106,30.00000007
Drawing:G:\22\539\EL\Sheets\22-539E504.dwg
Dec 20, 2024, 3:33pm
Attached XREFS:
XREF-G:\22\539\EL\Xrefs\22-539TB.dwg

CALIFORNIA DEPARTMENT OF FORESTRY & FIRE PROTECTION
OFFICE OF THE STATE FIRE MARSHAL
FIRE ENGINEERING - BUILDING MATERIALS LISTING PROGRAM

LISTING SERVICE

LISTING No. 7165-1703:0125 Page 1 of 2

CATEGORY: 7165 -- FIRE ALARM CONTROL UNIT (COMMERCIAL)

LISTEE: GAMEWELL-FCI12 Clintonville Road, Northford, CT 06472
Contact: Lisa Brant (203) 484-6105 Fax (203) 484-7309
Email: lisa.brant@honeywell.com

DESIGN: Model E3 Series® BROADBAND and E3 Series® CLASSIC Voice Evacuation System. The E3 Systems may also work in conjunction with all the sub-assemblies of listee's 7100 Series Control Panel and NetSOLO systems (CSFM Listing No. 7165-1703:0105 and 6911-1703:0116, and 6911-1703:0118).

Unit conveys all fire alarm, audio evacuation, voice paging, and fire fighter communications. Power-limited; non-coded, automatic, manual, smoke control, water flow, sprinkler supervisory, local auxiliary, central station, remote station, and proprietary service. Refer to listee's data sheet for additional detailed product description and operational considerations.

System components:
ILI-MB-E3; Intelligent Loop Interface Master Board
PM-9, PM-9G; Power Supply
ILI-95-MB-E3, ILI-95-S-E3; Loop Interface Subassemblies
E3BB-FLUSH-LCD; Enclosure for lCD-E3
E3BB-BA/-RA/-BAA/-RAA/-BB/-RB/-BC/-RC/-BD; Cabinets
RPT-E3-FO; or Repeater Sub-assembly, Fiber Optic or
RPT-E3-UTP; Repeater Sub-assembly, Unshielded twisted pair wire
LCD-E3; LCD Keypad Display
*LCD-SLP; LCD Touchscreen Display Screen
DACT-E3 sub-assembly; Digital alarm communicator transmitter
ILI-S-E3; Intelligent Loop Unit, Expansion Board
ANX-SR, ANX-MR-FO, ANX-MR-UTR; Addressable Node Expanders Sub Assembly
INCC-E; Intelligent Network Enclosure
INCC; Intelligent Network Central Command
INI-VG, INI-VGC-UTP, INI-VGC-FO, INI-VGX-UTP; Intelligent Network Interface Sub Assembly
INI-VGX-FO, INI-VGE-UTP, INI-VGE-FO; Intelligent Network Interface Sub Assembly
ASM-16; Annunciator Switch Sub Assembly
INX; Network Audio Transponder Enclosure
ANU-48; Annunciator Sub Assembly
NGA; Touch Screen LCD Display Sub Assembly
LCD-7100; Remote LCD Display
SBB-C4, SBB-D4; Backbox

*Revision 09-18-20 VWW

This listing is based upon technical data submitted by the applicant. CSFM Fire Engineering staff has reviewed the test results and/or other data but does not make an independent verification of any claims. This listing is not an endorsement or recommendation of the item listed. This listing should not be used to verify correct operational requirements or installation criteria. Refer to listee's data sheet, installation instructions and/or other

Date Issued: **July 01, 2022** *Listing Expires* **June 30, 2023**

Authorized By: ***VICTOR WONG**, Program Coordinator*

Fire Engineering Division

Listing No. 7165-1703:0125
Page 2 of 2

FCI-VDR-D4B, FCI-DR-C4B, FCI-CR-D4B; Doors with locks
AA-100, AA-120; Amplifiers
AM-50-25, AM-50-70; Amplifier Sub Assembly
CHG120; Battery Charger with Cabinet
BC-1/FCI-LBB; Backbox
IPDACT-2; IP Digital Alarm Communicator
FPJ; Firefighters's Telephone Jack Receptacle
FHS; Portable Firefighters's Telephone Handset
7100 Series#; Fire Alarm Control Panel or
INI-7100 UTP#; Intelligent Network Interface Sub-assembly, [Twisted, unshielded wire] or
INI-7100 FO#; Intelligent Network Interface

RATING: 120 V, 60 Hz, 3.5 A Primary; 24 V dc, 9A Secondary

INSTALLATION: In accordance with listee's printed installation instructions, NFPA 72, applicable codes and ordinances, and in a manner acceptable to the authority having jurisdiction.

MARKING: Listee's name, model designation, electrical rating, and UL label.

APPROVAL: Listed as fire alarm control unit for use with separately listed electrically and functionally compatible initiating and indicating devices. Suitable for high-rise applications when used with the above voice evacuation systems.

This control unit can generate a distinctive three-pulse Temporal Pattern Fire Alarm Evacuation Signal (for total evacuation) in accordance with NPFA 72.

This control unit meets the requirements of UL Standard 864, 9th Edition.

NOTE: For Fire Alarm Verification Feature (delay of alarm signaling), the Retard/Reset/Restart period shall be 30 seconds or less.

*Revision 09-18-20 VWW

This listing is based upon technical data submitted by the applicant. CSFM Fire Engineering staff has reviewed the test results and/or other data but does not make an independent verification of any claims. This listing is not an endorsement or recommendation of the item listed. This listing should not be used to verify correct operational requirements or installation criteria. Refer to listee's data sheet, installation instructions and/or other

Date Issued: **July 01, 2022** *Listing Expires* **June 30, 2023**

Authorized By: ***VICTOR WONG**, Program Coordinator*

Fire Engineering Division

E3 SERIES® FIRE ALARM CONTROL PANEL TECHNICAL SPECIFICATIONS

System
Operating Voltage: 24 VDC
Operating Temperature: Not to exceed the range of 32°-120° F (0 -49° C)
Relative Humidity: Not to exceed 93%, non-condensing at 90° F (32° C)
Primary Power Supply: 9 amps @ 55 AH capacity

Temperature and Humidity Ranges
This system meets NFPA requirements for operation at 0 – 49°C/32 – 120°F and at a relative humidity 93% ± 2% RH (noncondensing) at 32°C ± 2°C (90°F ± 3°F). However, the useful life of the system's standby batteries and the electronic components may be adversely affected by extreme temperature ranges and humidity. Therefore, it is recommended that this system and its peripherals be installed in an environment with a normal room temperature of 15 – 27°C/60 – 80°F.

Standards
The E3 Series fire alarm control panel is designed to comply with the following standards:

UL Standards
UL 864 10th Edition:
Automatic Fire Detector Alarm
Manual Fire Alarm
Waterflow Alarm
Supervisory
Releasing Device Service
Releasing/Pre-Action Deluge
Releasing/Agent Releasing
Automatic Smoke Alarm,
Non-coded and Master Coded Operation
UUKL for Smoke Control
UL 2572, 2nd Edition for Mass Notification Systems

NFPA Standards
NFPA 13 - Standard for Installation of Sprinkler Systems
NFPA 16 - Standard for Foam-Water Sprinkler and Foam Water Spray Systems
NFPA 72 - National Fire Alarm Code:
Central Station Fire Alarm Systems
Auxiliary Fire Alarm Systems
Proprietary Fire Alarm Systems
Local Fire Alarm Systems
Remote Station Fire Alarm Systems
NFPA 13 Sprinkler
NFPA 12A Halon 1301
NFPA 15 Water Spray

STANDARDS (Continued)
NFPA 16 Foam Water
NFPA 750 Water Mist
NFPA 2001 Clean Agent
NFPA 12 CO2 Carbon Dioxide
NFPA 17 Dry Chemical/17A Wet Chemical
Seismic Codes
International Building Code
IBC 2013
IBC 2009
IBC 2006
IBC 2003
IBC 2000 (Seismic)
California Building Code CBC 2007 (Seismic)

UL Standards
The E3 Series Control Panel is designed to comply with the following standards:
UL Standards: UL 864 10th Edition
UL 2572, 2nd Edition for Mass Notification

Agency Listings and Approvals
These listings and approvals apply to the modules specified in this document. In some cases, certain modules or applications may not be listed by certain approval agencies, or listing may be in process. Consult factory for latest listing status.
UL: S1869, 2572 for Mass Notification
FM: 3025415
MEA FDNY: 6175, COA #: 231-06-E
CSFM: 7165-1703:0125
City of Chicago: Class 1, Class 2, High Rise
City of Denver Approved
The VMC Group, Reference Certificate of Compliance: VMA-45894-02C (Revision 1)
ISO 9001 Certification

E3 Series®, Velociti® Series and Gamewell-FCI® are registered trademarks of Honeywell International Inc.

UL® is a registered trademark of Underwriter's Laboratories Inc.

This document is not intended to be used for installation purposes. We try to keep our product information up-to-date and accurate. We cannot cover all specific applications or anticipate all requirements. All specifications are subject to change without notice.

Country of origin: U.S.A.

Honeywell Gamewell-FCI
12 Clintonville Road
Northford, CT 06472-1610
203.484.7161
www.gamewell-fci.com

9020-0637 | T | 06/20
©2020 Honeywell International Inc.

Honeywell Gamewell FCI

E3 SERIES® FIRE ALARM CONTROL PANEL

Expandable Emergency Evacuation System

The E3 Series® fire alarm control panel is a flexible modular emergency evacuation fire system.

E3 Series with LCD-SLP Display *E3 Series with LCD-E3 Display*

GENERAL

The E3 Series® Expandable Emergency Evacuation System by Gamewell-FCI is in the forefront of the latest generation of fire alarm control panels. The E3 Series System is designed for use in virtually any application because it features a modular assembly that is configured per project requirements. Employing the new high-speed Velociti® sensors, the E3 Series provides previously unattainable polling speed and response together with the flexibility demanded by today's emergency evacuation systems. In addition to the sensors' high-speed polling rate, the Velociti Series of sensors feature bi-polar LEDs that flash green for normal polling, and light red steadily to indicate an alarm.

The E3 Series is equipped with an 80-character LCD-E3 alphanumeric LCD displayor 4.3" color touchscreen LCD-SLP display. Up to six keyboard LCD displays may be remotely located. In addition, you can install five of the familiar LCD-7100/RAN-7100 remote displays. The displays show instant system status information and can be Connected in any desired area of an installation.

FEATURES AND BENEFITS

- Offers Class B, Class A or Class X* signaling line circuits
- IBC Seismic Certified
- Listed under UL® Standard 864, 10th Edition
- Listed under UL Standard UL 2572 for Mass Notification
- UL Listed for smoke control (dedicated and non-dedicated) when properly configured
- UL Listed and FM Approved for Pre-action/ Deluge and Agent Releasing
- Provides two to 244 SLCs, each supporting 159 sensors, 159 modules and 159 addressable sounder bases
- 625K bits per second ARCNET communications using wire, fiber, or mixed configurations for installation flexibility
- High-speed 32 bit processor and 8100 event history log
- Advanced Boolean logic-based programming such as AND, OR, NOT, time delay and calendar functions configurable via computer programming
- Supports up to (16), ASM-16 addressable switch or ANU-48 LED driver modules per ILI-MB-E3/ILI95-MB-E3
- Two Class A or Class B, notification appliance circuits rated at 2.0 amps. per circuit
- Integral city connection
- Up to 9 levels of sensitivity adjustment
- Flexible 115,200 baud high speed RS-232 interface
- 40 character user-defined text per device
- Supports the following:
  - -15 LCD-SLP displays/annunciators
  - -6 LCD-E3 displays/annunciators
  - -5 LCD-7100/RAN-7100 remote LED annunciators per ILI-MB-E3/ ILI95-MB-E3
- Polls 318 devices in less than two seconds
- Activate up to 159 outputs in less than five seconds
- LED's blink associated device address during Walk Test.
- Fully digital, high-precision protocol
- Drift compensation
- Pre-Alarm adjustable between 15 levels for both Alert and Action
- Day/night automatic sensing adjustment Sensitivity windows:
  - -Ion 0.05 - 2% obscuration
  - -Photo 1 - 3% obscuration
  - -Laser 0.02 - 2% obscuration
- MCS Acclimate 2.5 -4%, also self-adjustable options:
  - -1-2%
  - -2-3%
  - -3-4%
- HARSH 1-3% obscuration
- Each Loop Card has its own integral processor providing maximum survivability on loss of any other component. SLC provides full response on loss of any other system processor
- Optional programmable switches can be configured to enable, disable or group any combination of output devices
- Integrated point or Grouped Cross Zoning allows for numerous devices installed at any location to cooperate and determine alarm condition
- Automatic detector sensitivity testing
- Signals DIRTY and VERY DIRTY detector maintenance alerts

Honeywell Gamewell FCI

GENERAL

A high-speed 32-bit processor can easily implement a wide array of applications used in small office buildings or used in multi-complex, high-rise installations. The 64 node networking is made possible by 625K bits per second ARCNET communications using twisted-pair copper cable, fiber-optic cable, or a combination of both. In addition, the Addressable Node Expander (ANX) board expands the network to 122 nodes. The basic E3 Series is equipped with the following modules:

- PM-9 Power Supply
- ASM-16 (Addressable Switch Module)
- ILI-MB-E3/ILI95-MB-E3 (Intelligent Loop Interface-Main Board)
- ILI-S-E3/ILI95-S-E3 (Intelligent Loop Interface-Expansion Board)
- LCD-E3 (LCD Keypad Display)

The ASM-16 features 16 software programmable switches, each accompanied by red, green and yellow LEDs that can be programmed to indicate the operation of the switches. Additional ASM-16 modules may be added to expand the operation to a plateau previously unimagined.

The Intelligent Loop Interface - Expansion Board (ILI-S-E3/ILI95-S-E3 provides the E3 Series control panel with two additional electrically isolated signaling line circuits. The layout is similar to the ILI-MB-E3/ ILI95-MB-E3 with the exception that a number of components are omitted. It occupies one node on the Broadband network.

Each ILI-MB-E3/ILI95-MB-E3 can support as many as sixteen ANU-48 LED Driver modules supporting hundreds of LEDs on a third party graphic annunciator to use for remote annunciation. The ANU-48 modules may be installed in any Listed remote annunciator. It can be remotely located via an RS-485 serial interface. An array of cabinets allows for neat, compact, attractive installations.

INSTALLATION

The E3 Series Expandable Emergency Evacuation System offers four cabinet size options. A typical cabinet includes a backbox, an inner door, and an outer door. The E3 Series cabinet assembly is a compact 19 3/8" (49 cm) wide, wall-mounted enclosure.

- Cabinet A includes the following four options:
  - Cabinet A1 inner door mounted to the backbox. The backbox houses one NGA module.
  - Cabinet A2 inner door mounted to the backbox. The backbox houses one LCD-E3 module.
  - Two or three-bay inner door mounted to the backbox.
  - The backbox typically houses one LCD-E3, or one NGA, and one or two ASM-16 modules.
- Cabinet B contains a space for the following modules installed inside the backbox:
  - ILI-MB-E3
  - ILI95-MB-E3
  - PM-9
  - PM-9G

Additional module options mounted on the backbox include the following:
- ANX
- ILI-S-E3
- RPT-E3-UTP
- DACT-E3
- ILI95-S-E3

The 2-bay inner door houses one LCD-E3 module and one ASM-16 module.

- Both Cabinets C and D include the following:
  - Pre-assembled outer door that provides visibility to the fire fighter's phone handset and a microphone voice messaging system.
  - Two inner door panel selections that may contain optional modules to meet the facility operation requirements.

In the Cabinet B, C and D backboxes, the ANX appears in the same place as the ILI-MB-E3/ILI95-MB-E3 and PM-9/PM-9G. For information on the installation instructions for any of the E3 Series cabinets, refer to the E3 Series® Expandable Emergency Evacuation Manual, Part Number: LS10080-051GF-E.

For other options including information on the system's compatibility with the retrofit equipment, refer to the panel's installation manual, P/N:LS10080-051GF-E or the Compatibility Addendum for Gamewell-FCI Manuals, P/N: 9000-0427-L8.

ORDERING INFORMATION

ILI-MB-E3: Intelligent Loop Interface-Main Board
ILI95-MB-E3: Intelligent Loop Interface-Main Board
ILI-S-E3: Intelligent Loop Interface-Expansion Board
ILI95-S-E3: Intelligent Loop Interface-Expansion Board
ANX-SR: Addressable Node Expander-Single Ring
ANX-MR-FO: Addressable Node Expander-Multi-Ring Fiber Optic
ANX-MR-UTP: Addressable Node Expander-Multi-Ring Twisted-pair
LCD-E3: LCD-E3, LCD Keypad Display
LCD-SLP: LCD Color Touchscreen with five programmable switches
RPT-E3-UTP: Network Repeater, unshielded, twisted-pair
FML-E3: Multi-Mode Fiber-Optic Module
FSL-E3: Single-Mode Fiber-Optic Module
DACT-E3: Digital Alarm Communicator Transmitter
ANU-48: ANU-48 LED Driver Module
ASM-16: Addressable Switch Module
NGA: LCD Network Graphic Annunciator
PM-9: Power Supply Module, 120 VAC
PM-9G: Power Supply Module, 220/240 VAC
LCD-7100: Remote LCD Display
RAN-7100: Remote LCD Display

Note: For additional information on the cabinets, refer to the E3 Series Cabinets data sheet (Part Number: 9020-0649).

Seismic Battery Bracket Kits
For information on the types of Seismic Battery Bracket Kits that are available, the Seismic Battery Bracket Kit Part Numbers and the Installation Instructions, refer to the following documents:
- Seismic Battery Bracket Installation Guide, P/N: 53839
- E3 Series Cabinets Data Sheet, P/N: 9020-0649

DIVISION OF THE STATE ARCHITECT

IDENTIFICATION STAMP
DIV. OF THE STATE ARCHITECT
APP: 03-124589 INC:
REVIEWED FOR
SS ☑ FLS ☑ ACS ☑
DATE: 04/15/2025

VENTURA COUNTY COMMUNITY COLLEGE DISTRICT
MOORPARK OXNARD VENTURA

VENTURA COUNTY COMMUNITY COLLEGE DISTRICT
761 EAST DAILY DRIVE
CAMARILLO, CALIFORNIA 93010
TEL: (805) 652-5500

PROJECT TITLE AND SCHOOL LOCATION

VENTURA COMMUNITY COLLEGE STEM MODULAR BUILDING
VENTURA COMMUNITY COLLEGE
4667 TELEGRAPH RD.
VENTURA, CA 93003

COMMISSIONED ARCHITECT

AMADOR
amador whittle architects, inc.
28328 AGOURA RD, 203 | AGOURA HILLS CA, 91301 | 805-558-4334

CONSULTANT
LUCCI & ASSOCIATES INC.
CONSULTING ELECTRICAL ENGINEERS
3251 CORTE MALPASO, #511
CAMARILLO, CA 93012-8094
(805) 389-6520 FAX (805) 389-6519

LUCCI & ASSOCIATES, INC. reserve their commonlaw copyright and other property rights in these plans. These plans and drawings are not to be reproduced, changed, or copied in any form or manner whatsoever without first obtaining the expressed written permission and consent of LUCCI & ASSOC. INC nor are they to be assigned to any third party without obtaining said written permission and consent.

STAMPS/SEALS

REGISTERED PROFESSIONAL ENGINEER KENNETH W. LUCCI No. E 8340 Exp. 09/30/2026 ELECTRICAL STATE OF CALIFORNIA

LICENSED ARCHITECT WILLIAM JORGE AMADOR C-20348 JANUARY 31, 2027 RENEWAL DATE STATE OF CALIFORNIA

DSA V3 SUBMITTAL 03/21/2025

SHEET TITLE:
FIRE ALARM DATA SHEETS

PROJECT NO.: 22-VCCCD-08	PROJECT ARCH: Designer
DRAWN: LK/DS/IT	CHECKED: KL

SHEET NUMBER:
E504

DATE: 12/20/24 SHEET: ____ OF ____

Copyright Lucci and Associates Consulting Electrical Engineers. Deviations from this drawing will not be made without their expressed written permission.

L.A.I.# 22-539 PAPER SIZE 42"x30"

Honeywell | Addressable Devices

Velociti Series® AOM-2RF

Addressable Output Relay Control Module

AOM-2RF

General

The Gamewell-FCI Velociti® Series, addressable output relay control module (AOM-2RF) allows a Gamewell-FCI analog addressable fire alarm control panel to switch discrete relay contacts by code command. The relay provides two isolated sets of Form-C contacts which transfer simultaneously. Circuit connections to the relay contacts are not supervised by the module.

The Velociti® Series use a communication protocol that substantially increases the speed of communication between the SLC devices and certain Gamewell-FCI analog addressable fire alarm control panels. These devices operate in a grouped fashion. If one of the devices in the group has a status change, the panel's microprocessor stops the group poll and concentrates on the single device. The net result produces a superior response speed up to five times greater than earlier designs.

The AOM-2RF Module is designed for installation in the signaling line circuit of any Gamewell-FCI analog addressable fire alarm control panel. The module contains a panel controlled LED. The AOM-2RF is designed to mount in a 4" (10.16 cm) square junction box 2 1/8" (5.53 cm) deep.

Ordering Information

AOM-2RF: Addressable output relay control module

Table 1 lists the relay contact ratings.

CURRENT RATING	MAXIMUM VOLTAGE	LOAD DESCRIPTION	APPLICATION
.3A	30 VDC	Resistive	Non-Coded
2A	30 VDC	Resistive	Coded
0.3A	110 VDC	Resistive	Non-Coded
0.5A	125 VAC	Resistive	Non-Coded
0.5A	30 VDC	Inductive (L/R=5ms)	Coded
1A	30 VDC	Inductive (L/R=2ms)	Coded
0.5A	125 VAC	Inductive (PF=.35)	Non-Coded
0.7A	75 VAC	Inductive	Non-Coded

Table 1: Relay Contact Ratings

FEATURES & BENEFITS

- Listed under UL® Standard 864
- Offers two sets of Form "C" contacts
- Provides visual rotary, decimal switch addressing (01-159)
- Includes a bi-color LED that flashes green whenever the module is addressed, and lights steady red upon activation*
- Designed as a compact size to allow easy installation

Note 1: Only the red LED is operative in panels that do not operate in Velociti® mode
*Note 2: The bi-color LED functionality is not available on the GWF-7075 panel.

Velociti Series® AOM-2RF Technical Specifications

SYSTEMS

Supervisory Current: .000375 amps.
Average Operating Current:
255 uA (Velociti Mode)
230 uA (CLIP Mode)
Alarm Current: .0065 amps.
Operating Temperature: 32° to 120° F (0° to 49° C)
Relative Humidity: 10 to 93% relative humidity (non-condensing)
Dimensions: 4 1/2" H x 4" W x 1 1/4" (11.4 x 10.2 x 3.2 cm)

TEMPERATURE AND HUMIDITY RANGES

This system meets NFPA requirements for operation at 0 – 49°C/32 – 120°F and at a relative humidity 93% ± 2% RH (noncondensing) at 32°C ± 2°C (90°F ± 3°F). However, the useful life of the system's standby batteries and the electronic components may be adversely affected by extreme temperature ranges and humidity. Therefore, it is recommended that this system and its peripherals be installed in an environment with a normal room temperature of 15 – 27°C/60 – 80°F.

STANDARDS

The Velociti Series® AOM-2RF is designed to comply with the following standard:
UL Standard: UL 864 9th Edition

AGENCY LISTINGS AND APPROVALS

These listings and approvals apply to the modules specified in this document. In some cases, certain modules or applications may not be listed by certain approval agencies, or listing may be in process. Consult factory for latest listing status.
UL: S1913
FM: 3023594
FDNY: COA-219-02-E Vol. VI
CSFM: 7300-1703:0102
ISO 9001 Certification

For a complete listing of all compliance approvals and certifications, please visit: http://www.gamewell-fci.com/en-US/documentation/Pages/Listings.aspx

Velociti® Series and Gamewell-FCI® are registered trademarks of Honeywell International Inc.

ULT is a registered trademark of Underwriter's Laboratories Inc.

This document is not intended to be used for installation purposes. We try to keep our product information up-to-date and accurate. We cannot cover all specific applications or anticipate all requirements. All specifications are subject to change without notice.

For more information
Learn more about Gamewell-FCI's Velociti Series® AOM-2RF and other products available by visiting www.Gamewell-FCI.com

Honeywell Gamewell-FCI
12 Clintonville Road
Northford, CT 06472-1610
203.484.7161
www.honeywell.com

9000-0625 | | 04/19

©2019 Honeywell International Inc.

Honeywell

CALIFORNIA DEPARTMENT OF FORESTRY & FIRE PROTECTION
OFFICE OF THE STATE FIRE MARSHAL
FIRE ENGINEERING & INVESTIGATIONS DIVISION
BUILDING MATERIALS LISTING PROGRAM

LISTING SERVICE

LISTING No.:	7300-1703:0102
PARENT LISTING No.:	7300-1653:0103
CATEGORY:	7300 - FIRE ALARM CONTROL UNIT ACCESSORIES/MISC. DEVICES
LISTEE:	GAMEWELL-FCI 12 Clintonville Road, Northford, CT, 06472 Contact: Brant, Lisa 2034846105 Email: lisa.brant@honeywell.com
DESIGN:	Models AMM-4, *AMM-4F, AMM-2 and *AMM-2F monitor modules and Models AOM, AOM-2, AOM-2R, *AOM-2RF, AOM-2S and *AOM-2SF control modules. Refer to listee's data sheet for detailed product description and operational considerations.
RATING:	
INSTALLATION:	In accordance with listee's printed installation instructions, applicable codes and ordinances and in a manner acceptable to the authority having jurisdiction.
MARKING:	Listee's name, model designation, electrical rating and UL label.
APPROVAL:	Listed as accessories for use with separately listed compatible control units. System Sensor Model SMB500 surface mount box (CSFM Listing No. 7300-1653:103) may be used as an enclosure for these modules
NOTES:	FORMERLY: 7300-0694:178

12-4-07

This listing is based upon technical data submitted by the applicant. OSFM Fire Engineering staff has reviewed the test resultsand/or other data but does not make an independent verification of any claims. This listing is not an endorsement or recommendation of the item listed. This listing should not be used to verify correct operational requirements or installation criteria.Refer to listee's data sheet, installation instructions and/or other suitable information sources.

Date Issued: 05/08/2024 **Listing Expires: 06/30/2025**

Authorized By: **David Castillo** , Program Coordinator
Fire Engineering & Investigations Division

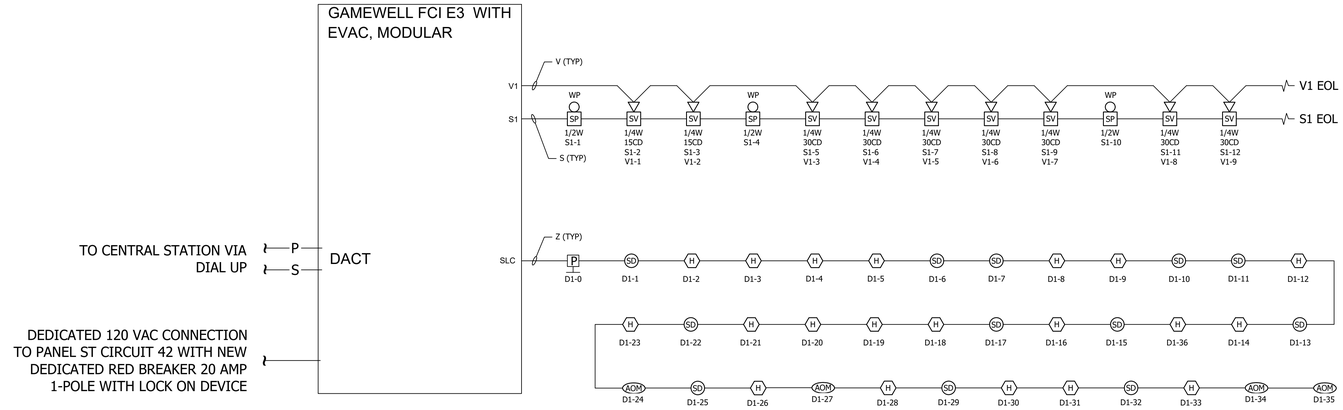

AS NOTED ON E140 ALL NEW MODULAR BUILDINGS ARE MORE THAN 20 FEET FROM ANY ADJACENT STRUCTURES

PER 907 2.3.1 "SYSTEM CONNECTION"

EXCEPTION: INTERCONNECTION OF FIRE ALARM CONTROL UNITS IS NOT REQUIRED WHEN ALL THE FOLLOWING ARE PROVIDED: BUILDINGS THAT ARE SEPARATE A MINIMUM OF 20 FEET (6096MM) AND IN ACCORDANCE WITH THE CALIFORNIA BUILDING CODE; AND THERE IS A METHOD OF TWO WAY COMMUNICATION BETWEEN EACH CLASSROOM AND THE SCHOOL ADMINISTRATIVE OFFICE APPROVED BY THE FIRE ENFORCING AGENCY; AND A METHOD OF MANUAL ACTIVATION OF EACH FIRE ALARM SYSTEM IS PROVIDED.

FA SYSTEM IS TIED INTO EXISTING CAMPUS FIRE ALARM SYSTEM WHICH IS CAPABLE OF ADDING NEW PANELS / DEVICES

VOLTAGE DROP CALCULATIONS - VISUAL APPLIANCE CIRCUITS

PANEL ID	CKT #	15cd STROBE 0.043		30cd STROBE 0.063		75cd STROBE 0.107		110cd STROBE 0.148		15cd STROBE 0.055		30cd STROBE 0.078		75cd STROBE 0.153		110cd STROBE 0.185		102cd STROBE 0.172		(I) TOTAL CURRENT	x	LENGTH FT.	x	21.6	÷	CIR MILS 14awg	=	VOLTS DROPPED	÷	24(V)	x	100	% VOLTAGE DROP
		QTY.	AMP	QTY.	AMP	QTY.	AMP	QTY.	AMP	QTY.	AMP	QTY.	AMP	QTY.	AMP	QTY.	AMP	QTY.	AMP														
	S1	2	0.086	7	0.441		0.000		0.000		0.000		0.000		0.000		0.000		0.000	0.527	x	110	x	21.6	÷	4110	=	0.305	÷	24	x	100	**1.3**

I x FEET x 21.6 = VOLTAGE DROPPED
C.M.
I = TOTAL CIRCUIT CURRENT
FEET = ONE WAY DISTANCE IN FEET MEASURED FROM SOURCE TO THE LAST DEVICE
21.6 = FORMULA CONSTANT
C.M. = CROSS SECTIONAL AREA OF CONDUCTOR IN CIRCULAR MILS. SEE CHART BELOW

WIRE SIZE	WIRE RESISTANCE	CIR. MILS
AWG 12	1.59 PER 1000'	6530
AWG 14	2.52 PER 1000'	4110
AWG 16	4.02 PER 1000'	2580
AWG 18	6.39 PER 1000'	1620

VOLTAGE DROP CALCULATIONS - SPEAKER APPLIANCE CIRCUITS

PANEL ID	CKT #	1/4 WATT 0.017		1/2 WATT 0.034		1 WATT 0.068		2 WATT 0.132		- 0.000		- 0.000		- 0.000		- 0.000		- 0.000		(I) TOTAL CURRENT	x	LENGTH FT.	x	21.6	÷	CIR MILS 16awg	=	VOLTS DROPPED	÷	24(V)	x	100	% VOLTAGE DROP
		QTY.	AMP	QTY.	AMP	QTY.	AMP	QTY.	AMP	QTY.	AMP	QTY.	AMP	QTY.	AMP	QTY.	AMP	QTY.	AMP														
AMP	V1	9	0.153	3	0.102		0.000		0.000		0.000		0.000		0.000		0.000		0.000	0.255	x	120	x	21.6	÷	2580	=	0.256	÷	24	x	100	**1.1**

I x FEET x 21.6 = VOLTAGE DROPPED
C.M.
I = TOTAL CIRCUIT CURRENT
FEET = ONE WAY DISTANCE IN FEET MEASURED FROM SOURCE TO THE LAST DEVICE
21.6 = FORMULA CONSTANT
C.M. = CROSS SECTIONAL AREA OF CONDUCTOR IN CIRCULAR MILS. SEE CHART BELOW

WIRE SIZE	WIRE RESISTANCE	CIR. MILS
AWG 12	1.59 PER 1000'	6530
AWG 14	2.52 PER 1000'	4110
AWG 16	4.02 PER 1000'	2580
AWG 18	6.39 PER 1000'	1620

DIVISION OF THE STATE ARCHITECT

IDENTIFICATION STAMP
DIV. OF THE STATE ARCHITECT
APP: 03-124589 INC:
REVIEWED FOR
SS ☑ FLS ☑ ACS ☑
DATE: 04/15/2025

VENTURA COUNTY COMMUNITY COLLEGE DISTRICT
MOORPARK OXNARD VENTURA

VENTURA COUNTY COMMUNITY COLLEGE DISTRICT
761 EAST DAILY DRIVE
CAMARILLO, CALIFORNIA 93010
TEL: (805) 652-5500

PROJECT TITLE AND SCHOOL LOCATION

VENTURA COMMUNITY COLLEGE STEM MODULAR BUILDING
VENTURA COMMUNITY COLLEGE
4667 TELEGRAPH RD.
VENTURA, CA 93003

COMMISSIONED ARCHITECT

AMADOR

amador whittle architects, inc.
28328 AGOURA RD, 203 | AGOURA HILLS CA, 91301 | 805-558-4334

CONSULTANT

LUCCI & ASSOCIATES INC.
CONSULTING ELECTRICAL ENGINEERS
3251 CORTE MALPASO, #611
CAMARILLO, CA 93012-8094
(805) 389-6520 FAX (805) 389-6519

LUCCI & ASSOCIATES, INC. reserve their commonlaw copyright and other property rights in these plans. These plans and drawings are not to be reproduced, changed, or copied in any form or manner whatsoever without first obtaining the expressed written permission and consent of LUCCI & ASSOC. INC nor are they to be assigned to any third party without obtaining said written permission and consent.

STAMPS/SEALS

REGISTERED PROFESSIONAL ENGINEER
KENNETH W. LUCCI
No. E 8340
Exp. 09/30/2026
ELECTRICAL
STATE OF CALIFORNIA

LICENSED ARCHITECT
WILLIAM JORGE AMADOR
C-20348
JANUARY 31, 2027
RENEWAL DATE
STATE OF CALIFORNIA

DSA V3 SUBMITTAL 03/21/2025

SHEET TITLE:

FIRE ALARM RISER DIAGRAM, VOLTAGE DROP, AND BATTERY CALCULATION

PROJECT NO.: 22-VCCCD-08	PROJECT ARCH: Designer
DRAWN: LK/DS/IT	CHECKED: KL

SHEET NUMBER:

E506

DATE: 12/20/24 SHEET: ___ OF ___

Copyright Lucci and Associates Consulting Electrical Engineers. Deviations from this drawing will not be made without their expressed written permission.

L.A.I.# 22-539 PAPER SIZE 42"x30"

DRAFTER: CM02 DRAWING FILENAME: 22-539E506 PATHNAME: G:\22\539\EL\Sheets DATE: 20 December 2024 TIME: 3:33 pm

CALIFORNIA DEPARTMENT OF FORESTRY & FIRE PROTECTION
OFFICE OF THE STATE FIRE MARSHAL
FIRE ENGINEERING - BUILDING MATERIALS LISTING PROGRAM

LISTING SERVICE

LISTING No. 7272-1703:0504

CATEGORY: 7272 -- SMOKE DETECTOR-SYSTEM TYPE-PHOTOELECTRIC

LISTEE: GAMEWELL-FCI12 Clintonville Road, Northford, CT 06472
Contact: Lisa Brant (203) 484-6105 Fax (203) 484-7309
Email: lisa.brant@honeywell.com

DESIGN: Model ASD-LS3 addressable intelligent photoelectric smoke detector. Refer to listee's printed data sheet for additional detailed product description and operational considerations.

RATING: 24 VDC

INSTALLATION: In accordance with listee's printed installation instructions, applicable codes and ordinances and in a manner acceptable to the authority having jurisdiction.

MARKING: Listee's name, model number, electrical rating, and UL label.

APPROVAL: Listed as photoelectric smoke detector for use with System Sensor base models B200S, B200S-WH, B200S-IV, B200SR, B200SR-WH, B200SR-IV (CSFM Listing 7300-1653:0213), B200S-LF, B200S-LF-WH, B200S-LF-IV, B200SR-LF, B200SR-LF-WH, B200SR-LF-IV (CSFM Listing 7300-1653:0238), B210LP, B300-6, B300-6-IV, B300-6-IS, B501, B501-BL, B501-IV, B501-WHITE (CSFM Listing 7300-1653:0109), B224BI, B224BI-WH, B224BI-IV, B224RB, B224RB-WH, B224RB-IV (CSFM Listing 7300-1653:0126), System Sensor duct smoke detector housing models DNR, DNRW, DNRHS (CSFM Listing 3242-1653:0209), and separately listed compatible fire alarm control units. For wall and ceiling mount. Suitable in open areas with air velocities up to 4000 ft/min. Suitable in duct applications with air velocities up to 4000 ft/min. Refer to Manufacturers Installation Instruction Manual for details.

XLF: 7272-0028:0506

08-01-18 gt

This listing is based upon technical data submitted by the applicant. CSFM Fire Engineering staff has reviewed the test results and/or other data but does not make an independent verification of any claims. This listing is not an endorsement or recommendation of the item listed. This listing should not be used to verify correct operational requirements or installation criteria. Refer to listee's data sheet, installation instructions and/or other

Date Issued: **July 01, 2022** *Listing Expires* **June 30, 2023**

Authorized By: ***VICTOR WONG**, Program Coordinator*
Fire Engineering Division

Velociti® Series 3, ASD-LS3 Technical Specifications

SYSTEM

Physical/Operating Specifications:
Height: 2.0 inches (51 mm) installed in B300-6 base
Diameter: 6.2 inches (156 mm) installed in B300-6 base
4.1 inches (104 mm) installed in B501-WHITE/-IV/-BL base
Weight: 3.4 oz (95 g)
Operating Temperature Range: 14ºF to 140ºF (-10ºC to 60ºC)
Operating Humidity Range: 10% to 93% relative humidity, non-condensing
Air Velocity: 0 to 4,000 fpm (0 to 1219 m/minute)
Isolator Load Rating: 0.0063*
Self Diagnostics: Initiated by control panel
Activated by test magnet
Smoke Sensitivity: 9 levels: 0.02, 0.03, 0.05, 0.10, 0.20, 0.50, 1.00, 1.50, 2.00%/ft. obscuration (0.06, 0.10, 0.16, 0.33, 0.66, 1.65, 3.24, 4.85, 6.41%/m obscuration)
Drift Compensation: High sensitivity maintenance alert signal
Low sensitivity maintenance alert signal
Maintenance urgent signal

Electrical Specifications:
Operating Voltage Range: 15 to 32 VDC
Operating Current: @ 24 VDC 300 µA (one communication every 5 seconds with green LED blink on communication)
Maximum Current: 4.5 mA @ 24 VDC (one communication every 5 seconds with amber LED solid on)
Maximum Alarm Current: 2 mA @ 24 VDC (one communication every 5 seconds with red LED solid on)

STANDARDS

The Velociti Series 3, ASD-LS3, High Sensitivity Photoelectric Spot Detector is designed to comply with the following standard:

UL STANDARD

UL Standard: UL 864 9th Edition

AGENCY LISTINGS AND APPROVALS

These listings and approvals apply to the detectors specified in this document. In some cases, certain detectors or applications may not be listed by certain approval agencies, or listing may be in process. Consult the factory for the latest listing status.

UL Listed: UL 268 listed for Open Air Protection (0.5%/ft. to 2.0%/ft. obscuration)
UL 268 listed for Special Applications (0.02%/ft. to 0.5%/ft. obscuration)
UL 268A listed for Duct Applications
FM Approved: 450564
CSFM: 7272-1703:0504
ISO 9001 Certification

For a complete listing of all compliance approvals and certifications, please visit: http://www.gamewell-fci.com/en-US/documentation/Pages/Listings.aspx

E3 Series®, Velociti®, Gamewell-FCI®, and System Sensor® are registered trademarks of Honeywell International Inc.

UL® is a registered trademark of Underwriter's Laboratories Inc.

This document is not intended to be used for installation purposes. We try to keep our product information up-to-date and accurate. We cannot cover all specific applications or anticipate all requirements. All specifications are subject to change without notice.

For more information
Learn more about Gamewell-FCI's Velociti® Series 3, ASD-LS3 and other products available by visiting www.Gamewell-FCI.com

Honeywell Gamewell-FCI
12 Clintonville Road
Northford, CT 06472-1610
203.484.7161
www.honeywell.com

9021-61033 | B | 08/18
©2018 Honeywell International Inc.

Honeywell | Addressable Devices

Velociti® Series 3, ASD-LS3

High-Sensitivity Photoelectric Spot Detector

ASD-LS3

General

The Velociti® Series 3, ASD-LS3 is a high-sensitivity photoelectric smoke detector designed for Very Early Warning Fire Detection. It is used to protect valuable assets and operations, where systems must remain functioning at all times.

The high-sensitivity detector features a smoke-sensing chamber and patented optic block designed to amplify signals from smoke, but diminish stray internal reflections that can cause false alarms. New LED technology allows the Velociti® Series 3, ASD-LS3 to achieve sensitivity levels from 0.02 percent-per-foot to 2 percent-per-foot obscuration – up to 25 times greater than a standard photoelectric detector. The extensive software processing includes multi-alert drift compensation, internal self-diagnostics, and superior transient signal rejection algorithms to produce unprecedented stability at ultra-high sensitivities across the full temperature range. The Velociti® Series 3, ASD-LS3 provides point identification of the fire location through addressability and offers complete supervision of both the wiring and detector.

The Velociti® Series 3, ASD-LS3 detector complies with the following UL Standards:

- UL® 268 listed for Open Air Protection (0.5%/ft. to 2.0%/ft. obscuration)
- UL® 268 listed for Special Applications (0.02%/ft. to 0.5%/ft. obscuration)
- UL® 268A listed for Duct Applications allowing both in duct and within System Sensor models DNR and DNRW duct smoke detectors

In addition, the new modern profile blends seamlessly with other Velociti Series 3 detectors, and offers expanded color options that support contemporary aesthetic demands.

The Velociti® Series 3, ASD-LS3,, is the ideal detection solution for sensitive environments that cannot tolerate even small amounts of smoke:

- Telecommunications switching facilities
- Cellular telephone infrastructure
- Integrated circuit fabrication facilities
- Computer rooms
- Traffic control centers
- Data Centers

FEATURES & BENEFITS

- Provides superior EMI protection
- Designed with Very Early Warning Fire Detection capability
- Supports Analog communications
- Applies a low standby current
- Contains rotary address switches
- Has dual LEDs for 360º visibility
- Includes On-board drift compensation
- Uses Transient rejection algorithms
- Employs a Microprocessor design
- Communicates using either Velociti® or CLIP protocol
- Offers new modern profile with expanded color options

Accessories

Figure 1 RA100Z (Remote LED Annunciator)

Figure 2 CK300-BL Color Kit

Figure 3 TR300 Trim Ring

Ordering Information

Part Number			Description
White	Ivory	Black	
ASD-LS3			High sensitivity photoelectric smoke detector (laser replacement)
BASES			
B501-WHITE	B501-IV	B501-BL	4" Mounting base
B501-WHITE-BP			4" Mounting base, bulk pack
B300-6	B300-6-IV		6" Flanged mounting base
B300-6-BP			6" Flanged mounting base, bulk pack
B200S-WH	B200S-IV		Intelligent sounder base
B200S-LF-WH	B200S-LF-IV		Intelligent sounder base, low-frequency
B200SR-WH	B200SR-IV		Intelligent sounder base
B200SR-LF-WH	B200SR-LF-IV		Intelligent sounder base, low frequency
B224RB-WH	B224RB-IV		Relay base
B224BI-WH	B224BI-IV		Isolator base
Accessories			
	SMB600		Surface Mounting Kit (flanged)
TR300	TR300-IV		Trim ring
CK300	CK300-IV	CK300-BL	Color Kit (includes cover and trim ring)
	RA100Z		RA100Z Remote LED annunciator
M02-04-01			Detector test magnet
M02-09-00			Telescoping test magnet

DIVISION OF THE STATE ARCHITECT

IDENTIFICATION STAMP
DIV. OF THE STATE ARCHITECT
APP: 03-124589 INC:
REVIEWED FOR
SS ☑ FLS ☑ ACS ☑
DATE: 04/15/2025

VENTURA COUNTY COMMUNITY COLLEGE DISTRICT
761 EAST DAILY DRIVE
CAMARILLO, CALIFORNIA 93010
TEL: (805) 652-5500

PROJECT TITLE AND SCHOOL LOCATION

VENTURA COMMUNITY COLLEGE STEM MODULAR BUILDING
VENTURA COMMUNITY COLLEGE
4667 TELEGRAPH RD.
VENTURA, CA 93003

COMMISSIONED ARCHITECT

AMADOR
amador wittlife architects, inc.
28328 AGOURA RD, 203 | AGOURA HILLS CA, 91301 | 805-558-4334

CONSULTANT

LUCCI & ASSOCIATES INC.
CONSULTING ELECTRICAL ENGINEERS
3251 CORTE MALPASO, #611
CAMARILLO, CA 93012-8094
(805) 389-6520 FAX (805) 389-6519

LUCCI & ASSOCIATES, INC. reserve their commonlaw copyright and other property rights in these plans. These plans and drawings are not to be reproduced, changed, or copied in any form or manner whatsoever without first obtaining the expressed written permission and consent of LUCCI & ASSOC. INC nor are they to be assigned to any third party without obtaining said written permission and consent.

STAMPS/SEALS

REGISTERED PROFESSIONAL ENGINEER
KENNETH N. LUCCI
NO. E 8540
Exp. 09/30/2026
ELECTRICAL
STATE OF CALIFORNIA

LICENSED ARCHITECT
WILLIAM JORGE AMADOR
C-20348
JANUARY 31, 2027
RENEWAL DATE
STATE OF CALIFORNIA

DSA V3 SUBMITTAL 03/21/2025

SHEET TITLE:

FIRE ALARM DATA SHEETS

PROJECT NO: 22-VCCCD-08 | PROJECT ARCH: Designer
DRAWN: LK/DS/IT | CHECKED: KL
SHEET NUMBER:

E507

DATE: 12/20/24 | SHEET: ___ OF ___

Copyright Lucci and Associates Consulting Electrical Engineers. Deviations from this drawing will not be made without their expressed written permission.

L.A.I.# 22-539 PAPER SIZE 42"x30"

DATE: 20 December 2024 TIME: 3:33 pm
PATHNAME: G:\22\539\ELS\Sheets
DRAWING FILENAME: 22-539E507
DRAFTER: CM02

CALIFORNIA DEPARTMENT OF FORESTRY & FIRE PROTECTION
OFFICE OF THE STATE FIRE MARSHAL
FIRE ENGINEERING - BUILDING MATERIALS LISTING PROGRAM

LISTING SERVICE

LISTING No. 7270-1703:0502

CATEGORY: 7270 -- HEAT DETECTOR

LISTEE: GAMEWELL-FCI12 Clintonville Road, Northford, CT 06472
Contact: Lisa Brant (203) 484-6105 Fax (203) 484-7309
Email: lisa.brant@honeywell.com

DESIGN: Models ATD-L3, ATD-L3H (fixed temperature) and ATD-L3R (fixed temperature with Rate-of-Rise) electronic heat detectors. Suffix -IV for ivory color and -BL for black color. Refer to listee's data sheet for additional detailed product description and operational considerations.

RATING: Model ATD-L3 (fixed temperature): 135°F.
Model ATD-L3H (fixed temperature): 190°F.
Model ATD-L3R (fixed temperature with rate of rise):135°F.

INSTALLATION: In accordance with listee's printed installation instructions, applicable codes and ordinances and in a manner acceptable to the authority having jurisdiction.

MARKING: Listee's name, model number, electrical ratings, and UL label.

APPROVAL: Listed as heat detectors for use with Notifier base B710LP (CSFM#7300-0028:173); System Sensor bases B501, B210LP, B300-6, B300-6-IS (CSFM#7300-1653:0109); B224BI, B224RB (CSFM#7300-1653:0126); B200S, B200SR (CSFM#7300-1653:0213); B200S-LF, B200SR-LF (CSFM#7300-1653:238); and separately listed compatible fire alarm control units. Refer to listee's Installation Instructions Manual for details.

XLF: 7270-0028:0502

02-01-18 gt

This listing is based upon technical data submitted by the applicant. CSFM Fire Engineering staff has reviewed the test results and/or other data but does not make an independent verification of any claims. This listing is not an endorsement or recommendation of the item listed. This listing should not be used to verify correct operational requirements or installation criteria. Refer to listee's data sheet, installation instructions and/or other

Date Issued: **July 01, 2022** *Listing Expires* **June 30, 2023**

Authorized By: ***VICTOR WONG**, Program Coordinator*
Fire Engineering Division

Velociti® Series 3 Detectors Technical Specifications

SYSTEMS

Thermal Intelligent Detector
Physical Specifications
Height: 2.0 inches (51 mm) installed in B300-6 base
Diameter:
6.1 inches (15.6 cm) installed in B300-6 base
4 inches (10.2 cm) installed in B501 base
Shipping Weight: 3.4 oz (95 g)
Operating Temperature Range:
Thermal 135° F fixed: -4° F to 100° F (-20° C to 38° C)
Thermal 135° F rate-of-rise: -4° F to 100° F (-20° C to 38° C)
Thermal 190° F rate-of-rise: -4° F to 135° F (-20° C to 57° C)
Operating Humidity Range: 10% to 93% non-condensing
Rate-of-Rise Detection: : Responds to greater than 15°F/minute or 1.35°F (8.3° C/minute or 57°C
Electrical Specifications
Voltage Range: : 15 to 32 VDC
Standby Current (@ 24 VDC): 200 uA (one communication every 5 seconds with green LED enabled)
Max Alarm Current (max.): : 2 mA @ 24 VDC (one communication every 5 seconds with red LED enabled)
Max Current (max.): : 4.5 mA @ 24 VDC (one communication every 5 seconds with amber LED enabled)
Isolator Load Rating: : 0.0063

STANDARDS

The Velociti® Series 3 Thermal Detectors are designed to comply with the following standard:
UL Standard: UL 268

AGENCY LISTINGS AND APPROVALS

These listings and approvals apply to the modules specified in this document. In some cases, certain modules or applications may not be listed by certain approval agencies, or listing may be in process. Consult factory for latest listing status.
UL: S2332
FM: 3023594
MEA-FDNY: 219-02-E Vol. VI
CSFM: 7270-1703-0502
ISO 9001 Certification

For a complete listing of all compliance approvals and certifications, please visit: http://www.gamewell-fci.com/en-US/documentation/Pages/Listings.aspx

E3 Series®, Velociti® and Gamewell-FCI® are registered trademarks and CLIP™ is a trademark of Honeywell International Inc.

ULⁿ is a registered trademark of Underwriter's Laboratories Inc.

This document is not intended to be used for installation purposes. We try to keep our product information up-to-date and accurate. We cannot cover all specific applications or anticipate all requirements. All specifications are subject to change without notice.

For more information
Learn more about Gamewell-FCI's Velociti® Series 3 Detectors and other products available by visiting www.Gamewell-FCI.com

Honeywell Gamewell-FCI
12 Clintonville Road
Northford, CT 06472-1610
203.484.7161
www.honeywell.com

9020-0620 | G | 04/2018
©2018 Honeywell International Inc.

Honeywell | Addressable Devices

Velociti® Series 3 Detectors

Thermal Detectors

Thermal Detector

Description

The Gamewell-FCI, Velociti® Series 3 intelligent thermal detectors with integral communication provide point location for alarm communication and selective maintenance. Designed in a modern bright white color, the Velociti Series 3 is aesthetically pleasing for today's contemporary buildings.

The Velociti Series 3 heat detectors are intelligent addressable detectors with point ID capability that enable each detector address to be set with rotary address switches providing exact device locations. The thermal detector continually monitors the detected temperature and reports it to the fire alarm control panel. The modern design and expanded color options support a variety of contemporary aesthetic demands. In addition, each detector is constructed for exceptional installation and maintenance efficiency. Velociti Series 3 thermal detectors provide cost-effective, intelligent property protection using the following single thermistor:

- ATD-L3 offers 135°F fixed thermal detection.
- ATD-L3R offers 135°F fixed and rate-of-rise thermal detection.
- ATD-L3H provides fixed high-temperature detection at 190°F .

For legacy installations, service detectors are available in the classic ivory color that will operate in both Velociti and CLIP protocol for backwards compatibility. Service models are designated by the -IV part number that appears after the detector model.

Note: The E3 Series® and S3 Series panels support both the Velociti® and CLIP™ protocols, and the GWF-7075 panel supports only the Velociti® protocol. To obtain a complete list of panels that are listed to Velociti Series 3 detectors, refer to the Compatibility Addendum for Gamewell-FCI Manuals, P/N:9000-0427-L8.

FEATURES & BENEFITS

- Complies with UL® 268 7th Edition
- Designed with a new profile to offer modern and improved aesthetics
- Contains a built-in functional test switch activated by an external magnet
- Supports a low standby current
- Provides rotary address switches (01–159)
- Supplies optional relay, isolator, or sounder bases (standard or low frequency)
- Includes dual LEDs used for 360° visibility
- Offers expanded color options

Ordering Information

NOTE: "-IV" suffix indicates Ivory color model.
NOTE: "-BL" suffix indicates Black color model.
NOTE: "WH" suffix indicates Bright White color model.
ATD-L3: Thermal heat detector, 135°F fixed, bright white, Velociti
ATD-L3-IV: Thermal heat detector, 135°F fixed, ivory, Velociti/CLIP
ATD-L3R: Thermal heat detector, 135°F rate of rise, bright white, Velociti
ATD-L3R-IV: Thermal heat detector, 135°F rate of rise, Ivory, Velociti/CLIP
ATD-L3H: Thermal heat detector, 190°F high temp, bright white, Velociti
ATD-L3H-IV: Thermal heat detector, 190°F high temp, ivory, Velociti/CLIP

Intelligent Bases

For details on intelligent bases, refer to Data Sheet P/N: 9021-6054O.

B501-White: 4" Flangeless mounting base, bright white
B501-White-BP: 4" Flangeless mounting base bulk pack, bright white
B501-IV: 4" Flangeless mounting base, ivory
B501-BL
4" Flangeless mounting base,
B300-6: 6" Flanged mounting base, bright white
B300-6-IV: 6" Flanged mounting base, ivory
B300-6-BP: 6" Flanged mounting base bulk pack
B200SR-WH: Standard sounder base, bright white
B200SR-IV: Standard sounder base, ivory
B200S-WH: Intelligent addressable sounder base, bright white
B200S-IV: Intelligent addressable sounder base, ivory
B200SR-LF-WH: Standard low frequency sounder base, bright white
B200SR-LF-IV: Standard low frequency sounder base, ivory
B200S-LF-WH: Intelligent addressable low frequency sounder base, bright white
B200S-LF-IV: Intelligent addressable low frequency sounder base, ivory
B224RB-WH: Relay base, bright white
B224RB-IV: Relay base, ivory
B224BI-WH: Isolator base, bright white
B224BI-IV: Isolator base, ivory

Ordering Information

Accessories

SMB600: Surface Mounting Kit (flanged)
TR300: Accessory Flange Ring for B300 6" Base, bright white
TR300-IV: Accessory Flange Ring for B300 6" Base, ivory
RA100Z: Remote LED annunciator, 3-32 VDC
The annunciator mounts to a U.S. single-gang electrical box. For use with B501 and B300-6.
CK300: Bright White detector kit (Pack of 10)
CK300-IR: White, detector color kit for use with MCS-COF Series Detectors. (Pack of 10)
CK300-IV: Ivory, detector color kit. (Pack of 10)
CK300-IR-IV: Ivory, detector color kit for use with MCS-COF Series detectors. (Pack of 10)
CK300-BL: Black detector kit (Pack of 10)
CK300-IR-Bl: Black, detector color kit for use with MCS-COF Series detectors. (Pack of 10)
M02-04-01: Detector test magnet.
M02-09-00: Test magnet with telescoping handle.
XR2B: Detector removal tool. Allows the installation and/or removal of the detector heads from the bases in high ceiling applications.
XP-4: Extension pole for XR2B. Shipped with three, 5-foot (1.524,m) sections.

DIVISION OF THE STATE ARCHITECT

IDENTIFICATION STAMP
DIV. OF THE STATE ARCHITECT
APP: 03-124589 INC:
REVIEWED FOR
SS ☑ FLS ☑ ACS ☑
DATE: 04/15/2025

VENTURA COUNTY COMMUNITY COLLEGE DISTRICT
MOORPARK OXNARD VENTURA

VENTURA COUNTY COMMUNITY COLLEGE DISTRICT
761 EAST DAILY DRIVE
CAMARILLO, CALIFORNIA 93010
TEL: (805) 652-5500

PROJECT TITLE AND SCHOOL LOCATION

VENTURA COMMUNITY COLLEGE STEM MODULAR BUILDING
VENTURA COMMUNITY COLLEGE
4667 TELEGRAPH RD.
VENTURA, CA 93003

COMMISSIONED ARCHITECT

AMADOR

amador whittle architects, inc.
28328 AGOURA RD, 203 | AGOURA HILLS CA, 91301 | 805-558-4334

CONSULTANT

LUCCI & ASSOCIATES INC.
CONSULTING ELECTRICAL ENGINEERS
3251 CORTE MALPASO, #611
CAMARILLO, CA 93012-8094
(805) 389-6520 FAX (805) 389-6519

LUCCI & ASSOCIATES, INC. reserve their commonlaw copyright and other property rights in these plans. These plans and drawings are not to be reproduced, changed, or copied in any form or manner whatsoever without first obtaining the expressed written permission and consent of LUCCI & ASSOC. INC nor are they to be assigned to any third party without obtaining said written permission and consent.

STAMPS/SEALS

REGISTERED PROFESSIONAL ENGINEER
KENNETH W. LUCCI
No. E 8310
Exp. 09/30/2026
ELECTRICAL
STATE OF CALIFORNIA

LICENSED ARCHITECT
WILLIAM JORGE AMADOR
C-20348
JANUARY 31, 2027
RENEWAL DATE
STATE OF CALIFORNIA

DSA V3 SUBMITTAL 03/21/2025

SHEET TITLE:

FIRE ALARM DATA SHEETS

PROJECT NO.: 22-VCCCD-08	PROJECT ARCH: Designer
DRAWN: LK/DS/IT	CHECKED: KL

SHEET NUMBER:

E508

DATE: 12/20/24 SHEET: ___ OF ___

DRAFTER: CM02 DRAWING FILENAME: 22-539E508 PATHNAME: G:\22\539\ELS\Sheets DATE: 20 December 2024 TIME: 3:34 pm

Copyright Lucci and Associates Consulting Electrical Engineers. Deviations from this drawing will not be made without their expressed written permission.

L.A.I.# 22-539 PAPER SIZE 42"x30"

CALIFORNIA DEPARTMENT OF FORESTRY & FIRE PROTECTION
OFFICE OF THE STATE FIRE MARSHAL
FIRE ENGINEERING - BUILDING MATERIALS LISTING PROGRAM

LISTING SERVICE

LISTING No. 7320-1653:0505

CATEGORY: 7320 -- SPEAKERS

LISTEE: System Sensor, Unincorporated Div of Honeywell Int'l Inc.3825 Ohio Ave, St. Charles, IL 60174
Contact: Lisa Brant (203) 484-6105 Fax (203) 484-7309
Email: lisa.brant@honeywell.com

DESIGN: System Sensor Indoor Models:
SPRL and SPWL Wall Speakers;
SPCRL and SPCWL Ceiling Speakers;
SPSRL, SPSWL, SPSRL-P, SPSRL-SP, SPSWL-P, SPSWL-ALERT and SPSWL-CLR-ALERT Wall Speaker Stobes;
SPSCRL, SPSCWL, SPSCWL-P, SPSCWL-SP and SPSCWL-CLR-ALERT Ceiling Speaker Strobes.

Wall Bezel Parts:
BZSPR-P, BZSPR-AL, BZSPR-EV, BZSPR-AG, BZSPR-PG, BZSPR-F and BZSPR-SP, BZSPW-P, BZSPW-AL, BZSPW-EV, BZSPW-AG, BZSPW-PG, BZSPW-F and BZSPW-SP,

Ceiling Bezel Parts:
BZSPRC-P, BZSPRC-AL, BZSPRC-EV, BZSPRC-AG, BZSPRC-PG, BZSPRC-F and BZSPRC-SP,
BZSPWC-P, BZSPWC-AL, BZSPWC-EV, BZSPWC-AG, BZSPWC-PG, BZSPWC-F and BZSPWC-SP,

WallTrim Rings for Speaker Strobes:
TR2 and TR2W

CeilingTrim Rings for Speaker Strobes:
TRC2 and TRC2W.

Wall Surface Mounted Back Boxes:
SBBSPRL and SBBSPWL,

Ceiling Surface Mounted Back Boxes:
SBBCRL and SBBCWL

Refer to listee's data sheet for detailed product description and operational considerations.

02-27-17 gt

This listing is based upon technical data submitted by the applicant. CSFM Fire Engineering staff has reviewed the test results and/or other data but does not make an independent verification of any claims. This listing is not an endorsement or recommendation of the item listed. This listing should not be used to verify correct operational requirements or installation criteria. Refer to listee's data sheet, installation instructions and/or other

Date Issued: **July 01, 2022** *Listing Expires* **June 30, 2023**

Authorized By: ***VICTOR WONG**, Program Coordinator*
Fire Engineering Division

RATING: 25 or 70.7 VAC, 1/4, 1/2, 1, 2 Watt outputs.
Regulated 12 VDC and 24 VDC/FWR is for 2-wire strobe portion.

INSTALLATION: In accordance with listee's printed installation instructions, NFPA 72, applicable codes & ordinances and in a manner acceptable to the authority having jurisdiction.

MARKING: Listee's name, model number, electrical rating, and UL label.

APPROVAL: Listed as speakers and speaker-strobes when used with separately listed compatible fire alarm control units. Suitable for indoor use, dry and damp environments. *Listed with software code, S05-0048-001 for low temperature compensation. Authority having jurisdiction should be consulted prior to installation. Refer to listee's Installation Instruction Manual for details.

02-27-17 gt

This listing is based upon technical data submitted by the applicant. CSFM Fire Engineering staff has reviewed the test results and/or other data but does not make an independent verification of any claims. This listing is not an endorsement or recommendation of the item listed. This listing should not be used to verify correct operational requirements or installation criteria. Refer to listee's data sheet, installation instructions and/or other

Date Issued: **July 01, 2022** *Listing Expires* **June 30, 2023**

Authorized By: ***VICTOR WONG**, Program Coordinator*
Fire Engineering Division

ULC Current Draw Data

ULC Max Strobe Current Draw (mA RMS)			
	8 to 17.5 Volts	16 to 33 Volts	
Candela	**DC**	**DC**	**FWR**
15	88	43	60
30	143	63	83
75	N/A	107	136
95	N/A	121	155
110	N/A	148	179
135	N/A	172	209
185	N/A	222	257

Sound Output Speaker Strobe				
	¼ W	**½ W**	**1 W**	**2 W**
Anechoic (dBA @10 ft)	77	80	83	86

Sound Output Speaker				
	¼ W	**½ W**	**1 W**	**2 W**
Anechoic (dBA @10 ft)	79	82	85	88

L-Series Dimensions

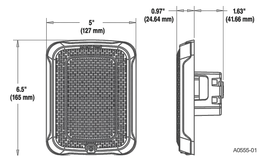

Wall-Mount Speaker

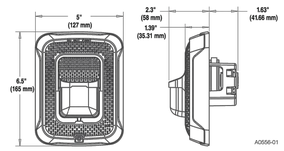

Wall-Mount Speaker Strobe

Surface Mounting

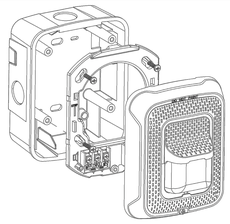

Wall-Mount Speaker Strobe
with SBBSPRL/ SBBSPWL Surface Mount Back Box

Ordering Information for L-Series Speakers and Speaker Strobes

Wall Mount		
White	**Red**	**Description**
SPWLA	SPRLA	Speaker only, Plain
SPSWLA	SPSRLA	Speaker Strobe, Bilingual
SPSWLA-P	SPSRLA-P	Speaker Strobe, Plain

Accessories		
White	**Red**	**Description**
RFPW	RFP	7 in × 9.5 in Retrofit Plate
SBBSPWL	SBBSPRL	Surface Mount Back Box for Speakers and Speaker Strobes
TR-2W	TR-2	Wall Mount Trim Ring

For strobe models, add suffix -E for English only, -F for French only.

6581 Kitimat Rd., Unit 6 • Mississauga, Ont.
Phone: 800-SENSOR2 • Fax: 905-812-0771
www.systemsensor.ca

©2018 System Sensor.
Product specifications subject to change without notice. Visit systemsensor.ca for current product information, including the latest version of this data sheet.

Indoor Selectable-Output Speaker Strobes and Dual Voltage Evacuation Speakers for Wall Applications

System Sensor L-Series selectable output speaker strobes and dual-voltage evacuation speakers can reduce ground faults and enable faster installation with lower current draw and modern aesthetics.

Features

- Plug-in design and protective cover reduce ground faults
- Universal mounting plate with an onboard shorting spring tests wiring continuity before installation
- No extension ring required
- Field selectable candela settings on wall units: 15, 30, 75, 95, 110, 135, 185
- Automatic selection of 12- or 24-volt operation at 15 and 30 candela
- Rotary switch simplifies field selection of speaker voltage (25 and 70.7 Vrms) and power settings (¼, ½, 1 and 2 watts)
- Seakers offer high fidelity and high volume sound output
- Compatible with System Sensor synchronization protocol
- Electrical compatibility with existing SpectrAlert and SpectrAlert Advance products
- Tamper-resistant construction
- Updated modern aesthetics

Agency Listings

UL LISTED S4048

FM APPROVED
FM approved except for ALERT models 3057483

The System Sensor L-Series of speakers and speaker strobes reduce costly ground faults using a plug-in design and universal mounting plate that allow the installer to pre-wire mounting plates, dress the wires, and confirm wiring continuity befcre plugging in the speakers. In addition, a protective plastic cover prevents nicked wires by covering exposed speaker components.

These devices also enable faster installations by providing instant feedback to ensure that wiring is properly connected, rotary switches to select voltage and power settings, and 7 field-selectable candela settings for wall speaker strobes.

The low total harmonic distortion of the speaker offers high fidelity sound output while still offering high volume sound output for use in high ambient noise applications.

System Sensor L-Series makes installation easy

- Attach a universal mounting plate to a 4 × 4 × 2⅛ inch back box. Flush-mount applications do not require an extension ring.
- Connect the notification appliance circuit or speaker wiring to the terminals on the mounting plate.
- Attach the speaker or speaker strobe to the mounting plate by inserting the product tabs into the mounting plate grooves. Hinge the device into position to lock the product pins into the mounting plate terminals. The device will temporarily hold in place with a catch until it is secured with a captured mounting screw.

L-Series Speaker and Speaker Strobe Specifications

Architectural/Engineering Specifications

General
L-Series speaker and speaker strobes shall mount to a 4 × 4 × 2⅛-inch back box. A universal mounting plate shall be used for mounting ceiling and wall products. The notification appliance circuit and amplifier wiring shall terminate at the universal mounting plate. Also, L-Series speaker strobes, when used with the Sync•Circuit™ Module accessory, shall be powered from a non-coded notification appliance circuit output and shall operate on a nominal 12 or 24 volts. When used with the Sync•Circuit Module, 12-volt rated notification appliance circuit outputs shall operate between 8.5 and 17.5 volts; 24-volt rated notification appliance circuit outputs shall operate between 16.5 and 33 volts. Indoor L-Series products shall operate between 32°F and 120°F (0°C and 49°C) from a regulated DC, or full-wave rectified, unfiltered power supply. Wall-mount speaker strobes shall have field-selectable candela settings including 15, 30, 75, 95, 110, 135, 185.

Speaker
The speaker shall be a System Sensor L-Series model _____ dual-voltage transformer speaker capable of operating at 25.0 or 70.7 nominal Vrms. It should be ULC listed. The speaker shall have a frequency range of 400 to 4,000 Hz and shall have an operating temperature between 32°F and 120°F (0°C and 49°C). The speaker shall have power taps and voltage that are selected by rotary switches.

Speaker Strobe combination
The speaker strobe shall be a System Sensor L-Series model _____ and ULC listed. The speaker shall be capable of operating at 25.0 or 70.7 nominal Vrms selected via rotary switch, and shall have a frequency range of 400 to 4,000 Hz. The speaker shall have power taps that are selected by rotary switch. The strobe shall comply with the NFPA 72 requirements for visible signaling appliances, flashing at 1 Hz over the strobe's entire operating voltage range. The strobe light shall consist of a xenon flash tube and associated lens/reflector system.

Synchronization Module
The module shall be a System Sensor Sync•Circuit model MDL3RA or MDL3WA and ULC listed. The module shall synchronize strobes at 1 Hz. The module shall mount to a 4 11/16 × 4 11/16 × 2⅛-inch back box. The module shall also control two Style Y (class B) circuits or one Style Z (class A) circuit. The module shall synchronize multiple zones. Daisy chaining two or more synchronization modules together will synchronize all the zones they control. The module shall not operate on a coded power supply.

Physical Specifications			
Operating Temperature	32°F to 120°F (0°C to 49°C)		
Humidity Range	10 to 93% non-condensing		
Dimensions, Wall-Mount	**Length**	**Width**	**Depth**
SPL Speaker	6.5 in, 165 mm	5 in, 127 mm	0.97 in, 24.64 mm
With Surface Mount Back Box	6.6 in, 168 mm	5.1 in, 130 mm	3.2 in, 82 mm
SPSL Speaker/Strobe (including lens and speaker)	6.5 in, 165 mm	5.0 in, 127 mm	2.3 in, 58 mm
With Surface Mount Back Box	6.6 in, 168 mm	5.1 in, 130 mm	4.55 in, 116 mm

*When using 12AWG, 14 AWG, or adding extra wires in the box, a deeper box or extension ring is recommended.

Electrical/Operating Specifications	
Nominal Voltage (speakers)	25 or 70.7 (nominal)
Maximum Supervisory Voltage (speakers)	50 VDC
Strobe Flash Rate	1 flash per second
Nominal Voltage (strobes)	Regulated 12 VDC or regulated 24 DC/FWR[1,2]
Operating Voltage Range (includes fire alarm panels with built in sync)	8 to 17.5 V (12 V nominal) or 16 to 33 V (24 V nominal)
Operating Voltage with MDL3 Sync Module	8.5 to 17.5 V (12 V nominal) or 16.5 to 33 V (24 V nominal)
Frequency Range	400 to 4000 Hz
Power	¼, ½, 1, 2 watts

1. Full Wave Rectified (FWR) voltage is a non-regulated, time-varying power source that is used on some power supply and panel outputs.
2. Strobe products will operate at 12 V nominal only for 15 and 30 cd.

DIVISION OF THE STATE ARCHITECT

IDENTIFICATION STAMP
DIV. OF THE STATE ARCHITECT
APP: 03-124589 INC:
REVIEWED FOR
SS ☑ FLS ☑ ACS ☑
DATE: 04/15/2025

VENTURA COUNTY COMMUNITY COLLEGE DISTRICT
761 EAST DAILY DRIVE
CAMARILLO, CALIFORNIA 93010
TEL: (805) 652-5500

PROJECT TITLE AND SCHOOL LOCATION

VENTURA COMMUNITY COLLEGE STEM MODULAR BUILDING
VENTURA COMMUNITY COLLEGE
4667 TELEGRAPH RD.
VENTURA, CA 93003

COMMISSIONED ARCHITECT

AMADOR
amador whitte architects, inc.
28328 AGOURA RD, 203 | AGOURA HILLS CA, 91301 | 805-558-4334

CONSULTANT

LUCCI & ASSOCIATES INC.
CONSULTING ELECTRICAL ENGINEERS
3251 CORTE MALPASO, #511
CAMARILLO, CA 93012-8094
(805) 389-6520 FAX (805) 389-6519

LUCCI & ASSOCIATES, INC. reserve their commonlaw copyright and other property rights in these plans. These plans and drawings are not to be reproduced, changed, or copied in any form or manner whatsoever without first obtaining the expressed written permission and consent of LUCCI & ASSOC. INC nor are they to be assigned to any third party without obtaining said written permission and consent.

STAMPS/SEALS

REGISTERED PROFESSIONAL ENGINEER
BENJAMIN W. LUCCI
No. E 8340
Exp. 09/30/2026
ELECTRICAL
STATE OF CALIFORNIA

LICENSED ARCHITECT
WILLIAM JORGE AMADOR
C-20348
JANUARY 31, 2027
RENEWAL DATE
STATE OF CALIFORNIA

DSA V3 SUBMITTAL 03/21/2025

SHEET TITLE:

FIRE ALARM DATA SHEETS

PROJECT NO: 22-VCCCD-08	PROJECT ARCH: Designer
DRAWN: LK/DS/IT	CHECKED: KL

SHEET NUMBER:

E509

DATE: 12/20/24 SHEET: ___ OF ___

Copyright Lucci and Associates Consulting Electrical Engineers. Deviations from this drawing will not be made without their expressed written permission.

L.A.I.# 22-539 PAPER SIZE 42"x30"

DATE: 20 December 2024 TIME: 3:34 pm
DRAFTER: CM02 DRAWING FILENAME: 22-539E509 PATHNAME: G:\22\539\EL\Sheets

CALIFORNIA DEPARTMENT OF FORESTRY & FIRE PROTECTION
OFFICE OF THE STATE FIRE MARSHAL
FIRE ENGINEERING - BUILDING MATERIALS LISTING PROGRAM

LISTING SERVICE

LISTING No. 7320-1653:0201

CATEGORY: 7320 -- SPEAKERS

LISTEE: System Sensor, Unincorporated Div of Honeywell Int'l Inc.3825 Ohio Ave, St. Charles, IL 60174
Contact: Lisa Brant (203) 484-6105 Fax (203) 484-7309
Email: lisa.brant@honeywell.com

DESIGN: Models SPR,SPW,SPRV, and SPWV SpectrAlert Speakers - Rectangular enclosure. Models SPCW, SPCR, SPCWV, and SPCRV SpectrAlert Speakers with round enclosure. Models SPSR, SPSRH, SPSW, SPSW-ALERT, SPSW-CLR-ALERT, *SPSWK-CLR-ALERT, SPSWH, SPSRV, and SPSWV SpectrAlert Speaker/Strobe with rectangular enclosure. Models SPSCR, SPSCRH, SPSCW, *SPSCWK-CLR-ALERT, SPSCWH, SPSCRV, SPSCRVH, SPSCWV, and SPSCWVH SpectrAlert Speaker/Strobe with round enclosure. Model SPSCW-CLR-ALERT Speaker/Strobe. Model SPSW-ALERT has amber lens and is intended for non-fire use.
All models identified are intended for indoor use mounted on the wall or ceiling. Models with a "K" in the suffix are suitable for indoor or outdoor use with an operating temperature rating of -40°C to +66°C (-40°F to +151°F) and have a NEMA 4X enclosure rating when used with models PWBB, PWBBW (wall) or the model PWBBCW (ceiling) plastic weatherproof back boxes or with Model MWBBW (Wall), MWBB (Wall) or MWBBCW (Ceiling) metal weatherproof back boxes. Models with a "- P" in the suffix have plain housings with no lettering on the enclosure. Models not containing "- P", in the suffix have English lettering reading "FIRE" on the housing. Refer to listee's data sheet for additional detailed product description and operational considerations.

RATING: Nominal Voltage: 25 Vrms or 70 Vrms
Power Settings: ¼, ½, 1, 2 Watts
Frequency Range: 400 - 4000 Hz

INSTALLATION: In accordance with listee's printed installation instructions, NFPA 72, applicable codes & ordinances and in a manner acceptable to the authority having jurisdiction.

MARKING: Listee's name, model number, electrical rating and UL label.

APPROVAL: Listed as speaker/strobes when used with separately listed compatible fire alarm control units. Suitable for wall or ceiling mount.
These speaker/strobes do not generate a distinctive three-pulse temporal code pattern (for total evacuation) as required per NFPA 72, 2010 edition. If required, the appliances must be used with a fire alarm control unit that can generate the temporal pattern signal.

*Corrected 02-06-12 bh

This listing is based upon technical data submitted by the applicant. CSFM Fire Engineering staff has reviewed the test results and/or other data but does not make an independent verification of any claims. This listing is not an endorsement or recommendation of the item listed. This listing should not be used to verify correct operational requirements or installation criteria. Refer to listee's data sheet, installation instructions and/or other

Date Issued: **July 01, 2022** *Listing Expires* **June 30, 2023**

Authorized By: ***VICTOR WONG**, Program Coordinator*
Fire Engineering Division

dn-60323:c1

SpectrAlert® Advance

Outdoor Selectable Output Speaker Strobes and Dual Voltage Evacuation Speakers

NOTIFIER® by Honeywell

Audio/Visual Devices

General

The SpectrAlert Advance series offers the broadest line of outdoor speakers and speaker strobes in the industry. From metal and plastic outdoor back boxes, to white and red plastic housings, to wall and ceiling mounting options, virtually every application is covered. SpectrAlert Advance outdoor speakers and speaker strobes offer reliable operation over the entire temperature range of -40°F to 151°F. They may be used indoors or outdoors in wet or dry applications. In addition, these speakers provide a broad frequency response range and low harmonic distortion to provide an accurate and intelligible broadcast of evacuation messages. High sound pressure level at all tap settings ensures that messages are clearly heard.

The plug-in design allows the installer to pre-wire mounting plates and dress the wires before plugging in the speakers to help reduce ground faults. This design also allows faster installations with instant feedback to ensure that wiring is properly connected, rotary switches to select voltage and power settings, and field selectable candela settings for wall and ceiling speaker strobes.

The new weatherproof back boxes have plastic and metal versions. They are now designed to accommodate in-and-out wiring for daisy chaining outdoor devices. The plastic weatherproof back boxes shipped with the product feature removable side flanges and improved resistance to salt water corrosion. The screw hole knockouts located on the back of the weatherproof back box eliminate the need to drill holes for screw-in mounting. Both weatherproof back boxes are available with 3/4 inch top and bottom conduit entries and 3/4 inch knock-outs at the back. Included with each back box is a screw-in NPT plug with an O-ring gasket for a watertight seal. Metal back boxes are available separately.

Features

- Plug-in design
- Electrical compatibility with existing SpectrAlert products
- Shorting spring on mounting plate tests continuity before installation
- Rotary switch simplifies field selection of speaker voltage and power settings
- Universal mounting plate for wall- and ceiling-mount units
- Weatherproof per NEMA 4x, IP56
- Compatible with System Sensor synchronization protocol
- Automatic selection of 12 or 24-volt operation at 15 and 15/75 candela
- Field selectable candela settings on wall and ceiling units
- Ceiling and wall mount application

Agency Listings and Approvals

In some cases, certain modules may not be listed by certain approval agencies, or listing may be in progress. *Consult factory for latest listing status.*

- **UL/ULC Listed:** S4048
- **MEA:** 10-08-E
- **CSFM:** 7320-1653:201

Specifications

PHYSICAL SPECIFICATIONS

Operating Temperature: -40°F to 151°F (-40°C to 66°C)

DIMENSIONS

Dimensions, Wall-Mount:
- SPS Speaker Strobe: 6.0"L x 5.0"W x 4.7"D (including lens and speaker)
- SP Speaker: 6.0"L x 5.0"W x 2.9"D

Dimensions, Ceiling-Mount:
- SPS Speaker Strobe: 6.8" in Diameter x 4.7"D (including lens and speaker)
- SP Speaker: 6.8" in Diameter x 2.9"D

Dimensions, Wall-Mount Weatherproof Backbox
- 6.5"L x 5.5"H x 2.9"D

Dimensions, Ceiling-Mount Weatherproof Backbox
- 7.2"Dia x 29"H

ELECTRICAL/OPERATING SPECIFICATIONS

Nominal Voltage (speakers): 25 Volts or 70.7 Volts (nominal)

Maximum Supervisory Voltage (speakers): 50VDC

Strobe Flash Rate: 1 flash per second

Nominal Voltage (Strobes): Regulated 12VDC/FWR or 24VDC/FWR

Operating Voltage Range (includes fire panels with built-in sync): 8 to 17.5V (12V nominal) or 16 to 33V (24 nominal)

Operating Voltage with MDL Sync Module:
9 to 17.5V (12V nominal) or 17 to 33V (24V nominal)

Frequency Range: 400 to 4000Hz

Power: ¼, ½, 1, 2 watts

Sound Output				
UL Reverberant (dBA @ 10ft)	2W	1W	½W	¼W
Outdoor Speaker	90	87	84	81
Outdoor Speaker/Speaker Strobe	89	86	83	80

UL Maximum Strobe Current Draw (mA RMS)

	Candela	8 to 17.5 Volts		16 to 33 Volts	
		DC	FWR	DC	FWR
Standard Candela Range	15	123	128	66	71
	15/75	142	148	77	81
	30	NA	NA	94	96
	75	NA	NA	158	153
	95	NA	NA	181	176
	110	NA	NA	202	195
	115	NA	NA	210	205
High Candela Range	135	NA	NA	228	207
	150	NA	NA	246	220
	177	NA	NA	281	251
	185	NA	NA	286	258

Candela Derating

NOTE: *For K series products used at low temperatures, listed candela ratings must be reduced in accordance with this table.*

Strobe Output (cd)	
Listed Candela	Candela Rating at -40°F
15	Do not use below 32°F
15/75	
30	
75	44
95	70
110	110
115	115
135	135
150	150
177	177
185	185

Architectural/Engineering Specifications

GENERAL

SpectrAlert Advance outdoor speaker and speaker strobes shall mount to a weatherproof back box. A universal mounting plate shall be used for mounting ceiling and wall products. The notification appliance circuit and amplifier wiring shall terminate at the universal mounting plate. Also, SpectrAlert Advance speaker strobes, when used with the SyncCircuit™ Module accessory, shall be powered from a non-coded notification appliance circuit output and shall operate on a nominal 12 or 24 volts. When used with the Sync•Circuit Module, 12-volt rated notification appliance circuit outputs shall operate between 9 and 17.5 volts; 24-volt rated notification appliance circuit outputs shall operate between 17 and 33 volts. Outdoor SpectrAlert Advance products shall operate between –40°F and 151°F from a regulated DC, or full-wave rectified, unfiltered power supply.

SPEAKER

The Speaker shall be a System Sensor SpectrAlert Advance Model dual voltage transformer speaker capable of operating at 25.0 or 70.7 nominal Vrms. It shall be listed to UL/ULC Standard S4048 for outdoor fire protective signaling systems. It shall have a frequency range of 400 to 4000 Hz and shall have an operating temperature from –40°F to 150.8°F. It shall have power taps and wattage settings which are selected by rotary switches. The speaker must be installed with its weatherproof backbox in order to remain outdoor approved per UL/ULC listing S4048. The speaker shall be suitable for use in air handling spaces, as well as wet environments.

SPEAKER STROBE COMBINATION

The Speaker Strobe shall be a System Sensor Model listed to UL/ULC 1638 and UL/ULC 1480 and be approved for fire protective signaling systems. It shall be capable of operating at 25.0 or 70.7 nominal Vrms, and shall have a frequency range of 400 to 4000 Hz. It shall have power taps that are selected by rotary switch. The strobe shall consist of a xenon flash tube with associated lens/reflector system and operate on either 12V or 24V. The strobe shall also feature selectable candela output, providing options for 15 or 15/75 candela when operating on 12V and 15, 15/75, 30, 75, 110, 115, 135, 150, 177 or 185 when operating on 24V. The strobe shall comply with the Americans with Disabilities Act requirement for visible signaling appliances, flashing at 1 Hz over the strobe's entire operating voltage range. The speaker strobe must be installed with its weatherproof back box in order to remain outdoor approved per UL/ULC. The speaker strobe shall be suitable for use in wet environments.

Product Line Information

NOTE: *"A" suffix indicates ULC-Listed model.*
NOTE: *All outdoor models ("K(A)" suffix), include weatherproof backbox.*
NOTE: *Add "R" to outdoor models for weatherproof replacement device (no backbox included).*

SPWK(A): Wall mount outdoor speaker; white.

SPRK(A): Wall mount outdoor speaker; red.

SPSWK: Wall mount outdoor speaker strobe, selectable candela (15, 15/75, 30, 75, 95, 110, 115); white.

SPSRK: Wall mount outdoor speaker strobe, selectable candela (15, 15/75, 30, 75, 95, 110, 115); red.

SPCWK: Ceiling mount outdoor speaker; white.

SPSCWK: Ceiling mount outdoor speaker strobe, selectable candela (15, 15/75, 30, 50, 75, 95, 110, 115); white.

SPSCWHK: Ceiling mount outdoor speaker strobe, selectable candela, high cd (135, 150, 177, 185); white.

ACCESSORIES

MWBB(A): Wall, metal weatherproof backbox; red.

MWBBW(A): Wall, metal weatherproof backbox; white.

MWBBCW(A): Ceiling, metal weatherproof backbox; white.

WTP-SP: Flush mount weatherproof plate for use with speakers/speaker strobes, red.

WTP-SPW: Flush mount weatherproof plate for use with speakers/speaker strobes, white.

System Sensor® is a registered trademark of Honeywell International Inc.
©2011 by Honeywell International Inc. All rights reserved. Unauthorized use of this document is strictly prohibited.

ISO 9001 CERTIFIED ENGINEERING & MANUFACTURING QUALITY SYSTEMS

This document is not intended to be used for installation purposes.
We try to keep our product information up-to-date and accurate.
We cannot cover all specific applications or anticipate all requirements.
All specifications are subject to change without notice.

Made in the U.S. A.

For more information, contact Notifier. Phone: (203) 484-7161, FAX: (203) 484-7118.
www.notifier.com

DIVISION OF THE STATE ARCHITECT

IDENTIFICATION STAMP
DIV. OF THE STATE ARCHITECT
APP: 03-124589 INC:
REVIEWED FOR
SS ☑ FLS ☑ ACS ☑
DATE: 04/15/2025

VENTURA COUNTY COMMUNITY COLLEGE DISTRICT
MOORPARK OXNARD VENTURA

VENTURA COUNTY COMMUNITY COLLEGE DISTRICT
761 EAST DAILY DRIVE
CAMARILLO, CALIFORNIA 93010
TEL: (805) 652-5500

PROJECT TITLE AND SCHOOL LOCATION

VENTURA COMMUNITY COLLEGE STEM MODULAR BUILDING
VENTURA COMMUNITY COLLEGE
4667 TELEGRAPH RD.
VENTURA, CA 93003

COMMISSIONED ARCHITECT

AMADOR

amador whittle architects, inc.
28328 AGOURA RD, 203 | AGOURA HILLS CA, 91301 | 805-558-4334

CONSULTANT

LUCCI & ASSOCIATES INC.
CONSULTING ELECTRICAL ENGINEERS
3261 CORTE MALPASO, #611
CAMARILLO, CA 93012-8094
(805) 389-6520 FAX (805) 389-6519

LUCCI & ASSOCIATES, INC. reserve their commonlaw copyright and other property rights in these plans. These plans and drawings are not to be reproduced, changed, or copied in any form or manner whatsoever without first obtaining the expressed written permission and consent of LUCCI & ASSOC. INC nor are they to be assigned to any third party without obtaining said written permission and consent.

STAMPS/SEALS

REGISTERED PROFESSIONAL ENGINEER
KENNETH W. LUCCI
No. E 8340
Exp. 09/30/2026
ELECTRICAL
STATE OF CALIFORNIA

LICENSED ARCHITECT
WILLIAM BRUCE AMADOR
C-20348
JANUARY 31, 2027
RENEWAL DATE
STATE OF CALIFORNIA

DSA V3 SUBMITTAL 03/21/2025

SHEET TITLE:
FIRE ALARM DATA SHEETS

PROJECT NO: 22-VCCCD-08 | PROJECT ARCH: Designer
DRAWN: LK/DS/IT | CHECKED: KL
SHEET NUMBER:
E510
DATE: 12/20/24 | SHEET: ___ OF ___

Copyright Lucci and Associates Consulting Electrical Engineers. Deviations from this drawing will not be made without their expressed written permission.

L.A.I.# 22-539 PAPER SIZE 42"x30"

DATE: 20 December 2024 TIME: 3:34 pm
PATHNAME: G:\22\539\EL\Sheets
DRAWING FILENAME: 22-539E510
DRAFTER: CM02

B1730

CHRISTY®

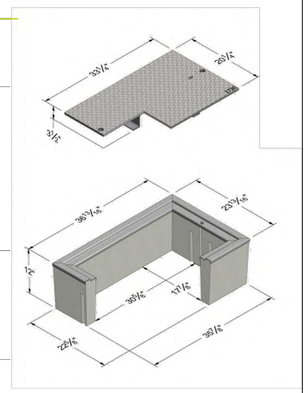

COVER

Style:	Flush
Material:	Steel Checker Plate
Model:	20" x 33"
Weight:	111 lbs
Options:	Special Markings
Surface:	Skid Resistant & Marked*
Coefficient of Friction:	>0.6 ASTM 1028
Performance:	H20, AASHTO M309

Cover comes standard with permanent markings for manufacturer, load rating, model size and manufacturing location.

BODY

Material:	Reinforced Concrete with Steel Frame
Model:	24" x 37"
Weight:	268 lbs
Wall Type:	Straight
Mouseholes:	0
Performance:	H20, AASHTO M309

COVER

Bolt Down Locking
Galvanizing
Power or Com Marker

LOAD RATING / NOTES

TRAFFIC RATED
AASHTO H20

Actual load rating is determined by the box and cover combination.

WARNING: Cancer and Reproductive Harm - www.P65Warnings.ca.gov

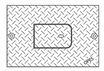

Reader Door Detail

All information contained on this sheet is current at the time of publication.
Oldcastle reserves the right to discontinue or update product information without notice.

Revision 12/06/18
© 2018 Oldcastle Infrastructure

Oldcastle Infrastructure
A CRH COMPANY
oldcastleinfrastructure.com
(800) 735-5566

CHRISTY PULL BOX DETAIL

SCALE: NONE

6 - E601 -

NOT USED

SCALE: NONE

3 - E601 -

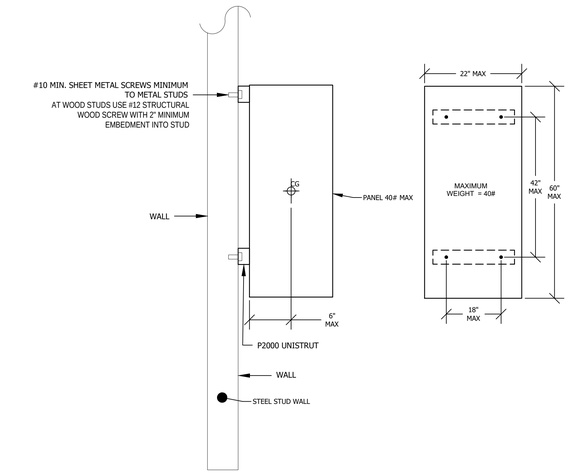

SIDE VIEW

FRONT VIEW

PANELBOARD, FIRE ALARM OR IDF PANEL ANCHORAGE METAL STUD WALL - SURFACE

SCALE: NONE

2 - E601 -

STEEL STUD

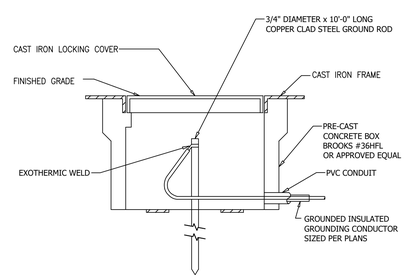

GROUND WELL DETAIL

SCALE: NONE

5 - E601 -

DETAIL NOTES:

1. ALL CONDUITS TO BE PROVIDED WITH LABELED METERED 3/16 PULLSTRINGS OR MULE TAPE THEIR ENTIRE LENGTH.
2. ALL CONDUITS BENDS SHALL BE FACTORY BENDS WITH MINIMUM 12 TIMES DIAMETER BEND RADIUS.
3. ALL FEEDERS TO BE PER ELECTRICAL SINGLE LINE.

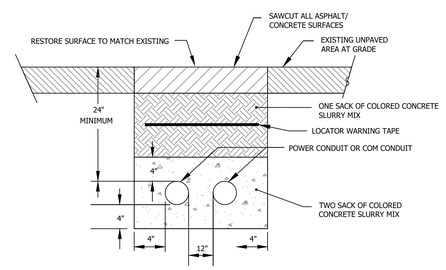

DUCTBANK SECTION

SCALE: NTS TYPICAL POWER & COM

4 - E601 -

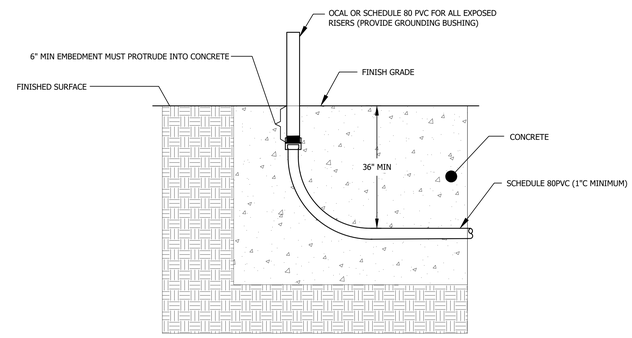

CONDUIT PENETRATION DETAIL

SCALE: NONE

1 - E601 -

DIVISION OF THE STATE ARCHITECT

IDENTIFICATION STAMP
DIV. OF THE STATE ARCHITECT
APP: 03-124589 INC:
REVIEWED FOR
SS ☑ FLS ☑ ACS ☑
DATE: 04/15/2025

VENTURA COUNTY COMMUNITY COLLEGE DISTRICT
761 EAST DAILY DRIVE
CAMARILLO, CALIFORNIA 93010
TEL: (805) 652-5500

PROJECT TITLE AND SCHOOL LOCATION

VENTURA COMMUNITY COLLEGE STEM MODULAR BUILDING
VENTURA COMMUNITY COLLEGE
4667 TELEGRAPH RD.
VENTURA, CA 93003

COMMISSIONED ARCHITECT

AMADOR
amador whittle architects, inc.
28328 AGOURA RD, 203 | AGOURA HILLS CA. 91301 | 805-558-4334

CONSULTANT

LUCCI & ASSOCIATES INC.
CONSULTING ELECTRICAL ENGINEERS
3251 CORTE MALPASO, #511
CAMARILLO, CA 93012-8094
(805) 389-6520 FAX (805) 389-6519

LUCCI & ASSOCIATES, INC. reserve their commonlaw copyright and other property rights in these plans. These plans and drawings are not to be reproduced, changed, or copied in any form or manner whatsoever without first obtaining the expressed written permission and consent of LUCCI & ASSOC. INC nor are they to be assigned to any third party without obtaining said written permission and consent.

STAMPS/SEALS

REGISTERED PROFESSIONAL ENGINEER
KENNETH W. KLEIN
NO. E 8340
Exp. 09/30/2026
ELECTRICAL
STATE OF CALIFORNIA

LICENSED ARCHITECT
WILLIAM JORGE AMADOR
C-20348
JANUARY 31, 2027
RENEWAL DATE
STATE OF CALIFORNIA

DSA V3 SUBMITTAL 03/21/2025

SHEET TITLE:

ELECTRICAL DETAILS

PROJECT NO.: 22-VCCCD-08	PROJECT ARCH: Designer
DRAWN: LK/DS/IT	CHECKED: KL

SHEET NUMBER:

E601

DATE: 12/20/24 SHEET: ___ OF ___

Copyright Lucci and Associates Consulting Electrical Engineers. Deviations from this drawing will not be made without their expressed written permission.

L.A.I.# 22-539 PAPER SIZE 42"x30"

DRAFTER: CM01 DRAWING FILENAME: 22-539E601 PATHNAME: G:\22\539\ELS\Sheets DATE: 20 December 2024 TIME: 3:34 pm

Drafter: CM01 Page Size: 2.2.3
Dwg: G:\22\539\ELS\Sheets\22-539E601.dwg
Date: 20 December 2024
Time: 3:34 pm
XREF:G:\22\539\ELS\Xrefs\22-539TB.dwg
XREF:G:\22\539\ELS\Xrefs\22-539TB.dwg

Drafter: CM01: G:\22\539\ELS\Sheets\22-539E601.dwg; DATE: DEC 20, 2024, TIME: 2:47 PM

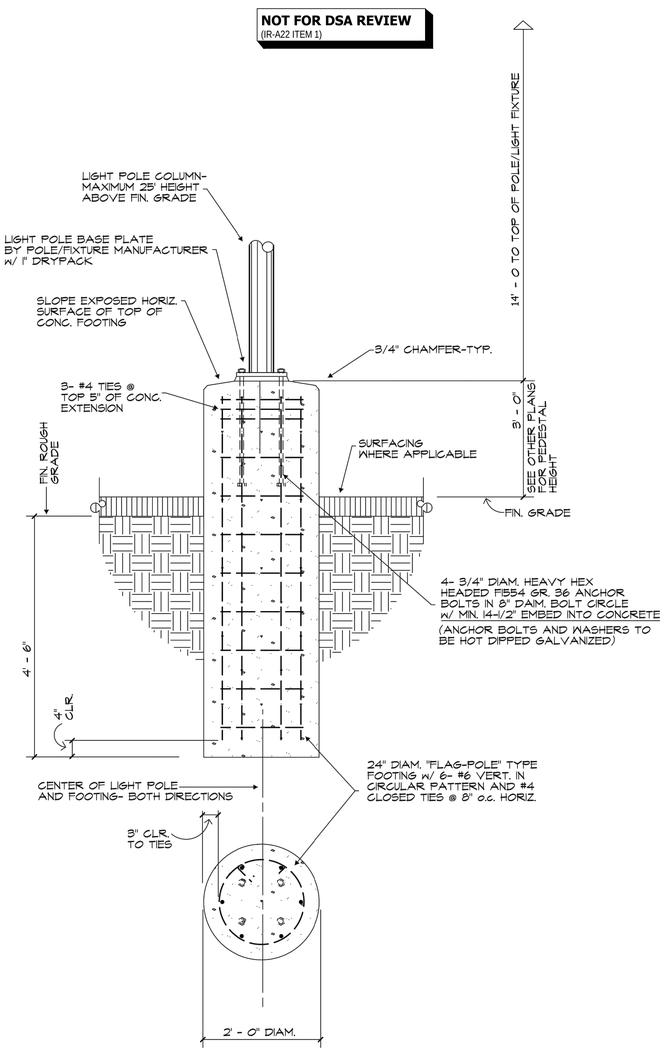

14' HIGH LIGHT POLE - FOOTING DETAIL

SCALE: 3/4" = 1'-0"

2

GENERAL NOTES

GENERAL

1. ALL WORK SHALL CONFORM WITH THE 2022 CALIFORNIA BUILDING CODE, (CBC), AND ALL LOCAL ORDINANCES.
2. THE CONTRACTOR SHALL VERIFY ALL DIMENSIONS AND CONDITIONS PRIOR TO STARTING CONSTRUCTION AND BRING TO THE ATTENTION OF THE ENGINEER ANY DISCREPANCIES OR INCONSISTENCIES.
3. NO STRUCTURAL MEMBER SHALL BE CUT, NOTCHED, BORED OR OTHERWISE WEAKENED EXCEPT AS ALLOWED BY THE CALIFORNIA BUILDING CODE OR APPROVED BY THE ENGINEER.
4. THE ENGINEER SHALL BE NOTIFIED OF ANY UNUSUAL OR UNFORSEEN CONDITION WHICH EFFECTS THE STRUCTURAL STABILITY OF THE BUILDING PRIOR TO CONTINUING WITH CONSTRUCTION. SHOULD ANY CONDITION ARISE WHERE THERE APPEARS TO BE AN ERROR ON THE DRAWINGS OR A DISCREPANCY BETWEEN THE DRAWINGS AND CONDITIONS IN THE FIELD, THE ENGINEER SHALL BE NOTIFIED PRIOR TO CONTINUING WITH THE WORK.
5. IN THE CASE WHERE TWO OR MORE DETAILS APPLYING TO THE SAME PART OF THE WORK ARE IN CONFLICT, THE MOST RESTRICTIVE SHALL GOVERN UNLESS CLARIFIED OR OTHERWISE APPROVED BY THE ENGINEER.
6. REVIEW OF SHOP DRAWINGS MEANS REVIEW OF GENERAL METHOD OF FABRICATION ONLY. DIMENSIONS AND QUANTITIES MAY NOT BE CHECKED. AND REVIEW OF THE SHOP DRAWINGS DOES NOT RELIEVE THE CONTRACTOR FROM COMPLIANCE WITH THE CONSTRUCTION DOCUMENTS UNLESS SPECIFICALLY SO INDICATED IN THE REVIEW.
7. THE ENGINEER HAS NOT BEEN RETAINED FOR SUPERVISION OR INSPECTION DURING CONSTRUCTION, BUT WILL RESOLVE STRUCTURAL ITEMS BROUGHT TO HIS ATTENTION DURING CONSTRUCTION.
8. THE CONTRACTOR SHALL BE RESPONSIBLE FOR ALL SHORING AND BRACING REQUIRED TO PROTECT PERSONNEL AND ADJACENT PROPERTY DURING CONSTRUCTION. THE CONTRACTOR SHALL ADEQUATELY BRACE ELEMENTS OF THE STRUCTURE DURING CONSTRUCTION TO INSURE THE SAFETY OF THE STRUCTURE.

FOUNDATION

1. THERE IS NO SOILS RPORT FOR THIS PROJECT AND AN ASSUMED BEARING VALUE OF 1,000 PSF. (NET), AND PASSIVE VALUE OF 100 PSF/FOOT WITH A 2x INCREASE PER CBC TABLE 1806.2 AND SEC. 1806.3.4, AND A 1/3 INCREASE FOR WIND/SEISMIC HAS BEEN USED IN THE DESIGN OF THE "FLAG POLE" TYPE FOOTINGS.
2. ALL FOOTINGS SHALL BE PLACED IN FIRM UNDISTURBED SOILS-RECOMPACT AS NECESSARY.

CONCRETE

1. ALL CONCRETE UNLESS OTHERWISE SHOWN ON THE PLANS SHALL BE HARDROCK CONFORMING TO ASTM C-94 WITH A MINIMUM COMPRESSIVE STRENGTH AT 28 DAYS OF F'c = 2500 PSI. (SPECIAL INSPECTION NOT REQUIRED DUE TO NATURE OF PROJECT- FLAG POLED FOOTINGS w/ MINOR CONCRETE STRESSES). CONCRETE MAY BE A PEA GRAVEL MIX.
2. AGGREGATE FOR THE CONCRETE SHALL CONFORM TO ASTM C-33, INCLUDING APPENDIX "X1".
3. THE CONTRACTOR SHALL TAKE ADEQUATE PRECAUTIONS FOR MIXING, PLACING, FINISHING, CURING, AND PROTECTING CONCRETE DURING UNFAVORABLE WEATHER CONDITIONS.
4. ALL REINFORCING STEEL SHALL BE NEW STOCK DEFORMED BARS CONFORMING TO ASTM A-615, GRADE 60 EXCEPT#3 BARS MAY BE GRADE 40.. ALL WELDED REINF. STEEL SHALL BE ASTM- A706. ALL BARS SHALL BE FREE OF RUST, GREASE, MILL SCALE OR ANY OTHER MATERIALS WHICH MIGHT AFFECT ITS BOND TO THE CONCRETE ALL BAR BENDS SHALL BE MADE COLD.
5. PROVIDE 3/4" CHAMFER ON ALL EXPOSED CORNERS.
6. ALL REINFORCING STEEL FOR THE "FLAG POLE" TYPE FOOTINGS SHALL BE ONE PIECE. SPLICES ARE NOT ALLOWED EXCEPT AS APPROVED BY THE ENGINEER.
7. REINFORCING BARS SHALL HAVE THE FOLLOWING CONCRETE COVER, (UNLESS NOTED OTHERWISE IN DETAILS):

   CONCRETE POURED AGAINST EARTH.....3 INCHES
   CONCRETE BEAMS AND COLUMNS.....2 INCHES
   CONCRETE SLABS ABOVE GRADE.....1 INCH
8. DRYPACK SHALL BE MIXED IN THE PROPORTIONS OF 1 PART PORTLAND CEMENT TO 2-1/2 PARTS SAND WITH ENOUGH WATER TO PRODUCE A STIFF MIX. DRYPACK SHALL BE THOROUGHLY TAMPED INTO PLACE TO ENSURE A DENSE FINISH, FREE OF VOIDS.
9. THE SLUMP OF THE CONCRETE SHALL BE THE MINIMUM THAT IS PRACTICABLE. WHEN VIBRATORS ARE USED TO CONSOLIDATE THE CONCRETE, THE SLUMP SHALL NOT EXCEED 4 INCHES, OTHERWISE THE SLUMP SHALL NOT EXCEED 6 INCHES.
10. ALL CONCRETE SHALL BE ADEQUATELY CONSOLIDATED DURING PLACEMENT AND ALL REINFORCING STEEL AND EMBEDDED ITEMS SHALL BE SECURELY TIED IN PLACE TO PREVENT DISPLACEMENT DURING CONCRETE PLACEMENT.
11. EXCEPT WHERE INDICATED OTHERWISE, ALL REINFORCING STEEL SHALL BE BENT AND PLACED IN ACCORDANCE WITH THE "CODE OF STANDARD PRACTICE AND THE SPECIFICATIONS FOR PLACING REINFORCING STEEL" OF THE CONCRETE REINFORCING STEEL INSTITUTE.

ABREVIATIONS

A.B.-	ANCHOR BOLT	GA-	GAUGE
BLKG.-	BLOCKING	GALV.-	GALVANIZED
B.J.-	BALCONY JOISTS	HORIZ.-	HORIZONTAL
BLK.-	BLOCK	L.L.V.-	LONG LEG VERTICAL
BM.-	BEAM	L.L.H.-	LONG LEG HORIZONTAL
B.N.-	BOUNDRY NAIL	MAX-	MAXIMUM
(B)-	BOTTOM	MIN-	MINIMUM
CLR-	CLEAR	M.B.-	MACHINE BOLT
CMU-	CONCRETE MASONRY	(N)-	NEW
COL.-	COLUMN	NTS-	NOT TO SCALE
C.J.-	CEILING JOIST	O.C.-	ON CENTER
CONC.-	CONCRETE	OPP.-	OPPOSITE
CONN.-	CONNECTION	R.J.-	ROOF JOIST
CONT.-	CONTINUOUS	R.B.-	ROOF BEAM
C TO C-	CENTER TO CENTER	REF.-	REFERENCE
CNTRSNK-	COUNTERSINK	P.R.T.-	PREFAB ROOF TRUSSES
DBL-	DOUBLE	REINF.-	REINFORCING STEEL
DIAM-	DIAMETER	SEL. STR.-	SELECT STRUCTURAL
D.F.-	DOUGLAS FIR	SHTG.-	SHEATHING
DRWGS-	DRAWINGS	STAG-	STAGGER
(E)-	EXISTING	SIM.-	SIMILAR
EA.-	EACH	STD.-	STANDARD
ELEV-	ELEVATION	STL-	STEEL
FLG.-	FLANGE	TYP.-	TYPICAL
FL.-	FLOOR	(T)-	TOP
FIN-	FINISH	TOS-	TOP OF SHEATHING
F.J.-	FLOOR JOISTS	T.S.-	TUBE SECTION
FOM-	FACE OF MASONRY	U.N.O.-	UNLESS OTHERWISE NOTED
FOS-	FACE OF STUD	W or WF-	WIDE FLANGE SHAPE
FOC-	FACE OF CONCRETE	W/O-	WITH OUT
HD-	SIMPSON HOLDOWN	VERT.-	VERTICAL
HT.-	HEIGHT		

SPECIAL INSPECTIONS

PROVIDE SPECIAL INSPECTION BY A LICENSED DEPUTY INSPECTOR APPROVED BY THE LOCAL BUILDING OFFICAL FOR THE FOLLOWING WORK IN ACCORDANCE WITH THE REQUIREMENTS OF CHAPTER 17 OF THE CALIFORNIA BUILDING CODE:

1. FOR ALL CONCRETE WITH AN F'c OVER 2,500 psi.
2. FOR ALL REINFORCING STEEL WHICH IS PLACED IN CONCRETE WITH AN F'c OVER 2,500 psi.
3. AS NOTED ELSEWHERE IN THE PLANS OR ON DETAILS.

PRIOR TO FINAL INSPECTION THE 'DESIGN PROFESSIONAL IN RESPONSIBLE CHARGE' SHALL ASSEMBLE ALL FINAL SPECIAL INSPECTION REPROTS FROM EACH OF THE SPECIAL INSPECTION CATAGORIES AND SUBMIT A REPORT NOTING THAT ALL SPECIAL INSPECTION REQUIREMENTS HAVE BEEN COMPLETED WITH NO OUTSTANDING ISSUES.

UNDERGROUND SERVICE ALERT
CALL BEFORE YOU DIG
CALL TOLL FREE 1-800-227-2600
TWO WORKING DAYS BEFORE YOU DIG

DIVISION OF THE STATE ARCHITECT

IDENTIFICATION STAMP
DIV. OF THE STATE ARCHITECT
APP: 03-124589 INC:
REVIEWED FOR
SS ☑ FLS ☑ ACS ☑
DATE: 04/15/2025

VENTURA COUNTY COMMUNITY COLLEGE DISTRICT
MOORPARK OXNARD VENTURA

VENTURA COUNTY COMMUNITY COLLEGE DISTRICT

761 EAST DAILY DRIVE
CAMARILLO, CALIFORNIA 93010
TEL: (805) 652-5500

PROJECT TITLE AND SCHOOL LOCATION

VENTURA COMMUNITY COLLEGE STEM MODULAR BUILDING
VENTURA COMMUNITY COLLEGE
4667 TELEGRAPH RD.
VENTURA, CA 93003

COMMISSIONED ARCHITECT

AMADOR

amador whitte architects, inc.
28328 AGOURA RD, 203 | AGOURA HILLS CA, 91301 | 805-558-4334

CONSULTANT

LUCCI & ASSOCIATES INC.
CONSULTING ELECTRICAL ENGINEERS
3251 CORTE MALPASO, #611
CAMARILLO, CA 93012-8094
(805) 389-6520 FAX (805) 389-6519

LUCCI & ASSOCIATES, INC. reserve their commonlaw copyright and other property rights in these plans. These plans and drawings are not to be reproduced, changed, or copied in any form or manner whatsoever without first obtaining the expressed written permission and consent of LUCCI & ASSOC. INC nor are they to be assigned to any third party without obtaining said written permission and consent.

STAMPS/SEALS

REGISTERED PROFESSIONAL ENGINEER
KENNETH W. LUCCI
No. E 8340
Exp. 09/30/2026
ELECTRICAL
STATE OF CALIFORNIA

LICENSED ARCHITECT
WILLIAM PRICE AMADOR
C-20348
JANUARY 31, 2027
RENEWAL DATE
STATE OF CALIFORNIA

DSA V3 SUBMITTAL 03/21/2025

SHEET TITLE:

LIGHT POLE FOOTING DETAIL

PROJECT NO.: 22-VCCCD-08	PROJECT ARCH: Designer
DRAWN: LK/DS/IT	CHECKED: KL
SHEET NUMBER: **E604**	
DATE: 12/20/24	SHEET: ___ OF ___

Copyright Lucci and Associates Consulting Electrical Engineers. Deviations from this drawing will not be made without their expressed written permission.

L.A.I.# 22-539 PAPER SIZE 42"x30"

DRAFTER: CM01 DRAWING FILENAME: 22-539E604 PATHNAME: G:\22\539\ELS\Sheets DATE: 20 December 2024 TIME: 3:34 pm

American Modular Systems

VENTURA COLLEGE STEM
(1) 72' x 40' BUILDING (HIGH SEISMIC)

SHEET INDEX

SITE SPECIFIC MODIFIED SHEETS

OPTIONS	SHEET NUMBER	SHEET TITLE
SHEET INDEX	☒ TS-2-M	SHEET INDEX
GENERAL NOTES & SPECIFICATIONS	☒ N3.0-M	TYPICAL SCHEDULES DOORS, WINDOWS & FINISHES
FLOOR PLANS	☒ A1.0-M	FLOOR PLAN
	☒ A1.2-M	RESTROOM & JANITOR FLOOR PLANS - AGE RANGE: 13-ADULT
INTERIOR ELEVATIONS	☒ A4.0-M	INTERIOR ELEVATIONS - TYPICAL CLASSROOM
	☒ A4.0-M.A	INTERIOR ELEVATIONS - TYPICAL CLASSROOM
	☒ A4.1-M	RESTROOM INTERIOR ELEVATIONS
EXTERIOR ELEVATIONS	☒ A5.6-M	TYPICAL EXTERIOR ELEVATIONS - SYNTHETIC STUCCO OPTION
FOUNDATION PLAN & DETAILS	☒ S1.1-M	CONCRETE FOUNDATION PLAN (50 PSF LIVE LOAD +15 PSF PARTITION LOAD)
	☒ S1.4-M	CONCRETE FOUNDATION DETAILS
	☒ S1.5-M	CONCRETE FOUNDATION DETAILS
	☒ S4.1-M	ROOF FRAMING PLAN & DETAILS
	☒ S4.1A-M	ROOF FRAMING PLAN & DETAILS
MECHANICAL FLOOR PLAN	☒ M1.0-M	TYPICAL REFLECTED CEILING PLAN
	☒ M1.1A-M	TYPICAL MECHANICAL PLAN OPTIONS
ELECTRICAL PLAN & DETAILS	☒ E1.0-M	TYPICAL ELECTRICAL PLAN
	☒ E1.2-M	ELECTRICAL NOTES & DETAILS
PLUMBING PLAN & DETAILS	☒ P1.0-M	RESTROOM OPTIONS, PLUMBING PLAN, & FIXTURE SCHEDULE

TOTAL SHEETS 81

IDENTIFICATION STAMP
DIV. OF THE STATE ARCHITECT
APP: 03-124589 INC:
REVIEWED FOR
SS ☑ FLS ☑ ACS ☑
DATE: 04/15/2025

American Modular Systems
787 Spreckels Ave., Manteca, CA 95336
Phone (209) 825-1921 Fax (209) 825-7018
www.americanmodular.com

INTELLECTUAL-PROPERTY & PROPRIETARY RIGHTS STATEMENT
COPYRIGHT © AMERICAN MODULAR SYSTEMS (AMS)
AMS OWNS ALL COPYRIGHT AND OTHER INTELLECTUAL-PROPERTY AND PROPRIETARY RIGHTS IN THESE DRAWINGS, SPECIFICATIONS, AND THE MATERIAL CONTAINED HEREIN. CERTAIN ELEMENTS SHOWN IN THESE DOCUMENTS ARE REGISTERED TRADEMARKS OF AMS. ALL PATENTABLE MATERIALS CONTAINED IN THESE DOCUMENTS AND ORIGINATING WITH AMS WILL REMAIN THE SOLE PROPERTY OF AMS. THESE DRAWING, SPECIFICATIONS, AND THE MATERIAL CONTAINED HEREIN MAY NOT BE REPRODUCED, TRANSMITTED, COPIED, DISTRIBUTED, MODIFIED, OR OTHERWISE DISPOSED OF (DIRECTLY OR INDIRECTLY) AND MAY NOT BE USED (IN WHOLE OR IN PART) TO ASSIST IN THE CONSTRUCTION, DESIGN, OR OTHER MAKING OF, OR FOR THE PURPOSE OF FURNISHING ANY INFORMATION FOR THE CONSTRUCTION, DESIGN, OR OTHER MAKING OF, ANY BUILDINGS (MODULAR OR OTHERWISE), DRAWINGS, SPECIFICATIONS, PRINTS, APPARATUS, OR PARTS THEREOF, EXCEPT AS EXPRESSLY PERMITTED BY WRITTEN CONSENT OF, OR IN A WRITTEN AGREEMENT WITH, AMS. SUBMITTAL OR DISTRIBUTION TO MEET OFFICIAL REGULATORY REQUIREMENTS WILL NOT BE CONSTRUED AS PUBLICATION IN DEROGATION OF AMS'S COPYRIGHT OR OTHER INTELLECTUAL-PROPERTY OR PROPRIETARY RIGHTS.

PRE-CHECKED SET NAME
72' x 40' BUILDING
STANDARD MODULAR BUILDING
(HIGH SEISMIC)
FORM

SITE SPECIFIC PROJECT NAME
VENTURA COLLEGE
(1) 72'x40' BUILDING

MANUFACTURER PROFESSIONAL OF RECORD
LICENSED ARCHITECT
PATRICK CAVANAGH
No. C12631
Ren. 3-31-25
STATE OF CALIFORNIA

REVISIONS
1
2
3
4

DRAWN BY:	AA
SCALE:	AS NOTED
DATE:	03/05/25
PROJECT NO:	1895-24

SHEET TITLE:
SHEET INDEX

SHEET NUMBER:
TS-2-M

DOORS							FRAMES			
DOOR NO.	DOOR TYPE	DOOR SIZE	QUANTITY	MATERIAL	FINISH	HARDWARE SET NO.	FRAME TYPE	MATERIAL	FINISH	REMARKS
1	D1	3'-0" x 7'-0"	2	HM	PT	A	F1	STL	PT	HARDWARE LOCKABLE FROM THE INSIDE, SEE DOOR NOTE #3
2	D1	3'-0" x 7'-0"	2	HM	PT	B	F1	STL	PT	HARDWARE LOCKABLE FROM THE INSIDE, SEE DOOR NOTE #3
3	D1	3'-0" x 7'-0"	1	HM	PT	C	F1	STL	PT	
4	D3	3'-0" x 7'-0"	2	HM	PT	D	F1	STL	PT	
6	D4	3'-0" x 7'-0"	1	SC	CLR	E	F2	STL	PT	
7	D2	3'-0" x 7'-0"	1	SC	CLR	C	F2	STL	PT	

DOOR ABBREVIATIONS

HM - HOLLOW METAL
AL - ALUMINUM
S - STEEL
SST - STAINLESS STEEL
STL - STEEL FRAME, 16ga. FULLY WELDED
WWF - WINDOW WALL FRAME
SC - SOLID CORE WOOD
HC - HOLLOW CORE WOOD
PT - PAINTED
CA - CLEAR ANODIZED
BR - BRONZE ANODIZED
CLR - CLEAR FINISH

DOOR NOTES

1. DOORS SHALL COMPLY WITH C.B.C. SECTION 1010.
2. CLASSROOMS ≥ 1000 S.F WILL REQUIRE PANIC HARDWARE THAT COMPLIES WITH C.B.C. SECTION 1010.2.9.
3. PER C.B.C. 1010.2.8.2: PROVIDE LOCKS THAT ALLOW DOORS TO CLASSROOMS AND ANY ROOM WITH AN OCCUPANCY OF FIVE OR MORE PERSONS TO BE LOCKED FROM THE INSIDE. LOCKS SHALL COMPLY WITH C.B.C. SECTION 1010.2.4.

DOOR SCHEDULE

WINDOW TYPE	QTY.	FUNCTION	'W' WIDTH	'H' HEIGHT	FINISH	GLASS TYPE	U FACTOR	SHGC	VT MIN	MIN STC RATING	REMARKS
A	7	FIXED	8'-0"	1'-10"	CLEAR ANODIZED	SOLAR GREY[6]	0.42	0.25	0.44	27	INOPERABLE
B	1	FIXED	5'-0"	1'-10"	CLEAR ANODIZED	SOLAR GREY[6]	0.42	0.25	0.44	27	INOPERABLE
C	2	FIXED	6'-0"	4'-0"	CLEAR ANODIZED	CLEAR	0.42	0.25	0.44	27	INOPERABLE

1. EXTERIOR LITE - 3/16" MINIMUM TEMPERED GLASS, OR LAMINATED AS 1 GLASS OF SOLAR GRAY GLARE REDUCING TYPE WITH A LIGHT TRANSMISSION FACTOR OF 45% MAXIMUM. GLASS SHALL BE DUAL-PANE.
2. WINDOWS THAT MEETS ALL OF THE FOLLOWING CONDITIONS SPECIFIED IN SECTION 2406.4.3, SHALL BE CONSIDERED A HAZARDOUS LOCATION:
   A. THE EXPOSED AREA OF AN INDIVIDUAL PANE IS GREATER THAN 9 SQUARE FEET.
   B. THE BOTTOM EDGE OF THE GLAZING IS LESS THAN 18" ABOVE FINISH FLOOR.
   C. THE TOP EDGE OF THE GLAZING IS GREATER THAN 36" ABOVE FINISH FLOOR.
   D. ONE OR MORE WALKING SURFACE(S) ARE WITHIN 36", MEASURED HORIZONTALLY AND IN A STRAIGHT LINE, OF THE PLANE OF THE GLAZING.
3. WINDOWS THAT ARE CONSIDERED A HAZARDOUS LOCATION SHALL CONTAIN FULLY TEMPERED SAFETY GLAZING & MEET THE FOLLOWING REQUIREMENTS:
   A. PASS THE IMPACT TEST REQUIREMENTS IN ACCORDANCE WITH "CPSC 16 CFR PART 1201" PER SECTION 2406.2, WITH A TEST CRITERIA OF CATEGORY II, UNLESS OTHERWISE INDICATED IN C.B.C. TABLE 2406.2(1).
   B. IDENTIFICATION OF SAFETY GLAZING PER C.B.C. 2406.3
4. ALL WINDOWS SHALL HAVE METAL FRAMES AND BE MANUFACTURED BY OTHERS.
5. NOT USED
6. THE MINIMUM STANDARD GLASS TYPE FOR ALL WINDOWS SHALL SOLAR GREY GLAZING. UPGRADED GLAZING (LOW E, LOW E2, ETC.) MAY BE USED PER SITE SPECIFIC REQUIREMENTS. WINDOWS TO BE DUAL-PANE PER CA ENERGY CODE.
7. ALL NFRC RATED FENESTRATION AS NOTED ON THE WINDOW SCHEDULE REQUIRE TEMPORARY NFRC LABELS. TEMPORARY NFRC LABELS SHALL STAY ON FENESTRATION PRODUCTS UNTIL INSPECTOR HAS VERIFIED THAT THE INSTALLED U-FACTOR, SHGC, AND VT MATCH THE WINDOW SCHEDULE.

WINDOW SCHEDULE

FINISHES										
				WALLS						
ROOM NUMBER	ROOM NAME	FLOOR	BASE	FRONT	REAR	RIGHT	LEFT	CEILING	CEILING HEIGHT	REMARKS
101	STEM HARBOR	S	D	F	F	F	F	K	9'-0"	
102	BIOLOGY LAB	S	D	F	F	F	F	K	9'-0"	
103	CADAVER ROOM	R	R	F	F	F	F	K	9'-0"	
104	ELECTRICAL/IT	O	N/A	Q	Q	Q	Q	K	9'-0"	
105	JANITOR CLOSET	O	E	J/N	J/N	J/N	J/N	H	9'-0"	CERAMIC TILE AROUND AND 4' ABOVE MOP SINK
106	STAFF R.R.	N	N	N	N	N	N	M	9'-0"	
107	STAFF R.R.	N	N	N	N	N	N	M	9'-0"	

FINISH INDICATOR OPTIONS

~~A - CARPET; PER STATE OF CALIF SPEC COMPLYING WITH GROUP 1, TYPE A OR TYPE B, CLASS 2, DENSITY 4600.~~
~~B - VINYL SHEET FLOORING; 0.6 MIN, C.D.F. PER ASTM D 2047~~
~~C - VCT; ARMSTRONG, STANDARD, OR EXCELON.~~
D - TOP SET BASE; 4"
E - TOP SET BASE; 6"
F - WALL FINISH; 1/2" VINYL TACKBOARD CLASS 1 OVER 1/2" GYP BOARD BACKING
~~G - 1/2" W.R. GYP BOARD; TAPE, PAINTED FINISH~~
H - 1/2" GYP BOARD; TAPE, PAINTED FINISH
J - 3/32" F.R.P.; OVER 1/2" W.R. GYP BOARD
K - ACOUSTICAL LAY-IN GRID CEILING PANELS; 2'x2' OR 2'x4'
~~L - 1/2" VINYL TACKBOARD; CLASS 1, OVER 5/8" TYPE "X" GYP BOARD BACKING~~
M - 5/8" TYPE 'X' GYP BOARD; TAPE, TEXTURE, PAINTED FINISH
N - CERAMIC TILE
O - EXPOSED CONCRETE WITH CONCRETE SEALER
~~P - CLOUD CEILING PANELS~~
Q - 3/4" FIRE RATED PLYWOOD (UNPAINTED)
R - EPOXY FLOORING w/4" SELF COVE
S - MCT FLOORING

NOTE: ALL INTERIOR FINISHES SHALL COMPLY WITH CFC, CBC & TITLE 19.

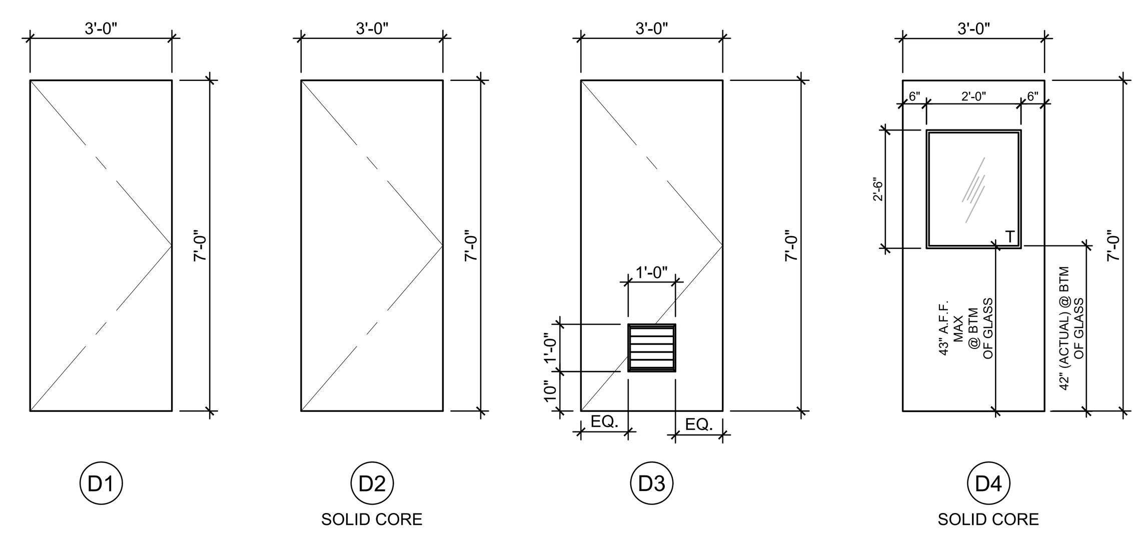

DOOR TYPES

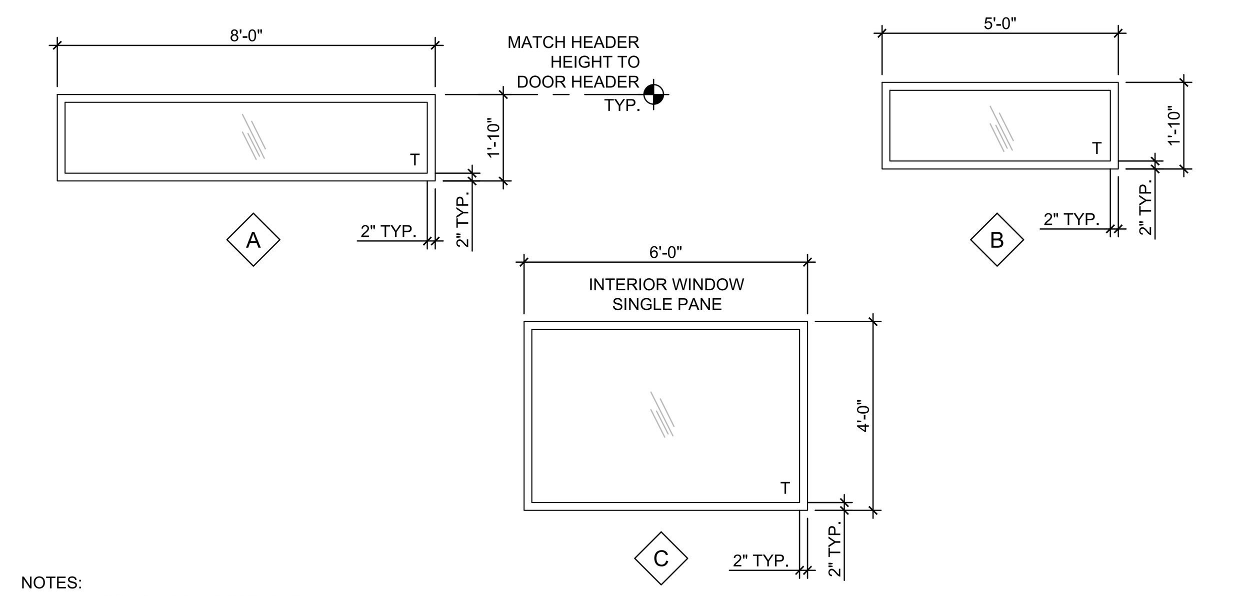

NOTES:
1. WINDOWS ARE INOPERABLE.
2. IDENTIFICATION OF GLASS & SAFETY GLAZING PER CBC CHAPTER 24

T = TEMPERED

WINDOW TYPES

ROOM FINISHES SCHEDULE

T = TEMPERED

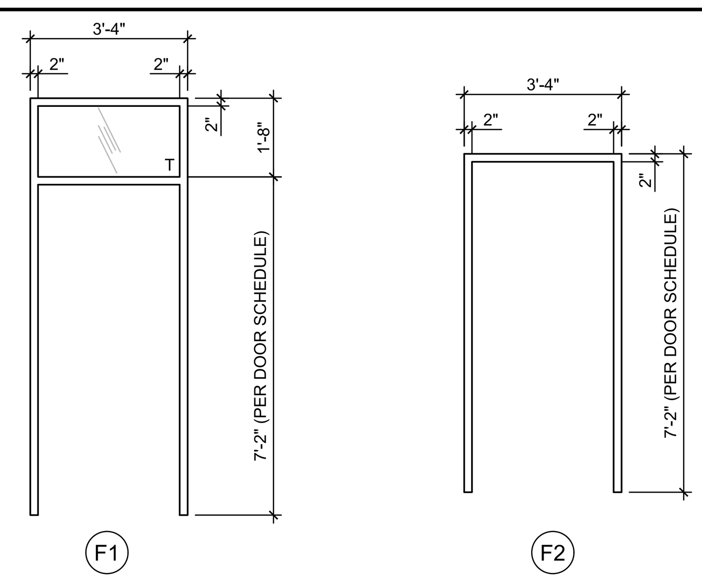

DOOR FRAME TYPES

WINDOW GLAZING AREA TABLE	
BUILDING SIZE (FT)	MAX ALLOWED WINDOW AREA (SQ FT)*
~~24'x40'~~	~~160~~
~~36'x40'~~	~~240~~
~~48'x40'~~	~~320~~
~~60'x40'~~	~~400~~
72'x40'	480
~~84'x40'~~	~~560~~
~~96'x40'~~	~~640~~
~~108'x40'~~	~~720~~
~~120'x40'~~	~~800~~

* WINDOW PLACEMENT & SIZE MAY VARY AS TITLE 24 MODEL REFLECTS THE LARGEST WINDOW OPTION.
THE TOTAL WINDOW AREA OF ANY BUILDING MAY NOT EXCEED THE MAXIMUM ALLOWED WINDOW AREA (SQ. FT.) LISTED IN THE TABLE ABOVE.
IF A BUILDING EXCEEDS THE MAXIMUM AREA, A PROJECT SPECIFIC TITLE 24 REPORT SHALL BE PROVIDED

WINDOW GLAZING AREA TABLE

A	EXTERIOR DOOR LOCKSET w/LEVER RHODES SCHLAGE ND95PD - CLASSROOM LOCK
B	EXTERIOR DOOR PANIC BAR w/PULL ON EXTERIOR VON DUPRIN AX99NL (REQUIRED WHEN OCCUPANT LOAD IS 50 0R MORE)
C	DOOR LOCKSET w/LEVER RHODES SCHLAGE ND80PD
D	DOOR LOCKSET w/LEVER RHODES SCHLAGE ND50PD
E	DOOR LOCKSET w/LEVER RHODES SCHLAGE ND70PD
F	~~INTERIOR STOREROOM COPPER CREEK 6250-STOREROOM w/ LEVER~~
G	~~INTERIOR CLASSROOM COPPER CREEK 6260-CLASSROOM w/ LEVER~~
H	~~EXTERIOR DOOR LOCKSET w/LEVER RHODES SCHLAGE ND70PD - MULTI-ACCOMODATION RESTROOM LOCK~~
I	~~EXTERIOR DOOR LOCKSET w/LEVER & PUSH BUTTON RHODES SCHLAGE ND85PD - SINGLE USER RESTROOM LOCK~~
J	~~EXTERIOR DOOR LOCKSET w/LEVER RHODES SCHLAGE ND80PD - STOREROOM LOCK~~

EXTERIOR DOOR HARDWARE

1. HINGES: HAGER 4-1/2x4-1/2 BUTTS, BB1279 US26D, 1-1/2 PAIR PER DOOR, WITH SET SCREW IN BARREL AND BALL BEARING DESIGN.
2. CLOSER: NORTON 8500DA OR 8500BF SERIES, LCN 1460 DEL SERIES OR EQUAL. (5 LBS. MAX. PRESSURE) ALL SCHLAGE HARDWARE IS PROVIDED WITH A CLOSER
3. WEATHERSTRIPPING: ALL EXTERIOR DOORS SHALL BE WEATHERSTRIPPED WITH PEMKO 299D, ULTRA WS007 OR EQUAL, AT DOOR JAMBS AND HEAD.
4. THRESHOLD: THRESHOLD SHALL BE PEMKO 271 AV 5" ALUMINUM WITH PEMKO 216 AV ULTRA TH042 DOOR BOTTOM.
5. LOCKDOWN: INTERIOR TEACHERS' MANUAL LOCK FOR CAMPUS LOCK DOWN CRITERIA - REQUIRED FOR STATE-FUNDED SCHOOLS, PER EDUCATION CODE SECTION 17075.50 (AND ALSO CBC 1010.2.8.2): PROVIDE LOCKS THAT ALLOW DOORS TO CLASSROOMS AND ANY ROOM WITH AN OCCUPANCY OF FIVE OR MORE PERSONS TO BE LOCKED FROM THE INSIDE. LOCKS SHALL COMPLY WITH C.B.C. SECTION 1010.2.4.

DOOR HARDWARE NOTES

1. 11B-404.2.3 CLEAR WIDTH
   DOOR OPENINGS SHALL PROVIDE A CLEAR WIDTH OF 32 INCHES (813 MM) MINIMUM. CLEAR OPENINGS OF DOORWAYS WITH SWINGING DOORS SHALL BE MEASURED BETWEEN THE FACE OF THE DOOR AND THE STOP, WITH THE DOOR OPEN 90 DEGREES. OPENINGS MORE THAN 24 INCHES (610 MM) DEEP SHALL PROVIDE A CLEAR OPENING OF 36 INCHES (914 MM) MINIMUM. THERE SHALL BE NO PROJECTIONS INTO THE REQUIRED CLEAR OPENING WIDTH LOWER THAN 34 INCHES (864 MM) ABOVE THE FINISH FLOOR OR GROUND. PROJECTIONS INTO THE CLEAR OPENING WIDTH BETWEEN 34 INCHES (864 MM) AND 80 INCHES (2032 MM) ABOVE THE FINISH FLOOR OR GROUND SHALL NOT EXCEED 4 INCHES (102 MM).

   EXCEPTIONS:
   1. IN ALTERATIONS, A PROJECTION OF 5/8 INCH (15.9 MM) MAXIMUM INTO THE REQUIRED CLEAR WIDTH SHALL BE PERMITTED FOR THE LATCH SIDE STOP.
   2. DOOR CLOSERS AND DOOR STOPS SHALL BE PERMITTED TO BE 78 INCHES (1981 MM) MINIMUM ABOVE THE FINISH FLOOR OR GROUND.
2. HANDLES, PULLS, LATCHES, LOCKS AND OTHERS OPERABLE PARTS ON DOORS SHALL BE OPERABLE WITH ONE HAND AND SHALL NOT REQUIRE TIGHT GRASPING, PINCHING OR TWISTING OF THE WRIST. THE FORCE REQUIRED TO ACTIVATE OPERABLE PARTS SHALL BE 5 lbs. MAX. (11B-404.2.7, 11B-309.4)
3. DOORS SHALL BE OPERABLE FROM INSIDE WITH A SINGLE MOTION W/O THE USE OF ANY TOOLS, EFFORT, OR SPECIAL KNOWLEDGE.
4. EMERGENCY EXIT AND PANIC HARDWARE
   EMERGENCY EXIT AND PANIC HARDWARE SHALL COMPLY WITH SFM STANDARD 12-10-3, SECTION 12-10-302
   A) THE CROSS-BAR SHALL EXTEND ACROSS NOT LESS THAN ONE-HALF THE WIDTH OF THE DOOR/GATE
   D) THE ENDS OF THE CROSS-BAR SHALL BE CURVED, GUARDED OR OTHERWISE DESIGNED TO PREVENT CATCHING ON THE CLOTHING OF PERSONS DURING EGRESS.

*ADDITIONAL DOORS MAY BE REQUIRED BASED ON BUILDING LAYOUT.

DOOR HARDWARE SCHEDULE

EMERGENCY EXIT AND PANIC HARDWARE:
IN COMPLIANCE WITH SFM STANDARD 12-10-3, SECTION 12-1-302

(A) THE CROSS BAR SHALL EXTEND ACROSS NOT LESS THAN ONE HALF THE WIDTH OF THE DOOR/GATE.

(B) THE ENDS OF THE CROSS BAR SHALL BE CURVED, GUARDED OR OTHERWISE DESIGNED TO PREVENT CATCHING ON THE CLOTHING OF PERSONS DURING EGRESS.

EMERGENCY EXIT AND PANIC HARDWARE

IDENTIFICATION STAMP
DIV. OF THE STATE ARCHITECT
APP: 03-124589 INC:
REVIEWED FOR
SS ☑ FLS ☑ ACS ☑
DATE: 04/15/2025

American Modular Systems
787 Spreckels Ave., Manteca, CA 95336
Phone (209) 825-1921 Fax (209) 825-7018
www.americanmodular.com

INTELLECTUAL-PROPERTY & PROPRIETARY RIGHTS STATEMENT
COPYRIGHT © AMERICAN MODULAR SYSTEMS (AMS)
AMS OWNS ALL COPYRIGHT AND OTHER INTELLECTUAL-PROPERTY AND PROPRIETARY RIGHTS IN THESE DRAWINGS, SPECIFICATIONS, AND THE MATERIAL CONTAINED HEREIN. CERTAIN ELEMENTS SHOWN IN THESE DOCUMENTS ARE REGISTERED TRADEMARKS OF AMS. ALL PATENTABLE MATERIALS CONTAINED IN THESE DOCUMENTS AND ORIGINATING WITH AMS WILL REMAIN THE SOLE PROPERTY OF AMS. THESE DRAWING, SPECIFICATIONS, AND THE MATERIAL CONTAINED HEREIN MAY NOT BE REPRODUCED, TRANSMITTED, COPIED, DISTRIBUTED, MODIFIED, OR OTHERWISE DISPOSED OF (DIRECTLY OR INDIRECTLY) AND MAY NOT BE USED (IN WHOLE OR IN PART) TO ASSIST IN THE CONSTRUCTION, DESIGN, OR OTHER MAKING OF, OR FOR THE PURPOSE OF FURNISHING ANY INFORMATION FOR THE CONSTRUCTION, DESIGN, OR OTHER MAKING OF, ANY BUILDINGS (MODULAR OR OTHERWISE), DRAWINGS, SPECIFICATIONS, PRINTS, APPARATUS, OR PARTS THEREOF, EXCEPT AS EXPRESSLY PERMITTED BY WRITTEN CONSENT OF, OR IN A WRITTEN AGREEMENT WITH, AMS. SUBMITTAL OR DISTRIBUTION TO MEET OFFICIAL REGULATORY REQUIREMENTS WILL NOT BE CONSTRUED AS PUBLICATION IN DEROGATION OF AMS'S COPYRIGHT OR OTHER INTELLECTUAL-PROPERTY OR PROPRIETARY RIGHTS.

PRE-CHECKED SET NAME
72' x 40' BUILDING
STANDARD MODULAR BUILDING
(HIGH SEISMIC)
FORM

SITE SPECIFIC PROJECT NAME
VENTURA COLLEGE
(1) 72'x40' BUILDING

MANUFACTURER PROFESSIONAL OF RECORD

REVISIONS
1
2
3
4

DRAWN BY:	AA
SCALE:	AS NOTED
DATE:	12/30/24
PROJECT NO:	1895-24

SHEET TITLE:
TYPICAL SCHEDULES: DOORS, WINDOWS & FINISHES

SHEET NUMBER:
N3.0-M

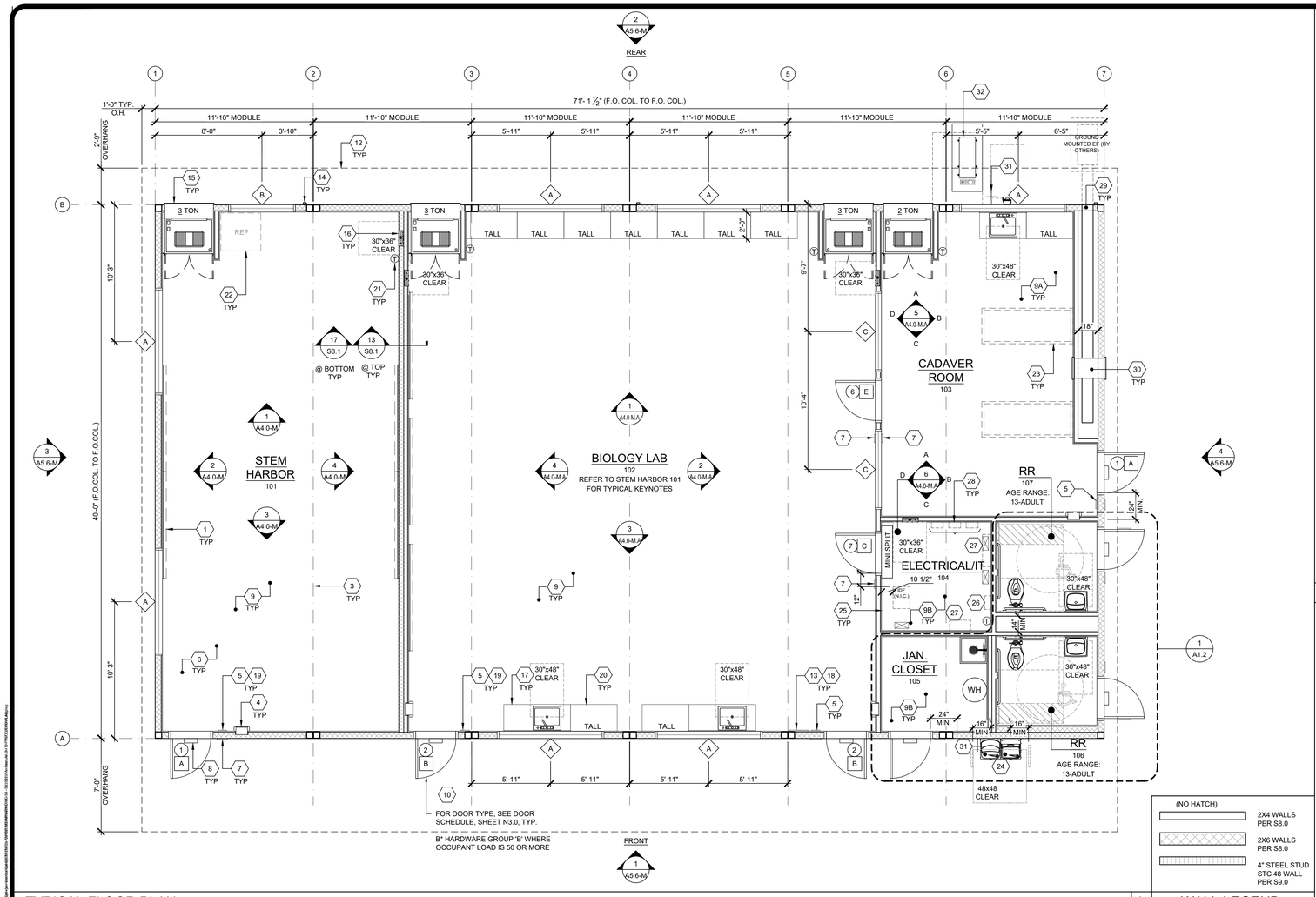

TYPICAL FLOOR PLAN

SCALE: 1/4" = 1'-0" | A

1	(7) 8'x4' MARKER BOARDS - SEE SHEET A4.0
2	NOT USED
3	TYP MOD LINE
4	SEMI RECESSED FIRE EXTINGUISHER - TOP OF HANDLE @ +48" A.F.F. 4" MAX PROTRUSION FROM WALL IF BOTTOM OF FIRE EXTINGUISHER IS ABOVE 27" A.F.F. - SEE 19/N4.0
5	TACTILE EXIT SIGN PER DETAIL 10/N4.0 (BY OTHERS)
6	EGRESS AREA
7	ROOM SIGNAGE AND I.S.A. PER DETAILS 5&9/N4.0 (BY OTHERS)
8	EXTERIOR LIGHT
9	MCT FLOORING
10	EGRESS DOOR
11	NOT USED
12	OVERHANG
13	OCCUPANT LOAD SIGN PER DETAIL 11/N4.0 (BY OTHERS)
14	DOWNSPOUT - DISCHARGE TO SPLASH BLOCK (U.O.N.)
15	HVAC - SEE MECHANICAL AND NOTES ON EXTERIOR ELEVATIONS.
16	ELECTRICAL PANEL (LOCATION MAY VARY)
17	CASEWORK WITH SINK - BLOCKING AS NEEDED PER 8/A7.1 REFER TO 17/-
18	FLOOR LIVE LOAD SIGN PER 2022 CBC SECTION 106.1. *(FLOOR LIVE LOAD SIGN IS REQUIRED ONLY FOR COMMERCIAL OR INSTITUTIONAL BUILDINGS DESIGNED WITH LIVE LOADS EXCEEDING 50 PSF) WHERE 150 PSF LIVE LOAD IS SPECIFIED, THE TEXT "LONG TERM STORAGE NOT PERMITTED" SHALL ALSO BE INCLUDED ON THE SIGN.*
19	ASSISTIVE LISTENING (AL) SIGN POSTED IN PROMINENT PLACE AT OR NEAR THE ENTRANCE PER 17/N4.0.
20	CASEWORK - BLOCKING AS NEEDED PER 8/A7.1
21	THERMOSTAT 48" MAX A.F.F.
22	REFRIGERATOR (BY OTHERS)
23	CADAVER TABLE (BY OTHERS)
24	HI-LOW DRINKING FOUNTAIN w/BOTTLE FILLER - PER 11/P2.0 (GUARD RAILS BY OTHERS; NOT ATTACHED TO AMS BUILDING)
25	IDF CABINET - (BY OTHERS NIC) ATTACHMENT BY OTHERS PER E401 ARCH PLANS
26	ARP LIGHTING CONTROL PANEL (BY OTHERS NIC) - SEE E401 ARCH PLANS
27	EM INVERTER (BY OTHERS NIC) - SEE E401 ARCH PLANS
28	FACP & CABINET (BY OTHERS NIC) - SEE E401 ARCH PLANS
29	12x12 OPENING FOR EXH DUCT @ 24" A.F.F. - SEE MECHANICAL
9A	EPOXY FLOORING w/4" SELF COVE
9B	EXPOSED CONCRETE w/ CONCRETE SEALER
30	24x12 MAKE UP AIR LOUVER MIN. @ 96" A.F.F. - SEE MECHANICAL
31	HOSE BIB
32	CONDENSER

KEY NOTES

1. REFER TO SHEETS N5.0 FOR POSSIBLE ADDITIONAL FLOOR PLAN CONFIGURATIONS.
2. OPTIONAL INTERIOR WALLS MAY OCCUR THROUGHOUT THE BUILDING AS CONSTRUCTED PER SHEETS S8.1 OR S9.1. THE PC TITLE 24 HAS BEEN RUN FOR THE WORST CASE ENVELOPE BASED ON AREA.
3. PANIC HARDWARE COMPLYING WITH C.B.C. 1010.2.9 IS REQUIRED TO BE INSTALLED WHEN THE CONFIGURATION OF ANY ROOM PROVIDES AN OCCUPANT LOAD OF 50 OR GREATER.
4. IF OCCUPANCY LOAD EXCEEDS 50, PROVIDE A SECOND EXIT DOOR, PER CBC TABLE 1006.2.1.
5. FOR EVERY ROOM OR SPACE USED FOR ASSEMBLY OR CLASSROOM, PROVIDE AN OCCUPANT LOAD SIGN (BY OTHERS) IN A CONSPICUOUS PLACE, NEAR THE MAIN EXIT, PER C.B.C. SECTION 1004.9.
6. ALL PRIMARY EXTERIOR DOOR ENTRIES SHALL BE COVERED TO PREVENT WATER INTRUSION BY USING NONABSORBENT FLOOR AND WALL FINISHES WITHIN AT LEAST 2 FEET AROUND AND PERPENDICULAR TO OPENING, PER CALGREEN, SECTION 5.407.2.2.1.
7. PRIMARY EXTERIOR DOOR ENTRIES SHALL HAVE AT LEAST ONE OF THE FOLLOWING:
   - INSTALLED AWNING AT LEAST 4 FEET IN DEPTH (BY OTHERS).
   - OPTIONAL SIDE WALL CANOPY (4 FEET IN DEPTH) PER SHEET S5.4A.
   - ROOF OVERHANG AT LEAST 4 FEET IN DEPTH.
   - DOOR RECESSED AT LEAST 4 FEET.
   - OTHER METHODS WHICH PROVIDE EQUIVALENT PROTECTION (BY OTHERS)
8. ~~NOT USED~~
9. CABINETRY MAY BE INSTALLED ON ONE OR BOTH SIDES OF INTERIOR WALLS AND THE INSIDE FACE OF EXTERIOR WALLS WHEN INSTALLED PER THE DETAIL 8/A7.1.

SITE NOTE

3/16:12 (1%) MINIMUM TO 1/4:12 (2%) MAXIMUM GRADE FROM FACE OF BUILDING MUST BE ADHERED TO FOR WATER RUN-OFF. PONDING MAY OCCUR AROUND THE PERIMETER OF THE BUILDING.

SHEET NOTES

(NO HATCH)	
	2X4 WALLS PER S8.0
	2X6 WALLS PER S8.0
	4" STEEL STUD STC 48 WALL PER S9.0

WALL LEGEND

BUILDING SIZE SCHEDULE				
BUILDING SIZE (FT)	TOTAL # OF 12'-0" WIDE MODULES	TOTAL # OF CENTER MODULES	OVERALL BUILDING WIDTH[1]	
24'x40'	2	0	23'-8½"	
36'x40'	3	1	35'-6¾"	
48'x40'	4	2	47'-5"	
60'x40'	5	3	59'-3¼"	
72'x40'	6	4	71'-1½"	☒
84'x40'	7	5	82'-11¾"	
96'x40'	8	6	94'-10"	
108'x40'	9	7	106'-8¼"	
120'x40'	10	8	118'-6½"	

NOTES:

1. TOTAL BUILDING WIDTH INCLUDES 1/4" PER MODULAR CONSTRUCTION TOLERANCE PER FOUNDATION SHEET S1.1

BUILDING SIZE SCHEDULE

- (X) = KEY NOTE - SEE KEY NOTES ABOVE
- (X) = DOOR TYPE - SEE SCHEDULE, SHEET N3.0
- X = DOOR HARDWARE - SEE HARDWARE SCHEDULE, SHEET N3.0
- (X) = WINDOW TYPE - SEE SCHEDULE, SHEET N3.0

SYMBOLS LEGEND

16

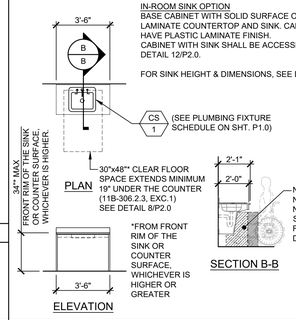

IN-ROOM SINK OPTION
BASE CABINET WITH SOLID SURFACE OR PLASTIC LAMINATE COUNTERTOP AND SINK. CABINET SHALL HAVE PLASTIC LAMINATE FINISH.
CABINET WITH SINK SHALL BE ACCESSIBLE - SEE DETAIL 12/P2.0.

FOR SINK HEIGHT & DIMENSIONS, SEE DETAIL 8/P2.0.

CLASSROOM SINK

SCALE: 1/4" = 1'-0" | 17

ENERGY CONTROLS

1. DEMAND RESPONSE CONTROLS:
   ONLY REQUIRED IN BUILDINGS LARGER THAN 10,000 S.F., THEREFORE, NOT REQUIRED FOR THIS PC.
2. AUTOMATIC DAYLIGHTING CONTROLS:
   NOT REQUIRED IN ROOMS WHERE COMBINED INSTALLED LIGHTING POWER IN COMBINED SKYLIT & PRIMARY DAYLIT ZONES ARE <120 WATTS. INSTALLED WATTAGE IN PRIMARY SIDELIT DAY LIT ZONE IS 90 WATTS (2x 45w, AS SHOWN ON SHEET E1.0). THEREFORE, AUTOMATIC DAYLIGHTING CONTROLS ARE ONLY REQUIRED WHEN "SOLATUBES" ARE INSTALLED. SEE A1.1
3. ENERGY MANAGEMENT CONTROL SYSTEM (EMCS) CONNECTION:
   PER TITLE 24 CODE, "AN EMCS MAY BE INSTALLED TO COMPLY WITH THE REQUIREMENTS OF ONE OR MORE LIGHTING CONTROLS IF IT MEETS THE MINIMUM REQUIREMENTS". PC MAY CONTAIN OCCUPANCY SENSORS AND PHOTOCELL CONTROL LIGHTING. IN THAT CASE, AN EMCS IS NOT REQUIRED FOR THIS PC.
4. SOLAR-READY ZONE REQUIREMENTS:
   REQUIREMENTS & TABLE CAN BE FOUND ON SHEET A2.0

NOTE:
ANY MONITORING EQUIPMENT OR ASSOCIATED SENSORS ARE SITE SPECIFIC AND ARE NOT INCLUDED IN THE BASE PC.

ENERGY NOTES

ACOUSTIC CONTROLS

1. WHEN THE PRE-CHECK (PC) BUILDING IS SITE ADAPTED, THE BUILDING AND SITE FEATURES SHALL COMPLY WITH THE CALGREEN CODE, SECTION 5.507.4, FOR THE SPECIFIC SITE LOCATION.
2. MINIMUM WALL ASSEMBLIES:
   WALL ASSEMBLIES SHALL BE CONSTRUCTED PER DETAIL SHEETS A5.3, A5.5, A5.7, & A8.0, WITH EITHER 2x4 WOOD STUDS OR 6" STEEL STUDS PER LISTED OPTIONS.
   MINIMUM STC RATINGS LISTED BELOW ARE PER THE CATALOG OF STC & IIC RATINGS FOR WALL AND FLOOR/CEILING ASSEMBLIES, PRODUCED BY THE OFFICE OF NOISE CONTROL, CA DEPARTMENT OF HEALTH SERVICES.

(1) LAYER 1/2" GYPSUM BOARD SECURED TO MIN. 2x4 STUDS @ 16" O.C. MAX.

STC=28
(CATALOG SECTION 1.2.1.5.4.1)
TEST REF.: NATIONAL RESEARCH COUNCIL OF CANADA - NRC #66

(1) LAYER 1/2" GYPSUM BOARD SECURED TO MIN. 2½" METAL STUDS @ 24" O.C. MAX.

STC=27
(CATALOG SECTION 1.3.2.5.4.1)
TEST REF.: NATIONAL RESEARCH COUNCIL OF CANADA - NRC #66

3. IN THE EVENT THAT A PC CLASSROOM IS DESIGNED TO CONNECT TO ANOTHER PC CLASSROOM OR RESTROOM, INTERIOR SOUND TRANSMISSION IN THE INTERIOR ADJOINING WALL AND FLOOR/CEILING SHALL MEET THE MINIMUM REQUIREMENT OF A STC OF 40, PER CALGREEN CODE SECTION 507.4.3. (EXAMPLES OF QUALIFYING ASSEMBLIES SHOWN BELOW).

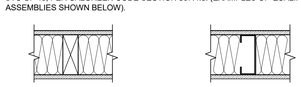

(2) LAYER 5/8" GYPSUM BOARD SECURED TO MIN. 2x4 STUDS @ 24" O.C. MAX. w/ 3½" THK. BATT INSTALLATION

STC=40
TEST REF.: AUDIO ALLOY L.L.C TEST NUMBER: OL-05-1003

(2) LAYER 5/8" GYPSUM BOARD SECURED TO MIN. 2½" METAL STUDS @ 24" O.C. MAX. W/3½ THK BATT INSTALLATION

STC=48
TEST REF.: AUDIO ALLOY L.L.C TEST NUMBER OL-92-410

4. MINIMUM WINDOW & DOOR RATINGS:
   ALL WINDOWS AND DOORS SPECIFIED ON THE SCHEDULES FOUND ON SHEET N3.0 OF THIS PACKAGE SHALL MEET A MINIMUM STC RATING OF 27.

ACOUSTIC NOTES

IDENTIFICATION STAMP
DIV. OF THE STATE ARCHITECT
APP: 03-124589 INC:
REVIEWED FOR
SS ☑ FLS ☑ ACS ☑
DATE: 04/15/2025

AMS®
American Modular Systems
787 Spreckels Ave., Manteca, CA 95336
Phone (209) 825-1921 Fax (209) 825-7018
www.americanmodular.com

INTELLECTUAL-PROPERTY & PROPRIETARY RIGHTS STATEMENT
COPYRIGHT © AMERICAN MODULAR SYSTEMS (AMS)
AMS OWNS ALL COPYRIGHT AND OTHER INTELLECTUAL-PROPERTY AND PROPRIETARY RIGHTS IN THESE DRAWINGS, SPECIFICATIONS, AND THE MATERIAL CONTAINED HEREIN. CERTAIN ELEMENTS SHOWN IN THESE DOCUMENTS ARE REGISTERED TRADEMARKS OF AMS. ALL PATENTABLE MATERIALS CONTAINED IN THESE DOCUMENTS AND ORIGINATING WITH AMS WILL REMAIN THE SOLE PROPERTY OF AMS. THESE DRAWINGS, SPECIFICATIONS, AND THE MATERIAL CONTAINED HEREIN MAY NOT BE REPRODUCED, TRANSMITTED, COPIED, DISTRIBUTED, MODIFIED, OR OTHERWISE DISPOSED OF (DIRECTLY OR INDIRECTLY) AND MAY NOT BE USED (IN WHOLE OR IN PART) TO ASSIST IN THE CONSTRUCTION, DESIGN, OR OTHER MAKING OF, OR FOR THE PURPOSE OF FURNISHING ANY INFORMATION FOR THE CONSTRUCTION, DESIGN, OR OTHER MAKING OF, ANY BUILDINGS (MODULAR OR OTHERWISE), DRAWINGS, SPECIFICATIONS, PRINTS, APPARATUS, OR PARTS THEREOF, EXCEPT AS EXPRESSLY PERMITTED BY WRITTEN CONSENT OF, OR IN A WRITTEN AGREEMENT WITH, AMS. SUBMITTAL OR DISTRIBUTION TO MEET OFFICIAL REGULATORY REQUIREMENTS WILL NOT BE CONSTRUED AS PUBLICATION IN DEROGATION OF AMS'S COPYRIGHT OR OTHER INTELLECTUAL-PROPERTY OR PROPRIETARY RIGHTS.

PRE-CHECKED SET NAME
72' x 40' BUILDING
STANDARD MODULAR BUILDING
(HIGH SEISMIC)
FORM®

SITE SPECIFIC PROJECT NAME
VENTURA COLLEGE
(1) 72'x40' BUILDING

MANUFACTURER PROFESSIONAL OF RECORD
LICENSED ARCHITECT PATRICK CARNEY No. C12631 Ren. 3-31-25 STATE OF CALIFORNIA

REVISIONS
1
2
3
4

DRAWN BY:	AA
SCALE:	AS NOTED
DATE:	03/05/25
PROJECT NO:	1895-24

SHEET TITLE:
TYPICAL FLOOR PLAN

SHEET NUMBER:
A1.0-M

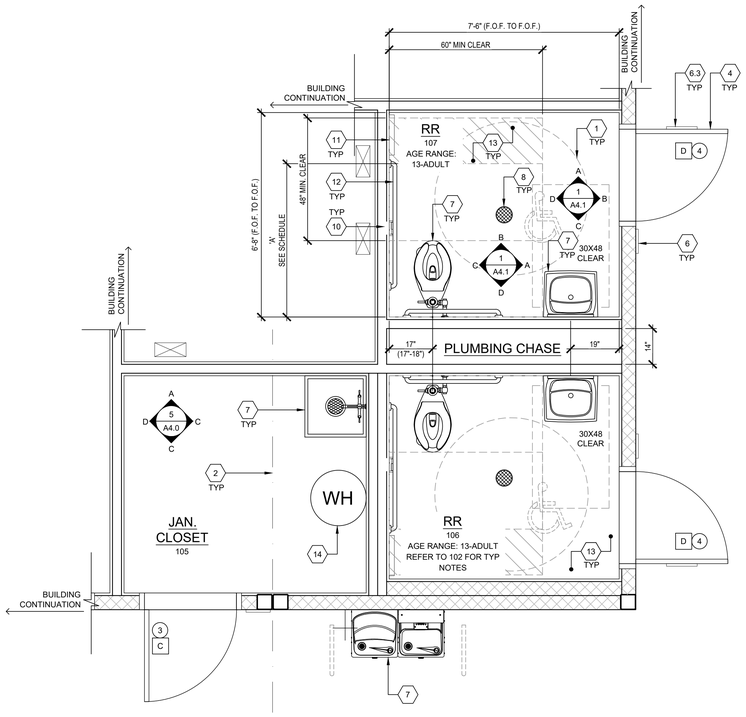

RESTROOM & JANITOR FLOOR PLAN
AGE RANGE: 13-ADULT
SCALE: 1/2" = 1'-0" | A

1 CLEAR FLOOR SPACE AREA
2 TYP. MOD LINE
3 NOT USED
4 DOOR PER SCHEDULE ON SHEET N3.0, TYP.
5 NOT USED
5.1 NOT USED
6 ROOM AND ISA SIGNAGE (BY OTHERS) PER DETAILS 3, 4 & 9/N4.0
6.1 NOT USED
6.2 NOT USED
6.3 DOOR SIGNAGE (BY OTHERS) PER 8 & 4 SHEET N4.0
7 PLUMBING FIXTURE PER P1.0
8 FLOOR DRAIN (LOCATION MAY VARY) - PER P1.0. 1:48 FLOOR SLOPE MAX
9 NOT USED
10 TOILET TISSUE DISPENSER PER ACCESSIBLE HEIGHTS TABLE 10/P2.0
11 TOILET SEAT COVER DISPENSER PER P1.0 (BRADLEY MODEL 508-32, OR EQUAL) (BY OTHERS)
12 GRAB BARS - SEE 6/A7.1
13 CERAMIC TILE FLOOR FINISH w/6" CERAMIC TILE COVE BASE
14 WATER HEATER PER 2/M1.4A

KEY NOTES

1. DIMENSIONS ARE TO FACE OF FINISH (F.O.F.) UNLESS NOTED OTHERWISE (i.e. F.O.C., ℄)
2. RESTROOM CONFIGURATION MAY VARY PER BUILDING CONFIGURATION.
3. RESTROOM MODULE OCCURS ONLY AT END OF BUILDING. SINGLE RESTROOMS MAY OCCUR IN ANY PART OF A BUILDING.
4. RESTROOM MODULE CANNOT STAND ALONE AND SHALL BE ASSEMBLED TOGETHER WITH AT LEAST ONE OTHER MODULE OF THE SAME SIZE.
5. INTERIOR WALLS MAY OCCUR THROUGHOUT BUILDING. REFER TO SHEET S8.1 FOR ATTACHMENTS.
6. REFER TO SCHEDULE 10/P2.0 FOR ACCESSIBLE HEIGHTS & DIMENSIONS.
7. REFER TO DETAILS 3, 4 & 5, SHEET A7.1 FOR TOILET PARTITION ANCHORAGE BLOCKING.
8. SEWER AND WATER STUB OUTS SHALL BE LOCATED WITHIN THE ALLOWABLE AREA AS SHOWN ON FLOOR PLAN AND CONNECTIONS SHALL BE EASILY ACCESSIBLE FOR FUTURE RELOCATION. STUB OUT HEIGHT SHALL BE COORDINATED BY THE MANUFACTURER.
9. PIPING MATERIAL
   a. WATER: COPPER TYPE "L", 95/5 SOLDER.
   b. WASTE DRAIN AND VENT: ABS.
10. TOILET COMPARTMENT DOORS LOCATED IN THE SIDE WALL OR PARTITION, THE DOOR OPENING SHALL BE 4 INCHES (102MM) MAXIMUM FROM THE FRONT PARTITION, PER C.B.C. SECTION 11B-604.8.1.2.
11. ALL RESTROOM AND SINK ACCESSORIES NOT SHOWN HERE MUST BE COORDINATED BY THE PROJECT AOR/DISTRICT BEFORE SUBMITTING SITE-SPECIFIC PLANS TO DSA FOR REVIEW.

PLUMBING NOTE

MODULAR MFR. TO STUB THROUGH FLOOR ALL PLUMBING LINES. BUILDING PERIMETER POC'S SHOWN ARE FOR COORDINATION PURPOSES ONLY. ALL UNDER-FLOOR CONNECTIONS ARE BY SITE CONTRACTOR, U.O.N.

SITE NOTE

3/16:12 (1%) MINIMUM TO 1/4:12 (2%) MAXIMUM GRADE FROM FACE OF BUILDING MUST BE ADHERED TO FOR WATER RUN-OFF. PONDING MAY OCCUR AROUND THE PERIMETER OF THE BUILDING.

GENERAL NOTES

IDENTIFICATION STAMP
DIV. OF THE STATE ARCHITECT
APP: 03-124589 INC:
REVIEWED FOR
SS ☑ FLS ☑ ACS ☑
DATE: 04/15/2025

AMS®
American Modular Systems
787 Spreckels Ave., Manteca, CA 95336
Phone (209) 825-1921 Fax (209) 825-7018
www.americanmodular.com

INTELLECTUAL-PROPERTY & PROPRIETARY RIGHTS STATEMENT
COPYRIGHT © AMERICAN MODULAR SYSTEMS (AMS)
AMS OWNS ALL COPYRIGHT AND OTHER INTELLECTUAL-PROPERTY AND PROPRIETARY RIGHTS IN THESE DRAWINGS, SPECIFICATIONS, AND THE MATERIAL CONTAINED HEREIN. CERTAIN ELEMENTS SHOWN IN THESE DOCUMENTS ARE REGISTERED TRADEMARKS OF AMS. ALL PATENTABLE MATERIALS CONTAINED IN THESE DOCUMENTS AND ORIGINATING WITH AMS WILL REMAIN THE SOLE PROPERTY OF AMS. THESE DRAWINGS, SPECIFICATIONS, AND THE MATERIAL CONTAINED HEREIN MAY NOT BE REPRODUCED, TRANSMITTED, COPIED, DISTRIBUTED, MODIFIED, OR OTHERWISE DISPOSED OF (DIRECTLY OR INDIRECTLY) AND MAY NOT BE USED (IN WHOLE OR IN PART) TO ASSIST IN THE CONSTRUCTION, DESIGN, OR OTHER MAKING OF, OR FOR THE PURPOSE OF FURNISHING ANY INFORMATION FOR THE CONSTRUCTION, DESIGN, OR OTHER MAKING OF, ANY BUILDINGS (MODULAR OR OTHERWISE), DRAWINGS, SPECIFICATIONS, PRINTS, APPARATUS, OR PARTS THEREOF, EXCEPT AS EXPRESSLY PERMITTED BY WRITTEN CONSENT OF, OR IN A WRITTEN AGREEMENT WITH, AMS. SUBMITTAL OR DISTRIBUTION TO MEET OFFICIAL REGULATORY REQUIREMENTS WILL NOT BE CONSTRUED AS PUBLICATION IN DEROGATION OF AMS'S COPYRIGHT OR OTHER INTELLECTUAL-PROPERTY OR PROPRIETARY RIGHTS.

PRE-CHECKED SET NAME
72' x 40' BUILDING
STANDARD MODULAR BUILDING
(HIGH SEISMIC)
FORM®

SITE SPECIFIC PROJECT NAME
VENTURA COLLEGE
(1) 72'x40' BUILDING

MANUFACTURER PROFESSIONAL OF RECORD
LICENSED ARCHITECT PATRICK CARNEY No. C12631 Ren. 3-31-25 STATE OF CALIFORNIA

NOT USED | 16

NOT USED | 17

IF WATER HEATER IS MOUNTED ABOVE CIRCULATION AREA, BOTTOM EDGE OF MOUNT AND EQUIPMENT SHALL BE MIN. +80" PER 11B-307. (CLARIFY WHEN OPTIONAL MOUNT IS REQUIRED)

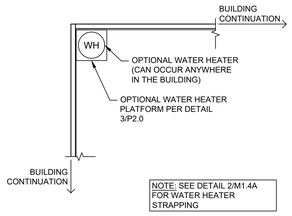

NOTE: SEE DETAIL 2/M1.4A FOR WATER HEATER STRAPPING

NOTE: SEE GENERAL NOTE #5 FOR INTERIOR WALLS

WATER HEATER
SCALE: 1/4" = 1'-0" | 18

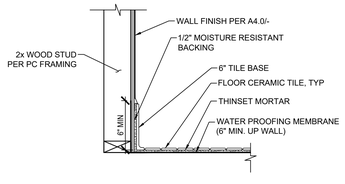

PROTECTION OF WOOD WALLS @ TOILET ROOMS
SCALE: 1/4" = 1'-0" | 19

1 = KEY NOTE - SEE KEY NOTES, THIS SHEET
X = DOOR TYPE - SEE SCHEDULE SHEET N3.0
X = DOOR HARDWARE - SEE HARDWARE SCHEDULE SHEET N3.0
X = WINDOW TYPE - SEE SCHEDULE SHEET N3.0
= 60" DIAMETER CLEAR FLOOR TURNING SPACE
= 30"x48" CLEAR FLOOR SPACE

SYMBOLS LEGEND
SCALE: 1/4" = 1'-0" | 20

REVISIONS
1
2
3
4

DRAWN BY:	AA
SCALE:	AS NOTED
DATE:	03/05/25
PROJECT NO:	1895-24

SHEET TITLE:
RESTROOM & JANITOR FLOOR PLAN
AGE RANGE: 13-ADULT

SHEET NUMBER:
A1.2-M

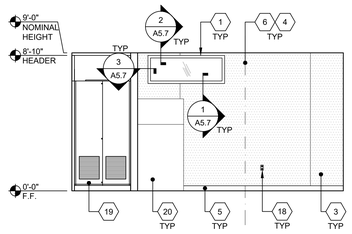

STEM HARBOR FRONT END WALL ELEVATION SCALE : 1/4"=1'-0" 1

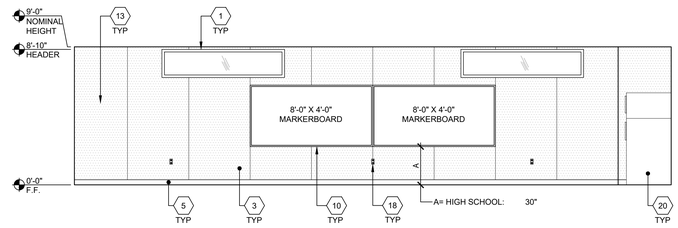

STEM HARDBOR SIDE WALL ELEVATION SCALE : 1/4"=1'-0" 2

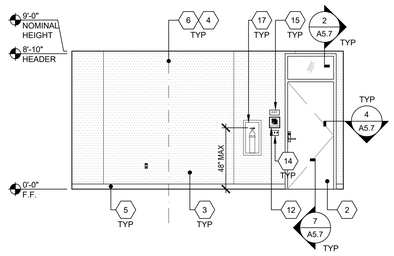

STEM HARBOR REAR END WALL ELEVATION SCALE : 1/4"=1'-0" 3

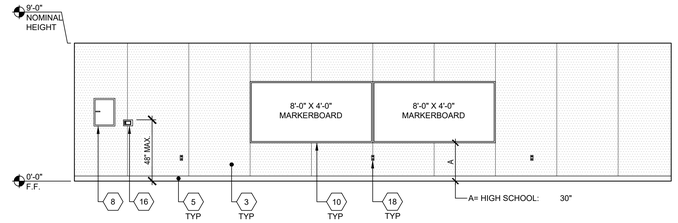

STEM HARBOR SIDE WALL ELEVATION SCALE : 1/4"=1'-0" 4

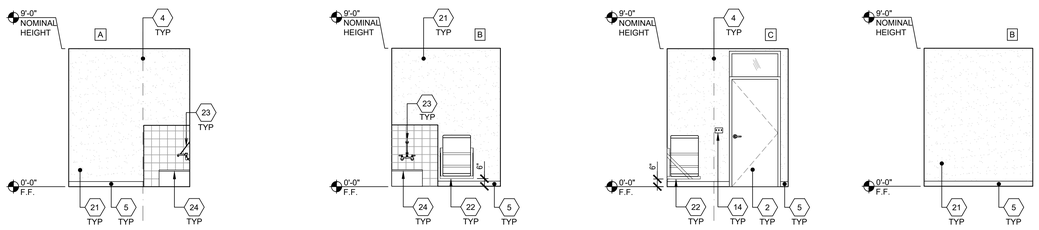

JANITOR - INTERIOR ELEVATIONS SCALE : 1/4"=1'-0" 5

NOT USED 9

NOT USED 10

NOT USED 11

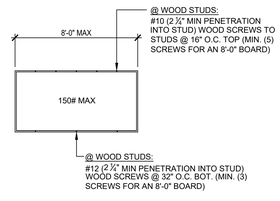

NOTE:
1. ATTACHMENT IS FOR EACH MARKERBOARD.
2. EACH WHITEBOARD SHALL PROTRUDE 4" MAX HORIZONTALLY INTO THE CIRCULATION PATH, PER CBC SECTION 11B-307.2.
3. EACH WHITEBOARD SHALL HAVE FASTENERS PROVIDED BY MANUFACTURER AS NOTED ABOVE.

MARKERBOARD ATT. DETAIL SCALE : 1/4"=1'-0" 12

1. WINDOW, SEE N3.0 SHEET
2. TYP EXTERIOR DOOR - SEE N3.0 SHEET
3. TACKBOARD - (FLAME RESISTANT INDUSTRIAL TACKABLE BOARD) - SHALL BE CLASS A RATED (ASTM E-84). NOMINAL PANEL THICKNESS SHALL BE ± 0.5" AND SHALL BE INSTALED IN ACCORDANCE WITH THE MANUFACTURER'S GUIDELINES.
4. TYP MOD LINE
5. 4" TOP SET BASE
6. FULL PANEL CLOSE-UP AT MOD-LINES, TYP
7. NOT USED
8. ELECTRICAL PANEL - SEE ELECTRICAL SHEETS
9. NOT USED
10. 8'x4' MARKER BOARDS - SEE DETAIL 12/A4.0
11. NOT USED
12. ASSISTIVE LISTENING SIGN, BY OTHERS, INSTALLED PER DETAIL 17/N4.0 SIGN SHALL BE A MAXIMUM OF 70" A.F.F. TO BASELINE OF HIGHEST TEXT.
13. OCCUPANT LOAD SIGN PER DETAIL 11/N4.0 (BY OTHERS)
14. LIGHT SWITCH - SEE ELECTRICAL SHEETS
15. EXIT TACTILE SIGN PER DETAIL 10/N4.0 (NIC)
16. THERMOSTAT, TOP @ 48" A.F.F. - SEE MECHANICAL SHEETS
17. FIRE EXTINGUISHER TOP OF HANDLE @ +48" MAX. A.F.F. PROTRUSION MAX 4" FROM WALL IF BOTTOM OF FIRE EXTINGUISHER GREATER THAN +27" A.F.F - SEE 19/N4.0
18. TYP DUPLEX OUTLET - SEE ELECTRICAL SHEETS
19. INTERIOR HVAC
20. REFRIGERATOR BY OTHERS
21. F.R.P.(FIBER REINFORCED PLASTIC) - SHALL BE CLASS C RATED (ASTM E-84) EMBOSSED & SMOOTH INTERIOR WALL PANELS. NOMINAL PANELS. NOMINAL PANEL THICKNESS SHALL BE ± 0.090 - PANEL SHALL BE INSTALLED IN ACCORDANCE WITH THE MANUFACTURER'S GUIDELINES.
22. WATER HEATER - REFER TO P1.0 & P2.0 FOR DETAILS
23. JANITORS SINK FAUCET. REFER TO P1.0 FOR DETAILS
24. CUSTODIAL SINK - REFER TO P1.0 FOR DETAILS

KEY NOTES

IDENTIFICATION STAMP
DIV. OF THE STATE ARCHITECT
APP: 03-124589 INC:
REVIEWED FOR
SS ☑ FLS ☑ ACS ☑
DATE: 04/15/2025

AMS®
American Modular Systems
787 Spreckels Ave., Manteca, CA 95336
Phone (209) 825-1921 Fax (209) 825-7018
www.americanmodular.com

INTELLECTUAL-PROPERTY & PROPRIETARY RIGHTS STATEMENT
COPYRIGHT © AMERICAN MODULAR SYSTEMS (AMS)
AMS OWNS ALL COPYRIGHT AND OTHER INTELLECTUAL-PROPERTY AND PROPRIETARY RIGHTS IN THESE DRAWINGS, SPECIFICATIONS, AND THE MATERIAL CONTAINED HEREIN. CERTAIN ELEMENTS SHOWN IN THESE DOCUMENTS ARE REGISTERED TRADEMARKS OF AMS. ALL PATENTABLE MATERIALS CONTAINED IN THESE DOCUMENTS AND ORIGINATING WITH AMS WILL REMAIN THE SOLE PROPERTY OF AMS. THESE DRAWING, SPECIFICATIONS, AND THE MATERIAL CONTAINED HEREIN MAY NOT BE REPRODUCED, TRANSMITTED, COPIED, DISTRIBUTED, MODIFIED, OR OTHERWISE DISPOSED OF (DIRECTLY OR INDIRECTLY) AND MAY NOT BE USED (IN WHOLE OR IN PART) TO ASSIST IN THE CONSTRUCTION, DESIGN, OR OTHER MAKING OF, OR FOR THE PURPOSE OF FURNISHING ANY INFORMATION FOR THE CONSTRUCTION, DESIGN, OR OTHER MAKING OF, ANY BUILDINGS (MODULAR OR OTHERWISE), DRAWINGS, SPECIFICATIONS, PRINTS, APPARATUS, OR PARTS THEREOF, EXCEPT AS EXPRESSLY PERMITTED BY WRITTEN CONSENT OF, OR IN A WRITTEN AGREEMENT WITH, AMS. SUBMITTAL OR DISTRIBUTION TO MEET OFFICIAL REGULATORY REQUIREMENTS WILL NOT BE CONSTRUED AS PUBLICATION IN DEROGATION OF AMS'S COPYRIGHT OR OTHER INTELLECTUAL-PROPERTY OR PROPRIETARY RIGHTS.

PRE-CHECKED SET NAME

72' x 40' BUILDING
STANDARD MODULAR BUILDING
(HIGH SEISMIC)

FORM®

SITE SPECIFIC PROJECT NAME

VENTURA COLLEGE
(1) 72'x40' BUILDING

MANUFACTURER PROFESSIONAL OF RECORD

LICENSED ARCHITECT
PATRICK CHAN
No. C12631
Ren. 3-31-25
STATE OF CALIFORNIA

REVISIONS
1
2
3
4

DRAWN BY:	AA
SCALE:	AS NOTED
DATE:	12/30/24
PROJECT NO:	1895-24

SHEET TITLE:

INTERIOR ELEVATIONS
TYPICAL CLASSROOM

SHEET NUMBER:

A4.0-M

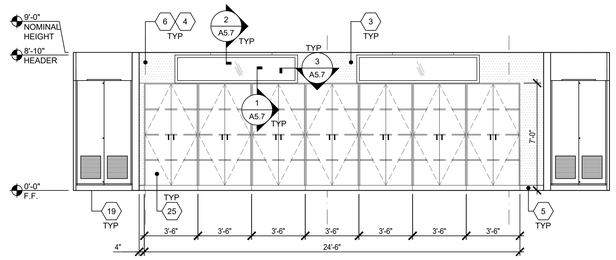

BIOLOGY FRONT END WALL ELEVATION SCALE : 1/4"=1'-0" 1

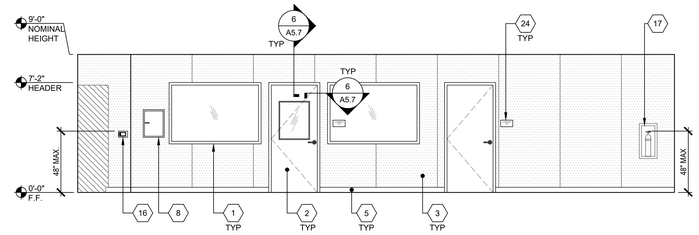

BIOLOGY SIDE WALL ELEVATION SCALE : 1/4"=1'-0" 2

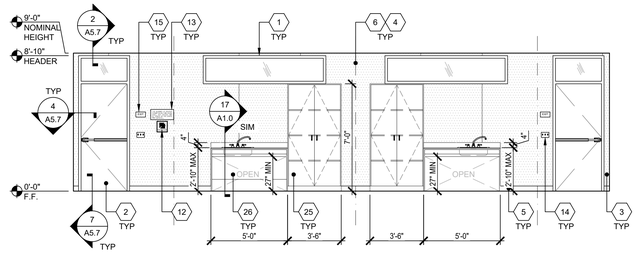

BIOLOGY REAR END WALL ELEVATION SCALE : 1/4"=1'-0" 3

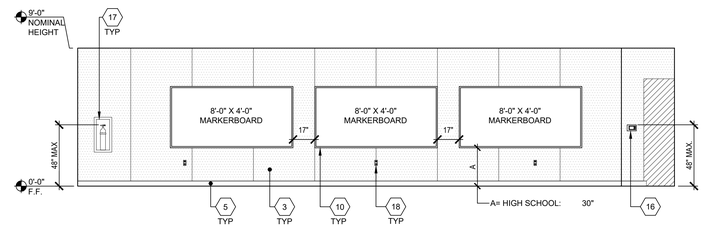

BIOLOGY SIDE WALL ELEVATION SCALE : 1/4"=1'-0" 4

KEY NOTES

1. WINDOW, SEE N3.0 SHEET
2. TYP EXTERIOR DOOR - SEE N3.0 SHEET
3. TACKBOARD - (FLAME RESISTANT INDUSTRIAL TACKABLE BOARD) - SHALL BE CLASS A RATED (ASTM E-84). NOMINAL PANEL THICKNESS SHALL BE ± 0.5" AND SHALL BE INSTALED IN ACCORDANCE WITH THE MANUFACTURER'S GUIDELINES.
4. TYP MOD LINE
5. 4" TOP SET BASE
6. FULL PANEL CLOSE-UP AT MOD-LINES, TYP
7. NOT USED
8. ELECTRICAL PANEL - SEE ELECTRICAL SHEETS
9. NOT USED
10. (4) 8'x4' MARKER BOARDS - SEE DETAIL 8/A4.0
11. NOT USED
12. ASSISTIVE LISTENING SIGN, BY OTHERS, INSTALLED PER DETAIL 17/N4.0 SIGN SHALL BE A MAXIMUM OF 70" A.F.F. TO BASELINE OF HIGHEST TEXT.
13. OCCUPANT LOAD SIGN PER DETAIL 11/N4.0 (BY OTHERS)
14. LIGHT SWITCH - SEE ELECTRICAL SHEETS
15. EXIT TACTILE SIGN PER DETAIL 10/N4.0 (NIC)
16. THERMOSTAT, TOP @ 48" A.F.F. - SEE MECHANICAL SHEETS
17. FIRE EXTINGUISHER TOP OF HANDLE @ +48" MAX. A.F.F. PROTRUSION MAX 4" FROM WALL IF BOTTOM OF FIRE EXTINGUISHER GREATER THAN +27" A.F.F - SEE 19/N4.0
18. TYP DUPLEX OUTLET - SEE ELECTRICAL SHEETS
19. INTERIOR HVAC
20. NOT USED
21. NOT USED
22. NOT USED
23. NOT USED
24. ROOM ID AND ISA SIGNAGE (BY OTHER) SEE DETAILS 5 & 9/N4.0 - TYP
25. CASEWORK - BLOCKING AS NEEDED PER 8/A7.1
26. CASEWORK w/ SINK - BLOCKING AS NEEDED PER 8/A7.1
27. IDF (BY OTHERS) ATTACHMENT BY OTHERS PER E401 ARCH PLANS
28. 3/4" FIRE-RATED PLYWOOD (UNPAINTED w/EXPOSED LOGOS)
29. MINI-SPLIT HIGH WALL AIR HANDLER PER 2/M1.1A
30. VENT/DUCT - REFER TO MECHANICAL SHEETS.

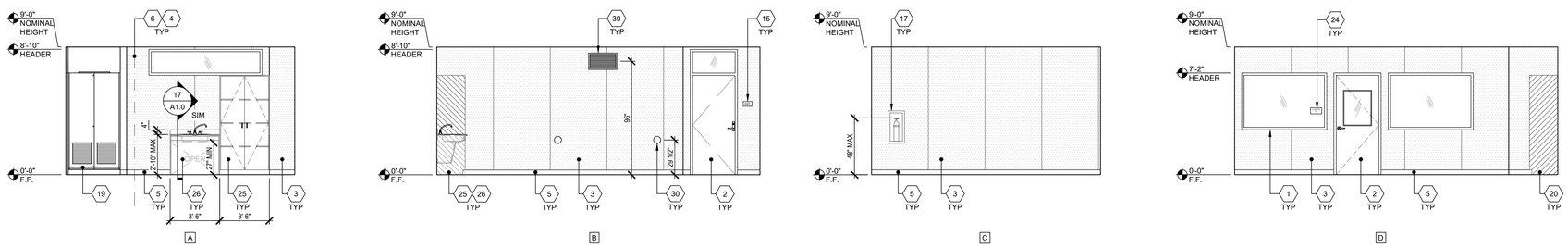

CADAVER ROOM - INTERIOR ELEVATIONS SCALE : 1/4"=1'-0" 5

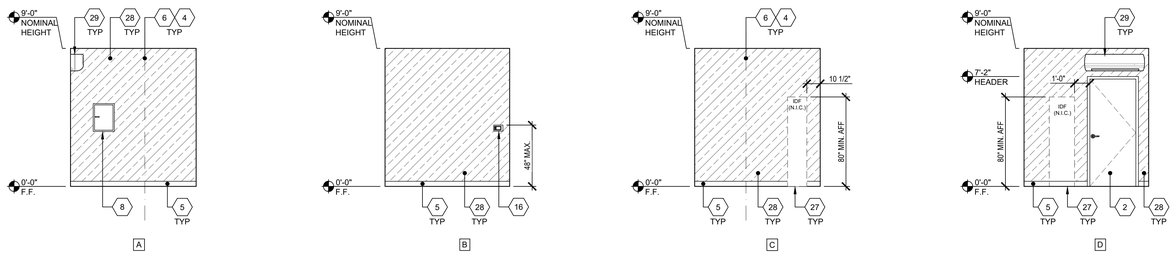

ELECTRICAL/IT - INTERIOR ELEVATIONS SCALE : 1/4"=1'-0" 6

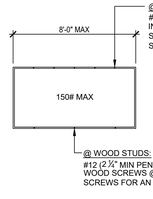

@ WOOD STUDS:
#10 (2 ½" MIN PENETRATION INTO STUD) WOOD SCREWS TO STUDS @ 16" O.C. TOP (MIN. (5) SCREWS FOR AN 8'-0" BOARD)

@ WOOD STUDS:
#12 (2 ½" MIN PENETRATION INTO STUD) WOOD SCREWS @ 32" O.C. BOT. (MIN. (3) SCREWS FOR AN 8'-0" BOARD)

NOTE:
1. ATTACHMENT IS FOR EACH MARKERBOARD.
2. EACH WHITEBOARD SHALL PROTRUDE 4" MAX HORIZONTALLY INTO THE CIRCULATION PATH. PER CBC SECTION 11B-307.2.
3. EACH WHITEBOARD SHALL HAVE FASTENERS PROVIDED BY MANUFACTURER AS NOTED ABOVE.

MARKERBOARD ATT. DETAIL SCALE : 1/4"=1'-0" 8

IDENTIFICATION STAMP
DIV. OF THE STATE ARCHITECT
APP: 03-124589 INC:
REVIEWED FOR
SS ☑ FLS ☑ ACS ☑
DATE: 04/15/2025

AMS®
American Modular Systems
787 Spreckels Ave., Manteca, CA 95336
Phone (209) 825-1921 Fax (209) 825-7018
www.americanmodular.com

INTELLECTUAL-PROPERTY & PROPRIETARY RIGHTS STATEMENT
COPYRIGHT © AMERICAN MODULAR SYSTEMS (AMS)
AMS OWNS ALL COPYRIGHT AND OTHER INTELLECTUAL-PROPERTY AND PROPRIETARY RIGHTS IN THESE DRAWINGS, SPECIFICATIONS, AND THE MATERIAL CONTAINED HEREIN. CERTAIN ELEMENTS SHOWN IN THESE DOCUMENTS ARE REGISTERED TRADEMARKS OF AMS. ALL PATENTABLE MATERIALS CONTAINED IN THESE DOCUMENTS AND ORIGINATING WITH AMS WILL REMAIN THE SOLE PROPERTY OF AMS. THESE DRAWING, SPECIFICATIONS, AND THE MATERIAL CONTAINED HEREIN MAY NOT BE REPRODUCED, TRANSMITTED, COPIED, DISTRIBUTED, MODIFIED, OR OTHERWISE DISPOSED OF (DIRECTLY OR INDIRECTLY) AND MAY NOT BE USED (IN WHOLE OR IN PART) TO ASSIST IN THE CONSTRUCTION, DESIGN, OR OTHER MAKING OF, OR FOR THE PURPOSE OF FURNISHING ANY INFORMATION FOR THE CONSTRUCTION, DESIGN, OR OTHER MAKING OF, ANY BUILDINGS (MODULAR OR OTHERWISE), DRAWINGS, SPECIFICATIONS, PRINTS, APPARATUS, OR PARTS THEREOF, EXCEPT AS EXPRESSLY PERMITTED BY WRITTEN CONSENT OF, OR IN A WRITTEN AGREEMENT WITH, AMS. SUBMITTAL OR DISTRIBUTION TO MEET OFFICIAL REGULATORY REQUIREMENTS WILL NOT BE CONSTRUED AS PUBLICATION IN DEROGATION OF AMS'S COPYRIGHT OR OTHER INTELLECTUAL-PROPERTY OR PROPRIETARY RIGHTS.

PRE-CHECKED SET NAME
72' x 40' BUILDING
STANDARD MODULAR BUILDING
(HIGH SEISMIC)
FORM®

SITE SPECIFIC PROJECT NAME
VENTURA COLLEGE
(1) 72'x40' BUILDING

MANUFACTURER PROFESSIONAL OF RECORD
LICENSED ARCHITECT PATRICK CONLEY No. C12631 Ren. 3-31-25 STATE OF CALIFORNIA

REVISIONS
1
2
3
4

DRAWN BY:	AA
SCALE:	AS NOTED
DATE:	03/05/25
PROJECT NO:	1895-24

SHEET TITLE:
INTERIOR ELEVATIONS
TYPICAL CLASSROOM

SHEET NUMBER:
A4.0-M.A

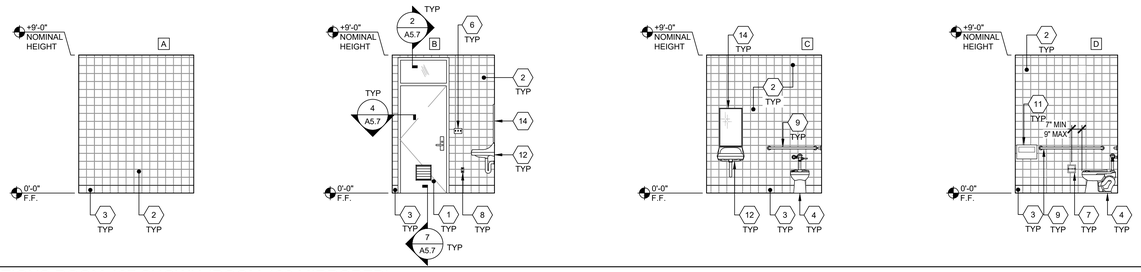

RESTROOM ELEVATIONS ROOM 107 SHOWN (ROOM 106 MIRRORED)

SCALE: 1/4" = 1'-0" 1

NOT USED	2	NOT USED	3	NOT USED	4	NOT USED	5	KEY NOTES	
NOT USED	6	NOT USED	7	NOT USED	8	NOT USED	9	NOT USED	10
NOT USED	11	NOT USED	12	NOT USED	13	NOT USED	14	NOT USED	15
NOT USED	16	NOT USED	17	NOT USED	18	NOT USED	19	NOT USED	20

1. TYPICAL DOOR, SEE N3.0
2. CERAMIC TILE
3. 6" CERAMIC BASE - REFER TO DETAIL 5/A1.2
4. ACCESSIBLE TOILET - SEE DETAIL 14/P2.0
5. NOT USED
6. LIGHT SWITCH - SEE ELECTRICAL SHEETS
7. TOILET PAPER DISPENSER PER P1.0
8. TYP. GFCI OUTLET - SEE ELECTRICAL SHEETS
9. GRAB BAR - SEE DETAIL 6/A7.1
10. NOT USED
11. TOILET SEAT COVER DISPENSER PER P1.0
12. ACCESSIBLE LAVATORY - SEE DETAIL 17/P2.0
13. NOT USED
14. TYP. MIRROR (19" MAX. WEIGHT) - SEE DETAIL 17/P2.0

NOTE: FOR ACCESSIBLE FIXTURES & ACCESSORIES MOUNTING HEIGHT REQUIREMENTS (PER 2022 CBC CHAPTER 11B), SEE SHEET P2.0/10 FOR ACCESSIBLE HEIGHTS TABLE.

IDENTIFICATION STAMP
DIV. OF THE STATE ARCHITECT
APP: 03-124589 INC:
REVIEWED FOR
SS ☑ FLS ☑ ACS ☑
DATE: 04/15/2025

AMS®
American Modular Systems
787 Spreckels Ave., Manteca, CA 95336
Phone (209) 825-1921 Fax (209) 825-7018
www.americanmodular.com

INTELLECTUAL-PROPERTY & PROPRIETARY RIGHTS STATEMENT
COPYRIGHT © AMERICAN MODULAR SYSTEMS (AMS)
AMS OWNS ALL COPYRIGHT AND OTHER INTELLECTUAL-PROPERTY AND PROPRIETARY RIGHTS IN THESE DRAWINGS, SPECIFICATIONS, AND THE MATERIAL CONTAINED HEREIN. CERTAIN ELEMENTS SHOWN IN THESE DOCUMENTS ARE REGISTERED TRADEMARKS OF AMS. ALL PATENTABLE MATERIALS CONTAINED IN THESE DOCUMENTS AND ORIGINATING WITH AMS WILL REMAIN THE SOLE PROPERTY OF AMS. THESE DRAWING, SPECIFICATIONS, AND THE MATERIAL CONTAINED HEREIN MAY NOT BE REPRODUCED, TRANSMITTED, COPIED, DISTRIBUTED, MODIFIED, OR OTHERWISE DISPOSED OF (DIRECTLY OR INDIRECTLY) AND MAY NOT BE USED (IN WHOLE OR IN PART) TO ASSIST IN THE CONSTRUCTION, DESIGN, OR OTHER MAKING OF, OR FOR THE PURPOSE OF FURNISHING ANY INFORMATION FOR THE CONSTRUCTION, DESIGN, OR OTHER MAKING OF, ANY BUILDINGS (MODULAR OR OTHERWISE), DRAWINGS, SPECIFICATIONS, PRINTS, APPARATUS, OR PARTS THEREOF, EXCEPT AS EXPRESSLY PERMITTED BY WRITTEN CONSENT OF, OR IN A WRITTEN AGREEMENT WITH, AMS. SUBMITTAL OR DISTRIBUTION TO MEET OFFICIAL REGULATORY REQUIREMENTS WILL NOT BE CONSTRUED AS PUBLICATION IN DEROGATION OF AMS'S COPYRIGHT OR OTHER INTELLECTUAL-PROPERTY OR PROPRIETARY RIGHTS.

PRE-CHECKED SET NAME
72' x 40' BUILDING
STANDARD MODULAR BUILDING
(HIGH SEISMIC)
FORM®

SITE SPECIFIC PROJECT NAME
VENTURA COLLEGE
(1) 72'x40' BUILDING

MANUFACTURER PROFESSIONAL OF RECORD
LICENSED ARCHITECT
PATRICK CARNAGHI
No. C12631
Ren. 3-31-25
STATE OF CALIFORNIA

REVISIONS
1
2
3
4

DRAWN BY:	AA
SCALE:	AS NOTED
DATE:	12/30/24
PROJECT NO:	1895-24

SHEET TITLE:
RESTROOM
INTERIOR ELEVATIONS

SHEET NUMBER:
A4.1-M

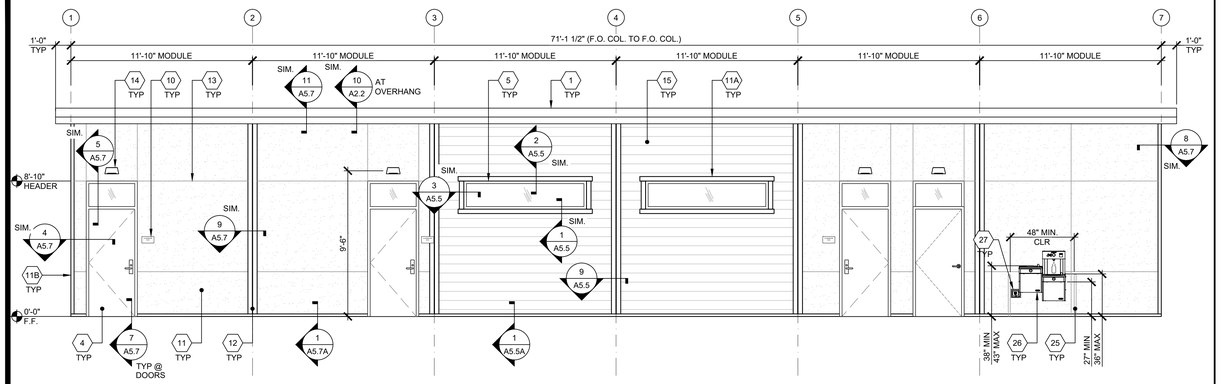

EXTERIOR ELEVATION - FRONT

SCALE : 1/4"=1'-0" | 1

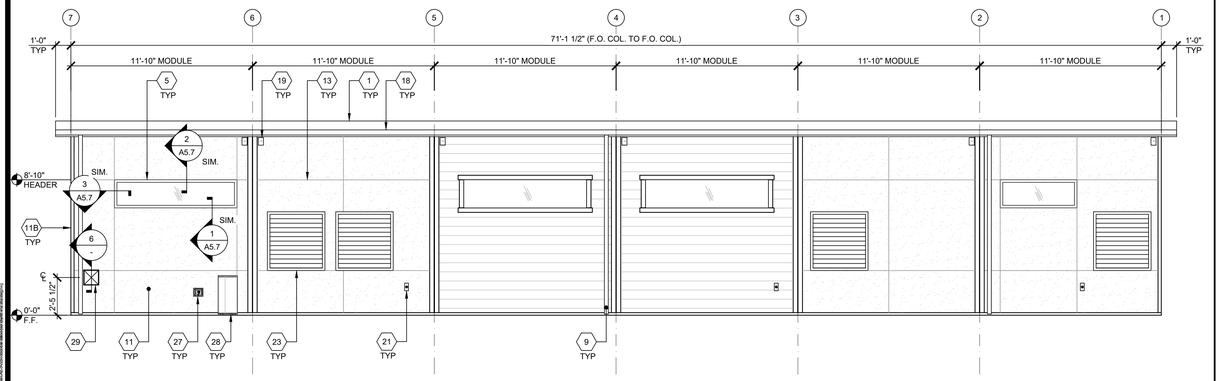

EXTERIOR ELEVATION - REAR

SCALE : 1/4"=1'-0" | 2

INTERIOR

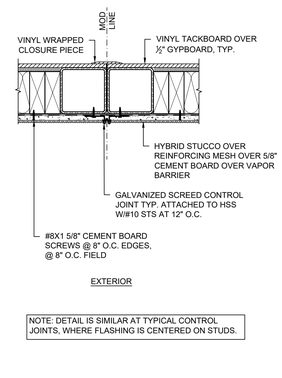

EXTERIOR

NOTE: DETAIL IS SIMILAR AT TYPICAL CONTROL JOINTS, WHERE FLASHING IS CENTERED ON STUDS.

CONTROL JOINT DETAIL

SCALE : 1 1/2"=1'-0" | 5

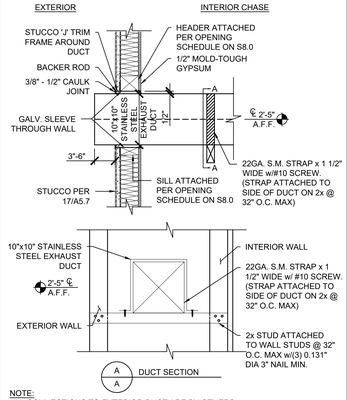

NOTE:
ALL CONNECTIONS TO EXTERIOR DUCT ARE BY OTHERS.

DUCT EXITING BUILDING

SCALE : 1"=1'-0" | 6

1. STANDING SEAM METAL ROOFING
2. NOT USED
3. OVERHANG - SEE STRUCTURAL
4. TYP EXTERIOR DOOR - SEE SCHEDULE SHEET N3.0
5. WINDOW - SEE SCHEDULE SHEET N3.0
6. NOT USED
7. NOT USED
8. NOT USED
9. DOWNSPOUT SEE DETAIL 8/A5.7 FOR ATTACHMENT
10. ROOM ID AND ISA SIGNAGE (BY OTHER) SEE DETAILS 5 & 9/N4.0 - TYP
11. SYNTHETIC STUCCO TEXTURED FINISH
11A. 1x4 TRIM
11B. 18 GA. CORNER FLASHING
12. 18 GA. FLASHING TRIM
13. CONTROL JOINT (LOCATION MAY VARY) - SIMILAR DETAIL 5/- @ STUDS
14. EXTERIOR LIGHT - SEE ELECTRICAL
15. 5/16" HARDIPLANK LAP SIDING
16. NOT USED
17. NOT USED
18. GUTTER - SEE ATTACHMENT DETAIL 5/A2.2 AT STANDING SEAM ROOFING.
19. MODULAR IDENTIFICATION TAG +90" ABOVE A.F.F.
20. NOT USED
21. WP/G.F.C.I. @ HVAC UNITS - REFER TO ELECTRICAL PLANS
22. NOT USED
23. HVAC GRILL
24. NOT USED
25. GUARD RAILS (BY OTHERS) ANCHORED TO FLATWORK
26. HI/LO DRINKING FOUNTAIN W/BOTTLE FILLER - SEE DETAIL 11/P2.0
27. HOSE BIB IN RECESSED VALVE BOX
28. CONDENSER (SITE MOUNTED)
29. EXHAUST DUCT EXITING AMS BUILDING - ALL CONNECTIONS BY OTHERS

KEYNOTES

BUILDING SIZE SCHEDULE

BUILDING SIZE (FT)	TOTAL # OF 12'-0" WIDE MODULES	TOTAL # OF CENTER MODULES	OVERALL BUILDING WIDTH
☐ 24'x40'	2	0	23'-9½"
☐ 36'x40'	3	1	35'-9½"
☐ 48'x40'	4	2	47'-5"
☐ 60'x40'	5	3	59'-9½"
☒ 72'x40'	6	4	71'-1½"
☐ 84'x40'	7	5	82'-11½"
☐ 96'x40'	8	6	94'-10"
☐ 108'x40'	9	7	106'-6½"
☐ 120'x40'	10	8	118'-6½"

NOTES:

1. TOTAL BUILDING WIDTH INCLUDES ½" PER MODULE CONSTRUCTION TOLERANCE PER FOUNDATION SHEET S1.1

BUILDING SIZE SCHEDULE

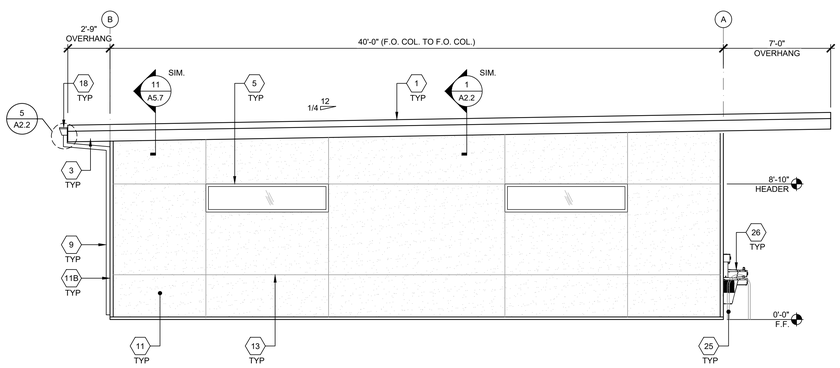

EXTERIOR ELEVATION - LEFT

SCALE : 1/4"=1'-0" | 3

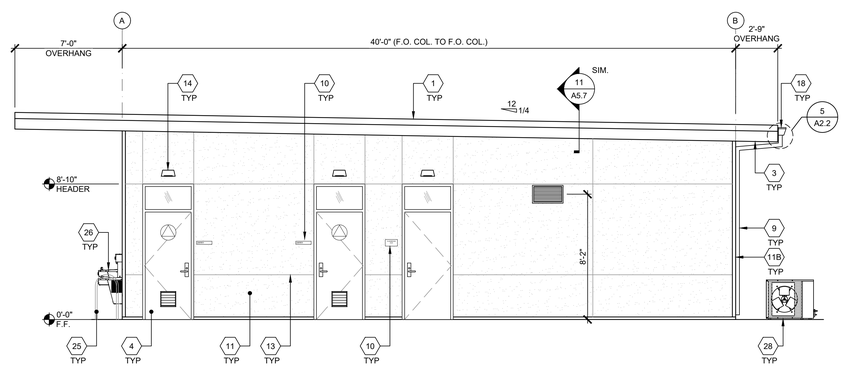

EXTERIOR ELEVATION - RIGHT

SCALE : 1/4"=1'-0" | 4

IDENTIFICATION STAMP
DIV. OF THE STATE ARCHITECT
APP: 03-124589 INC:
REVIEWED FOR
SS ☑ FLS ☑ ACS ☑
DATE: 04/15/2025

AMS®
American Modular Systems
787 Spreckels Ave., Manteca, CA 95336
Phone (209) 825-1921 Fax (209) 825-7018
www.americanmodular.com

INTELLECTUAL-PROPERTY & PROPRIETARY RIGHTS STATEMENT
COPYRIGHT © AMERICAN MODULAR SYSTEMS (AMS)
AMS OWNS ALL COPYRIGHT AND OTHER INTELLECTUAL-PROPERTY AND PROPRIETARY RIGHTS IN THESE DRAWINGS, SPECIFICATIONS, AND THE MATERIAL CONTAINED HEREIN. CERTAIN ELEMENTS SHOWN IN THESE DOCUMENTS ARE REGISTERED TRADEMARKS OF AMS. ALL PATENTABLE MATERIALS CONTAINED IN THESE DOCUMENTS AND ORIGINATING WITH AMS WILL REMAIN THE SOLE PROPERTY OF AMS. THE DRAWINGS, SPECIFICATIONS, AND THE MATERIAL CONTAINED HEREIN MAY NOT BE REPRODUCED, TRANSMITTED, COPIED, DISTRIBUTED, MODIFIED, OR OTHERWISE DISPOSED OF (DIRECTLY OR INDIRECTLY) AND MAY NOT BE USED (IN WHOLE OR IN PART) TO ASSIST IN THE CONSTRUCTION, DESIGN, OR OTHER MAKING OF, OR FOR THE PURPOSE OF FURNISHING ANY INFORMATION FOR THE CONSTRUCTION, DESIGN, OR OTHER MAKING OF, ANY BUILDINGS (MODULAR OR OTHERWISE), DRAWINGS, SPECIFICATIONS, PRINTS, APPARATUS, OR PARTS THEREOF, EXCEPT AS EXPRESSLY PERMITTED BY WRITTEN CONSENT OF, OR IN A WRITTEN AGREEMENT WITH, AMS. SUBMITTAL OR DISTRIBUTION TO MEET OFFICIAL REGULATORY REQUIREMENTS WILL NOT BE CONSTRUED AS PUBLICATION IN DEROGATION OF AMS'S COPYRIGHT OR OTHER INTELLECTUAL-PROPERTY OR PROPRIETARY RIGHTS.

PRE-CHECKED SET NAME

72' x 40' BUILDING
STANDARD MODULAR BUILDING
(HIGH SEISMIC)

FORM®

SITE SPECIFIC PROJECT NAME

VENTURA COLLEGE
(1) 72'x40' BUILDING

MANUFACTURER PROFESSIONAL OF RECORD

LICENSED ARCHITECT
PATRICK CRAWFORD
No. C12631
Ren. 3-31-25
STATE OF CALIFORNIA

REVISIONS

DRAWN BY:	AA
SCALE:	AS NOTED
DATE:	03/05/25
PROJECT NO:	1895-24

SHEET TITLE:

TYPICAL EXTERIOR ELEVATIONS - SYNTHETIC STUCCO OPTION

SHEET NUMBER:

A5.6-M

IN THE EVENT THE FOUNDATION DESIGN AND ENGINEERING IS BY AMS, AND INSTALLATION IS BY OTHERS. AMS IS NOT RESPONSIBLE FOR QUALITY OF INSTALLATION, INSPECTIONS, NOR ACCEPTANCE OF FOUNDATION. ANY REVIEW PERFORMED BY AMS SHALL BE CONSIDERED A COURTESY TO ASSIST WITH THE OVERALL PROJECT SUCCESS AND DOES NOT REMOVE THE CONTRACTOR'S RESPONSIBILITY TO COMPLY WITH PLANS AND SPECIFICATIONS. CONTRACTOR PERFORMING FOUNDATION INSTALLATION IS RESPONSIBLE TO ENSURE THE FOUNDATION IS COMPLETED PER PLANS, SPECIFICATIONS, AND MEETS TOLERANCES FOR MODULAR BUILDINGS AS DESCRIBED BELOW.

CRAWLSPACE TO BE 18" CLEAR MINIMUM FROM TOP OF STEM WALL TO TOP OF CONCRETE SLURRY. CONCRETE SLURRY (IF APPLICABLE) TO BE MIN 2" THICK, AND SLOPED TO UNDERFLOOR DRAINAGE (DRAINAGE TO COMPLY WITH IR 16-1)

TOP OF STEM WALL CANNOT BE MORE THAN 1/8" OUT OF PLANE, PLUMB AND LEVEL (HORIZONTAL, VERTICAL AND SQUARE, DIAGONAL) OVER THE OVERALL LENGTH AND WIDTH OF THE FOUNDATION FOOTPRINT.

AMS WILL NOT PROVIDE SUPERVISION NOR SIGN OFF ON WORK PERFORMED BY OTHERS.

IN THE EVENT ENGINEERING IS REQUIRED TO ACCOMMODATE ERROR'S OR OMISSION'S, REWORK, OR ADDITIONAL COORDINATION/ENGINEERING ALL EXPENSES SHALL BE REIMBURSED TO AMS.

SUBCONTRACTOR PERFORMING CONCRETE FOUNDATION INSTALLATION MUST MEET THE FOLLOWING QUALIFICATIONS:

1 - A MINIMUM OF 5 YEARS CONTINUOUS AND CURRENT EXPERIENCE INSTALLING MODULAR (PIT SET) FOUNDATIONS.

2. A MINIMUM OF 5 YEARS CONTINUOUS AND CURRENT EXPERIENCE WITH PUBLIC WORKS PROJECTS SPECIFIC TO EDUCATION.

3. A MINIMUM OF 5 YEARS CONTINUOUS AND CURRENT EXPERIENCE WORKING ON DIVISION OF STATE ARCHITECT (D.S.A.) APPROVED AND INSPECTED PROJECTS.

NOT USED | A | NOT USED | A1

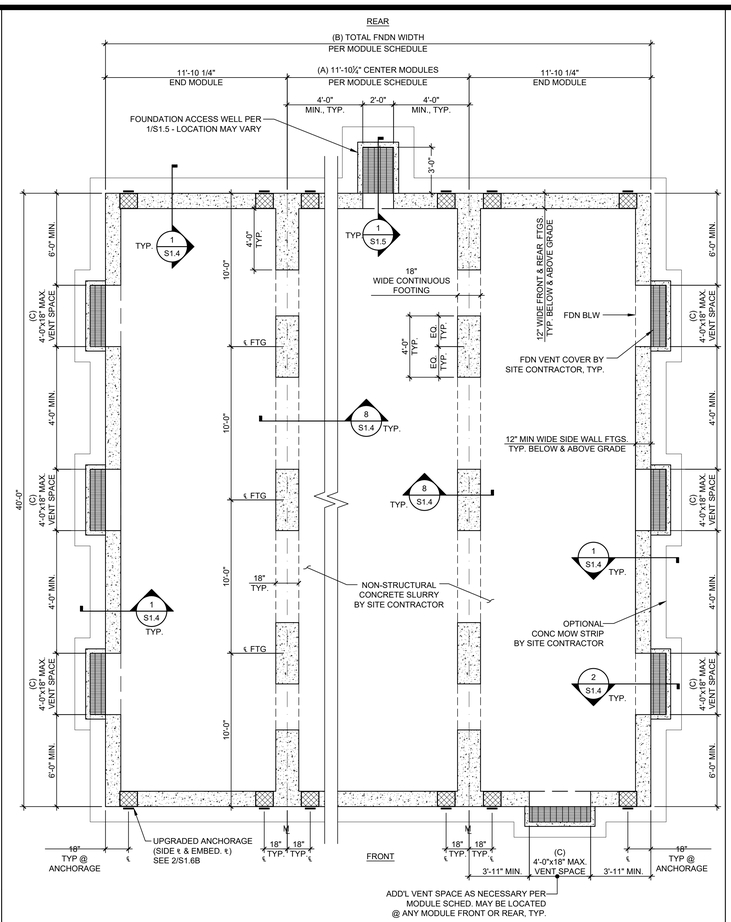

CONCRETE FOUNDATION PLAN (CONCRETE FLOOR)
50 PSF LIVE LOAD + 15 PSF PARTITION LOAD

SCALE: 1/4"=1'-0"

B | NOT USED | B1

1. CONCRETE MIXTURES:
   A. ULTIMATE 28-DAY CONCRETE COMPRESSIVE STRENGTH (f'c) SHALL BE PER SHEET N1.0A
   B. PROPORTIONING OF CONCRETE MIXTURES SHALL BE IN ACCORDANCE WITH ACI 318-19, SECTION 26.4.3.
   C. DOCUMENTATION OF CONCRETE MIXTURE CHARACTERISTICS SHALL BE IN ACCORDANCE WITH ACI 318-19, SECTION 26.4.4.
   D. CEMENT SHALL BE CERTIFIED PER TITLE 24, PART 2, SECTION 1910A.1.
   E. SEE SHEET N1.0 FOR ADDITIONAL CONCRETE NOTES.

2. BUILDINGS MAY BE SET ON CONCRETE FOUNDATIONS THAT HAVE REACHED A MINIMUM CONCRETE COMPRESSIVE STRENGTH OF 2,500 PSI. PRIOR TO THE SETTING OF THE MODULAR BUILDING ON CONCRETE FOUNDATIONS THAT HAVE NOT YET CURED 28 DAYS POST PLACEMENT OF FOUNDATION CONCRETE, THE FOUNDATION CONTRACTOR SHALL
   A. HAVE THE PROJECT TESTING LAB PERFORM CONCRETE CYLINDER COMPRESSION TESTS OF THE FOUNDATION CONCRETE USED AT THE SITE,
   B. FURNISH THE PROJECT IOR AND THE REGISTERED DESIGN PROFESSIONAL IN RESPONSIBLE CHARGE WITH THE CONCRETE TEST REPORTS VERIFYING THAT THE FOUNDATION CONCRETE HAS REACHED THE MINIMUM STRENGTH AS SPECIFIED ABOVE, AND
   C. NOTIFY THE PROJECT IOR AND THE REGISTERED DESIGN PROFESSIONAL IN RESPONSIBLE CHARGE OF THEIR INTENT TO SET THE MODULAR BUILDING PRIOR TO 28 DAYS POST PLACEMENT OF FOUNDATION CONCRETE.

3. REINFORCING STEEL SHALL BE 60,000 PSI MINIMUM, PER ASTM A615. THE REINFORCING BARS SHALL BE TESTED PER TITLE 24, PART 2, SECTION 1910A.2. TEST OF REINFORCING BARS MAY BE WAIVED PROVIDED CERTIFIED MILL TEST REPORTS ARE PROVIDED FOR EACH SHIPMENT OF SUCH REINFORCEMENT.

4. DESIGN SOIL BEARING CAPACITY: 1500 PSF.
   (1/3 INCREASE IN SOIL BEARING CAPACITY NOT PERMITTED FOR WIND & SEISMIC LOAD COMBINATIONS UNLESS USING ALTERNATIVE BASIC LOAD COMBINATIONS PER CBC SECTION 1605A.3.2)

5. THE REGISTERED DESIGN PROFESSIONAL IN RESPONSIBLE CHARGE SHALL VERIFY THE NET AREA OF THE UNDER-FLOOR VENTING IS EQUAL TO OR LARGER THAN THE VENT AREA REQUIRED (AS SHOWN ON THE ADJACENT TABLE).

6. EXPANSIVE, ORGANIC, LOOSE, OR SOFT SOILS SHALL NOT BE UTILIZED FOR SUPPORT OF FOOTINGS. AMS AND ITS CONSULTANTS ARE NOT RESPONSIBLE FOR THE EFFECTS DUE TO EXPANSIVE SOILS OR SETTLEMENTS DUE TO ORGANIC, LOOSE, OR SOFT SOILS. IT IS THE OWNER'S RESPONSIBILITY TO ENSURE COMPLIANCE WITH THESE REQUIREMENTS.

NOTES

	NOMINAL BLDG SIZE (FT)	TOTAL # OF 12' WIDE MODULES	"A" TOTAL # OF CENTER MODULES	"B" TOTAL FNDN WIDTH[1]	TOTAL NOMINAL FLOOR AREA (FT^2)	NET FREE VENT AREA REQ'D[2] (FT^2)	IF 4'x12" VENTS ARE USED SOLELY		IF 4'x18" VENTS ARE USED SOLELY	
							"C" MIN. TOTAL VENTS REQ'D[3]	NET FREE VENT AREA PROVIDED[3] (FT^2)	"C" MIN. TOTAL VENTS REQ'D[3]	NET FREE VENT AREA PROVIDED[3] (FT^2)
☐	24'x40'	2	0	23'-8½"	960	6.4	3	8.7	2	8.8
☐	36'x40'	3	1	35'-6¼"	1440	9.6	4	11.6	3	13.1
☐	48'x40'	4	2	47'-5"	1920	12.8	5	14.6	4	17.5
☐	60'x40'	5	3	59'-3¾"	2400	16.0	6	17.5	4	17.5
☒	72'x40'	6	4	71'-1½"	2880	19.2	7	20.4	5	21.9
☐	84'x40'	7	5	82'-11¼"	3360	22.4	8	23.3	6	26.3
☐	96'x40'	8	6	94'-10"	3840	25.6	9	26.2	6	26.3
☐	108'x40'	9	7	106'-8¾"	4320	28.8	10	29.2	7	30.7
☐	120'x40'	10	8	118'-6½"	4800	32.0	11	32.1	8	35.0

NOTES:

TOTAL FOUNDATION WIDTH INCLUDES ¼" PER MODULE CONSTRUCTION TOLERANCE.

1. UNLESS NOTED OTHERWISE, DIMENSIONS ARE FROM FACE OF CONCRETE TO FACE OF CONCRETE (FOC TO FOC)

2. THE NUMBER OF VENTS REQUIRED IS BASED ON THE VENT NET FREE AREA (NFA) PROVIDED BEING GREATER OR EQUAL TO THE VENT NFA REQUIRED. VENT NFA REQUIRED IS BASED ON A 1:150 VENTILATION RATIO OF THE NOMINAL BUILDING FLOOR AREA. VENT NFA PROVIDED IS THE ACTUAL OPEN AREA WITH A VENT GROSS AREA REDUCTION PERCENTAGE OF 73% & NUMBER OF VENTS PROVIDED.

$NFA_{REQUIRED} = A_{FLOOR} / 150$ $NFA_{PROVIDED} > NFA_{REQUIRED}$ $A_{VENT,GROSS}$ x 73% x (# OF VENTS) > $NFA_{REQUIRED}$

4. REQUIRED VENTING MAY BE ACHIEVED BY A COMBINATION OF ACCESS VENT(S) AND VENTS OF DIFFERENT SIZES BASED ON THE VALUES LISTED BELOW.

4'x12" VENTS x 0.73 x (# OF VENTS) = 2.92 FT^2 x (# OF VENTS) **4'x18" VENTS** x 0.73 x (# OF VENTS) = 4.38 FT^2 x (# OF VENTS)
ACCESS VENTS - 2' x1.5' x (# OF VENTS) = 3.00 FT^2 x (# OF VENTS)

MODULE SCHEDULE AND VENTING

IDENTIFICATION STAMP
DIV. OF THE STATE ARCHITECT
APP: 03-124589 INC:
REVIEWED FOR
SS ☑ FLS ☑ ACS ☑
DATE: 04/15/2025

AMS®
American Modular Systems
787 Spreckels Ave., Manteca, CA 95336
Phone (209) 825-1921 Fax (209) 825-7018
www.americanmodular.com

INTELLECTUAL-PROPERTY & PROPRIETARY RIGHTS STATEMENT
COPYRIGHT © AMERICAN MODULAR SYSTEMS (AMS)
AMS OWNS ALL COPYRIGHT AND OTHER INTELLECTUAL-PROPERTY AND PROPRIETARY RIGHTS IN THESE DRAWINGS, SPECIFICATIONS, AND THE MATERIAL CONTAINED HEREIN. CERTAIN ELEMENTS SHOWN IN THESE DOCUMENTS ARE REGISTERED TRADEMARKS OF AMS. ALL PATENTABLE MATERIALS CONTAINED IN THESE DOCUMENTS AND ORIGINATING WITH AMS WILL REMAIN THE SOLE PROPERTY OF AMS. THESE DRAWING, SPECIFICATIONS AND THE MATERIAL CONTAINED HEREIN MAY NOT BE REPRODUCED, TRANSMITTED, COPIED, DISTRIBUTED, MODIFIED, OR OTHERWISE DISPOSED OF (DIRECTLY OR INDIRECTLY) AND MAY NOT BE USED (IN WHOLE OR IN PART) TO ASSIST IN THE CONSTRUCTION, DESIGN, OR OTHER MAKING OF, OR FOR THE PURPOSE OF FURNISHING ANY INFORMATION FOR THE CONSTRUCTION, DESIGN, OR OTHER MAKING OF, ANY BUILDINGS (MODULAR OR OTHERWISE), DRAWINGS, SPECIFICATIONS, PRINTS, APPARATUS, OR PARTS THEREOF, EXCEPT AS EXPRESSLY PERMITTED BY WRITTEN CONSENT OF, OR IN A WRITTEN AGREEMENT WITH, AMS. SUBMITTAL OR DISTRIBUTION TO MEET OFFICIAL REGULATORY REQUIREMENTS WILL NOT BE CONSTRUED AS PUBLICATION IN DEROGATION OF AMS'S COPYRIGHT OR OTHER INTELLECTUAL-PROPERTY OR PROPRIETARY RIGHTS.

PRE-CHECKED SET NAME
72' x 40' BUILDING
STANDARD MODULAR BUILDING
(HIGH SEISMIC)
FORM®

SITE SPECIFIC PROJECT NAME
VENTURA COLLEGE
(1) 72'x40' BUILDING

MANUFACTURER PROFESSIONAL OF RECORD
LICENSED ARCHITECT PATRICK O'HARA No. C12631 Ren. 3-31-25 STATE OF CALIFORNIA
REGISTERED PROFESSIONAL ENGINEER MARK D. FINNEY No. S3380 Exp. 03/31/26 STRUCTURAL STATE OF CALIFORNIA
RST#24149
12/30/2024

REVISIONS
1
2
3
4

DRAWN BY:	AA
SCALE:	AS NOTED
DATE:	12/20/24
PROJECT NO:	1895-24

SHEET TITLE:
CONCRETE FOUNDATION PLAN
(50 PSF LIVE LOAD + 15 PSF
FLOOR PARTITION LOAD)

SHEET NUMBER:
S1.1-M

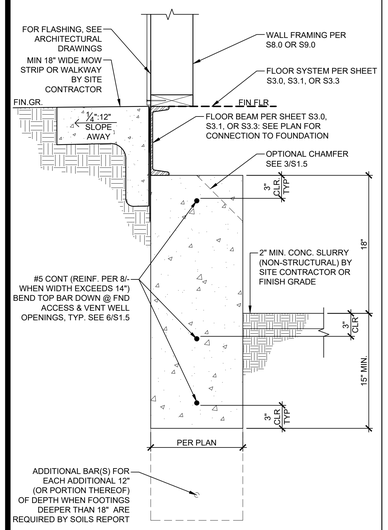

TYP. FOOTING - BELOW GRADE SCALE: 1-1/2" = 1'-0" | 1

NOT USED | 1A

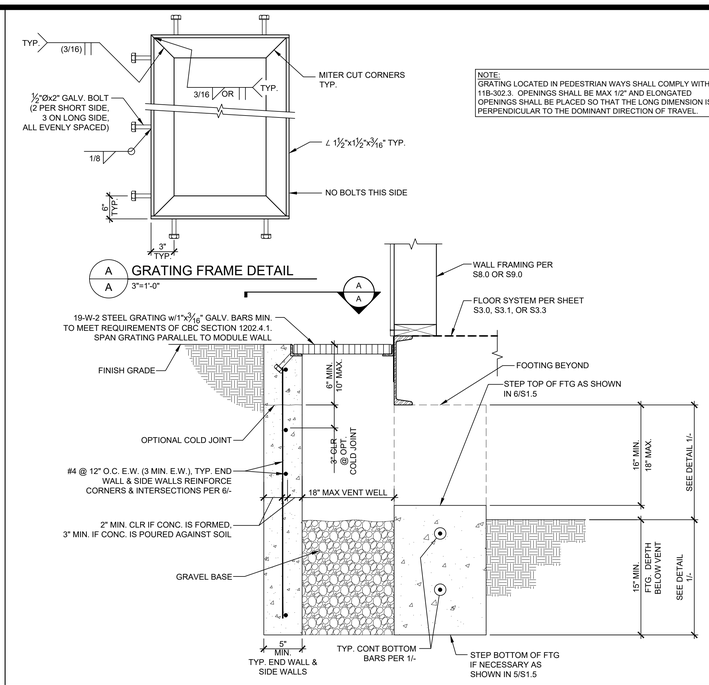

NOTE:
GRATING LOCATED IN PEDESTRIAN WAYS SHALL COMPLY WITH 11B-302.3. OPENINGS SHALL BE MAX 1/2" AND ELONGATED OPENINGS SHALL BE PLACED SO THAT THE LONG DIMENSION IS PERPENDICULAR TO THE DOMINANT DIRECTION OF TRAVEL.

TYP. VENT DETAIL - BELOW GRADE SCALE: 1-1/2" = 1'-0" | 2

NOT USED | 2A

NOT USED | 3

NOT USED | 3A

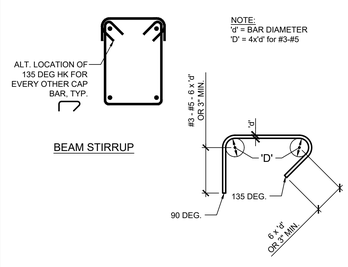

TYPICAL HOOP-STIRRUP DETAIL SCALE: 1-1/2" = 1'-0" | 5

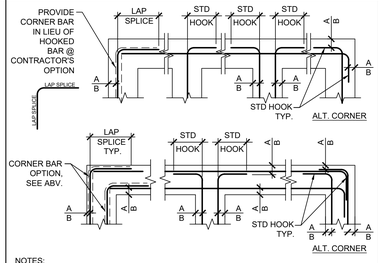

NOTES:
1. LAP SPLICE SHALL BE TYPICAL CLASS B SPLICE PER DETAIL 9/-
2. HOOK LENGTH SHALL BE MIN 12d OR 12", WHICHEVER IS GREATER, WHERE d = DIAMETER OF THE BAR.
3. "A" = 2" COVER @ FORMED FOOTING
4. "B" = 3" COVER @ UNFORMED FOOTING

TYPICAL FOOTING REINFORCING SCALE: 1-1/2" = 1'-0" | 6

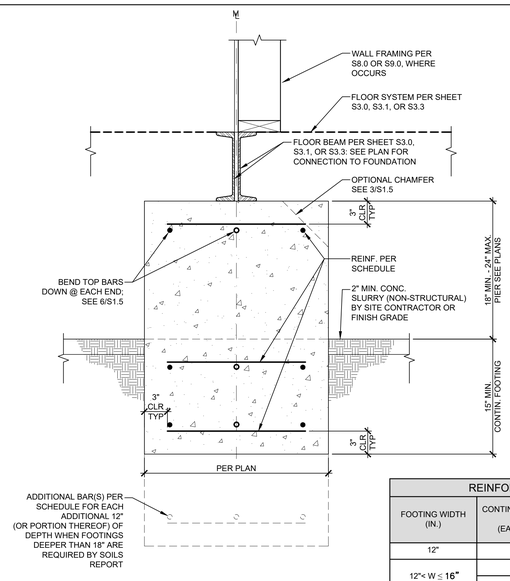

REINFORCING SCHEDULE		
FOOTING WIDTH (IN.)	CONTINUOUS LONGITUDINAL REINFORCING (EACH HORIZ. LEVEL)	TRANSVERSE REINFORCING (EACH HORIZ. LEVEL)
12"	(1) #5	NOT REQ'D
12"< W ≤ 16"	(1) #6	NOT REQ'D
	(2) #5	#4 @ 24" O.C.
16"< W ≤ 24"	(2) #5	#4 @ 24" O.C.
24"< W ≤ 36"	(3) #5	#4 @ 24" O.C.
36"< W ≤ 48"	(4) #5	#4 @ 24" O.C.

TYPICAL INTERIOR MODLINE FOOTING SECTION | 8

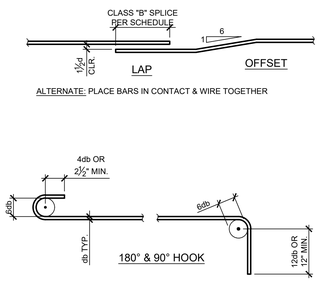

BAR SIZE #	DEVELOPMENT LENGTH[3]			TYPICAL CLASS B LAP SPLICE LENGTH[4]					
	3000 PSI (IN)	3500 PSI (IN)	4000+ PSI (IN)	3000 PSI		3500 PSI		4000+ PSI	
				TOP[2] (IN)	BOTTOM (IN)	TOP[2] (IN)	BOTTOM (IN)	TOP[2] (IN)	BOTTOM (IN)
3	13	12	12	21	16	20	16	20	16
4	17	16	15	28	22	26	20	24	19
5	21	20	18	35	27	33	25	30	24
6	25	23	22	42	32	39	30	36	28

NOTES:
1. THE ABOVE TABLE IS BASED ON GRADE 60 STEEL
2. TOP BARS ARE ANY BARS WITH MORE THAN 12" OF CONCRETE PLACED BELOW.
3. DEVELOPMENT LENGTH IS CALCULATED FOR TYP. BARS - Ψ_t=1.0
4. LAP SPLICES IN ADJACENT BARS SHALL BE STAGGERED, UNLESS OTHERWISE NOTED.

TYP. REINFORCING LAPS & BENDS SCALE: 1-1/2" = 1'-0" | 9

IDENTIFICATION STAMP
DIV. OF THE STATE ARCHITECT
APP: 03-124589 INC:
REVIEWED FOR
SS ☑ FLS ☑ ACS ☑
DATE: 04/15/2025

AMS®
American Modular Systems
787 Spreckels Ave., Manteca, CA 95336
Phone (209) 825-1921 Fax (209) 825-7018
www.americanmodular.com

INTELLECTUAL-PROPERTY & PROPRIETARY RIGHTS STATEMENT
COPYRIGHT © AMERICAN MODULAR SYSTEMS (AMS)
AMS OWNS ALL COPYRIGHT AND OTHER INTELLECTUAL-PROPERTY AND PROPRIETARY RIGHTS IN THESE DRAWINGS, SPECIFICATIONS, AND THE MATERIAL CONTAINED HEREIN. CERTAIN ELEMENTS SHOWN IN THESE DOCUMENTS ARE REGISTERED TRADEMARKS OF AMS. ALL PATENTABLE MATERIALS CONTAINED IN THESE DOCUMENTS AND ORIGINATING WITH AMS WILL REMAIN THE SOLE PROPERTY OF AMS. THESE DRAWING, SPECIFICATIONS, AND THE MATERIAL CONTAINED HEREIN MAY NOT BE REPRODUCED, TRANSMITTED, COPIED, DISTRIBUTED, MODIFIED, OR OTHERWISE DISPOSED OF (DIRECTLY OR INDIRECTLY) AND MAY NOT BE USED (IN WHOLE OR IN PART) TO ASSIST IN THE CONSTRUCTION, DESIGN, OR OTHER MAKING OF, OR FOR THE PURPOSE OF FURNISHING ANY INFORMATION FOR THE CONSTRUCTION, DESIGN, OR OTHER MAKING OF, ANY BUILDINGS (MODULAR OR OTHERWISE), DRAWINGS, SPECIFICATIONS, PRINTS, APPARATUS, OR PARTS THEREOF, EXCEPT AS EXPRESSLY PERMITTED BY WRITTEN CONSENT OF, OR IN A WRITTEN AGREEMENT WITH, AMS. SUBMITTAL OR DISTRIBUTION TO MEET OFFICIAL REGULATORY REQUIREMENTS WILL NOT BE CONSTRUED AS PUBLICATION IN DEROGATION OF AMS'S COPYRIGHT OR OTHER INTELLECTUAL-PROPERTY OR PROPRIETARY RIGHTS.

PRE-CHECKED SET NAME
72' x 40' BUILDING
STANDARD MODULAR BUILDING
(HIGH SEISMIC)
FORM®

SITE SPECIFIC PROJECT NAME
VENTURA COLLEGE
(1) 72'x40' BUILDING

MANUFACTURER PROFESSIONAL OF RECORD
LICENSED ARCHITECT PATRICK CHARLES MANGAN No. C12631 Ren. 3-31-25 STATE OF CALIFORNIA
REGISTERED PROFESSIONAL ENGINEER MARK D. FINNEY No. S3380 Exp. 03/31/26 STRUCTURAL STATE OF CALIFORNIA
RST#24149
12/30/2024

REVISIONS
1
2
3
4

DRAWN BY:	AA
SCALE:	AS NOTED
DATE:	12/20/24
PROJECT NO:	1895-24

SHEET TITLE:
CONCRETE FOUNDATION DETAILS

SHEET NUMBER:
S1.4-M

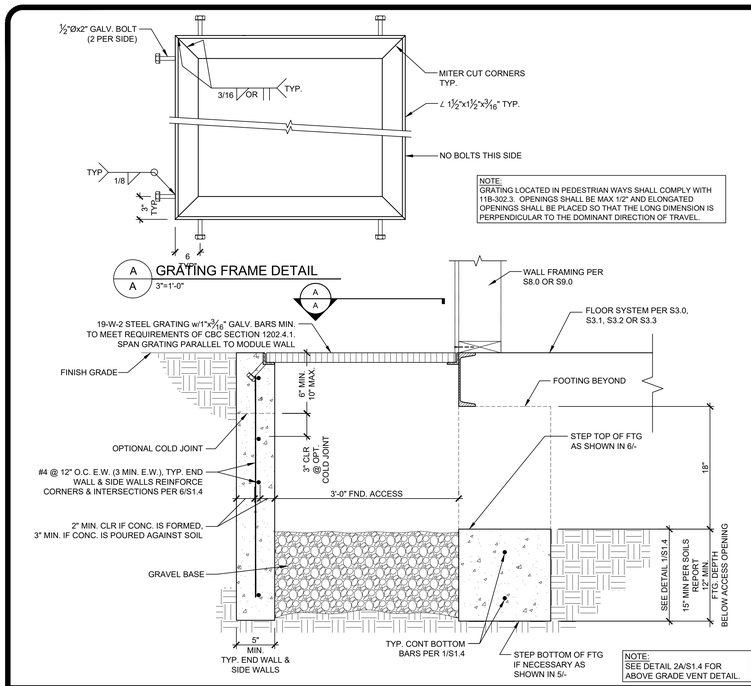

NOTE:
GRATING LOCATED IN PEDESTRIAN WAYS SHALL COMPLY WITH 11B-302.3. OPENINGS SHALL BE MAX 1/2" AND ELONGATED OPENINGS SHALL BE PLACED SO THAT THE LONG DIMENSION IS PERPENDICULAR TO THE DOMINANT DIRECTION OF TRAVEL.

NOTE:
SEE DETAIL 2A/S1.4 FOR ABOVE GRADE VENT DETAIL.

BELOW GRADE SECTION / ACCESS WELL DETAIL

SCALE:1 1/2"=1'-0" | 1

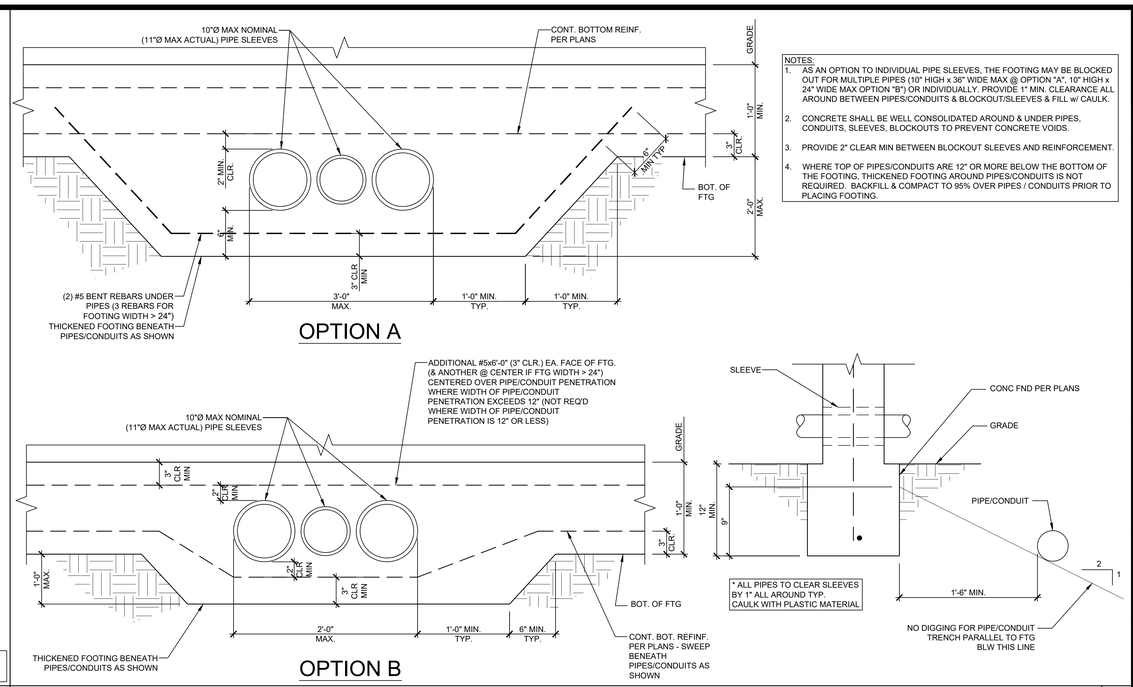

NOTES:
1. AS AN OPTION TO INDIVIDUAL PIPE SLEEVES, THE FOOTING MAY BE BLOCKED OUT FOR MULTIPLE PIPES (10" HIGH x 36" WIDE MAX @ OPTION "A", 10" HIGH x 24" WIDE MAX OPTION "B") OR INDIVIDUALLY. PROVIDE 1" MIN. CLEARANCE ALL AROUND BETWEEN PIPES/CONDUITS & BLOCKOUT/SLEEVES & FILL w/ CAULK.
2. CONCRETE SHALL BE WELL CONSOLIDATED AROUND & UNDER PIPES, CONDUITS, SLEEVES, BLOCKOUTS TO PREVENT CONCRETE VOIDS.
3. PROVIDE 2" CLEAR MIN BETWEEN BLOCKOUT SLEEVES AND REINFORCEMENT.
4. WHERE TOP OF PIPES/CONDUITS ARE 12" OR MORE BELOW THE BOTTOM OF THE FOOTING, THICKENED FOOTING AROUND PIPES/CONDUITS IS NOT REQUIRED. BACKFILL & COMPACT TO 95% OVER PIPES / CONDUITS PRIOR TO PLACING FOOTING.

* ALL PIPES TO CLEAR SLEEVES BY 1" ALL AROUND TYP. CAULK WITH PLASTIC MATERIAL

PIPE SLEEVE DETAIL

SCALE: 1-1/2"=1'-0" | 2

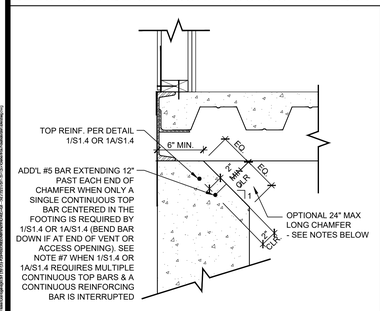

NOTES:
1. CHAMFER MAY BE LOCATED ALONG ALL LOCATIONS OF THE PERIMETER OF THE BUILDING FOUNDATION UNLESS OTHERWISE NOTED ON PLAN OR AS DESCRIBED BELOW.
2. CHAMFER SHALL NOT BE LOCATED WITHIN 3'-6" OF THE CORNERS OF THE BUILDING FOUNDATION.
3. CHAMFERS AT FRONT OR REAR END WALL FOOTINGS SHALL NOT BE LOCATED WITHIN 2'-0" OF A MODULE LINE
4. CHAMFER SHALL NOT BE LOCATED WITHIN 1'-6" OF ANCHORAGE EMDED. PLATE LOCATION.
5. CHAMFERS SHALL NOT BE LOCATED WITHIN 1'-6" OF UTILITY OPENINGS PER SHEET S1.7
6. CHAMFER MAY OCCUR AT THE ENDS OF VENT OR ACCESS OPENINGS (ALONG THE INTERIOR EDGE OF THE STEMWALL PARALLEL TO THE FLOOR BEAM AS SHOWN ABOVE)
7. BOTTOM OF CHAMFER SHALL NOT BE LOWER THAN FINISHED GRADE
8. WHEN 1/S1.4 OR 1A/S1.4 REQUIRED MULTIPLE CONTINUOUS TOP BARS AND THE CHAMFER INTERRUPTS A CONTINUOUS LONGITUDINAL REINFORCING BAR, PROVIDE AN ADDITIONAL #5 x 6'-0" BAR 2" CLEAR AND CENTERED ON THE CHAMFER (BEND BAR DOWN IF AT END OF VENT OR ACCESS OPENING)
9. FOR ALL ITEMS NOT SHOWN OR NOTED SEE DETAILS 1/S1.4 & 1A/S1.4.

CHAMFER DETAILS @ PERIMETER

SCALE:1 1/2"=1'-0" | 3

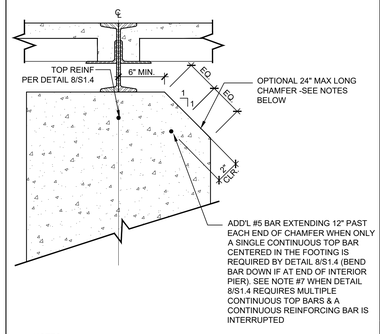

NOTES:
1. CHAMFER MAY BE LOCATED ALONG ALL LOCATIONS OF INTERIOR FOOTING OF THE BUILDING FOUNDATION UNLESS OTHERWISE NOTED ON PLAN OR AS DESCRIBED BELOW.
2. CHAMFER SHALL NOT BE LOCATED WITHIN 2'-6" OF THE ENDS OF THE BUILDING.
3. CHAMFER MAY OCCUR ON BOTH SIDES OF THE FOOTING CONCURRENTLY.
4. CHAMFER SHALL NOT BE LOCATED WITHIN 1'-6" OF UTILITY OPENING PER SHEET S1.7
5. CHAMFER MAY OCCUR AT THE ENDS OF INTERIOR PIERS (ALONG THE SIDE OF THE PIER PARALLEL TO THE FLOOR BEAMS AS SHOWN ABOVE)
6. BOTTOM OF CHAMFER SHALL NOT BE LOWER THAN FINISHED GRADE
7. WHEN DETAIL 8/S1.4 REQUIRES MULTIPLE CONTINUOUS TOP BARS AND THE CHAMFER INTERRUPTS A CONTINUOUS LONGITUDINAL REINFORCING BAR, PROVIDE AN ADDITIONAL #5 x 6'-0" BAR 2" CLEAR AND CENTERED ON THE CHAMFER (BEND BAR DOWN IF AT END OF INTERIOR PIER)
8. FOR ALL ITEMS NOT SHOWN OR NOTED - SEE DETAIL 8/S1.4.

CHAMFER DETAILS @ INTERIOR

SCALE:1 1/2"=1'-0" | 4

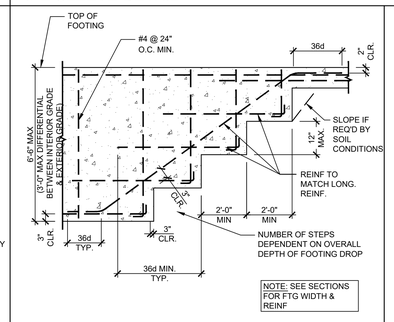

NOTE: SEE SECTIONS FOR FTG WIDTH & REINF

TYPICAL STEPPED FOOTING DETAIL

SCALE:1 1/2"=1'-0" | 5

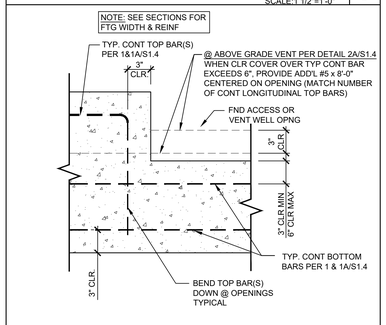

VENT/ACCESS OPENING DETAIL

SCALE:1 1/2"=1'-0" | 6

NOT USED

7

IDENTIFICATION STAMP
DIV. OF THE STATE ARCHITECT
APP: 03-124589 INC:
REVIEWED FOR
SS ☑ FLS ☑ ACS ☑
DATE: 04/15/2025

AMS®
American Modular Systems
787 Spreckels Ave., Manteca, CA 95336
Phone (209) 825-1921 Fax (209) 825-7018
www.americanmodular.com

INTELLECTUAL-PROPERTY & PROPRIETARY RIGHTS STATEMENT
COPYRIGHT © AMERICAN MODULAR SYSTEMS (AMS)
AMS OWNS ALL COPYRIGHT AND OTHER INTELLECTUAL-PROPERTY AND PROPRIETARY RIGHTS IN THESE DRAWINGS, SPECIFICATIONS, AND THE MATERIAL CONTAINED HEREIN. CERTAIN ELEMENTS SHOWN IN THESE DOCUMENTS ARE REGISTERED TRADEMARKS OF AMS. ALL PATENTABLE MATERIALS CONTAINED IN THESE DOCUMENTS AND ORIGINATING WITH AMS WILL REMAIN THE SOLE PROPERTY OF AMS. THESE DRAWING, SPECIFICATIONS, AND THE MATERIAL CONTAINED HEREIN MAY NOT BE REPRODUCED, TRANSMITTED, COPIED, DISTRIBUTED, MODIFIED, OR OTHERWISE DISPOSED OF (DIRECTLY OR INDIRECTLY) AND MAY NOT BE USED (IN WHOLE OR IN PART) TO ASSIST IN THE CONSTRUCTION, DESIGN, OR OTHER MAKING OF, OR FOR THE PURPOSE OF FURNISHING ANY INFORMATION FOR THE CONSTRUCTION, DESIGN, OR OTHER MAKING OF, ANY BUILDINGS (MODULAR OR OTHERWISE), DRAWINGS, SPECIFICATIONS, PRINTS, APPARATUS, OR PARTS THEREOF, EXCEPT AS EXPRESSLY PERMITTED BY WRITTEN CONSENT OF, OR IN A WRITTEN AGREEMENT WITH, AMS. SUBMITTAL OR DISTRIBUTION TO MEET OFFICIAL REGULATORY REQUIREMENTS WILL NOT BE CONSTRUED AS PUBLICATION IN DEROGATION OF AMS'S COPYRIGHT OR OTHER INTELLECTUAL-PROPERTY OR PROPRIETARY RIGHTS.

PRE-CHECKED SET NAME
72' x 40' BUILDING
STANDARD MODULAR BUILDING
(HIGH SEISMIC)
FORM®

SITE SPECIFIC PROJECT NAME
VENTURA COLLEGE
(1) 72'x40' BUILDING

MANUFACTURER PROFESSIONAL OF RECORD
LICENSED ARCHITECT PATRICK CONNELLY No. C12631 Ren. 3-31-25 STATE OF CALIFORNIA
REGISTERED PROFESSIONAL ENGINEER MARK D. FINNEY No. S3380 Exp. 03/31/26 STRUCTURAL STATE OF CALIFORNIA
RST#24149
12/30/2024

REVISIONS
1
2
3
4

DRAWN BY:	AA
SCALE:	AS NOTED
DATE:	12/16/24
PROJECT NO:	1895-24

SHEET TITLE:
CONCRETE FOUNDATION DETAILS

SHEET NUMBER:
S1.5-M

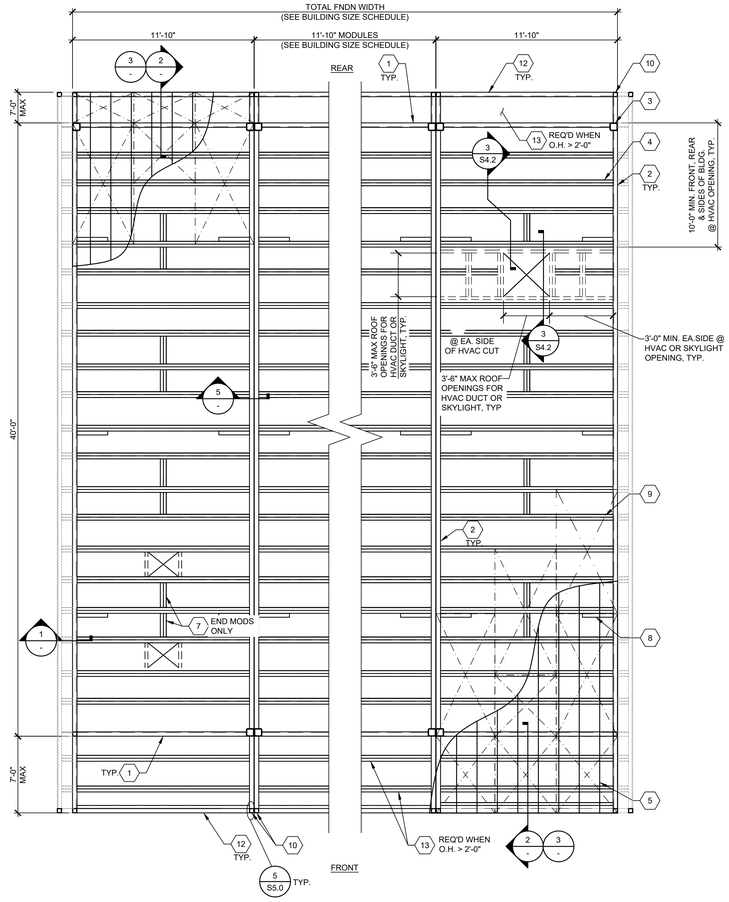

TYPICAL ROOF FRAMING LAYOUT (ENCLOSED SOFFIT) SCALE: 1/4"=1'-0" A

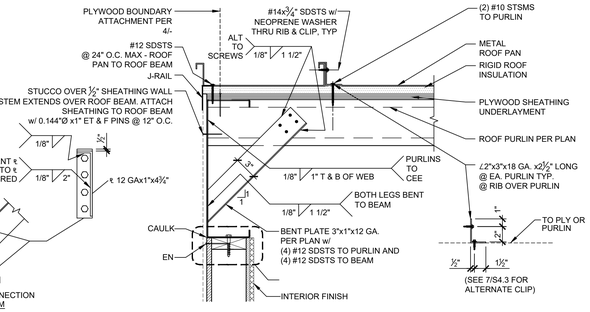

SIDE WALL TO ROOF BEAM DETAIL SCALE: 1 1/2"=1'-0" 1

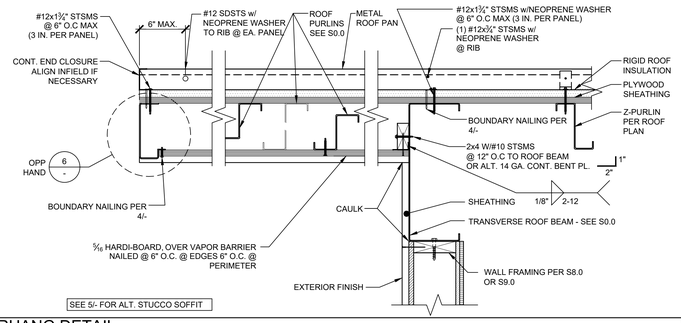

OVERHANG DETAIL SCALE: 1 1/2"=1'-0" 2

1. TRANSVERSE ROOF BEAM PER SHEET S0.0.
2. LONGITUDINAL ROOF BEAM PER SHEET S0.0.
3. HSS COLUMN PER SHEET S5.0.
4. ROOF PURLINS @ 24" O.C. MAX.
   -SEE SHEET S0.0
   (USE 'C' PURLINS @ OPT. SOLUTUBE SKYLIGHT OPENINGS PER 14 BELOW)
5. 20 GA. OR 22 GA. METAL ROOF PAN - SEE SHEET S0.0.
6. NOT USED
7. NOT USED
8. NOT USED
9. 15/32" APA RATED PLYWOOD OR OSB ROOF SHEATHING, C-D EXPOSURE 1, 32/16 SPAN RATING. PLYWOOD SHALL BE 5 PLY CONFORMING TO PS 1-19 OR PS 2-19. OSB SHEATHING SHALL CONFORM TO PRP-108 OR PS 2-19. ALL PLYWOOD OR OSB SHALL BE EITHER T&G OR EDGE CLIPPED AT UNSUPPORTED EDGES. STAGGER SHEETS 48" O.C. AS SHOWN w/ FACE GRAIN PERPENDICULAR TO ROOF PURLINS, 2 SPANS MIN., 24" MIN. WIDTH. ALL BOUNDARY, EDGE & FIELD ATTACHMENTS SHALL BE 3/8" MIN. FROM EDGE OF OSB OR PLYWOOD & EDGE OF STEEL SUPPORTING MEMBER. REFER TO FASTENING SCHEDULE 4/- FOR FASTENING.
10. 2½" SQ. HSS SOFFIT COLUMN - SEE 5/S5.0.
11. SOFFIT OUTRIGGER BEAM - SEE S0.0
12. SOFFIT BEAM - SEE S0.0
13. ROOF PURLINS @ 24" O.C. MAX IN OVERHANGS - SEE S0.0.
    MAY BE ACHIEVED WITH FULL DEPTH PURLINS SUPPORTING ROOF SHEATHING & SOFFIT SHEATHING OR BY SEPARATE SMALLER JOISTS @ EACH LEVEL MAINTAINING MAX SPACING AT EACH LEVEL

11. NOT USED
12. SOFFIT BEAM - SEE S0.0

KEY NOTES

1. THE MATERIAL THICKNESS OF LIGHT GAUGE STRUCTURAL MEMBERS, IN THEIR END-USE, SHALL MEET OR EXCEED THE MINIMUM BASE METAL THICKNESS SPECIFIED ON SHEET S0.0. THE MATERIAL GAGE DESIGNATION IN THE PLAN SHALL BE USED AS REFERENCE ONLY.
2. SEE SHEET S8.0 & S9.0 FOR TYP. SIDE WALL FRAMING.
3. SEE SHEET S8.0 & S9.0 FOR TYP. END WALL FRAMING.
4. ALL FASTENERS THRU METAL ROOF PANEL SHALL BE INSTALLED w/ NEOPRENE WASHERS.
5. FOR PLASTER STUCCO FINISH @ SOFFIT, LATH SHALL BE SECURED PER THE FOLLOWING (CBC 2507.3):
   SECURE LATH TO ALTERNATE SUPPORTS WITH TIES CONSISTING OF A DOUBLE STRAND OF NO. 18 W & M GAGE GALVANIZED ANNEALED WIRE AT ONE EDGE OF EACH SHEET OF LATH. WIRE TIES SHALL BE INSTALLED NOT LESS THAN 3 INCHES (76MM) BACK FROM THE EDGE OF EACH SHEET AND SHALL BE LOOPED AROUND STRIPPING, OR ATTACHED TO A #8 SMS SCREW INTO EACH SIDE OF THE PURLIN - 2 INCHES (51MM) ABOVE THE BOTTOM OF THE PURLIN OR TO EACH END OF A #12 SMS DRIVEN HORIZONTALLY THROUGH THE PURLIN - 2 INCHES (51MM) ABOVE THE BOTTOM OF THE PURLIN AND THE ENDS OF THE WIRE SECURED TOGETHER WITH THREE TWISTS OF WIRE.
6. REFER TO MINIMUM INSULATION SCHEDULES ON SHEET M1.7 FOR ALL INSULATION REQUIREMENTS.

BUILDING SIZE SCHEDULE				
BUILDING SIZE (FT)	TOTAL # OF 12'-0" WIDE MODULES	TOTAL # OF CENTER MODULES	OVERALL BUILDING WIDTH[1]	
24'x40'	2	0	23'-8½"	
36'x40'	3	1	35'-6¾"	
48'x40'	4	2	47'-5"	
60'x40'	5	3	59'-3¼"	
72'x40'	6	4	71'-1½"	☒
84'x40'	7	5	82'-11¾"	
96'x40'	8	6	94'-10"	
108'x40'	9	7	106'-8¼"	
120'x40'	10	8	118'-6½"	

NOTES:

1. TOTAL BUILDING WIDTH INCLUDES 1/4" PER MODULAR CONSTRUCTION TOLERANCE PER FOUNDATION SHEETS S1.0, S1.1, S1.2, & S1.3.

BUILDING SIZE SCHEDULE

SHEATHING FASTENING SCHEDULE		
FASTENING	0.144"Ø ET&F PINS SPACING	#10 OR #12 SDSTS SPACING
BOUNDARY	6" O.C.	6" O.C.
EDGE	6" O.C.	6" O.C.
FIELD	12" O.C.	12" O.C.

NOTE: ET&F PINS PER IAPMO REPORT UES ER-0335. SDSTS PER ASTM C1513.

FASTENING SPACING SCHEDULE 4

NOT USED 3

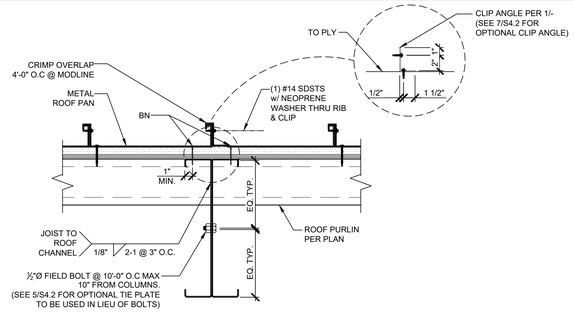

ROOF BEAM CONNECTION DETAIL SCALE: 1 1/2"=1'-0" 5

GENERAL NOTES

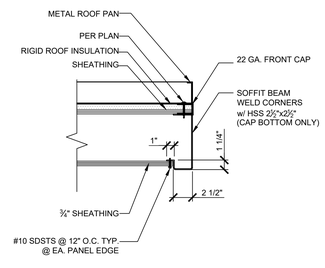

ENCLOSED SOFFIT DETAIL SCALE: 1 1/2"=1'-0" 6

IDENTIFICATION STAMP
DIV. OF THE STATE ARCHITECT
APP: 03-124589 INC:
REVIEWED FOR
SS ☑ FLS ☑ ACS ☑
DATE: 04/15/2025

AMS®
American Modular Systems
787 Spreckels Ave., Manteca, CA 95336
Phone (209) 825-1921 Fax (209) 825-7018
www.americanmodular.com

INTELLECTUAL-PROPERTY & PROPRIETARY RIGHTS STATEMENT
COPYRIGHT © AMERICAN MODULAR SYSTEMS (AMS)
AMS OWNS ALL COPYRIGHT AND OTHER INTELLECTUAL-PROPERTY AND PROPRIETARY RIGHTS IN THESE DRAWINGS, SPECIFICATIONS, AND THE MATERIAL CONTAINED HEREIN. CERTAIN ELEMENTS SHOWN IN THESE DOCUMENTS ARE REGISTERED TRADEMARKS OF AMS. ALL PATENTABLE MATERIALS CONTAINED IN THESE DOCUMENTS AND ORIGINATING WITH AMS WILL REMAIN THE SOLE PROPERTY OF AMS. THESE DRAWING, SPECIFICATIONS, AND THE MATERIAL CONTAINED HEREIN MAY NOT BE REPRODUCED, TRANSMITTED, COPIED, DISTRIBUTED, MODIFIED, OR OTHERWISE DISPOSED OF (DIRECTLY OR INDIRECTLY) AND MAY NOT BE USED (IN WHOLE OR IN PART) TO ASSIST IN THE CONSTRUCTION, DESIGN, OR OTHER MAKING OF, OR FOR THE PURPOSE OF FURNISHING ANY INFORMATION FOR THE CONSTRUCTION, DESIGN, OR OTHER MAKING OF, ANY BUILDINGS (MODULAR OR OTHERWISE), DRAWINGS, SPECIFICATIONS, PRINTS, APPARATUS, OR PARTS THEREOF, EXCEPT AS EXPRESSLY PERMITTED BY WRITTEN CONSENT OF, OR IN A WRITTEN AGREEMENT WITH, AMS. SUBMITTAL OR DISTRIBUTION TO MEET OFFICIAL REGULATORY REQUIREMENTS WILL NOT BE CONSTRUED AS PUBLICATION IN DEROGATION OF AMS'S COPYRIGHT OR OTHER INTELLECTUAL-PROPERTY OR PROPRIETARY RIGHTS.

PRE-CHECKED SET NAME
72' x 40' BUILDING
STANDARD MODULAR BUILDING
(HIGH SEISMIC)
FORM®

SITE SPECIFIC PROJECT NAME
VENTURA COLLEGE
(1) 72'x40' BUILDING

MANUFACTURER PROFESSIONAL OF RECORD
LICENSED ARCHITECT PATRICK CONNELLY No. C12631 Ren. 3-31-25 STATE OF CALIFORNIA
LICENSED PROFESSIONAL ENGINEER MANUEL D. FIGUEROA No. S3380 Exp. 03/31/26 STRUCTURAL STATE OF CALIFORNIA
RST#24149
03/07/2025

REVISIONS
1
2
3
4

DRAWN BY:	AA
SCALE:	AS NOTED
DATE:	03/05/25
PROJECT NO:	1895-24

SHEET TITLE:
ROOF FRAMING PLAN
& DETAILS
ROOF SHEATHING OPTION

SHEET NUMBER:
S4.1-M

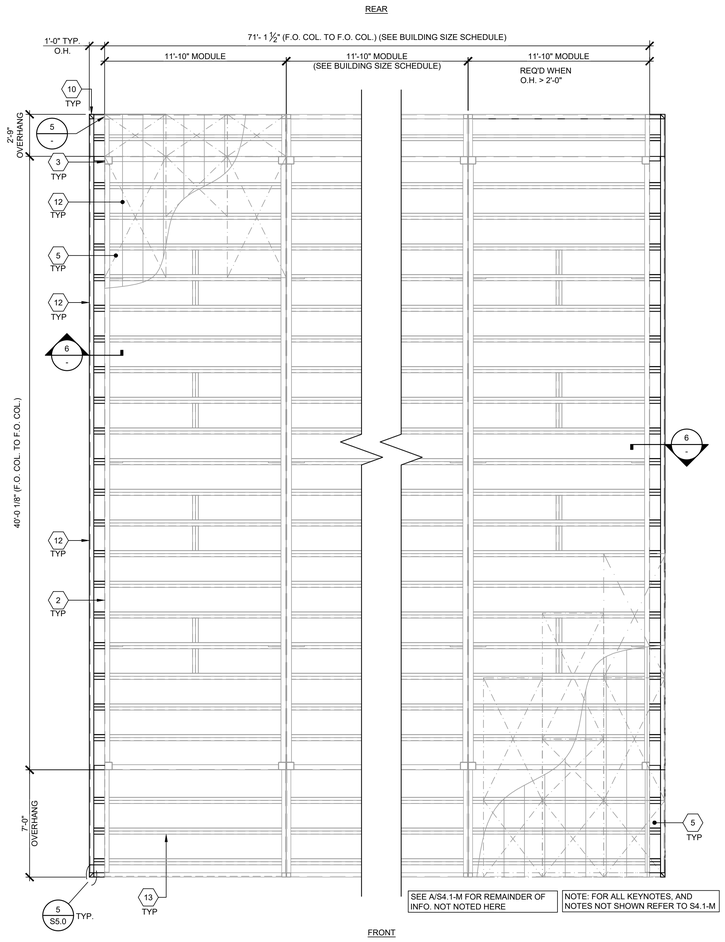

TYPICAL ROOF FRAMING LAYOUT

SCALE: 1/4"=1'-0" 3A

1. NOT USED
2. LONGITUDINAL ROOF BEAM PER SHEET S0.0.
3. HSS COLUMN PER SHEET S5.0.
4. ROOF PURLINS @ 24" O.C. MAX.
   -SEE SHEET S0.0
   ~~(USE 'C' PURLINS @ OPT. SOLUTUBE SKYLIGHT OPENINGS PER (X) BELOW)~~
5. 20 GA. OR 22 GA. METAL ROOF PAN - SEE SHEET S0.0.
6. NOT USED
7. NOT USED
8. NOT USED
9. 15/32" APA RATED PLYWOOD OR OSB ROOF SHEATHING, C-D EXPOSURE 1, 32/16 SPAN RATING. PLYWOOD SHALL BE 5 PLY CONFORMING TO PS 1-19 OR PS 2-19. OSB SHEATHING SHALL CONFORM TO PRP-108 OR PS 2-19. ALL PLYWOOD OR OSB SHALL BE EITHER T&G OR EDGE CLIPPED AT UNSUPPORTED EDGES. STAGGER SHEETS 48" O.C. AS SHOWN w/ FACE GRAIN PERPENDICULAR TO ROOF PURLINS, 2 SPANS MIN., 24" MIN. WIDTH. ALL BOUNDARY, EDGE & FIELD ATTACHMENTS SHALL BE 3/8" MIN. FROM EDGE OF OSB OR PLYWOOD & EDGE OF STEEL SUPPORTING MEMBER. REFER TO FASTENING SCHEDULE 4/- FOR FASTENING.
10. 2½" SQ. HSS SOFFIT COLUMN - SEE 5/S5.0.
11. SOFFIT OUTRIGGER BEAM - SEE 8/S0.0
12. SOFFIT BEAM - SEE 3/S0.0
13. ROOF PURLINS @ 24" O.C. MAX IN OVERHANGS - SEE S0.0. MAY BE ACHIEVED WITH FULL DEPTH PURLINS SUPPORTING ROOF SHEATHING & SOFFIT SHEATHING OR BY SEPARATE SMALLER JOISTS @ EACH LEVEL MAINTAINING MAX SPACING AT EACH LEVEL

KEY NOTES

1. THE MATERIAL THICKNESS OF LIGHT GAUGE STRUCTURAL MEMBERS, IN THEIR END-USE, SHALL MEET OR EXCEED THE MINIMUM BASE METAL THICKNESS SPECIFIED ON SHEET S0.0. THE MATERIAL GAGE DESIGNATION IN THE PLAN SHALL BE USED AS REFERENCE ONLY.
2. SEE SHEET S8.0 ~~& S9.0~~ FOR TYP. SIDE WALL FRAMING.
3. SEE SHEET S8.0 ~~& S9.0~~ FOR TYP. END WALL FRAMING.
4. ALL FASTENERS THRU METAL ROOF PANEL SHALL BE INSTALLED w/ NEOPRENE WASHERS.
5. REFER TO MINIMUM INSULATION SCHEDULES ON SHEET M1.7 FOR ALL INSULATION REQUIREMENTS.

GENERAL NOTES

BUILDING SIZE SCHEDULE			
BUILDING SIZE (FT)	TOTAL # OF 12'-0" WIDE MODULES	TOTAL # OF CENTER MODULES	OVERALL BUILDING WIDTH[1]
☐ 24'x40'	2	0	23'-8½"
☐ 36'x40'	3	1	35'-6¾"
☐ 48'x40'	4	2	47'-5"
☐ 60'x40'	5	3	59'-3¼"
☒ 72'x40'	6	4	71'-1½"
☐ 84'x40'	7	5	82'-11¾"
☐ 96'x40'	8	6	94'-10"
☐ 108'x40'	9	7	106'-8¼"
☐ 120'x40'	10	8	118'-6½"

NOTES:

1. TOTAL BUILDING WIDTH INCLUDES 1/4" PER MODULAR CONSTRUCTION TOLERANCE PER FOUNDATION SHEET S1.1

BUILDING SIZE SCHEDULE

SEE A/S4.1-M FOR REMAINDER OF INFO. NOT NOTED HERE

NOTE: FOR ALL KEYNOTES, AND NOTES NOT SHOWN REFER TO A/S4.1-M

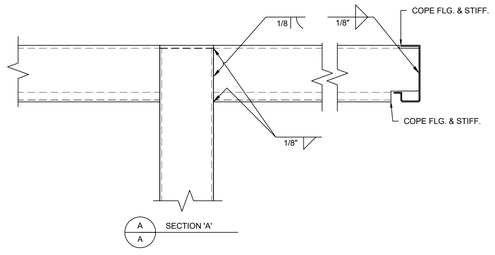

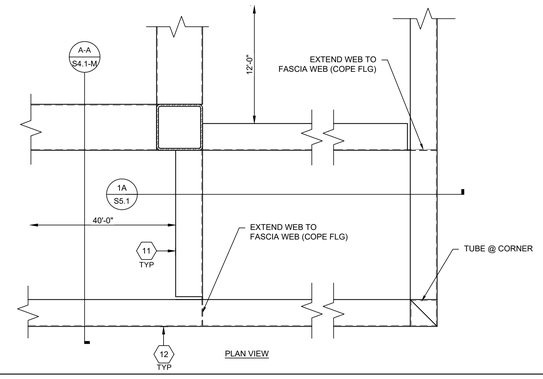

TYPICAL ROOF BEAM TO HSS DETAIL

5

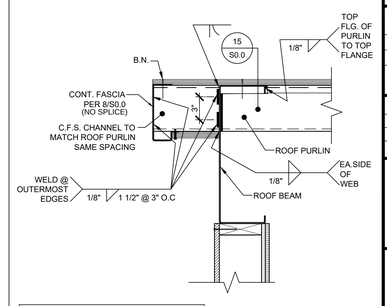

NOTE:
REFER TO DETAIL 1/S4.1 FOR REMAINDER OF INFORMATION NOT NOTED.

SCALE: 1 1/2"=1'-0"

SIDE WALL OVERHANG DETAIL

6

IDENTIFICATION STAMP
DIV. OF THE STATE ARCHITECT
APP: 03-124589 INC:
REVIEWED FOR
SS ☑ FLS ☑ ACS ☑
DATE: 04/15/2025

AMS®
American Modular Systems
787 Spreckels Ave., Manteca, CA 95336
Phone (209) 825-1921 Fax (209) 825-7018
www.americanmodular.com

INTELLECTUAL-PROPERTY & PROPRIETARY RIGHTS STATEMENT
COPYRIGHT © AMERICAN MODULAR SYSTEMS (AMS)
AMS OWNS ALL COPYRIGHT AND OTHER INTELLECTUAL-PROPERTY AND PROPRIETARY RIGHTS IN THESE DRAWINGS, SPECIFICATIONS, AND THE MATERIAL CONTAINED HEREIN. CERTAIN ELEMENTS SHOWN IN THESE DOCUMENTS ARE REGISTERED TRADEMARKS OF AMS. ALL PATENTABLE MATERIALS CONTAINED IN THESE DOCUMENTS AND ORIGINATING WITH AMS WILL REMAIN THE SOLE PROPERTY OF AMS. THESE DRAWINGS, SPECIFICATIONS, AND THE MATERIAL CONTAINED HEREIN MAY NOT BE REPRODUCED, TRANSMITTED, COPIED, DISTRIBUTED, MODIFIED, OR OTHERWISE DISPOSED OF (DIRECTLY OR INDIRECTLY) AND MAY NOT BE USED (IN WHOLE OR IN PART) TO ASSIST IN THE CONSTRUCTION, DESIGN, OR OTHER MAKING OF, OR FOR THE PURPOSE OF FURNISHING ANY INFORMATION FOR THE CONSTRUCTION, DESIGN, OR OTHER MAKING OF, ANY BUILDINGS (MODULAR OR OTHERWISE), DRAWINGS, SPECIFICATIONS, PRINTS, APPARATUS, OR PARTS THEREOF, EXCEPT AS EXPRESSLY PERMITTED BY WRITTEN CONSENT OF, OR IN A WRITTEN AGREEMENT WITH, AMS. SUBMITTAL OR DISTRIBUTION TO MEET OFFICIAL REGULATORY REQUIREMENTS WILL NOT BE CONSTRUED AS PUBLICATION IN DEROGATION OF AMS'S COPYRIGHT OR OTHER INTELLECTUAL-PROPERTY OR PROPRIETARY RIGHTS.

PRE-CHECKED SET NAME

72' x 40' BUILDING
STANDARD MODULAR BUILDING
(HIGH SEISMIC)

FORM®

SITE SPECIFIC PROJECT NAME

VENTURA COLLEGE
(1) 72'x40' BUILDING

MANUFACTURER PROFESSIONAL OF RECORD

LICENSED ARCHITECT PATRICK CARNEY No. C12631 Ren. 3-31-25 STATE OF CALIFORNIA

REGISTERED PROFESSIONAL ENGINEER Manoj P. Patel No. S3380 Exp. 03/31/26 STRUCTURAL STATE OF CALIFORNIA

RST#24149
03/07/2025

REVISIONS
1
2
3
4

DRAWN BY:	AA
SCALE:	AS NOTED
DATE:	03/05/25
PROJECT NO:	1895-24

SHEET TITLE:

ROOF FRAMING PLAN & DETAILS

SHEET NUMBER:

S4.1A-M

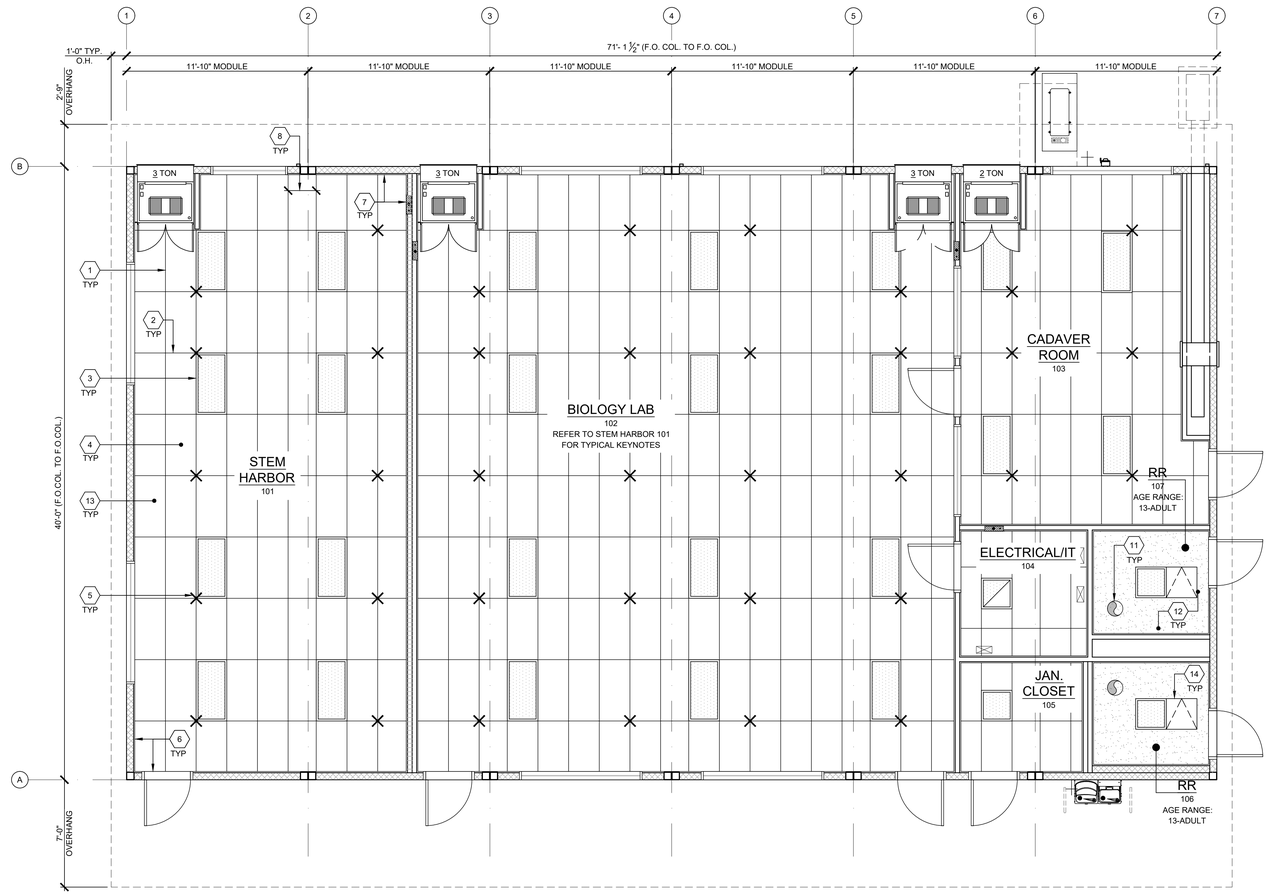

TYPICAL REFLECTED CEILING PLAN

SCALE: 1/4" = 1'-0" | 1

1. MAIN TEE RUNNER TYP. PER TABLE A, SHEET M1.7
2. CROSS TEE RUNNER TYP. PER TABLE A, SHEET M1.7
3. INTERIOR LIGHT FIXTURE, REFER TO SHEET SHEET E1.0 FOR SPEC'S ATTACHMENT PER DETAIL 7/M1.4
4. CEILING HEIGHT @ 9'-0" MIN.
5. STRUT/SPLAY WIRE ASSEMBLY, SEE 2/M1.4 FOR DETAILS
6. FIXED CEILING END, SEE DETAIL 5A/M1.4 OR 4/- AS REQUIRED
7. FREE CEILING END, SEE DETAIL 5B/M1.4 OR 4/- AS REQUIRED
8. CENTER SECTION THAT CROSSES MODULE LINE TO BE FIELD INSTALLED, SEE DETAIL 5C/M1.4
9. TYP. HVAC UNIT
10. NOT USED
11. EXHAUST FAN - SEE M1.1
12. HARD LID CEILING TYP (CEILING HEIGHT 9'-0")
13. T-BAR SUSPENDED CEILING TYP.
14. ATTIC ACCESS (LOCATION MAY VARY)

KEY NOTES

1. WHERE TWO OR MORE HVAC UNITS SERVE A COMMON SPACE, UNITS SHALL BE EQUIPPED WITH A DUCT SMOKE DETECTOR FOR AUTO SHUTDOWN. INTERCONNECT WITH FIRE ALARM SYSTEM.
2. AUTOMATIC SHUT-OFF IS NOT REQUIRED WHEN ALL OCCUPIED ROOMS SERVED BY THE AIR HANDLING EQUIPMENT HAVE DIRECT ACCESS TO THE EXTERIOR AND THE TRAVEL DISTANCE DOES NOT EXCEED 100 FT. PER C.M.C. 608.1 EXCEPTION #2.
3. LIGHT FIXTURES MAY BE INSTALLED ROTATED 90° FROM SHOWN TO MATCH T-GRID.
4. PC TITLE 24 HAS BEEN RUN FOR WORSE CASE OUTDOOR VENTILATION REQUIREMENTS (SEE OUTDOOR VENTILATION ON SHEET N2.0 FOR OUR OUTDOOR VENTILATION DESIGN REQUIREMENT NOTES)
5. ACCEPTANCE TESTING PER ENERGY CODE SECTION 10-103
6. ACCEPTANCE TESTS TO BE COMPLETED ON NEWLY INSTALLED OR REPLACEMENT OF MECHANICAL SYSTEMS BEFORE PROJECT COMPLETION PER THE CALIFORNIA ENERGY CODE SECTION 10-103. ACCEPTANCE TESTS MUST BE PERFORMED BY A CERTIFIED ACCEPTANCE TEST TECHNICIAN (ATT). THE ACCEPTANCE TESTING PROCEDURES MUST BE REPEATED, AND DEFICIENCIES CORRECTED UNTIL THE INSTALLATION OF THE SPECIFIED SYSTEMS CONFORM AND PASS THE REQUIRED ACCEPTANCE CRITERIA. COMPLETED NRCA FORMS SHALL BE SUBMITTED TO THE PROJECT INSPECTOR AND THE DISTRICT.

GENERAL NOTES

MEP COMPONENT ANCHORAGE NOTES

ALL MECHANICAL, PLUMBING, AND ELECTRICAL COMPONENTS SHALL BE ANCHORED AND INSTALLED PER THE DETAILS ON THE DSA APPROVED CONSTRUCTION DOCUMENTS. THE FOLLOWING COMPONENTS SHALL BE ANCHORED OR BRACED TO MEET THE FORCE AND DISPLACEMENT REQUIREMENTS PRESCRIBED IN THE 2022 CBC, SECTIONS 1617A.1.18 THROUGH 1617A.1.26 AND ASCE 7-16 CHAPTER 13, 26 AND 30.

1. ALL PERMANENT EQUIPMENT AND COMPONENTS.
2. TEMPORARY, MOVABLE OR MOBILE EQUIPMENT THAT IS PERMANENTLY ATTACHED (E.G. HARD WIRED) TO THE BUILDING UTILITY SERVICES SUCH AS ELECTRICITY, GAS OR WATER. "PERMANENTLY ATTACHED" SHALL INCLUDE ALL ELECTRICAL CONNECTIONS EXCEPT PLUGS FOR110/220 VOLT RECEPTACLES HAVING A FLEXBLE CABLE.
3. TEMPORARY, MOVABLE OR MOBILE EQUIPMENT WHICH IS HEAVIER THAN 400 POUNDS OR HAS A CENTER OF MASS LOCATED 4 FEET OR MORE ABOVE THE ADJACENT FLOOR OR ROOF LEVEL THAT DIRECTLY SUPPORT THE COMPONENT IS REQUIRED TO BE RESTRAINED IN A MANNER APPROVED BY DSA.

THE FOLLOWING MECHANICAL AND ELECTRICAL COMPONENTS SHALL BE POSITIVELY ATTACHED TO THE STRUCTURE BUT NEED NOT DEMONSTRATE DESIGN COMPLIANCE WITH THE REFERENCE NOTED ABOVE. THESE COMPONENTS SHALL HAVE FLEXIBLE CONNECTIONS PROVIDED BETWEEN THE COMPONENT AND ASSOCIATED DUCTWORK, PIPING, AND CONDUIT. FLEXIBLE CONNECTIONS MUST ALLOW MOVEMENT IN BOTH TRANSVERSE AND LONGITUDINAL DIRECTIONS:

A. COMPONENTS WEIGHING LESS THAN 400 POUNDS AND HAVE A CENTER OF MASS LOCATED 4 FEET OR LESS ABOVE THE ADJACENT FLOOR OR ROOF LEVEL THAT DIRECTLY SUPPORT THE COMPONENT.
B. COMPONENTS WEIGHING LESS THAN 20 POUNDS, OR IN THE CASE OF DISTRIBUTED SYSTEMS, LESS THAN 5 POUNDS PER FOOT, WHICH ARE SUSPENDED FROM A ROOF OR FLOOR OR HUNG FROM A WALL.

THE ANCHORAGE OF ALL MECHANICAL, ELECTRICAL AND PLUMBING COMPONENTS SHALL BE SUBJECT TO THE APPROVAL OF THE DESIGN PROFESSIONAL IN GENERAL RESPONSIBLE CHARGE OR STRUCTURAL ENGINEER DELEGATED RESPONSIBILITY AND ACCEPTANCE BY DSA. THE PROJECT INSPECTOR WILL VERIFY THAT ALL COMPONENTS AND EQUIPMENT HAVE BEEN ANCHORED IN ACCORDANCE WITH THE ABOVE REQUIREMENTS.

PIPING, DUCTWORK, AND ELECTRICAL DISTRIBUTION SYSTEM BRACING NOTES

PIPING, DUCTWORK, AND ELECTRICAL DISTRIBUTION SYSTEMS SHALL BE BRACED TO COMPLY WITH THE FORCES AND DISPLACEMENTS PRESCRIBED IN ASCE 7-16 SECTION 13.3 AS DEFINED IN ASCE 7-16 SECTION 13.6.5, 13.6.6, 13.6.7, 13.6.8; AND 2022 CBC, SECTIONS 1617A.1.24, 1617A.1.25 AND 1617A.1.26.

THE METHOD OF SHOWING BRACING AND ATTACHMENTS TO THE STRUCTURE FOR THE IDENTIFIED DISTRIBUTION SYSTEM ARE AS NOTED BELOW. WHEN BRACING AND ATTACHMENTS ARE BASED ON A PRE-APPROVED INSTALLATION GUIDE (E.G., OSHPD OPM FOR 2013 CBC OR LATER), COPIES OF THE BRACING SYSTEM INSTALLATION GUIDE OR MANUAL SHALL BE AVAILABLE ON THE JOBSITE PRIOR TO THE START OF AND DURING THE HANGING AND BRACING OF THE DISTRIBUTION SYSTEMS. THE STRUCTURAL ENGINEER OF RECORD SHALL VERIFY THE ADEQUACY OF THE STRUCTURE TO SUPPORT THE HANGER AND BRACE LOADS.

MECHANICAL PIPING (MP), MECHANICAL DUCTS (MD), PLUMBING PIPING (PP), ELECTRICAL DISTRIBUTION SYSTEMS (E):

MP☒ MD☒ PP☒ E☒ OPTION 1: DETAILED ON THE APPROVED DRAWINGS WITH PROJECT SPECIFIC NOTES AND DETAILS.

MP☐ MD☐ PP☐ E☐ OPTION 2: SHALL COMPLY WITH THE APPLICABLE OSHPD PRE-APPROVAL (OPM #) #_____.

NOT USED | 2

NOT USED | 3

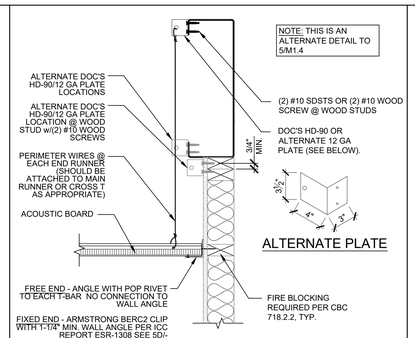

SUSPENDED CEILING ATTACHMENT DETAIL | 4

BUILDING SIZE SCHEDULE

BUILDING SIZE (FT)	TOTAL # OF 12'-0" WIDE MODULES	TOTAL # OF CENTER MODULES	OVERALL BUILDING WIDTH[1]
☐ 24'x40'	2	0	23'-8½"
☐ 36'x40'	3	1	35'-6¾"
☐ 48'x40'	4	2	47'-5"
☐ 60'x40'	5	3	59'-3¼"
☒ 72'x40'	6	4	71'-1½"
☐ 84'x40'	7	5	82'-11¾"
☐ 96'x40'	8	6	94'-10"
☐ 108'x40'	9	7	106'-8¼"
☐ 120'x40'	10	8	118'-6½"

NOTES:

1. TOTAL BUILDING WIDTH INCLUDES ¼" PER MODULE CONSTRUCTION TOLERANCE PER FOUNDATION SHEET S1.1

BUILDING SIZE SCHEDULE

MEP COMPONENT ANCHORAGE NOTES

IDENTIFICATION STAMP
DIV. OF THE STATE ARCHITECT
APP: 03-124589 INC:
REVIEWED FOR
SS ☑ FLS ☑ ACS ☑
DATE: 04/15/2025

AMS®
American Modular Systems
787 Spreckels Ave., Manteca, CA 95336
Phone (209) 825-1921 Fax (209) 825-7018
www.americanmodular.com

INTELLECTUAL-PROPERTY & PROPRIETARY RIGHTS STATEMENT
COPYRIGHT © AMERICAN MODULAR SYSTEMS (AMS)
AMS OWNS ALL COPYRIGHT AND OTHER INTELLECTUAL-PROPERTY AND PROPRIETARY RIGHTS IN THESE DRAWINGS, SPECIFICATIONS, AND THE MATERIAL CONTAINED HEREIN. CERTAIN ELEMENTS SHOWN IN THESE DOCUMENTS ARE REGISTERED TRADEMARKS OF AMS. ALL PATENTABLE MATERIALS CONTAINED IN THESE DOCUMENTS AND ORIGINATING WITH AMS WILL REMAIN THE SOLE PROPERTY OF AMS. THESE DRAWINGS, SPECIFICATIONS, AND THE MATERIAL CONTAINED HEREIN MAY NOT BE REPRODUCED, TRANSMITTED, COPIED, DISTRIBUTED, MODIFIED, OR OTHERWISE DISPOSED OF (DIRECTLY OR INDIRECTLY) AND MAY NOT BE USED (IN WHOLE OR IN PART) TO ASSIST IN THE CONSTRUCTION, DESIGN, OR OTHER MAKING OF, OR FOR THE PURPOSE OF FURNISHING ANY INFORMATION FOR THE CONSTRUCTION, DESIGN, OR OTHER MAKING OF, ANY BUILDINGS (MODULAR OR OTHERWISE), DRAWINGS, SPECIFICATIONS, PRINTS, APPARATUS, OR PARTS THEREOF, EXCEPT AS EXPRESSLY PERMITTED BY WRITTEN CONSENT OF, OR IN A WRITTEN AGREEMENT WITH, AMS. SUBMITTAL OR DISTRIBUTION TO MEET OFFICIAL REGULATORY REQUIREMENTS WILL NOT BE CONSTRUED AS PUBLICATION IN DEROGATION OF AMS'S COPYRIGHT OR OTHER INTELLECTUAL-PROPERTY OR PROPRIETARY RIGHTS.

PRE-CHECKED SET NAME

72' x 40' BUILDING
STANDARD MODULAR BUILDING
(HIGH SEISMIC)

FORM®

SITE SPECIFIC PROJECT NAME

VENTURA COLLEGE
(1) 72'x40' BUILDING

MANUFACTURER PROFESSIONAL OF RECORD

LICENSED ARCHITECT
PATRICK CRAWFORD
No. C12631
Ren. 3-31-25
STATE OF CALIFORNIA

REVISIONS
1
2
3
4

DRAWN BY:	AA
SCALE:	AS NOTED
DATE:	03/05/25
PROJECT NO:	1895-24

SHEET TITLE:

TYPICAL
REFLECTED CEILING
PLAN

SHEET NUMBER:

M1.0-M

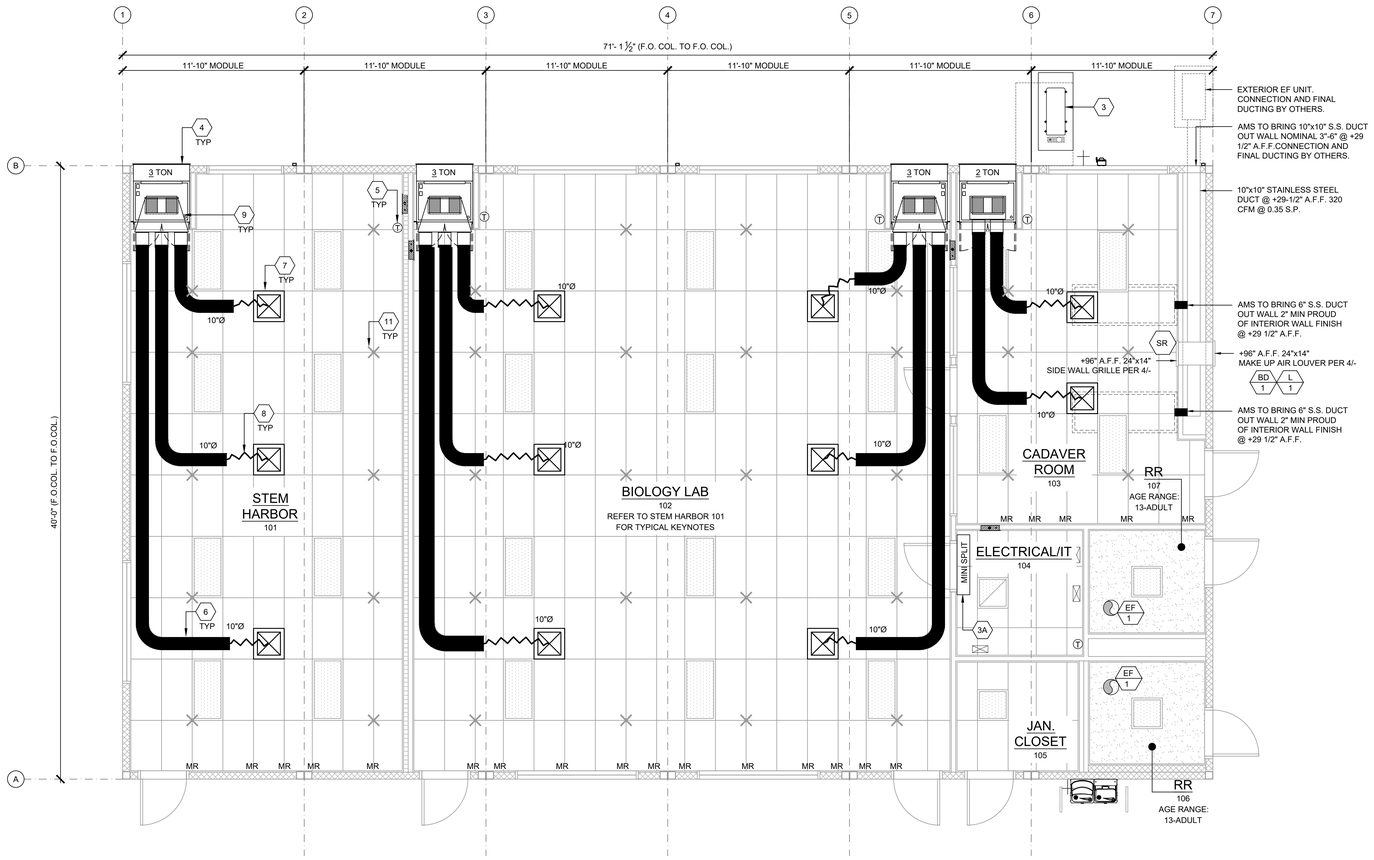

INTERIOR MOUNT - MECHANICAL PLAN

SCALE: 1/4"=1'-0" | 1

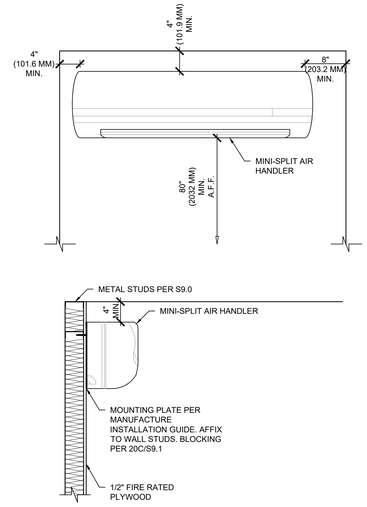

MINI-SPLIT AIR HANDLER DETAIL | 2

	DESCRIPTION	MODEL #	CFM	WEIGHT
CARRIER MINI-SPLIT	3/4 TON INDOOR HIGH WALL AIR UNIT	40MAHBQ09XA3	176/229/335/382	23 LBS
	3/4 TON OUTDOOR CONDENSER UNIT	38MARBQ09AA3	1324	75 LBS

MINI-SPLIT SCHEDULE | 3

SR — SIDE WALL REGISTER TITUS MODEL 300 FL WHITE SURFACE MOUNT. SEE SIZE ON PLANS.

L 1 — LOUVER. RUSKIN MODEL L811S. CUSTOM KYNAR COLOR, INSTALLATION ANGLES, & INSECT SCREEN, OBTAIN COLOR FROM ARCHITECT. SEE MECHANICAL PLAN FOR SIZES.

BD 1 — BACKDRAFT DAMPER, RUSKIN MODE CBD2. CONTERWEIGHT TYPE SET AT 0.05" WC OPEN, INSTALL AT LOUVER

MAKE UP AIR SCHEDULE | 4

MARK	DESCRIPTION	CFM	WATTS	S.P.	VOLT/PH	
EF 1	EXHAUST FAN	110	47.3	.10"	120-1Ø	NUTONE AN110 CEILING MOUNTED 180W INPUT 10 LBS (OR EQUAL)

NOTES:

1. VENT EXHAUST FAN THROUGH ROOF.
2. FANS MUST WEIGH LESS THAN 25 LBS.
3. FOR INSTALLATION DETAILS REFER TO 11 & 16/M1.6

EXHAUST FAN SCHEDULE(S) | 5

1. WHERE TWO OR MORE HVAC UNITS SERVE A COMMON SPACE, UNITS SHALL BE EQUIPPED WITH A DUCT SMOKE DETECTOR FOR AUTOMATIC SHUTDOWN. INTERCONNECT WITH FIRE ALARM SYSTEM.
2. AIR-MOVING SYSTEMS SUPPLYING AIR IN EXCESS OF 2000 CUBIC FEET PER MINUTE TO ENCLOSED SPACES WITHIN THE BUILDING SHALL BE EQUIPPED WITH AN AUTOMATIC SHUTOFF.
3. AUTOMATIC SHUT-OFF IS NOT REQUIRED WHEN OCCUPIED ROOMS SERVED BY THE AIR HANDLING EQUIPMENT HAVE A DIRECT EXIT TO THE EXTERIOR AND THE TRAVEL DISTANCE DOES NOT EXCEED 100 FT. (PER C.M.C. 608.1 EXCEPTION #2.)
4. LIGHTING FIXTURE MAY BE INSTALLED ROTATED 90° FROM SHOWN TO MATCH T-GRID.
5. FOR T-BAR CEILING SPECIFICATIONS, SEE M1.7.
6. PROVIDE CO2 SENSORS AT ALL CLASSROOMS THAT MEET REQUIREMENTS OF CALGREEN 5.506.
6. EACH PUBLIC K-12 SCHOOL CLASSROOM, AS LISTED IN TABLE 120.1-A OF THE CALIFORNIA ENERGY CODE, SHALL BE EQUIPPED WITH A CARBON DIOXIDE MONITOR OR SENSOR THAT MEETS THE FOLLOWING REQUIREMENTS: 1.THE MONITOR OR SENSOR SHALL BE PERMANENTLY AFFIXED IN A TAMPER-PROOF MANNER IN EACH CLASSROOM BETWEEN 3 AND 6 FEET (914 MM AND 1829 MM) ABOVE THE FLOOR AND AT LEAST 5 FEET (1524 MM) AWAY FROM DOORS AND OPERABLE WINDOWS. 2.WHEN THE MONITOR OR SENSOR IS NOT INTEGRAL TO AN ENERGY MANAGEMENT CONTROL SYSTEM (EMCS), THE MONITOR OR SENSOR SHALL DISPLAY THE CARBON DIOXIDE READINGS ON THE DEVICE. WHEN THE SENSOR IS INTEGRAL TO AN EMCS, THE CARBON DIOXIDE READINGS SHALL BE AVAILABLE TO AND REGULARLY MONITORED BY FACILITY PERSONNEL. 3.A MONITOR SHALL PROVIDE NOTIFICATION THROUGH A VISUAL INDICATOR ON THE MONITOR WHEN THE CARBON DIOXIDE LEVELS IN THE CLASSROOM HAVE EXCEEDED 1,100 PPM. A SENSOR INTEGRAL TO AN EMCS SHALL PROVIDE NOTIFICATION TO FACILITY PERSONNEL THROUGH A VISUAL AND/OR AUDIBLE INDICATOR WHEN THE CARBON DIOXIDE LEVELS IN THE CLASSROOM HAVE EXCEEDED 1,100 PPM. 4.THE MONITOR OR SENSOR SHALL MEASURE CARBON DIOXIDE LEVELS AT MINIMUM 15-MINUTE INTERVALS AND SHALL MAINTAIN A RECORD OF PREVIOUS CARBON DIOXIDE MEASUREMENTS OF NOT LESS THAN 30 DAYS DURATION. 5.THE MONITOR OR SENSOR USED TO MEASURE CARBON DIOXIDE LEVELS SHALL HAVE THE CAPACITY TO MEASURE CARBON DIOXIDE LEVELS WITH A RANGE OF 400 PPM TO 2000 PPM OR GREATER. 6.THE MONITOR OR SENSOR SHALL BE CERTIFIED BY THE MANUFACTURER TO BE ACCURATE WITHIN 75 PPM AT 1,000 PPM CARBON DIOXIDE CONCENTRATION AND SHALL BE CERTIFIED BY THE MANUFACTURER TO REQUIRE CALIBRATION NO MORE FREQUENTLY THAN ONCE EVERY 5 YEARS.
7. PER ENERGY CODE 120.1(D): THERMOSTAT SHALL BE PROGRAMMED SO THAT THE AIR HANDLER FAN WILL RUN CONTINUALLY DURING OCCUPIED TIMES. PRE-OCCUPANCY PURGE SHALL BE PROGRAMED ONE HOUR PRIOR TO THE MODULAR BUILDING BEING NORMALLY OCCUPIED. SHOW THERMOSTAT PLACEMENT ON THE PLANS TO BE PLACED AWAY FROM DOORS AND OPERABLE WINDOWS. MECHANICAL PLANS SHOW THERMOSTAT AND SENSOR LOCATIONS, CONTROL DEVICES, AND INCLUDE A CONTROL SEQUENCE OF OPERATIONS. MANUAL OVERRIDE CONTROLS ARE A MANDATORY MEASURE UNDER ENERGY CODE SECTION 120.2(E). ALL HVAC SYSTEMS SHALL HAVE A MANUAL OVERRIDE ACCESSIBLE TO THE OCCUPANTS THAT ALLOWS THEM TO TURN ON THE HVAC SYSTEM DURING NORMALLY UNOCCUPIED TIMES. THIS CAN BE A MANUAL OVERRIDE FOR UP TO 4 HOURS, OCCUPANCY SENSOR OR A 4 HOUR MANUALLY OPERATED TIMER.

SHEET NOTES

1. NOT USED
2. NOT USED
3. CONDENSER - GROUND MOUNT BY OTHERS. (BY OTHERS) PER 34/S012 OF AOR DRAWINGS
3A. AIR HANDLER UNIT - INDOOR HIGH WALL UNIT PER 2/- & 3/-
3B. NOT USED
4. INTERIOR HVAC SYSTEM - SEE 9/M1.4.
5. THERMOSTAT - 48" A.F.F. MAX TO TOP OF BOX
6. CONCEALED SUPPLY AIR DUCT ABOVE T-BAR CEILING - SEE 9/M1.5A.
7. TYPICAL 4-WAY SUPPLY AIR REGISTER LOCATION AND SIZE MAY VARY PER CEILING LAYOUT AND BUILDING SIZE - SEE 7/M1.5.
8. FLEX DUCT - NOMINAL 10" MIN. (MAY VARY) - SEE 8/M1.5.
9. RETURN AIR AS PART OF UNIT.
10. NOT USED
11. STRUT/SPLAY WIRE ASSEMBLY, SEE 5/M1.4 FOR DETAILS

NOTE: FLEXIBLE AIR DUCTS AND CONNECTORS SHALL BE NOT MORE THAN 5 FEET IN LENGTH AND SHALL NOT BE USED IN LIEU OF RIGID ELBOWS OR FITTINGS. FLEXIBLE AIR DUCTS SHALL BE PERMITTED TO BE USED AS AN ELBOW AT A TERMINAL DEVICE PER ENERGY CODE 120.4 AND CMC 603.4.1

KEY NOTES

BUILDING SIZE SCHEDULE			
BUILDING SIZE (FT)	TOTAL # OF 12'-0" WIDE MODULES	TOTAL # OF CENTER MODULES	OVERALL BUILDING WIDTH[1]
☐ 24'x40'	2	0	23'-8½"
☐ 36'x40'	3	1	35'-6¾"
☐ 48'x40'	4	2	47'-5"
☐ 60'x40'	5	3	59'-3¼"
☒ 72'x40'	6	4	71'-1½"
☐ 84'x40'	7	5	82'-11¾"
☐ 96'x40'	8	6	94'-10"
☐ 108'x40'	9	7	106'-8¼"
☐ 120'x40'	10	8	118'-6½"

NOTES:

1. TOTAL BUILDING WIDTH INCLUDES ¼" PER MODULE CONSTRUCTION TOLERANCE PER FOUNDATION SHEET S1.1
2. REFER TO SHEET M1.7 FOR TYPICAL NOTES AND CALL OUTS.

BUILDING SIZE SCHEDULE

IDENTIFICATION STAMP
DIV. OF THE STATE ARCHITECT
APP: 03-124589 INC:
REVIEWED FOR
SS ☑ FLS ☑ ACS ☑
DATE: 04/15/2025

AMS®
American Modular Systems
787 Spreckels Ave., Manteca, CA 95336
Phone (209) 825-1921 Fax (209) 825-7018
www.americanmodular.com

INTELLECTUAL-PROPERTY & PROPRIETARY RIGHTS STATEMENT
COPYRIGHT © AMERICAN MODULAR SYSTEMS (AMS)
AMS OWNS ALL COPYRIGHT AND OTHER INTELLECTUAL PROPERTY AND PROPRIETARY RIGHTS IN THESE DRAWINGS, SPECIFICATIONS, AND THE MATERIAL CONTAINED HEREIN. CERTAIN ELEMENTS SHOWN IN THESE DOCUMENTS ARE REGISTERED TRADEMARKS OF AMS. ALL PATENTABLE MATERIALS CONTAINED IN THESE DOCUMENTS AND ORIGINATING WITH AMS WILL REMAIN THE SOLE PROPERTY OF AMS. THESE DRAWING, SPECIFICATIONS AND THE MATERIAL CONTAINED HEREIN MAY NOT BE REPRODUCED, TRANSMITTED, COPIED, DISTRIBUTED, MODIFIED, OR OTHERWISE DISPOSED OF (DIRECTLY OR INDIRECTLY) AND MAY NOT BE USED (IN WHOLE OR IN PART) TO ASSIST IN THE CONSTRUCTION, DESIGN, OR OTHER MAKING OF, OR FOR THE PURPOSE OF FURNISHING ANY INFORMATION FOR THE CONSTRUCTION, DESIGN, OR OTHER MAKING OF, ANY BUILDINGS (MODULAR OR OTHERWISE), DRAWINGS, SPECIFICATIONS, PRINTS, APPARATUS, OR PARTS THEREOF, EXCEPT AS EXPRESSLY PERMITTED BY WRITTEN CONSENT OF, OR IN A WRITTEN AGREEMENT WITH, AMS. SUBMITTAL OR DISTRIBUTION TO MEET OFFICIAL REGULATORY REQUIREMENTS WILL NOT BE CONSTRUED AS PUBLICATION IN DEROGATION OF AMS'S COPYRIGHT OR OTHER INTELLECTUAL-PROPERTY OR PROPRIETARY RIGHTS.

PRE-CHECKED SET NAME
72' x 40' BUILDING
STANDARD MODULAR BUILDING
(HIGH SEISMIC)
FORM®

SITE SPECIFIC PROJECT NAME
VENTURA COLLEGE
(1) 72'x40' BUILDING

MANUFACTURER PROFESSIONAL OF RECORD
LICENSED ARCHITECT PATRICK O'HARA No. C12631 Ren. 3-31-25 STATE OF CALIFORNIA

REVISIONS
1
2
3
4

DRAWN BY:	AA
SCALE:	AS NOTED
DATE:	03/05/25
PROJECT NO:	1895-24

SHEET TITLE:
TYPICAL MECHANICAL PLAN

SHEET NUMBER:
M1.1A-M

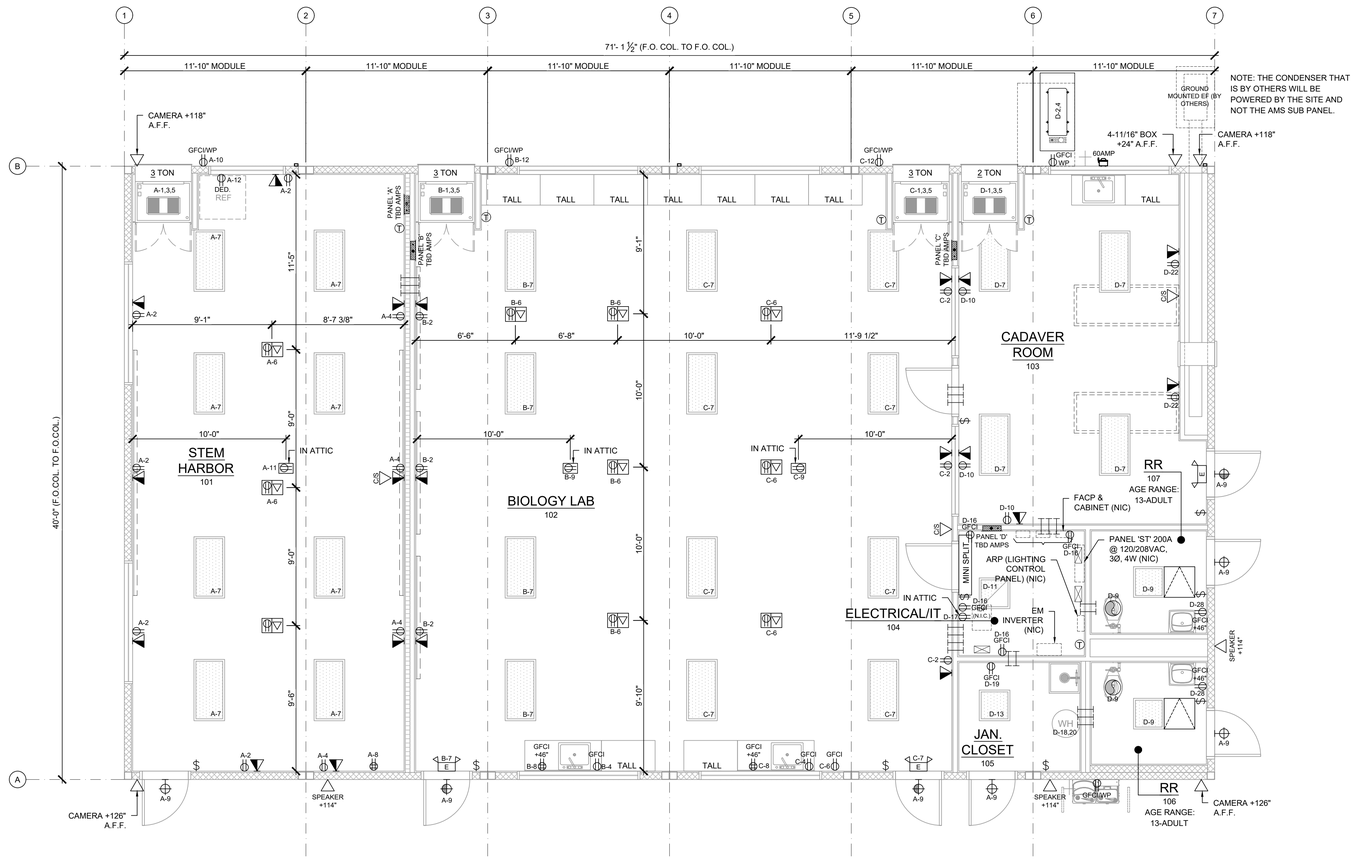

TYPICAL ELECTRICAL PLAN

SCALE: 1/4" = 1' - 0" | 1

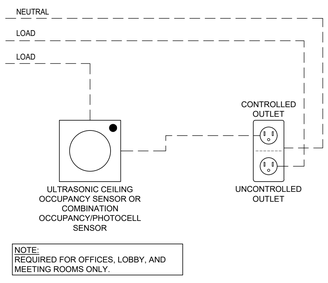

NOTE:
REQUIRED FOR OFFICES, LOBBY, AND MEETING ROOMS ONLY.

TYP. CONTROLED/UNCONTROLED RECEPTACLE WIRING DIAGRAM

N.T.S. | 2

ENERGY CONTROLS

1. AUTOMATIC DAYLIGHTING CONTROLS:
   NOT REQUIRED IN ROOMS WHERE COMBINED INSTALLED LIGHTING POWER IN COMBINED SKYLIT & PRIMARY DAYLIT ZONES ARE <120 WATTS. INSTALLED WATTAGE IN PRIMARY SIDELIT DAY LIT ZONE IS 90 WATTS (2x 45w, AS SHOWN IN THE SHADED AREAS). THEREFORE, AUTOMATIC DAYLIGHTING CONTROLS ARE ONLY REQUIRED WHEN "SOLATUBES" ARE INSTALLED. SEE A1.1. WHEN DAYLIT CONTROLS ARE REQUIRED, PROVIDE COMBINATION OCCUPANCY/PHOTOCELL SENSOR.
2. ENERGY MANAGEMENT CONTROL SYSTEM (EMCS) CONNECTION:
   PER TITLE 24 CODE, "AN EMCS MAY BE INSTALLED TO COMPLY WITH THE REQUIREMENTS OF ONE OR MORE LIGHTING CONTROLS IF IT MEETS THE MINIMUM REQUIREMENTS". PC MAY CONTAIN OCCUPANCY SENSORS AND PHOTOCELL CONTROL LIGHTING, IN THAT CASE, AN EMCS IS NOT REQUIRED FOR THIS PC.
3. SOLAR-READY ZONE REQUIREMENTS:
   REQUIREMENTS & TABLE CAN BE FOUND ON SHEET A2.0
4. SUGGESTED CONTROLS DIAGRAM FOR TYPICAL DAYLIT ZONE:

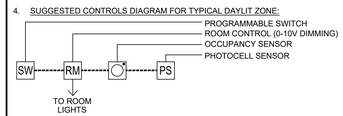

NOTE: ANT MONITORING EQUIPMENT OR ASSOCIATED SENSORS ARE SITE SPECIFIC AND ARE NOT INCLUDED IN THE BASE PC.

ENERGY NOTES

1. THE PROJECT ARCHITECT SHALL BE RESPONSIBLE FOR THE PLACEMENT OF HEAT & SMOKE DETECTORS, EVACS AND PULL STATIONS, AND COMPLETE FIRE ALARM SYSTEM WHEN THE SITE SPECIFIC PROJECT IS REQUIRED TO MEET THE PROVISIONS OF SB 575 & CBC 907.2.3.
2. ANY MONITORING EQUIPMENT OR ASSOCIATED SENSORS ARE SITE SPECIFIC AND ARE NOT INCLUDED IN THIS BASE PC.
3. PULL STATIONS ARE REQUIRED AT EVERY EXIT. AT ANY SPACE REQUIRING 2 OR MORE EXITS, PROVIDE EXIT SIGNS (CBC 1013) AND EMERGENCY EXIT ILLUMINATION (CBC 1008).
4. SEE PLANS FOR LOCATIONS OF ALL DEVICES.
5. STUB-OUT LOCATIONS FOR ELECTRICAL PANEL, FIRE ALARM, AND DATA BOXES ARE SHOWN DIAGRAMMATICAL ONLY. EXACT LOCATIONS MAY VARY +/- SEVERAL FEET. PLEASE CONTACT AMERICAN MODULAR SYSTEMS FOR EXACT LOCATIONS. POINT OF CONNECTION WILL BE AT FACE OF BUILDING.
6. STUB-UP ALL FIRE ALARM JUNCTION BOXES TO ACCESSIBLE ATTIC SPACE WITH 1/2" MIN. GALV. THIN WALL TUBING (EMT). DO NOT CONNECT FIRE ALARM CONDUIT WITH ANY OTHER ELECTRICAL CONDUIT.
7. THE LIGHTS FOR EACH ROOM OVER 250 SQ FT SHALL BE CONTROLLED BY ULTRASONIC OCCUPANCY SENSOR. WATT STOPPER W-500A, W-1000A, OR W-2000A (OR EQUAL) BASED ON THE ROOM SIZE, IN CONJUNCTION WITH BI-LEVEL SWITCHING.
8. FIXTURE MOUNTING SHALL COMPLY WITH CALIFORNIA SEISMIC REGULATIONS.
9. LIGHTING FIXTURES MAY BE INSTALLED ROTATED 90° FROM SHOWN TO MATCH T-BAR GRID LAYOUT.
10. ACCEPTANCE TESTS SHALL BE COMPLETED ON NEWLY INSTALLED OR REPLACEMENT OF LIGHTING CONTROLS BEFORE PROJECT COMPLETION PER THE CALIFORNIA ENERGY CODE SECTION 10-103. ACCEPTANCE TESTS MUST BE PERFORMED BY A CERTIFIED ACCEPTANCE TEST TECHNICIAN (ATT). THE ACCEPTANCE TESTING PROCEDURES MUST BE REPEATED, AND DEFICIENCIES CORRECTED UNTIL THE INSTALLATION OF THE SPECIFIED SYSTEMS CONFORM AND PASS THE REQUIRED ACCEPTANCE CRITERIA. COMPLETED NRCA FORMS SHALL BE SUBMITTED TO THE PROJECT INSPECTOR AND THE DISTRICT.

DEMAND RESPONSE CONTROLS

1. DEMAND RESPONSE CONTROLS ARE REQUIRED IN BUILDINGS LARGER THAN 10,000 S.F.
2. DEMAND RESPONSE CONTROLS, WHERE REQUIRED, ARE TO BE PROVIDED BY OTHERS.
3. DEMAND RESPONSE CONTROLS AND EQUIPMENT SHALL BE CAPABLE OF RECEIVING AND AUTOMATICALLY RESPONDING TO AT LEAST ONE STANDARD-BASED MESSAGING PROTOCOL WHICH ENABLES DEMAND RESPONSE AFTER RECEIVING A DEMAND SIGNAL.
4. SITE-SPECIFIC PROJECTS WHICH REQUIRE DEMAND RESPONSE CONTROLS MUST INCLUDE THE SUBMITTAL OF FORM NRCC-ELC-O1-E TO DSA (BY OTHERS).

GENERAL NOTES

STANDARD ELECTRICAL SYMBOLS

- ELECTRICAL PANEL - MOUNT FLUSH WITH WALL FINISH, U.O.N.
- EXTERIOR LIGHT FIXTURE @ EACH DOOR, LED OR EQUAL (MAX 40W)
- EXTERIOR LIGHT FIXTURE @ EACH DOOR, LED OR EQUAL (MAX 40W) - WHERE THERE ARE TWO OR MORE EXITS, A MINIMUM 90 MIN. BATTERY BACK-UP IS REQUIRED
- UNCONTROLLED-DUPLEX WALL CONVENIENCE OUTLET - MOUNT @ +18" A.F.F. TO CENTERLINE, U.O.N.
- FOURPLEX WALL OUTLET - MOUNT @ +18" A.F.F. TO CENTER LINE - U.O.N.
- WP/GFCI — WEATHER-PROOF GROUND FAULT CIRCUIT INTERRUPT OUTLET - MOUNT @ 18" A.F.F. TO CENTERLINE - U.O.N.
- GFCI — GROUND FAULT CIRCUIT INTERRUPT OUTLET - MOUNT @ 18" A.F.F. TO CENTERLINE - U.O.N.
- $ — CONTROLLED-SINGLE POLE LIGHT SWITCHES - MOUNT @ +48" A.F.F. MAX TO TOP OF BOX - HUBBELL PREMIUM, BRYANT HEAVY DUTY, OR LEVITON SPECIFICATIONS GRADE.
- T — THERMOSTAT - TOP OF BOX MOUNTED @ +48" A.F.F.
- DATA/COMMUNICATION - OUTLET ONLY - 4" SQ. BOX WITH DUAL GANG DEVICE RING AND COVER - MOUNT @ +18" A.F.F. TO CENTERLINE, U.O.N. AND PROVIDE A 1-1/4" CONDUIT STUBBED ABOVE CEILING - DEVICE BY OTHERS
- ULTRASONIC OCCUPANCY SENSOR - MOUNTED TO FINISH CEILING (PROVIDE WITH COMBINATION PHOTOCELL SENSOR WHEN DAYLIT CONTROLS ARE REQUIRED)
- 2'x4' LED EDGE FIT FIXTURE, MODEL: LSI, SFP24 5601K LUMENS - 45 WATTS MAX OR EQUAL
- 2'x2' LED EDGE FIT FIXTURE, MODEL: LSI, SFP22 3163K LUMENS - 30 WATTS MAX OR EQUAL
- 24 HOUR EMERGENCY LIGHTING WITH MINIMUM 90-MINUTE BATTERY BACK-UP - WHERE TWO OR MORE EXITS ARE REQUIRED
- E — EMERGENCY EXIT LIGHT, - WHERE THERE ARE TWO OR MORE EXITS, AN EXIT SIGN WITH INTEGRAL EMERGENCY LIGHTING W/MINIMUM 90-MINUTE BATTERY BACK-UP IS REQUIRED.
- FLOORBOX - UNCONTROLLED DUPLEX FLOOR OUTLET & DATA/COMMUNICATIONS WITH (2) 1-1/4" C. TO BELOW FLOOR ACCESS IN FLOOR BOX.
- 2'x2' - 24 HOUR EMERGENCY LIGHTING WITH MINIMUM 90-MINUTE BATTERY BACK-UP - WHERE TWO OR MORE EXITS ARE REQUIRED
- C/S — SURFACE MOUNTED CLOCK/SPEAKER - OUTLET ONLY - 4" SQ. BOX WITH SINGLE GANG DEVICE RING AND COVER - MOUNT @ +92" A.F.F. TO CENTERLINE, U.O.N. AND PROVIDE A 1" CONDUIT STUBBED ABOVE CEILING - DEVICE BY OTHERS
- DATA/COMMUNICATIONS - OUTLET ONLY - 4" SQ. BOX WITH SINGLE GANG DEVICE RING AND COVER - MOUNT @ +18" A.F. TO CENTERLINE, U.O.N. AND PROVIDE A 1" CONDUIT STUBBED ABOVE CEILING - DEVICE BY OTHERS
- CONDUIT CROSS OVERS - LOCATED IN WALL/ ABOVE CEILING AT FULL HEIGHT WALLS - 2"C. U.O.N.

IDENTIFICATION STAMP
DIV. OF THE STATE ARCHITECT
APP: 03-124589 INC:
REVIEWED FOR
SS ☑ FLS ☑ ACS ☑
DATE: 04/15/2025

AMS®
American Modular Systems
787 Spreckels Ave., Manteca, CA 95336
Phone (209) 825-1921 Fax (209) 825-7018
www.americanmodular.com

INTELLECTUAL-PROPERTY & PROPRIETARY RIGHTS STATEMENT
COPYRIGHT © AMERICAN MODULAR SYSTEMS (AMS)
AMS OWNS ALL COPYRIGHT AND OTHER INTELLECTUAL-PROPERTY AND PROPRIETARY RIGHTS IN THESE DRAWINGS, SPECIFICATIONS, AND THE MATERIAL CONTAINED HEREIN. CERTAIN ELEMENTS SHOWN IN THESE DOCUMENTS ARE REGISTERED TRADEMARKS OF AMS. ALL PATENTABLE MATERIALS CONTAINED IN THESE DOCUMENTS AND ORIGINATING WITH AMS WILL REMAIN THE SOLE PROPERTY OF AMS. THESE DRAWING, SPECIFICATIONS, AND THE MATERIAL CONTAINED HEREIN MAY NOT BE REPRODUCED, TRANSMITTED, COPIED, DISTRIBUTED, MODIFIED, OR OTHERWISE DISPOSED OF (DIRECTLY OR INDIRECTLY) AND MAY NOT BE USED (IN WHOLE OR IN PART) TO ASSIST IN THE CONSTRUCTION, DESIGN, OR OTHER MAKING OF, OR FOR THE PURPOSE OF FURNISHING ANY INFORMATION FOR THE CONSTRUCTION, DESIGN, OR OTHER MAKING OF, ANY BUILDINGS (MODULAR OR OTHERWISE), DRAWINGS, SPECIFICATIONS, PRINTS, APPARATUS, OR PARTS THEREOF, EXCEPT AS EXPRESSLY PERMITTED BY WRITTEN CONSENT OF, OR IN A WRITTEN AGREEMENT WITH, AMS. SUBMITTAL OR DISTRIBUTION TO MEET OFFICIAL REGULATORY REQUIREMENTS WILL NOT BE CONSTRUED AS PUBLICATION IN DEROGATION OF AMS'S COPYRIGHT OR OTHER INTELLECTUAL-PROPERTY OR PROPRIETARY RIGHTS.

PRE-CHECKED SET NAME
72' x 40' BUILDING
STANDARD MODULAR BUILDING
(HIGH SEISMIC)
FORM®

SITE SPECIFIC PROJECT NAME
VENTURA COLLEGE
(1) 72'x40' BUILDING

MANUFACTURER PROFESSIONAL OF RECORD
LICENSED ARCHITECT
PATRICK CRAWFORD
No. C12631
Ren. 3-31-25
STATE OF CALIFORNIA

REVISIONS
1.
2.
3.
4.

DRAWN BY:	AA
SCALE:	AS NOTED
DATE:	12/30/24
PROJECT NO:	1895-24

SHEET TITLE:
TYPICAL
ELECTRICAL PLAN

SHEET NUMBER:
E1.0-M

250.52 GROUNDING ELECTRODES.

250.52(A) ELECTRODES PERMITTED FOR GROUNDING.

(1) METAL UNDERGROUND WATER PIPE. A METAL UNDERGROUND WATER PIPE IN DIRECT CONTACT WITH THE EARTH FOR 3.0 M (10 FT) OR MORE (INCLUDING ANY METAL WELL CASING BONDED TO THE PIPE) AND ELECTRICALLY CONTINUOUS (OR MADE ELECTRICALLY CONTINUOUS BY BONDING AROUND INSULATING JOINTS OR INSULATING PIPE) TO THE POINTS OF CONNECTION OF THE GROUNDING ELECTRODE CONDUCTOR AND THE BONDING CONDUCTOR(S) OR JUMPER(S), IF INSTALLED.

(2) METAL IN-GROUND SUPPORT STRUCTURE(S). ONE OR MORE METAL IN-GROUND SUPPORT STRUCTURE(S) IN DIRECT CONTACT WITH THE EARTH VERTICALLY FOR 3.0 M (10 FT) OR MORE, WITH OR WITHOUT CONCRETE ENCASEMENT. IF MULTIPLE METAL IN-GROUND SUPPORT STRUCTURES ARE PRESENT AT A BUILDING OR A STRUCTURE, IT SHALL BE PERMISSIBLE TO BOND ONLY ONE INTO THE GROUNDING ELECTRODE SYSTEM.

INFORMATIONAL NOTE: METAL IN-GROUND SUPPORT STRUCTURES INCLUDE, BUT ARE NOT LIMITED TO, PILINGS, CASINGS, AND OTHER STRUCTURAL METAL.

(3) CONCRETE-ENCASED ELECTRODE. A CONCRETE-ENCASED ELECTRODE SHALL CONSIST OF AT LEAST 6.0 M (20 FT) OF EITHER (1) OR (2):

(1) ONE OR MORE BARE OR ZINC GALVANIZED OR OTHER ELECTRICALLY CONDUCTIVE COATED STEEL REINFORCING BARS OR RODS OF NOT LESS THAN 13 MM (1⁄2 IN.) IN DIAMETER, INSTALLED IN ONE CONTINUOUS 6.0 M (20 FT) LENGTH, OR IF IN MULTIPLE PIECES CONNECTED TOGETHER BY THE USUAL STEEL TIE WIRES, EXOTHERMIC WELDING, WELDING, OR OTHER EFFECTIVE MEANS TO CREATE A 6.0 M (20 FT) OR GREATER LENGTH; OR

(2) BARE COPPER CONDUCTOR NOT SMALLER THAN 4 AWG

METALLIC COMPONENTS SHALL BE ENCASED BY AT LEAST 50 MM (2 IN.) OF CONCRETE AND SHALL BE LOCATED HORIZONTALLY WITHIN THAT PORTION OF A CONCRETE FOUNDATION OR FOOTING THAT IS IN DIRECT CONTACT WITH THE EARTH OR WITHIN VERTICAL FOUNDATIONS OR STRUCTURAL COMPONENTS OR MEMBERS THAT ARE IN DIRECT CONTACT WITH THE EARTH. IF MULTIPLE CONCRETE-ENCASED ELECTRODES ARE PRESENT AT A BUILDING OR STRUCTURE, IT SHALL BE PERMISSIBLE TO BOND ONLY ONE INTO THE GROUNDING ELECTRODE SYSTEM.

INFORMATIONAL NOTE: CONCRETE INSTALLED WITH INSULATION, VAPOR BARRIERS, FILMS OR SIMILAR ITEMS SEPARATING THE CONCRETE FROM THE EARTH IS NOT CONSIDERED TO BE IN "DIRECT CONTACT" WITH THE EARTH.

(4) GROUND RING. A GROUND RING ENCIRCLING THE BUILDING OR STRUCTURE, IN DIRECT CONTACT WITH THE EARTH, CONSISTING OF AT LEAST 6.0 M (20 FT) OF BARE COPPER CONDUCTOR NOT SMALLER THAN 2 AWG.

(5) ROD AND PIPE ELECTRODES. ROD AND PIPE ELECTRODES SHALL NOT BE LESS THAN 2.44 M (8 FT) IN LENGTH AND SHALL CONSIST OF THE FOLLOWING MATERIALS.

(A) GROUNDING ELECTRODES OF PIPE OR CONDUIT SHALL NOT BE SMALLER THAN METRIC DESIGNATOR 21 (TRADE SIZE 3⁄4) AND, WHERE OF STEEL, SHALL HAVE THE OUTER SURFACE GALVANIZED OR OTHERWISE METAL-COATED FOR CORROSION PROTECTION.

(B) ROD-TYPE GROUNDING ELECTRODES OF STAINLESS STEEL AND COPPER OR ZINC COATED STEEL SHALL BE AT LEAST 15.87 MM (5⁄8 IN.) IN DIAMETER, UNLESS LISTED.

(6) OTHER LISTED ELECTRODES. OTHER LISTED GROUNDING ELECTRODES SHALL BE PERMITTED.

(7) PLATE ELECTRODES. EACH PLATE ELECTRODE SHALL EXPOSE NOT LESS THAN 0.186 M2 (2 FT2) OF SURFACE TO EXTERIOR SOIL. ELECTRODES OF BARE OR ELECTRICALLY CONDUCTIVE COATED IRON OR STEEL PLATES SHALL BE AT LEAST 6.4 MM (1⁄4 IN.) IN THICKNESS. SOLID, UNCOATED ELECTRODES OF NONFERROUS METAL SHALL BE AT LEAST 1.5 MM (0.06 IN.) IN THICKNESS.

(8) OTHER LOCAL METAL UNDERGROUND SYSTEMS OR STRUCTURES. OTHER LOCAL METAL UNDERGROUND SYSTEMS OR STRUCTURES SUCH AS PIPING SYSTEMS, UNDERGROUND TANKS, AND UNDERGROUND METAL WELL CASINGS THAT ARE NOT BONDED TO A METAL WATER PIPE.

(B) NOT PERMITTED FOR USE AS GROUNDING ELECTRODES
THE FOLLOWING SYSTEMS AND MATERIALS SHALL NOT BE USED AS GROUNDING ELECTRODES:

(1) METAL UNDERGROUND GAS PIPING SYSTEMS
(2) ALUMINUM
(3) THE STRUCTURES AND STRUCTURAL REINFORCING STEEL DESCRIBED IN 680.26(B)(1) AND (B)(2)

INFORMATIONAL NOTE:
SEE 250.104(B) FOR BONDING REQUIREMENTS OF GAS PIPING.

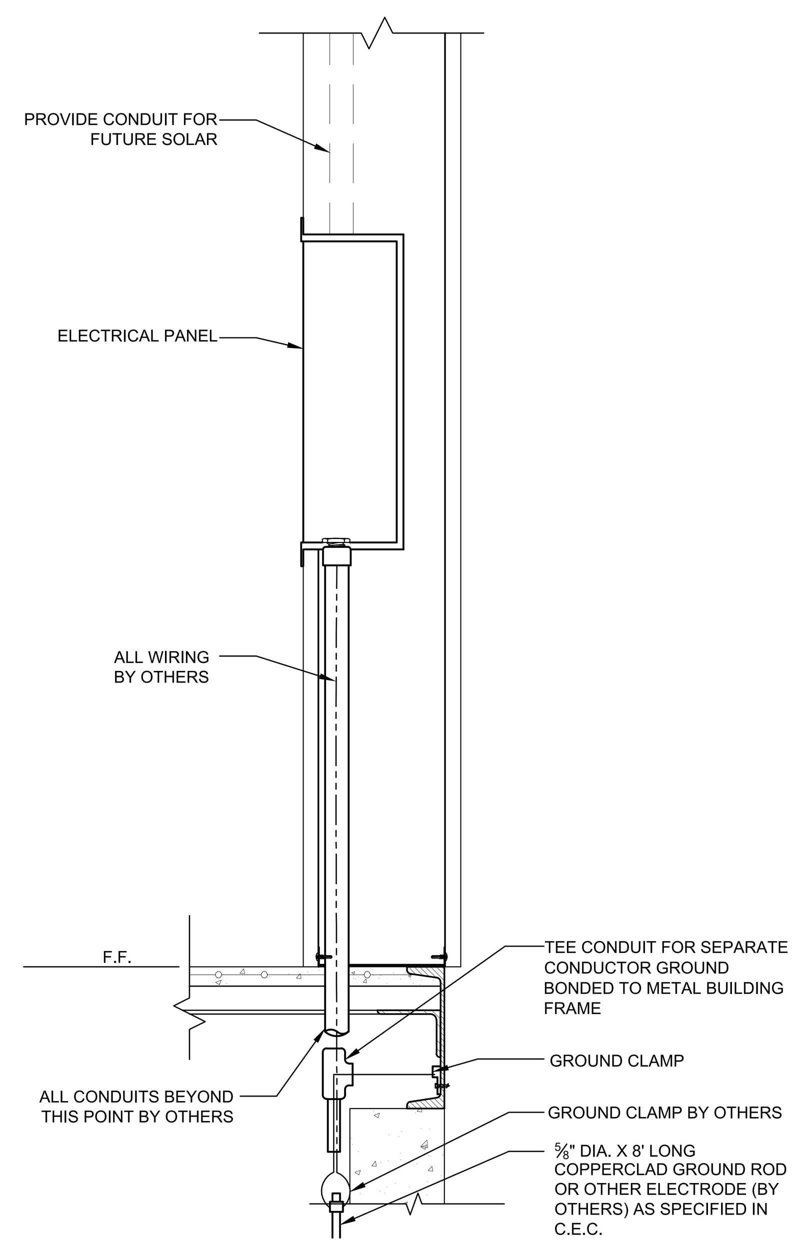

1. SIZE OF CONDUCTORS SHALL COMPLY w/CEC.A
2. BOND SEPARATE CONDUCTORS FROM GROUND ROD TO ELECTRICAL PANEL & METAL BUILDING FRAME (CEC). IN ADDITION TO THE DETAIL SHOWN ABOVE, BOND THE ELECTRICAL GROUND TO METAL WATER PIPE EMBEDDED AT LEAST 10' INTO THE SOIL IF AVAILABLE (CEC).
3. ELECTRICAL BOND MODULES TOGETHER W/#8 CU @ MODLINE. BY MANUFACTURER. CHECK RESISTANCE TO GROUND. IF RESISTANCE EXCEEDS 25 OHMS, INSTALL ADDITIONAL GROUND RODS (CEC) AS REQUIRED. GROUNDING DETAIL PER DSA IR E-1. INSPECTOR TO WITNESS GROUNDING TEST.

ELECTRICAL PANEL CONNECTION DETAIL - UNDERFLOOR OPTION

SCALE: 1-1/2" = 1' - 0" | 3

PANEL: A — PHASE: 3Ø — VOLTS: 120/208 — BUSS: 125 Amp — MAIN: 100 Amp — LOCATION: Interior — FEED: Bottom — MOUNTING: Recessed

OBJECT DESCRIPTION	WATTS PER	NO. OF	LCL	A	B	C	BRK	POLE	WIRE SIZE	CKT NO	A	B	C	CKT NO	WIRE SIZE	POLE	BRK	A	B	C	LCL	NO. OF	WATTS PER	OBJECT DESCRIPTION
	3500	1	X	3500						1	X			2	#12	1	20	900				5	180	RECEPT
HVAC CAH-2 3-TON	3500	1			3500		60	3	#6	3		X		4	#12	1	20		720			4	180	RECEPT
	3500	1				3500				5			X	6	#12	1	20			540		3	180	FLOOR RECEPT
INTERIOR LIGHTING	50	8	X	400			20	1	#12	7	X			8	#12	1	20	360			X	1	360	QUAD
EXTERIOR LIGHTING	25	7			175		20	1	#12	9		X		10	#12	1	20		180			1	180	RECEPT WP GFCI
ATTIC DUPLEX	180	1				180	20	1	#12	11			X	12	#12	1	20			1200		1	1200	DED. RECEPT (GFCI)
SPACE				0						13	X			14				0						SPACE
SPACE					0					15		X		16					0					SPACE
SPACE						0				17			X	18						0				SPACE
SPACE				0						19	X			20				0						SPACE
			LEG TOTALS	3900	3675	3680												1260	900	1740	LEG TOTALS			

LCL=1065+15155=16220
TOTAL WATTS=16220 — LEG BALANCE = 8.5% — TOTAL AMPS: 45.08

PANEL: C — PHASE: 3Ø — VOLTS: 120/208 — BUSS: 125 Amp — MAIN: 100 Amp — LOCATION: Interior — FEED: Bottom — MOUNTING: Recessed

OBJECT DESCRIPTION	WATTS PER	NO. OF	LCL	A	B	C	BRK	POLE	WIRE SIZE	CKT NO	A	B	C	CKT NO	WIRE SIZE	POLE	BRK	A	B	C	LCL	NO. OF	WATTS PER	OBJECT DESCRIPTION
	3500	1	X	3500						1	X			2	#12	1	20	540				3	180	RECEPT
HVAC CAH-2 3-TON	3500	1			3500		60	3	#6	3		X		4	#12	1	20		750			1	750	RECEPT (GFCI)
	3500	1				3500				5			X	6	#12	1	20			720		4	180	FLOOR RECEPT
INTERIOR LIGHTING	50	9	X	450			20	1	#12	7	X			8	#12	1	20	360				1	360	QUAD (GFCI)
ATTIC DUPLEX	180	1			180		20	1	#12	9		X		10	#12	1	20		180			1	180	RECEPT
SPACE						0				11			X	12	#12	1	20			180		1	180	RECEPT WP GFCI
SPACE				0						13	X			14				0						SPACE
SPACE					0					15		X		16					0					SPACE
SPACE						0				17			X	18						0				SPACE
SPACE				0						19	X			20				0						SPACE
			LEG TOTALS	3950	3680	3500												900	930	900	LEG TOTALS			

LCL=987.5+13860=14847.5
TOTAL WATTS=14847.5 — LEG BALANCE = 4.9% — TOTAL AMPS: 41.26

PANEL: B — PHASE: 3Ø — VOLTS: 120/208 — BUSS: 125 Amp — MAIN: 100 Amp — LOCATION: Interior — FEED: Bottom — MOUNTING: Recessed

OBJECT DESCRIPTION	WATTS PER	NO. OF	LCL	A	B	C	BRK	POLE	WIRE SIZE	CKT NO	A	B	C	CKT NO	WIRE SIZE	POLE	BRK	A	B	C	LCL	NO. OF	WATTS PER	OBJECT DESCRIPTION
	3500	1	X	3500						1	X			2	#12	1	20	540				3	180	RECEPT
HVAC CAH-2 3-TON	3500	1			3500		60	3	#6	3		X		4	#12	1	20		750			1	750	RECEPT (GFCI)
	3500	1				3500				5			X	6	#12	1	20			720		4	180	FLOOR RECEPT
INTERIOR LIGHTING	50	5	X	250			20	1	#12	7	X			8	#12	1	20	360				1	360	QUAD (GFCI)
ATTIC DUPLEX	180	1			180		20	1	#12	9		X		10					0					SPACE
SPACE						0				11			X	12	#12	1	20			180		1	180	RECEPT WP GFCI
SPACE				0						13	X			14				0						SPACE
SPACE					0					15		X		16					0					SPACE
SPACE						0				17			X	18						0				SPACE
SPACE				0						19	X			20				0						SPACE
			LEG TOTALS	3750	3680	3500												900	750	900	LEG TOTALS			

LCL=937.5+13480=14417.5
TOTAL WATTS=14417.5 — LEG BALANCE = 2.8% — TOTAL AMPS: 40.07

PANEL: D — PHASE: 3Ø — VOLTS: 120/208 — BUSS: 125 Amp — MAIN: 125 Amp — LOCATION: Interior — FEED: Bottom — MOUNTING: Recessed

OBJECT DESCRIPTION	WATTS PER	NO. OF	LCL	A	B	C	BRK	POLE	WIRE SIZE	CKT NO	A	B	C	CKT NO	WIRE SIZE	POLE	BRK	A	B	C	LCL	NO. OF	WATTS PER	OBJECT DESCRIPTION
	3500	1	X	3500						1	X			2				1800			X	1	1800	3/4 MINI-SPLIT (HIGH
HVAC CAH-1 2-TON	3500	1			3500		60	3	#6	3		X		4	#6	2	60		1800				1800	WALL POWERED BY CONDENSER)
	3500	1				3500				5			X	6						0	X			SPACE
INTERIOR LIGHTING	50	4		200			20	1	#12	7	X			8				0						SPACE
RESTROOM LIGHTING AND EF	160	2			320		20	1	#12	9		X		10	#12	1	20		540			3	180	RECEPT
INTERIOR LIGHTING	50	1				50	20	1	#12	11			X	12						0				SPACE
INTERIOR LIGHTING	50	1		50			20	1	#12	13	X			14	#12	1	20	500				1	500	SPARE
SPACE					0					15		X		16	#12	1	20		720			4	180	RECEPT (GFCI)
IDF	180	1				180	20	1	#12	17			X	18		2				4500	X	1	4500	WATER HEATER
RECEPT	180	1		180			20	1	#12	19	X			20				4500				1	4500	
SPACE					0					21		X		22	#12	1	20		360			2	180	RECEPT
SPACE						0				23			X	24						0				SPACE
SPACE				0						25	X			26				0						SPACE
SPACE					0					27		X		28	#12	1	20		360			2	180	RECEPT (GFCI)
SPACE						0				29			X	30						0				SPACE
SPACE				0						31	X			32				0						SPACE
SPACE					0					33		X		34					0					SPACE
SPACE						0				35			X	36						0				SPACE
SPACE				0						37	X			38				0						SPACE
SPACE					0					39		X		40					0					SPACE
SPACE						0				41			X	42						0				SPACE
			LEG TOTALS	3930	3820	3730												6800	3780	4500	LEG TOTALS			

LCL=2450+26560=29010
TOTAL WATTS=29010 — LEG BALANCE = 17.1% — TOTAL AMPS: 80.62

NOTE:
FIRE ALARM DEDICATED CIRCUIT SHALL BE IDENTIFIED WITH A RED MARKED DISCONNECT WITH LOCK-ON CAPABILITY (NFPA 72 10.6.5.2)

LOAD PANEL CALCULATIONS

FIRE ALARM SYSTEM

1. THE FIRE ALARM SYSTEM SHALL CONFORM TO THE CALIFORNIA ELECTRICAL CODE, CALIFORNIA FIRE CODE AND THE CALIFORNIA BUILDING CODE.
2. INSTALLATION OF THE FIRE ALARM SYSTEM SHALL NOT BE STARTED UNTIL DETAILED PLANS AND SPECIFICATIONS, INCLUDING CALIFORNIA STATE FIRE MARSHAL LISTINGS FOR EACH COMPONENT OF THE SYSTEM, HAVE BEEN APPROVED BY DSA.
3. UPON COMPLETION OF THE INSTALLATION OF THE FIRE ALARM SYSTEM, A SATISFACTORY TEST OF THE ENTIRE SYSTEM SHALL BE MADE IN THE PRESENCE OF THE ENFORCING AGENCY.
4. JUNCTION BOXES - GALVANIZED SHEET METAL, SQUARE OR RECTANGULAR WITH BLANK COVERS. LOCATE ONE BOX AT REAR OF BUILDING NEAR MAIN ELECTRICAL PANEL @ +18" ABOVE FINISH FLOOR FOR FUTURE CONNECTION.
5. COVERS - INSTALL GASKETED, METAL, WATERPROOF, FINISH COVERS AT EXTERIOR LOCATIONS. INSTALL FINISH COVERS AT INTERIOR LOCATIONS.
6. THE AUTOMATIC ALARM SYSTEM SHALL BE INSTALLED, TESTED, AND MAINTAINED IN ACCORDANCE WITH THE STATE FIRE MARSHALL'S REGULATIONS (CBC SEC. 907.2.3) AND THE 2016 EDITION OF NFPA 72.
7. THE LOCATION OF AUTOMATIC DETECTORS, MANUAL STATIONS AND OTHER FIRE ALARM EQUIPMENT AND DEVICES, AS SHOWN ON PLAN, ARE FOR REFERENCE ONLY AND DO NOT CONSTITUTE SHOP DRAWINGS WHICH ARE REQUIRED FOR REVIEW AND APPROVAL.
8. ALARM-INDICATING DEVICES OF A FIRE ALARM SYSTEM INTENDED TO ALERT ALL OCCUPANTS SHALL CAUSE A LEVEL OF AUDIBILITY OF NOT LESS THAN 15 dBA ABOVE THE AVERAGE AMBIENT NOISE LEVELS OR 5dBA ABOVE THE MAXIMUM SOUND LEVEL HAVING A DURATION OF 60 SECONDS, WHICHEVER IS GREATER, MEASURED 5' ABOVE THE FLOOR. AMBIENT NOISE LEVELS MEANS THE LEVEL WHICH CAN NORMALLY BE EXPECTED WHEN THE FACILITY, BUILDING, ROOM, OR AREA IS FUNCTIONING UNDER NORMAL OPERATING OR WORKING CONDITIONS (NFPA 72, SEC. 18.4.1).
9. THE ALARM SYSTEM SHALL ACTIVATE A MEANS OF WARNING THE HEARING IMPAIRED. FLASHING VISUAL WARNINGS SHALL HAVE A FLASH RATE NOT EXCEEDING TWO FLASHES PER SECOND (2 HZ), NOR BE LESS THAN ONE FLASH EVERY SECOND (1 HZ). STROBE SIGNALING DEVICES FOR THE HEARING IMPAIRED SHALL BE STATE FIRE MARSHALL APPROVED AND LISTED (NFPA 72, SEC. 18.5.3).
10. AUTOMATIC FIRE ALARM SYSTEM SHALL TRANSMIT THE ALARM, SUPERVISORY AND TROUBLE SIGNALS TO AN APPROVED SUPERVISING STATION AS REQUIRED BY NFPA 72 CHAPTER 26 AS AMENDED BY ARTICLE 91. THE SUPERVISING STATION SHALL BE LISTED AS EITHER UUFX OR UUJS BY UNDERWRITERS LABORATORY OR SHALL MEET THE REQUIREMENTS OF FACTORY MUTUAL RESEARCH APPROVAL STANDARD 3011. SUPERVISION OF SYSTEM AND LEASED TELEPHONE LINES SHALL BE ARRANGED BY OWNER. IF TESTING RESULTS DETERMINE FIRE ALARM AUDIBILITY DOES NOT MEET 15db OVER AMBIENT NOISE LEVELS, ADDITIONAL FIRE ALARM SIGNALING DEVICES MAY BE REQUIRED BY THE ENFORCING AGENCY.

NOTE:
SEE SHEET M1.0 FOR ALL BRACING AND ANCHORAGE NOTES.

GENERAL NOTES

1. GROUNDING ELECTRODE CONDUCTOR SIZED PER CEC.
2. PROVIDE BONDS TO BLDG. STEEL & PANEL (#8 CU)
3. PANEL TO LISTED FOR USE AS SERVICE EQUIPMENT.
4. ALL PANELS, SWITCHES, DISCONNECTS, BREAKERS, METERS, AND OTHER ELECTRICAL ELEMENTS SHALL BE PLACED ABOVE THE ELEVATION REQUIRED BY ASCE 24-14, SECTION 7.2.
5. WHERE FLEXIBLE CONDUIT IS PASSING BETWEEN BUILDING SEPARATION JOINTS, PROVIDE SUFFICIENT LENGTH OF CONDUIT TO PERMIT DIFFERENTIAL DISPLACEMENTS BETWEEN BUILDINGS IN COMPLIANCE WITH ASCE 7 SECTION 13.6.9 & DSA IR PC-2 SECTION 1.18. ADDITIONAL CONDUIT & JOINT DETAIL SHALL BE PROVIDED BY OTHERS.

FIXTURE NOTES:

1. ALL FLUORESCENT LIGHT FIXTURES SHALL HAVE ENERGY SAVING LAMPS AND BALLASTS.
2. LUMINARIES/BALLASTS SHALL BE CERTIFIED PER CALIFORNIA BUILDING CODE, TITLE 24.
3. FLUORESCENT LIGHT FIXTURE TYPE "A" SHALL BE CONTROLLED TO PROVIDE TWO LEVELS OF LIGHTING. SWITCH (SA) SHALL CONTROL THE TWO OUTER LAMPS AND SWITCH (SB) SHALL CONTROL THE TWO INNER LAMPS.
4. ELECTRICAL SERVICE DROP AND CONNECTIONS SUPPLIED BY OTHERS.
5. MANUFACTURER TO PROVIDE STUB-OUT FROM BACK OF ELECTRICAL PANEL THROUGH THE EXTERIOR WALL OR TO BELOW FLOOR FOR RECEIVING EITHER UNDERGROUND OR OVERHEAD SERVICE & FITTING FOR GROUNDING CABLE.
6. ELECTRICAL PANEL BOARD SHALL BE RECESS MOUNTED INSIDE THE BUILDING, SIZED TO ACCOMMODATE ALL CONNECTED LOADS INCLUDING SPACES AS SHOWN. OVERCURRENT PROTECTIVE DEVICES IN THE PANEL BOARDS SHALL HAVE ADEQUATE SHORT CIRCUIT INTERRUPTING CAPACITY. ALL BUSES INCLUDING BUS SHALL BE COPPER OR ALUMINUM.
7. 2X4 FLUORESCENT FIXTURES SHALL HAVE A STEEL FRAME, LENS SHALL BE HINGED AND LOCKED IN PLACE BY TWO LOCKING DEVICES. THE LENS DIFFUSERS SHALL BE KHS, INC. #KSH-2, CAROLITE, INC. #C-12 OR PLASKOLITE, INC. #PL21A. MINIMUM LENS THICKNESS SHALL BE 0.125 INCHES.
8. FLUORESCENT BALLAST SHALL BE ENERGY SAVER WHILE MAINTAINING FULL LIGHT OUTPUT, CLASS "P" EQUIPPED WITH THERMAL PROTECTORS, GUARANTEED AGAINST FAILURE FOR (2) YEARS AND BE REPLACEABLE FROM INSIDE THE FIXTURE.
9. CLOCK - 12" DIAL CLOCK ON CLOCK OUTLET.
   A. CLOCK SHALL BE GENERAL ELECTRIC MODEL 2912 129V 60 CYCLE
   B. CLOCK OUTLET SHALL BE BRYANT #2828 OR EQUAL WITH SEPARABLE HANGING CLIP & APP'D RECEPT. THE H.V.A.C. UNIT FEEDER CIRCUIT - PANEL CIRCUIT BREAKER, FEEDER WIRE, UNIT DISCONNECT AND FUSES (WHERE USED) - IS TO BE COORDINATED WITH THE NAME PLATE DATA AT THE TIME OF MANUFACTURE. H.V.A.C. UNITS HAVING KVA RATINGS LARGER THAN THAT INDICATED ON THIS PANEL SCHEDULE WILL NOT BE ALLOWED TO BE INSTALLED ON THIS BUILDING.
   C. IF 60 DEGREES WIRE IS TO BE USED IN THIS INSTALLATION, CALCULATIONS DEMONSTRATING AMPACITY SHALL BE PROVIDED ON THE DRAWING.

GENERAL NOTES

IDENTIFICATION STAMP
DIV. OF THE STATE ARCHITECT
APP: 03-124589 INC:
REVIEWED FOR
SS ☑ FLS ☑ ACS ☑
DATE: 04/15/2025

AMS®
American Modular Systems
787 Spreckels Ave., Manteca, CA 95336
Phone (209) 825-1921 Fax (209) 825-7018
www.americanmodular.com

INTELLECTUAL-PROPERTY & PROPRIETARY RIGHTS STATEMENT
COPYRIGHT © AMERICAN MODULAR SYSTEMS (AMS)
AMS OWNS ALL COPYRIGHT AND OTHER INTELLECTUAL-PROPERTY AND PROPRIETARY RIGHTS IN THESE DRAWINGS, SPECIFICATIONS, AND THE MATERIAL CONTAINED HEREIN. CERTAIN ELEMENTS SHOWN IN THESE DOCUMENTS ARE REGISTERED TRADEMARKS OF AMS. ALL PATENTABLE MATERIALS CONTAINED IN THESE DOCUMENTS AND ORIGINATING WITH AMS WILL REMAIN THE SOLE PROPERTY OF AMS. THESE DRAWING, SPECIFICATIONS, AND THE MATERIAL CONTAINED HEREIN MAY NOT BE REPRODUCED, TRANSMITTED, COPIED, DISTRIBUTED, MODIFIED, OR OTHERWISE DISPOSED OF (DIRECTLY OR INDIRECTLY) AND MAY NOT BE USED (IN WHOLE OR IN PART) TO ASSIST IN THE CONSTRUCTION, DESIGN, OR OTHER MAKING OF, OR FOR THE PURPOSE OF FURNISHING ANY INFORMATION FOR THE CONSTRUCTION, DESIGN, OR OTHER MAKING OF, ANY BUILDINGS (MODULAR OR OTHERWISE), DRAWINGS, SPECIFICATIONS, PRINTS, APPARATUS, OR PARTS THEREOF, EXCEPT AS EXPRESSLY PERMITTED BY WRITTEN CONSENT OF, OR IN A WRITTEN AGREEMENT WITH, AMS. SUBMITTAL OR DISTRIBUTION TO MEET OFFICIAL REGULATORY REQUIREMENTS WILL NOT BE CONSTRUED AS PUBLICATION IN DEROGATION OF AMS'S COPYRIGHT OR OTHER INTELLECTUAL-PROPERTY OR PROPRIETARY RIGHTS.

PRE-CHECKED SET NAME
72' x 40' BUILDING
STANDARD MODULAR BUILDING
(HIGH SEISMIC)
FORM®

SITE SPECIFIC PROJECT NAME
VENTURA COLLEGE
(1) 72'x40' BUILDING

MANUFACTURER PROFESSIONAL OF RECORD
LICENSED ARCHITECT — RANDALL PATRICK CAVANAGH — No. C12631 — Ren. 3-31-25 — STATE OF CALIFORNIA

REVISIONS
1
2
3
4

DRAWN BY:	AA
SCALE:	AS NOTED
DATE:	12/30/24
PROJECT NO:	1895-24

SHEET TITLE:
ELECTRICAL NOTES & DETAILS

SHEET NUMBER:
E1.2-M

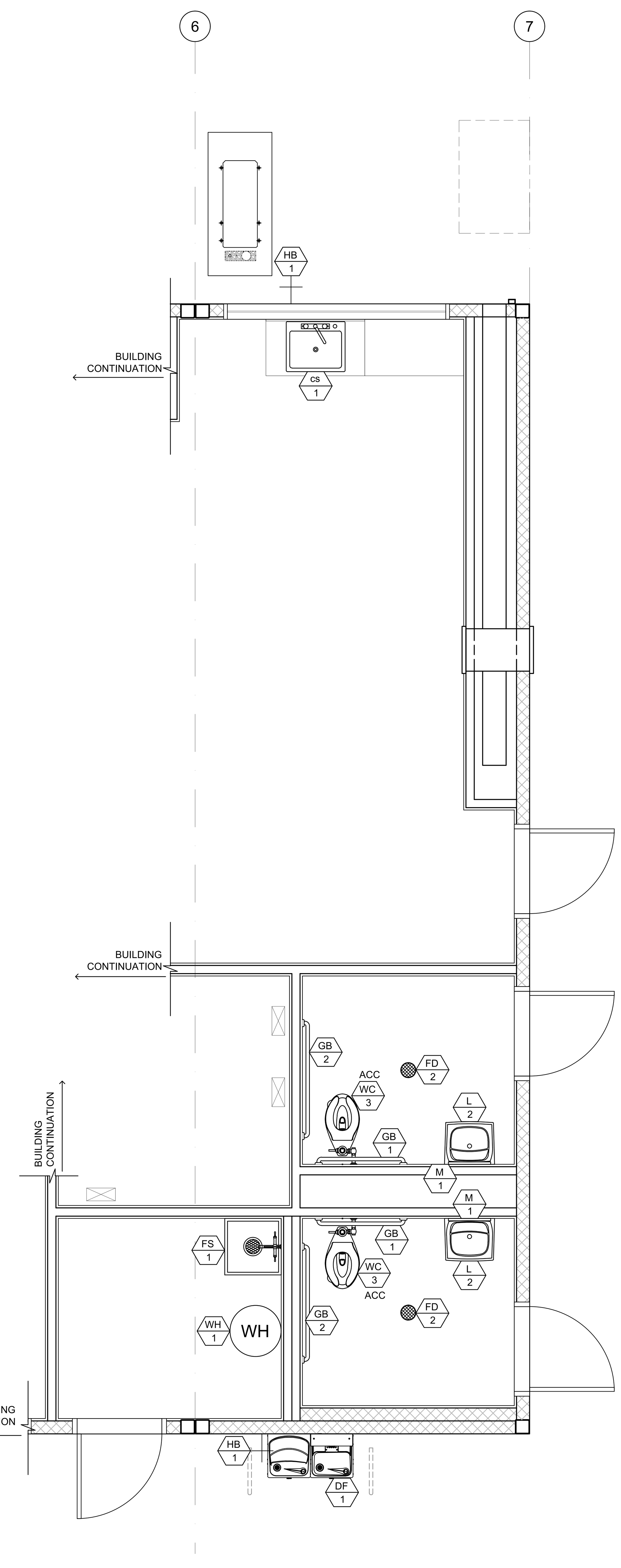

STAFF R.R. PLAN SCALE: 3/8" = 1'-0" 1

MARK	FIXTURE[1]	TYPE AT KINDERGARTEN (AGES 3-4)	TYPE AT ELEMENTARY (AGES 5-8)	TYPE AT MIDDLE SCHOOL (AGES 9-12)	TYPE AT HIGH SCHOOL (AGES 13-ADULT)	REMARKS
WC 1 ACC [2]	WALL MOUNT WATER CLOSET	CANNOT USE	CANNOT USE	KOHLER 'KINGSTON' MODEL K-4325 OR EQUAL. LOWEST AT 15" HIGHEST AT 17" A.F.F. TO TOP OF SEAT w/BEMIS 1955SSCT TOILET SEAT OR EQUAL	KOHLER 'KINGSTON' MODEL K-4325 OR EQUAL. LOWEST AT 17" A.F.F. 19" HIGHEST TO TOP OF SEAT w/BEMIS 1955SSCT TOILET SEAT OR EQUAL	FLUSH VALVE ZURN MODEL Z6000AV-HET - 1.28 G.P.F OR EQUAL. LOCATE AS SPECIFIED ON FLOOR PLANS. MOUNT ACCESSIBLE FIXTURES PER SCHEDULE 10/P2.0.
WC 2	FLOOR MOUNT TANK TYPE	AMERICAN STANDARD 4019 828 w/BEMIS 1955SSCT OR EQUAL TOILET SET	AMERICAN STANDARD 4019 828 w/2L2050T SEAT (2" THICK) #3128.001 FOR BOWL #4019.228 LEFT TANK #4019.828 RIGHT TANK	KOHLER 'WELLWORTH' MODEL K-3998 OR EQUALw/BEMIS 1955SSCT OR EQUAL TOILET SEAT	KOHLER 'WELLWORTH' MODEL K-3999 OR EQUAL w/BEMIS 1955SSCT OR EQUAL TOILET SEAT	WC/2 FIXTURE MAX FLOW RATE OF 1.28 G.P.F - LOCATE AS SPECIFIED ON FLOOR PLANS. MOUNT ACCESSIBLE FIXTURES PER SCHEDULE 10/P2.0
WC 3 ACC OPTIONAL	FLOOR MOUNT FLUSH VALVE	KOHLER 'PRIMARY' MODEL K-96064 OR EQUAL. w/BEMIS 1955SSCT TOILET SEAT OR EQUAL	KOHLER 'PRIMARY' MODEL K-96064 OR EQUAL w/2L205T (2" THICK) TOILET SEAT OR EQUAL	FLOOR MOUNT FLUSH VALVE TYPE KOHLER 'WELLCOMME ULTRA' MODEL K-96053 OR EQUAL w/BEMIS 1955SSCT OR EQUAL TOILET SEAT	FLOOR MOUNT FLUSH VALVE TYPE KOHLER 'HIGHCLIFF ULTRA' MODEL K-96057 OR EQUAL w/BEMIS 1955SSCT OR EQUAL TOILET SEAT	FLUSH VALVE ZURN MODEL ZER6000AV-HET-CPM 1.28 G.P.F OR EQUAL. LOCATE AS SPECIFIED ON FLOOR PLANS. MOUNT ACCESSIBLE FIXTURES PER SCHEDULE 10/P2.0.
L 1	BOYS/GIRLS LAVATORY	KOHLER 'KINGSTON' MODEL K-2007-0				BOY/GIRL RESTROOM - ZURN MODEL Z86100-XL-3M - COLD WATER ONLY - SINGLE SPOUT MOUNT AS SPECIFIED IN FLOOR PLANS. MOUNT ACCESSIBLE FIXTURES PER SCHEDULE 10/P2.0 - FLOW RATE OF 0.5 G.P.M. METER FAUCETS SHALL REMAIN OPEN FOR 10 SECONDS MIN.
L 2	ADULT LAVATORY	KOHLER 'KINGSTON' MODEL K-2005-0				ADULT RESTROOM - ZURN MODEL Z86500-XL-3M OR EQUAL HOT/COLD WATER - 4" ON CENTER HOLE. MOUNT AS SPECIFIED IN FLOOR PLANS. MOUNT ACCESSIBLE FIXTURES PER SCHEDULE 10/P2.0 - FLOW RATE OF 0.5 G.P.M.
UR 1 ACC	URINAL	WALL MOUNT TYPE KOHLER MODEL DEXTER K-5452-ET-0 OR EQUAL FLOW RATE = 0.125 gpf				FLUSH VALVE ZURN MODEL Z6003-AV (0.125gpf) OR EQUAL. MOUNT AS SPECIFIED IN FLOOR PLANS. MOUNT ACCESSIBLE FIXTURES PER SCHEDULE 10/P2.0
M 1	MIRROR	WALL MOUNT TYPE BOBRICK MODEL B165 18X30 OR EQUAL				MOUNT AS SPECIFIED IN FLOOR PLANS. MOUNT ACCESSIBLE MIRROR PER SCHEDULE 10/P2.0
GB 1 / GB 2	36" GRAB BARS / 48" GRAB BARS	WALL MOUNT TYPE MOEN MODEL 8736 & 8748 (1 1/4" CONCEALED SCREW 36"& 48") OR EQUAL				18 GA. 304 STAINLESS STEEL SATIN FINISH MOUNT AS SPECIFIED IN FLOOR PLANS AND PER SCHEDULE 10/P2.0. (STRUCTURAL STRENGTH OF GRAB BARS 250# MIN.)
WH 1	WATER HEATER	RHEEM ELECTRIC WATER HEATER MODEL 30 GAL ELECTRIC PROE30 S2 RH95 B** OR EQUAL 240 VOLT SINGLE PHASE				AVAILABLE IN 6, 10, 20 AND 30 GALLON MODELS (MAX WATER HEATER WEIGHT) PER 2/M1.4A OR 1/P2.0
ITWH 1	INSTANT-TEMP WATER HEATER	CHRONOMITE INSTANT-TEMP WATER HEATER MODEL M20L/240 INSTANT SINGLE PHASE 104°				CHRONOMITE MODEL M20L/208 OR EQUAL SEE DETAIL 7/P2.0
FS 1	CUSTODIAN SINK	FLORESTONE FLOOR SINK MOLDED MOP RECEPTORS MODEL MSR-2424 W/ 3" DRAIN OR EQUAL				ZURN 843-MI-RC OR EQUAL
ULS 1	UTILITY SINK	WALL MOUNT TYPE FLORESTONE FM OR EQUAL				CAITLIN CBK110CP OR EQUAL
FD 1	FLOOR DRAIN	WOOD FLOOR DRAIN SIOUIX CHIEF MODEL MODEL 822-2DNRV OR EQUAL				LOCATE AS SPECIFIED ON FLOOR PLANS. PROVIDE GRATE WITH MAX 1/2" OPENINGS, MEASURED IN BOTH DIRECTIONS
FD 2	FLOOR DRAIN	CONCRETE FLOOR DRAIN ZURN MODEL P415-CC W/ STANDARD GRATE ZURN 33160-002 OR EQUAL				LOCATE AS SPECIFIED ON FLOOR PLANS. (FLOOR DRAIN TO BE USED ON CONCRETE ONLY.) PROVIDE GRATE WITH MAX 1/2" OPENINGS, MEASURED IN BOTH DIRECTIONS
CS 1	CLASSROOM SINK	ELKAY MODEL GE125213-3 OR EQUAL 25"x21-1/4" SINGLE BOWL SINK OR EQUAL				FAUCET - ZURN MODEL Z2871-B4-XL W/WRIST BLADES. LOCATE AS SPECIFIED ON FLOOR PLANS. MOUNT ACCESSIBLE FIXTURES PER SCHEDULE 10/P2.0
DF 1	DRINKING FOUNTAIN	ELKAY MODEL EZH20 VRCTLDDWSK - HI-LO WITH BOTTLE FILLER OR EQUAL WALL MOUNT WATER FOUNTAIN OR EQUAL				
HB 1	HOSE BIBB	STANDARD HOSE BIBB WOODFORD MODEL B75-CH-RECESSED w/COVER OR EQUAL				LOCATE AS SPECIFIED ON FLOOR PLANS.

NOTES:
1. ALL WATER FIXTURES MUST MEET REQUIREMENTS OF CAL-GREEN TITLE 24, PART 11, SECTION 5.303.3 "WATER CONSERVING PLUMBING FIXTURES & FITTINGS".
2. FOR OPTIONAL ACCESSIBLE FLOOR-MOUNT WATER CLOSET, SEE PLUMBING SCHEDULE MARK WC/3 (NOT SHOWN ON PLAN).
3. NOT ALL ITEMS LISTED MAY OCCUR IN THIS PROJECT.
4. THERE SHOULD BE NO SHARP OR ABRASIVE SURFACES UNDER LAVS OR SINKS.
5. REFER TO DETAIL 10/P2.0 FOR SCHEDULE OF ACCESSIBLE HEIGHTS AT FIXTURES.

PLUMBING FIXTURE SCHEDULE

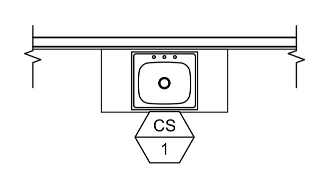

NOTE: REFER TO FLOOR PLAN FOR LOCATIONS.

CLASSROOM SINK PLAN SCALE: 1/4" = 1'-0" 8

A 1 = PLUMBING FIXTURE I.D. - SEE SCHEDULE ABOVE

SYMBOLS LEGEND

PLANS SHALL MEET ENERGY CODE 120.3 FOR PIPE INSULATION. ALL WATER HEATERS SHALL HAVE R7.7 ON HOT AND COLD LINES FOR THE FIRST 8 FEET FROM WATER HEATER (TANK TYPE AND INSTANT). SECTION 609.12 REQUIRES HOT WATER PIPING FROM THE WATER HEATER TO THE FIXTURE (CONTROL VALVE) BE INSULATED TO A MINIMUM WALL THICKNESS OF NOT LESS THAN THE DIAMETER OF THE PIPE FOR A PIPE UP TO 2 INCHES (50 MM) IN DIAMETER. INSULATION WALL THICKNESS SHALL BE NOT LESS THAN 2 INCHES (51 MM) FOR A PIPE OF 2 INCHES (50 MM) OR MORE IN DIAMETER. PER PLUMBING CODE 609.12 UPDATE PLANS TO SHOW HOW THE HOT WATER PIPING IS INSULATED FROM THE WATER HEATER TO THE FIXTURE (CONTROL VALVE) TO A MINIMUM WALL THICKNESS OF NOT LESS THAN THE DIAMETER OF THE PIPE. INSTANTANEOUS WATER HEATERS WITH AN INPUT GREATER THAN 6.8 KBTU/H OR 2 KW (ALL INSTANTANEOUS ARE OVER 4KW) SHALL HAVE ISOLATION VALVES ON BOTH THE INCOMING COLD WATER SUPPLY AND THE HOT WATER PIPE LEAVING THE WATER HEATER, TO ASSIST IN THE FLUSHING OF THE HEAT EXCHANGER AND HELP PROLONG THE LIFE OF THE WATER HEATERS PER ENERGY CODE 110.3(C).

PLUMBING NOTE

MODULAR MFR. TO STUB THROUGH FLOOR ALL PLUMBING LINES. BUILDING PERIMETER POC'S SHOWN ARE FOR COORDINATION PURPOSES ONLY. ALL UNDER-FLOOR CONNECTIONS ARE BY SITE CONTRACTOR, U.O.N.

1. DIMENSIONS ARE TO FACE OF FINISH (F.O.F.) UNLESS NOTED OTHERWISE (i.e. F.O.C., ℄)
2. RESTROOM CONFIGURATION MAY VARY PER BUILDING CONFIGURATION.
3. RESTROOM MODULE OCCURS ONLY AT END OF BUILDING. SINGLE RESTROOMS MAY OCCUR IN ANY PART OF A BUILDING.
4. RESTROOM MODULE CANNOT STAND ALONE AND SHALL BE ASSEMBLED TOGETHER WITH AT LEAST ONE OTHER 12'x40' MODULE.
5. INTERIOR WALLS MAY OCCUR THROUGHOUT BUILDING. REFER TO SHEET S8.1 OR S9.1 FOR ATTACHMENTS.
6. REFER TO SCHEDULE 10/P2.0 FOR ACCESSIBLE HEIGHTS AT TOILETS.
7. REFER TO DETAILS 1, 3, 4 & 5, SHEET A7.1 FOR TOILET PARTITION ANCHORAGE BLOCKING.
8. SEWER AND WATER STUB OUTS SHALL BE LOCATED WITHIN THE ALLOWABLE AREA AS SHOWN ON FLOOR PLAN AND CONNECTIONS SHALL BE EASILY ACCESSIBLE FOR FUTURE RELOCATION. STUB OUT HEIGHT SHALL BE COORDINATED BY THE MANUFACTURER.
9. PIPING MATERIAL
   a. WATER: COPPER TYPE "L", 95/5 SOLDER.
   b. WASTE DRAIN AND VENT: ABS.
10. REFER TO SHEET M1.0 FOR TYPICAL BRACING AND ANCHORAGE NOTES.

GENERAL NOTES

IDENTIFICATION STAMP
DIV. OF THE STATE ARCHITECT
APP: 03-124589 INC:
REVIEWED FOR
SS ☑ FLS ☑ ACS ☑
DATE: 04/15/2025

AMS®
American Modular Systems
787 Spreckels Ave., Manteca, CA 95336
Phone (209) 825-1921 Fax (209) 825-7018
www.americanmodular.com

INTELLECTUAL-PROPERTY & PROPRIETARY RIGHTS STATEMENT
COPYRIGHT © AMERICAN MODULAR SYSTEMS (AMS)
AMS OWNS ALL COPYRIGHT AND OTHER INTELLECTUAL-PROPERTY AND PROPRIETARY RIGHTS IN THESE DRAWINGS, SPECIFICATIONS, AND THE MATERIAL CONTAINED HEREIN. CERTAIN ELEMENTS SHOWN IN THESE DOCUMENTS ARE REGISTERED TRADEMARKS OF AMS. ALL PATENTABLE MATERIALS CONTAINED IN THESE DOCUMENTS AND ORIGINATING WITH AMS WILL REMAIN THE SOLE PROPERTY OF AMS. THESE DRAWING, SPECIFICATIONS, AND THE MATERIAL CONTAINED HEREIN MAY NOT BE REPRODUCED, TRANSMITTED, COPIED, DISTRIBUTED, MODIFIED, OR OTHERWISE DISPOSED OF (DIRECTLY OR INDIRECTLY) AND MAY NOT BE USED (IN WHOLE OR IN PART) TO ASSIST IN THE CONSTRUCTION, DESIGN, OR OTHER MAKING OF, OR FOR THE PURPOSE OF FURNISHING ANY INFORMATION FOR THE CONSTRUCTION, DESIGN, OR OTHER MAKING OF, ANY BUILDINGS (MODULAR OR OTHERWISE), DRAWINGS, SPECIFICATIONS, PRINTS, APPARATUS, OR PARTS THEREOF, EXCEPT AS EXPRESSLY PERMITTED BY WRITTEN CONSENT OF, OR IN A WRITTEN AGREEMENT WITH, AMS. SUBMITTAL OR DISTRIBUTION TO MEET OFFICIAL REGULATORY REQUIREMENTS WILL NOT BE CONSTRUED AS PUBLICATION IN DEROGATION OF AMS'S COPYRIGHT OR OTHER INTELLECTUAL-PROPERTY OR PROPRIETARY RIGHTS.

PRE-CHECKED SET NAME
72' x 40' BUILDING
STANDARD MODULAR BUILDING
(HIGH SEISMIC)
FORM®

SITE SPECIFIC PROJECT NAME
VENTURA COLLEGE
(1) 72'x40' BUILDING

MANUFACTURER PROFESSIONAL OF RECORD
LICENSED ARCHITECT RANDALL PATRICK CAVANAGH No. C12631 Ren. 3-31-25 STATE OF CALIFORNIA

REVISIONS
1
2
3
4

DRAWN BY:	AA
SCALE:	AS NOTED
DATE:	03/05/25
PROJECT NO:	1895-24

SHEET TITLE:
RESTROOM OPTIONS
PLUMBING PLAN
& FIXTURE SCHEDULE

SHEET NUMBER:
P1.0-M

American Modular Systems

VENTURA COLLEGE STEM
(1) 72' x 40' BUILDING (HIGH SEISMIC)

APPLICABLE CODES

PARTIAL LIST OF APPLICABLE CODES AS OF JANUARY 1, 2023

- 2022 CALIFORNIA ADMINISTRATIVE CODE (CAC) - PART 1, TITLE 24, CCR)
- 2022 CALIFORNIA BUILDING CODE (CBC), VOLUME 1 & 2 - (PART 2, TITLE 24 CCR) BASED ON THE 2021 INTERNATIONAL BUILDING CODE WITH 2022 CALIFORNIA AMENDMENTS
- 2022 CALIFORNIA ELECTRICAL CODE (CEC) - (PART 3, TITLE 24, CCR) BASED ON THE 2020 NATIONAL ELECTRIC CODE WITH 2022 CALIFORNIA AMENDMENTS
- 2022 CALIFORNIA MECHANICAL CODE (CMC) - (PART 4, TITLE 24, CCR) BASED ON THE 2021 IAPMO UNIFORM MECHANICAL CODE WITH 2022 CALIFORNIA AMENDMENTS
- 2022 CALIFORNIA PLUMBING CODE (CPC) - (PART 5, TITLE 24, CCR) BASED ON THE 2021 IAPMO UNIFORM PLUMBING CODE WITH 2022 CALIFORNIA AMENDMENTS
- 2022 CALIFORNIA ENERGY CODE (CEC) - (PART 6, TITLE 24, CCR)
- 2022 CALIFORNIA FIRE CODE (CFC) - (PART 9, TITLE 24, CCR) BASED ON THE 2021 INTERNATIONAL FIRE CODE WITH 2022 CALIFORNIA AMENDMENTS
- 2022 CALIFORNIA GREEN BUILDING CODE (CGC) - (PART 11, TITLE 24, CCR)
- 2022 CALIFORNIA REFERENCED STANDARDS CODE (PART 12, TITLE 24, CCR)
-

PARTIAL LIST OF APPLICABLE STANDARDS

NFPA 13	AUTOMATIC SPRINKLER SYSTEM	2022 EDITION
NFPA 14	STANDPIPE AND HOSE SYSTEMS	2019 EDITION
NFPA 17	DRY CHEMICAL EXTINGUISHING SYSTEMS	2021 EDITION
NFPA 17A	WET CHEMICAL EXTINGUISHING SYSTEMS	2021 EDITION
NFPA 20	STATIONARY PUMPS	2019 EDITION
NFPA 24	PRIVATE FIRE MAINS	2019 EDITION
NFPA 72	NATIONAL FIRE ALARM AND SIGNALING CODE (CALIFORNIA AMENDED) (NOTE: SEE UL STANDARD 1971 FOR "VISUAL DEVICES")	2022 EDITION
NFPA 253	CRITICAL RADIANT FLUX OF FLOOR COVERING SYSTEMS	2019 EDITION
NFPA 2001	CLEAN AGENT FIRE EXTINGUISHING SYSTEMS (CA AMMENDED)	2018 EDITION

GENERAL NOTES

1. SUBSTITUTION OF PRODUCTS OR PROCESSES WHICH CHANGE THE STRUCTURAL SAFETY, FIRE & LIFE-SAFETY, OR ACCESSIBILTY OF THIS BUILDING SHALL BE SUBMITTED TO THE DSA AS AN ADDENDUM OR CONSTRUCTION CHANGE DOCUMENT.
2. PC BUILDING APPROVED ONLY FOR OCCUPANCY "E" OR "B". (FOR "B" OCCUPANCY "OFFICE" USE, A MIN OF 12GA FLOOR JOISTS SHALL BE USED - REFER TO TABLE A IN SHEET S3.0).
3. PC BUILDING EXITING IS BASED ON THE USE OR OCCUPANCY AND WILL BE REVIEWED AS SITE SPECIFIC.
4. PC BUILDINGS LOCATED IN FIRE HAZARD SEVERITY ZONES PER WILDLAND URBAN INTERFACE FIRE AREAS (WUI) SHALL CONFORM TO CBC CHAPTER 7A.
5. AUTOMATIC SPRINKLER SYSTEMS MIGHT BE REQUIRED FOR SITE SPECIFIC PROJECTS. OPTIONAL AUTOMATIC FIRE SPRINKLER DESIGNS ARE INCLUDED IN THIS PC APPROVAL. (NOTE: SEE BUILDING DATA THIS SHEET FOR FIRE SPRINKLER SYSTEM WEIGHT INCLUDED IN BUILDING DESIGN)
6. FIRE SERVICE UNDERGROUND SHALL BE REVIEWED AS A SITE SPECIFIC APPLICATION. WATER SUPPLY SHALL BE DESIGNED TO MEET THE PC SPRINKLER DEMAND REQUIREMENTS.
7. PROVIDE A SITE SPECIFIC FIRE FLOW LETTER OF CERTIFICATION FROM AN APPROVED WATER PURVEYOR OR LOCAL FIRE AUTHORITY.
8. THIS PC PLAN SHALL NOT BE USED TO HOUSE "ROOMS OR AREAS WITH SPECIAL HAZARDS" SUCH AS LABORATORIES, VOCATIONAL SHOPS AND OTHER SUCH AREAS NOT CLASSIFIED AS GROUP H, LOCATED IN GROUP E OCCUPANCIES.
9. A SEPARATE NON-PC DSA APPLICATION NUMBER (SITE SPECIFIC JOB OR STOCKPILE) IS REQUIRED FOR DESIGN & ROOF-TOP INSTALLATION OF SOLAR PANEL SYSTEMS. ITS ANCHORAGE & SUPPORT STRUCTURE ABOVE THE ROOF FRAMING. THE PC ROOF FRAMING IS DESIGNED FOR SOLAR PANELS TO BE INSTALLED FLAT ON THE ROOF. (NOTE: SEE BUILDING DATA THIS SHEET FOR SOLAR PANEL SYSTEM WEIGHT & WIND LOAD INCLUDED IN BUILDING DESIGN FOR ROOF-TOP.) SUBMITTALS OF ROOF-TOP SOLAR SYSTEM SHALL NOT BE SUBMITTED AS AN OVER-THE-COUNTER SUBMITTAL.
10. IF THE STRUCTURE IS LOCATED IN AN AREA WITH LIQUEFIABLE SOIL OR SITE CLASS F, OVER-THE-COUNTER SUBMITTAL IS NOT ALLOWED AND SITE SPECIFIC PROJECT SUBMITTAL IS REQUIRED. IF THE SITE IS NOT IN A MAPPED LIQUIEFACTION HAZARD ZONE, IT MAY BE PRESUMED THAT NO LIQUEFACTION HAZARD EXISTS ON THAT SITE UNLESS A SITE-SPECIFIC GEOTECHNICAL REPORT IDENTIFIES SUCH HAZARD.
11. THIS PC BUILDING IS NOT DESIGNED FOR FLOOD HAZARD AREAS. WHEN A SITE-SPECIFIC PROJECT IS LOCATED IN A FLOOD ZONE OTHER THAN ZONE X, A LETTER STAMPED AND SIGNED FROM A GEOTHECHNICAL ENGINEER IS NEEDED TO VALIDATE THAT THE ALLOWABLE SOIL VALUES SPECIFIED IN THE PC DRAWINGS ARE STILL APPLICABLE. UNLESS THE BOTTOMS OF FOUNDATIONS ARE RAISED ABOVE THE DESIGN FLOOD ELEVATION, A VALIDATION LETTER FROM THE GEOTHECNICAL ENGINEER SHALL BE PROVIDED, EVEN IF THE PRESUMPTIVE LOAD-BEARING VALUES PER CBC SECTION 1806A.2 ARE USED. PROJECT SHALL BE EXEMPT FROM THE VALIDATION LETTER FOR PROJECTS LOCATED IN ZONE D (UNDEFINED) IF THE APPLICANT PROVIDES EVIDENCE FROM THE LOCAL JURISDICTION OR A QUALIFIED DESIGN PROFESSIONAL CONFIRMING THAT THE SITE IS NOT IN A FLOOD HAZARD ZONE. LOCATION OF ELECTRICAL ELEMENTS SHALL CONFORM TO THE AMERICAN SOCIETY OF CIVIL ENGINEERS.
12. THE PLACEMENT OF THE PC BUILDING(S) ON OR ADJACENT TO SLOPES SHALL COMPLY WITH THE 'FOUNDATION CLEARANCES FROM SLOPES' SPECIFICATIONS FOUND ON SHEET N2.0 OF THESE DRAWINGS.
13. PC BUILDING SHALL NOT BE PLACED OR BE RELOCATED IN AREAS HAVING A NOISE CONTOUR GREATER THAN OR EQUAL TO 65 CNEL, OR IN AREAS EXPOSED TO A NOISE LEVEL OF 65 dB L_{eq}-1-hr DURING ANY HOUR OF OPERATION WHEN NOISE CONTOURS ARE NOT READILY AVAILABLE, AS SPECIFIED IN CALGREEN CODE, SECTION 5.507.4.1 & 5.507.4.1.1.
14. THIS PC BUILDING IS NOT DESIGNED FOR SNOW LOADS.
15. THIS PC BUILDING IS NOT DESIGNED FOR ICE LOADS.
16. BUILDING SHALL BE MANUFACTURED IN COMPLIANCE WITH CFC CHAPTER 33 FOR FIRE SAFETY DURING CONSTRUCTION.
17. SUBMITTAL AND APPROVAL OF A GEOHAZARD REPORT BY THE CALIFORNIA GEOLOGICAL SURVEY (CGS) IS NOT REQUIRED FOR SINGLE-STORY MODULAR BUILDINGS PROVIDED THAT THEY DO NOT EXCEED 4,000 SQUARE FEET IN PLAN AREA AND ARE NOT LOCATED WITHIN STATE OR LOCAL GEOLOGICAL HAZARD ZONES IN ACCORDANCE WITH IR A-4, SECTION 3.2.1.
18. ACCEPTANCE TESTS BE COMPLETED ON NEWLY INSTALLED OR REPLACEMENT OF LIGHTING CONTROLS, MECHANICAL SYSTEMS, FENESTRATION, AND PROCESS EQUIPMENT BEFORE PROJECT COMPLETION PER THE CALIFORNIA ENERGY CODE SECTION 10-103. ACCEPTANCE TESTS MUST BE PERFORMED BY A CERTIFIED ACCEPTANCE TEST TECHNICIAN (ATT). THE ACCEPTANCE TESTING PROCEDURES MUST BE REPEATED, AND DEFICIENCIES CORRECTED UNTIL THE INSTALLATION OF THE SPECIFIED SYSTEMS CONFORM AND PASS THE REQUIRED ACCEPTANCE CRITERIA. COMPLETED NRCA FORMS SHALL BE SUBMITTED TO THE PROJECT INSPECTOR AND THE DISTRICT.
19. THIS PC WILL NOT BE PLACED ON ANY CAMPUS IN AND OF THE FOLLOWING LOCATIONS: WITHIN THE 65 CNEL NOISE CONTOUR OF AN AIRPORT. WITHIN THE 65 CNEL OR LDN NOISE CONTOUR OF A FREEWAY, EXPRESSWAY, RAILROAD OR INDUSTRIAL SOURCE GUIDEWAY. WHERE EXPOSED TO NOISE LEVELS OF 65 DB LEQ-1-HOUR DURING ANY HOUR OF OPERATION.

© 2023 BY AMERICAN MODULAR SYSTEMS, INC.

ALL OF THE DRAWINGS AND DETAILS CONTAINED IN THIS PACKAGE ARE THE INTELLECTUAL PROPERTY OF AMS AND MAY NOT BE USED FOR CONSTRUCTION OR DESIGN BY ANOTHER ENTITY WITHOUT THE EXPRESS WRITTEN PERMISSION OF AMS.

COPYRIGHT: © 2023 BY AMERICAN MODULAR SYSTEMS, INC. ALL RIGHTS RESERVED. NO PART OF THIS DOCUMENT MAY BE REPRODUCED OR TRANSMITTED IN ANY FORM OR BY ANY MEANS, ELECTRONIC, MECHANICAL, PHOTOCOPYING, RECORDING, OR OTHERWISE, WITHOUT THE PRIOR WRITTEN PERMISSION OF AMERICAN MODULAR SYSTEMS, INC. CERTAIN ELEMENTS CONTAINED IN THESE DOCUMENTS ARE REGISTERED TRADEMARKS. ALL PATENTABLE MATERIALS CONTAINED IN THESE DOCUMENTS AND ORIGINATING WITH AMERICAN MODULAR SYSTEMS, INC. SHALL REMAIN THE SOLE PROPERTY OF AMERICAN MODULAR SYSTEMS, INC. SUBMITTAL OR DISTRIBUTION TO MEET OFFICIAL REGULATORY REQUIREMENTS WILL NOT BE CONSTRUED AS PUBLICATION IN DEROGATION OF AMERICAN MODULAR SYSTEM, INC.'S COPYRIGHT OR OTHER RESERVED INTELLECTUAL PROPERTY RIGHTS AND INTERESTS.

BUILDING DATA

OCCUPANCY	E OR *B (CLASSROOM USE FOR COLLEGE)
TYPE OF CONSTRUCTION	V-B (CATEGORY I & II)
WIND LOAD ASCE 7-16 SECTION28.5.3 SIMPLIFIED PROCEDURE	V = 120 MPH BASIC WIND SPEED EXPOSURE = C INTERNAL PRESSURE COEFF., GC_{pi} = ±0.18 ROOF ANGLE = 1.2 DEGREES RISK CATEGORY II K_{ZT} = 1.00
ICE LOAD	NOT CONSIDERED (SEE GENERAL NOTE #15 THIS SHEET)
SNOW LOAD	NOT CONSIDERED (SEE GENERAL NOTE #14 THIS SHEET)
ROOF LIVE LOAD (MAX PSF)	20 (REDUCIBLE)
FLOOR LIVE LOAD (PSF)	☐ 50 ☒ 50+15 ☐ 100 ☐ 150 (NON-STORAGE)
DESIGN DEAD LOADS (MAX PSF)	21.0 RF - 48.0 CONC. FLR - 18.0 EXT WALLS
FIRE SPRINKLER SYSTEM DESIGN WT.	1.5 PSF INCLUDED IN ROOF DESIGN DEAD LOADS ABOVE (SEE GENERAL NOTES #5 - #7 THIS SHEET)
ROOF SOLAR PANEL SYSTEM DESIGN WT.	3.0 PSF INCLUDED IN ROOF DESIGN DEAD LOADS ABOVE (SEE GENERAL NOTE #9 THIS SHEET)
ALLOWABLE SOIL PRESSURE (PSF)	1500 (1/3 INCREASE IN SOIL BEARING CAPACITY NOT PERMITTED FOR WIND & SEISMIC LOAD COMBINATIONS UNLESS USING ALTERNATE BASIC LOAD COMBINATIONS PER CBC 1605A.3.2)
FLOOD HAZARD AREA	NO (SEE GENERAL NOTE #11 THIS SHEET)
RAIN INTENSITY (IN/HR)	3" MAX.
BUILDING AREA (SQ. FT.)	2,880
CLIMATE ZONE GROUP	☐ A (1,16) ☐ B (2-5) ☒ C (6-13) ☐ D (14,15) (REFER TO EN.1 FOR REQUIREMENTS)
MODULES	LIGHT MODULAR STEEL MOMENT-FRAMES PER CBC SECION 2212A
SYSTEM	12'x40' MODULES (2 MODULES MINIMUM)
FOUNDATION TYPE	CONCRETE

SITE-SPECIFIC OPTIONS

FLOOR DECK	☐ 1⅛" PLYWOOD SHTG.	☐ BH-36 DECK 1½"x18 GA.	☒ 3WxH DECK 3"x18 GA.
WALL STUDS	☒ WOOD	☒ LIGHT-GAUGE STEEL @ INTERIOR STC WALL ONLY)	
EXTERIOR WALL FINISH	☐ STUCCO	☒ SYNTHETIC STUCCO	☒ LAP SIDING
HVAC (SEE M1.7A FOR HVAC TYPES)	☒ INTERIOR FLOOR MOUNTED	☐ EXTERIOR WALL MOUNTED	☒ SPLIT SYSTEM ☐ ROOF MOUNTED
ROOFING	☒ 3" x 20 GA. STANDING SEAM	☐ 3" x 22 GA. STANDING SEAM (INSTALLED OVER SHEATHING)	☐ BUILT-UP ROOFING ☐ SINGLE PLY ROOFING
ROOF PITCH	☒ SINGLE PITCH	☐ DUAL PITCH	
ROOF DIAPHRAGM	☐ STEEL STRAP CROSS BRACING - SEE SHEET S4.0	☒ ½" SHEATHING - SEE SHEET S4.1	
FRONT OVERHANG	☐ NO	☒ YES - LENGTH: 7'-0"	ENCLOSED - 7'-0" MAX
REAR OVERHANG	☐ NO	☒ YES - LENGTH: 2'-9"	ENCLOSED - 7'-0" MAX
SOLATUBE ON ROOF	☒ NO	☐ YES	
FIRE SPRINKLERS	☒ NO	☐ YES (SEE GENERAL NOTES #5 - #7 THIS SHEET)	
SOLAR PANELS	☒ NO	☐ YES (SEE GENERAL NOTE #9 THIS SHEET)	
OPTIONAL SIDE WALL CANOPY	☒ NO	☐ YES (SEE SHEET S5.4A)	
LIQUEFIABLE SOILS	☒ NO	☐ YES (SEE GENERAL NOTE #10 THIS SHEET)	
MAPPED GEOHAZARD ZONE	☒ NO	☐ YES (AS DEFINED BY PC-6 SECTION 1.8)	
GEOHAZARD REPORT	☒ NO	☐ YES	
IF YES	GEOTECHNICAL FIRM:		
	REPORT #:		REPORT DATE:
GEOTECHNICAL REPORT*	☐ NO	☒ YES	* REQUIRED IF BUILDING AREA > 4,000 SF
IF YES	GEOTECHNICAL FIRM: GEOTECHNIQUES		
	REPORT #: 1003.056		REPORT DATE: 07/31/24
	DEEPER FOOTINGS REQUIRED?	☐ NO	☒ YES - REQUIRED DEPTH: 15"
	WIDER FOOTINGS REQUIRED?	☒ NO	☐ YES - REQUIRED WIDTH:
BELOW GRADE CONCRETE MIX DESIGN	☐ DEFAULT CONCRETE MIX DESIGN FOR BELOW GRADE CONCRETE PER SHEET N1.0A.		
	☒ OPTIONAL SITE-SPECIFIC CONCRETE MIX DESIGN FOR BELOW GRADE CONCRETE PER SHEET N1.0A.		

☐ THIS SHEET CONTAINS DESIGN OPTION BOXES AVAILABLE FOR SELECTION BASED ON SITE SPECIFIC REQUIREMENTS.

SEE SHEET TS2 FOR SHEET INDEX

SITE SPECIFIC WIND VALUES

SITE SPECIFIC BASIC WIND SPEED = 93 MPH WIND EXPOSURE = C

SITE SPECIFIC SEISMIC VALUES

SITE SPECIFIC S_S = 1.993 SITE SPECIFIC S_1 = 0.749 SITE CLASS = D

(NOTE: SITE SHALL BE SITE CLASS "D" DEFAULT IF NO SOILS REPORT.)

PC BUILDING SEISMIC DESIGN CRITERIA

I_e = 1.0 T = 0.240_S R = 3.5 (OMF) RISK CATEGORY II
Ω_0 = 3.0 C_d = 3.0 ρ = 1.0 SEISMIC DESIGN CATEGORY: D (S_1 < 0.75) E (S_1 ≥ 0.75)

MAXIMUM STORY DRIFT RATIO = 2.0% (I.E. MAX DRIFT = 0.020 x THE HEIGHT UNDER CONSIDERATION.)
LATERAL FORCE RESISTING SYSTEM: LIGHT MODULAR STEEL MOMENT FRAMES PER 2212A
ANALYSIS PROCEDURE: EQUIVALENT LATERAL FORCE

NOTE:
COMPONENTS AND CLADDING DESIGNED FOR: S_{DS} = 1.95

☐ **NO SOILS REPORT - ASSUMED SITE CLASS "D" DEFAULT**

S_S = 2.440 MAX (SITE) 1.708 (DESIGN)* F_a= 1.2 S_{DS} = 1.95 (SITE) 1.37 (DESIGN)*
S_1 = 1.213 MAX (SITE & DESIGN) F_v= 1.7 S_{D1} = 1.37 MAX (SITE & DESIGN) C_S = 0.393 W (DESIGN)*

☒ **WITH SOILS REPORT - SITE CLASS "A", "B" OR "D"**

NOTE: GROUND MOTION HAZARD ANALYSIS IS NOT REQUIRED WHERE THE VALUE OF THE PARAMETERS S IS INCREASED BY 50% FOR ALL APPLICATIONS OF SM1 (ASCE 7-16 w/SUPPLEMENT #3, SECTION 11.4.8, EXCEPTION 1)
DESIGN BASED ON SITE CLASS DETERMINED PER CHAPTER 20 OF ASCE 7-16

S_S = 2.928 MAX (SITE) 2.050 (DESIGN)* F_a= 1.0 S_{DS} = 1.95 MAX (SITE) 1.37 (DESIGN)*
S_1 = 1.213 MAX (SITE & DESIGN) F_v= 1.7 S_{D1} = 1.37 MAX (SITE & DESIGN) C_S = 0.393 W (DESIGN)*

☐ **WITH SOILS REPORT - SITE CLASS "C"**

DESIGN BASED ON SITE CLASS DETERMINED PER CHAPTER 20 OF ASCE 7-16

S_S = 2.440 MAX (SITE) 1.708 (DESIGN)* F_a= 1.2 S_{DS} = 1.95 (SITE) 1.37 (DESIGN)*
S_1 = 1.473 MAX (SITE & DESIGN) F_v= 1.4 S_{D1} = 1.37 MAX (SITE & DESIGN) C_S = 0.393 W (DESIGN)*

☐ **WITH SOILS REPORT - SITE CLASS "E"**

NOTE: GROUND MOTION HAZARD ANALYSIS IS NOT REQUIRED WHERE THE EQUIVALENT LATERAL FORCE PROCEDURE IS USED FOR DESIGN AND THE VALUE OF C_S IS DETERMINED BY EQ (12.8-2) FOR ALL VALUES OF *T* (ASCE 7-16 w/SUPPLEMENT #3, SECTION 11.4.8, EXCEPTION 2) SEE GENERAL NOTE #10. DESIGN BASED ON SITE CLASS DETERMINED PER CHAPTER 20 OF ASCE 7-16

S_S = 1.718 MAX (SITE) 1.718 (DESIGN) F_a= 1.2 S_{DS} = 1.37 (SITE) 1.37 (DESIGN)
S_1 = 1.031 MAX (SITE & DESIGN) F_v= 2.0 S_{D1} = 1.37 MAX (SITE & DESIGN) C_S = 0.393 W (DESIGN)

☐ **WITH SOILS REPORT - SITE CLASS "F"**

PER ASCE 7-16 SECTION 11.4.8, A SITE REPONSE ANALYSIS IN ACCORDANCE WITH SECTION 21.1 IS REQUIRED UNLESS EXEMPTED BY SECTION 20.3.1. SEE GENERAL NOTE #10.

SITE SPECIFIC S_{DS} = _____
SITE SPECIFIC S_{D1} = _____ S_{DS} = S_{D1} = 1.37 MAX C_S = 0.393 W (DESIGN)

*PER ASCE 7-16, SECTION 12.8.1.3:
THE VALUE OF C_S AND E_v ARE PERMITTED TO BE CALCULATED USING A VALUE OF S_{DS} EQUAL TO 1.0, BUT NOT LESS THAN 70% OF S_{DS} AS DEFINED IN SECTION 11.4.5, PROVIDED THAT ALL OF THE FOLLOWING CRITERIA ARE MET:

1. STRUCTURE DOES NOT HAVE IRREGULARITIES;
2. STRUCTURE DOES NOT EXCEED FIVE (5) STORIES ABOVE THE LOWER OF THE BASE OR GRADE PLANE;
3. STRUCTURE HAS A FUNDAMENTAL PERIOD, T, THAT DOES NOT EXCEED 0.5 SECONDS;
4. STRUCTURE MEETS REQUIREMENTS FOR REDUNDANCY FACTOR, ρ, TO BE TAKEN AS 1.0;
5. SITE SOIL PROPERTIES ARE NOT CLASSIFIED AS SITE CLASS 'E' OR 'F';
6. STRUCTURE IS CLASSIFIED AS RISK CATEGORY II.
7. WHEN SITE SPECIFIC GROUND MOTION PROCEDURE IS REQUIRED PER 11.4.8, SITE-SPECIFIC PROJECTS ARE NOT ALLOWED FOR OTC SUBMITTAL.

PV SYSTEM REQUIREMENT TABLE

REQUIRED PV SYSTEM SIZE (kW)

CLIMATE ZONE	BUILDING SIZE: ☐ 24'x40'	☐ 36'x40'	☐ 48'x40'	☐ 60'x40'	☒ 72'x40'	☐ 84'x40'	☐ 96'x40'	☐ 108'x40'	☐ 120'x40'
	APPROXIMATE CONDITIONED FLOOR AREA								
	960	1440	1920	2400	2880	3360	3840	4320	4800
☐ 1 & 16	NONE	NONE	NONE	NONE	NONE	3.9	0.2	NONE	NONE
☐ 2 - 5	NONE	NONE	NONE	NONE	NONE	1.0	NONE	NONE	NONE
☒ 6 - 13	NONE	NONE	NONE	NONE	3.2	NONE	NONE	NONE	NONE
☐ 14	NONE	NONE	1.5	3.4	3.6	2.1	3.6	1.5	4.6
☐ 15	NONE	NONE	2.2	5.2	5.4	3.2	5.4	2.2	7.0

NOTES:
1. FOR SITE-SPECIFIC PROJECT, INDICATE BUILDING SIZE AND PV SYSTEM SIZE. IF PV REQUIRED, SEE NOTE #9 UNDER GENERAL NOTES
2. NO OTC APPROVAL FOR SITE-SPECIFIC PROJECT THAT REQUIRES SOLAR PANEL INSTALLATION

IDENTIFICATION STAMP
DIV. OF THE STATE ARCHITECT
APP: 03-124589 INC:
REVIEWED FOR
SS ☑ FLS ☑ ACS ☑
DATE: 04/15/2025

American Modular Systems
787 Spreckels Ave., Manteca, CA 95336
Phone (209) 825-1921 Fax (209) 825-7018
www.americanmodular.com

INTELLECTUAL-PROPERTY & PROPRIETARY RIGHTS STATEMENT
COPYRIGHT © AMERICAN MODULAR SYSTEMS (AMS)
AMS OWNS ALL COPYRIGHT AND OTHER INTELLECTUAL-PROPERTY AND PROPRIETARY RIGHTS IN THESE DRAWINGS, SPECIFICATIONS, AND THE MATERIAL CONTAINED HEREIN. CERTAIN ELEMENTS SHOWN IN THESE DOCUMENTS ARE REGISTERED TRADEMARKS OF AMS. ALL PATENTABLE MATERIALS CONTAINED IN THESE DOCUMENTS AND ORIGINATING WITH AMS WILL REMAIN THE SOLE PROPERTY OF AMS. THESE DRAWING, SPECIFICATIONS AND THE MATERIAL CONTAINED HEREIN MAY NOT BE REPRODUCED, TRANSMITTED, COPIED, DISTRIBUTED, MODIFIED, OR OTHERWISE DISPOSED OF (DIRECTLY OR INDIRECTLY) AND MAY NOT BE USED (IN WHOLE OR IN PART) TO ASSIST IN THE CONSTRUCTION, DESIGN, OR OTHER MAKING OF, OR FOR THE PURPOSE OF FURNISHING ANY INFORMATION FOR THE CONSTRUCTION, DESIGN, OR OTHER MAKING OF, ANY BUILDINGS (MODULAR OR OTHERWISE), DRAWINGS, SPECIFICATIONS, PRINTS, APPARATUS, OR PARTS THEREOF, EXCEPT AS EXPRESSLY PERMITTED BY WRITTEN CONSENT OF, OR IN A WRITTEN AGREEMENT WITH, AMS. SUBMITTAL OR DISTRIBUTION TO MEET OFFICIAL REGULATORY REQUIREMENTS WILL NOT BE CONSTRUED AS PUBLICATION IN DEROGATION OF AMS'S COPYRIGHT OR OTHER INTELLECTUAL-PROPERTY OR PROPRIETARY RIGHTS.

PRE-CHECKED SET NAME
72' x 40' BUILDING
STANDARD MODULAR BUILDING
(HIGH SEISMIC)
FORM®

SITE SPECIFIC PROJECT NAME
VENTURA COLLEGE
(1) 72'x40' BUILDING

APPROVED
DIV. OF THE STATE ARCHITECT
APP: 04-122051 PC
REVIEWED FOR
SS ☑ FLS ☑ ACS ☒ CG ☑
DATE: 04/03/2024

☒ 2022 CBC PRE-CHECK (PC) DOCUMENT
A SEPARATE PRE-CHECK APPLICATION CONSTRUCTION IS REQUIRED

MANUFACTURER PROFESSIONAL OF RECORD

LICENSED ARCHITECT PATRICK CHANG No. C12631 Rem. 3-31-25 STATE OF CALIFORNIA

THESE DRAWINGS ARE PRELIMINARY AND NOT FOR CONSTRUCTION UNLESS STAMPED & SIGNED BY THE DESIGN PROFESSIONAL OF RECORD.

REVISIONS
1
2
3
4

DRAWN BY:	AA
SCALE:	AS NOTED
DATE:	12/30/24
PROJECT NO:	1895-24

SHEET TITLE:
TITLE SHEET

SHEET NUMBER:
TS

American Modular Systems

24' x 40' THRU 120' x 40'
STANDARD BUILDING (HIGH SEISMIC)

SHEET INDEX

ARCHITECTURAL

OPTIONS		SHEET NUMBER	SHEET TITLE
COVER SHEET		☒ TS	TITLE SHEET
		☒ TS-2	SHEET INDEX
INSPECTION FORM		☒ D1	FORM DSA-103
		☒ D2	FORM DSA-103
GENERAL NOTES & SPECIFICATIONS		☒ N1.0	GENERAL NOTES & SPECIFICATIONS
		☒ N1.0A	BELOW GRADE CONCRETE MIX DESIGN REQUIREMENTS
		☒ N2.0	GENERAL NOTES & SPECIFICATIONS
		☒ N3.0	TYPICAL SCHEDULES: DOORS, WINDOWS & FINISHES
		☒ N4.0	ACCESSIBILITY STANDARDS AND DETAILS
		☒ N5.0	MULTIPLE FLOOR PLAN CONFIGURATIONS
		☐ N5.1	MULTIPLE FLOOR PLAN CONFIGURATIONS
ENERGY SHEETS & CALCULATIONS		☒ EN.1A-EN.1C	ENERGY CALCULATIONS - SUMMATION SHEETS
		☐ EN.2-EN.3	ENERGY CALCULATIONS - 24'x40' BUILDING - GROUP A
		☐ EN.4-EN.5	ENERGY CALCULATIONS - 24'x40' BUILDING - GROUP B
		☐ EN.6-EN.7	ENERGY CALCULATIONS - 24'x40' BUILDING - GROUP C
		☐ EN.8-EN.9	ENERGY CALCULATIONS - 24'x40' BUILDING - GROUP D
		☐ EN.10-EN.11	ENERGY CALCULATIONS - 36'x40' BUILDING - GROUP A
		☐ EN.12-EN.13	ENERGY CALCULATIONS - 36'x40' BUILDING - GROUP B
		☐ EN.14-EN.15	ENERGY CALCULATIONS - 36'x40' BUILDING - GROUP C
		☐ EN.16-EN.17	ENERGY CALCULATIONS - 36'x40' BUILDING - GROUP D
		☐ EN.18-EN.19	ENERGY CALCULATIONS - 48'x40' BUILDING - GROUP A
		☐ EN.20-EN.21	ENERGY CALCULATIONS - 48'x40' BUILDING - GROUP B
		☐ EN.22-EN.23	ENERGY CALCULATIONS - 48'x40' BUILDING - GROUP C
		☐ EN.24-EN.26	ENERGY CALCULATIONS - 48'x40' BUILDING - GROUP D
		☐ EN.27-EN.28	ENERGY CALCULATIONS - 60'x40' BUILDING - GROUP A
		☐ EN.29-EN.30	ENERGY CALCULATIONS - 60'x40' BUILDING - GROUP B
		☐ EN.31-EN.32	ENERGY CALCULATIONS - 60'x40' BUILDING - GROUP C
		☐ EN.33-EN.35	ENERGY CALCULATIONS - 60'x40' BUILDING - GROUP D
		☐ EN.36-EN.37	ENERGY CALCULATIONS - 72'x40' BUILDING - GROUP A
		☐ EN.38-EN.39	ENERGY CALCULATIONS - 72'x40' BUILDING - GROUP B
		☒ EN.40-EN.42	ENERGY CALCULATIONS - 72'x40' BUILDING - GROUP C
		☐ EN.43-EN.45	ENERGY CALCULATIONS - 72'x40' BUILDING - GROUP D
		☐ EN.46-EN.48	ENERGY CALCULATIONS - 84'x40' BUILDING - GROUP A
		☐ EN.49-EN.51	ENERGY CALCULATIONS - 84'x40' BUILDING - GROUP B
		☐ EN.52-EN.54	ENERGY CALCULATIONS - 84'x40' BUILDING - GROUP C
		☐ EN.55-EN.57	ENERGY CALCULATIONS - 84'x40' BUILDING - GROUP D
		☐ EN.58-EN.60	ENERGY CALCULATIONS - 96'x40' BUILDING - GROUP A
		☐ EN.61-EN.63	ENERGY CALCULATIONS - 96'x40' BUILDING - GROUP B
		☐ EN.64-EN.66	ENERGY CALCULATIONS - 96'x40' BUILDING - GROUP C
		☐ EN.67-EN.69	ENERGY CALCULATIONS - 96'x40' BUILDING - GROUP D
		☐ EN.70-EN.72	ENERGY CALCULATIONS - 108'x40' BUILDING - GROUP A
		☐ EN.73-EN.75	ENERGY CALCULATIONS - 108'x40' BUILDING - GROUP B
		☐ EN.76-EN.78	ENERGY CALCULATIONS - 108'x40' BUILDING - GROUP C
		☐ EN.79-EN.81	ENERGY CALCULATIONS - 108'x40' BUILDING - GROUP D
		☐ EN.82-EN.84	ENERGY CALCULATIONS - 120'x40' BUILDING - GROUP A
		☐ EN.85-EN.87	ENERGY CALCULATIONS - 120'x40' BUILDING - GROUP B
		☐ EN.88-EN.90	ENERGY CALCULATIONS - 120'x40' BUILDING - GROUP C
		☐ EN.91-EN.93	ENERGY CALCULATIONS - 120'x40' BUILDING - GROUP D
		☒ EN.94-EN.97	ENERGY CALCULATIONS - SUPPLEMENTAL SHEETS
FLOOR PLANS		☒ A1.0	TYPICAL FLOOR PLAN
		☐ A1.1	TYPICAL FLOOR PLAN w/ SOLATUBE OPTION
		☒ A1.2	RESTROOM FLOOR PLAN OPTIONS - AGE RANGE: 13-ADULT
		☐ A1.3	RESTROOM FLOOR PLAN OPTIONS - AGE RANGE: 9-12
		☐ A1.4	RESTROOM FLOOR PLAN OPTIONS - AGE RANGE: 5-8
		☐ A1.5	RESTROOM FLOOR PLAN OPTIONS - AGE RANGE: 3-4
ROOF PLAN & DETAILS	METAL STANDING SEAM	☒ A2.0	TYPICAL ROOF PLAN - METAL STANDING SEAM (WITHOUT PARAPETS)
		☐ A2.1	TYPICAL ROOF PLAN - METAL STANDING SEAM (WITH PARAPETS)
		☒ A2.2	TYPICAL ROOF DETAILS - METAL STANDING SEAM
	SINGLE-PLY OR BUILT-UP	☐ A2.3	TYPICAL ROOF PLAN - SINGLE-PLY OR BUILT-UP (WITHOUT PARAPETS)
		☐ A2.4	TYPICAL ROOF PLAN - SINGLE-PLY OR BUILT-UP (WITH PARAPETS)
		☐ A2.5	TYPICAL ROOF DETAILS - SINGLE-PLY OR BUILT-UP ROOFING

ARCHITECTURAL (CONTINUATION)

OPTIONS		SHEET NUMBER	SHEET TITLE
INTERIOR ELEVATIONS		☒ A4.0	INTERIOR ELEVATIONS - TYPICAL CLASSROOM
		☒ A4.1	INTERIOR ELEVATIONS - RESTROOM OPTIONS
		☐ A4.2	INTERIOR ELEVATIONS - RESTROOM OPTIONS - ALT. TOILET TYPES
EXTERIOR ELEVATIONS & ARCHITECTURAL DETAILS	STUCCO	☐ A5.2	TYPICAL EXTERIOR ELEVATIONS - STUCCO OPTION
		☐ A5.3	TYPICAL ARCHITECTURAL DETAILS - STUCCO OPTION
		☐ A5.3A	DETERIORATION DETAILS GREATER THAN 2160 SQ. FT. - STUCCO OPTION
	LAP SIDING	☐ A5.4	TYPICAL EXTERIOR ELEVATIONS - LAP SIDING OPTION
		☒ A5.5	TYPICAL ARCHITECTURAL DETAILS - LAP SIDING OPTION
		☒ A5.5A	DETERIORATION DETAILS GREATER THAN 2160 SQ. FT. - LAP SIDING OPTION
	SYNTHETIC STUCCO	☒ A5.6	TYPICAL EXTERIOR ELEVATIONS - SYNTHETIC STUCCO OPTION
		☒ A5.7	TYPICAL ARCHITECTURAL DETAILS - SYNTHETIC STUCCO OPTION
		☒ A5.7A	DETERIORATION DETAILS GREATER THAN 2160 SQ. FT. - SYNTHETIC STUCCO OPTION
MISCELLANEOUS DETAILS		☐ A7.0	ARCHITECTURAL EXTERIOR FINISH OPTIONS DETAILS
		☒ A7.1	MISCELLANEOUS ARCHITECTURAL DETAILS
		☒ A7.3	TYPICAL LONGITUDINAL AND TRANSVERSE FRAME SECTIONS
		☐ A8.0	1-HR FIRE RATED CONSTRUCTION DETAILS

STRUCTURAL

OPTIONS		SHEET NUMBER	SHEET TITLE
STEEL MEMBER PROPERTIES		☒ S0.0	STEEL MEMBER PROPERTIES
FOUNDATION PLANS & DETAILS	CONCRETE	☐ S1.0	CONCRETE FOUNDATION PLAN (50 PSF MAX FLOOR LIVE LOAD)
		☒ S1.1	CONCRETE FOUNDATION PLAN (50 PSF LIVE LOAD +15 PSF PARTITION LOAD)
		☐ S1.2	CONCRETE FOUNDATION PLAN (100 PSF MAX FLOOR LIVE LOAD)
		☐ S1.3	CONCRETE FOUNDATION PLAN (150 PSF MAX FLOOR LIVE LOAD)
		☒ S1.4	CONCRETE FOUNDATION DETAILS
		☒ S1.5	CONCRETE FOUNDATION DETAILS
		☐ S1.6A	STANDARD ANCHORAGE FOUNDATION DETAILS
		☒ S1.6B	UPGRADED ANCHORAGE FOUNDATION DETAILS
		☒ S1.7	CONCRETE FOUNDATION OPTIONAL UTILITY OPENINGS IN FOOTINGS
FLOOR FRAMING PLAN & DETAILS	PLYWOOD	☐ S3.0	FLOOR FRAMING PLAN & DETAILS FOR PLYWOOD FLOOR
	CONCRETE w/ METAL DECK	☐ S3.1	FLOOR FRAMING PLAN & DETAILS FOR CONCRETE FLOOR w/BH-DECK OPTION (100 PSF MAX FLOOR L.L.)
		☒ S3.3	FLOOR FRAMING PLAN & DETAILS FOR CONCRETE FLOOR w/3WxH-DECK OPTION (150 PSF MAX FLOOR L.L.)
ROOF FRAMING PLANS & DETAILS		☐ S4.0	ROOF FRAMING PLAN & DETAILS - CROSS BRACING OPTION
		☒ S4.1	ROOF FRAMING PLAN & DETAILS - ROOF SHEATHING OPTION
		☐ S4.2	ROOF FRAMING DETAILS - CROSS BRACING OPTION
		☒ S4.3	ROOF FRAMING DETAILS - ROOF SHEATHING OPTION
		☐ S4.4	OPTIONAL PARAPET FRAMING ELEVATIONS & DETAILS
BUILDING FRAMING ELEVATIONS & DETAILS		☒ S5.0	MOMENT FRAME ELEVATIONS & DETAILS
		☒ S5.1	MOMENT FRAME CONNECTION DETAILS
		☐ S5.4A	OPTIONAL SIDE WALL CANOPY PLAN & DETAILS
WALL FRAMING	WOOD STUDS	☒ S8.0	WALL FRAMING ELEVATIONS & SCHEDULES - WOOD STUDS
		☒ S8.1	WALL FRAMING DETAILS - WOOD STUDS
	METAL STUDS	☒ S9.0	WALL FRAMING ELEVATIONS & SCHEDULES - METAL STUD OPTION
		☒ S9.1	WALL FRAMING DETAILS - METAL STUD OPTION
		☒ S9.2	TYPICAL METAL STUD FRAMING DETAILS & PROPERTIES

MECHANICAL

OPTIONS	SHEET NUMBER	SHEET TITLE
FLOOR PLANS	☒ M1.0	TYPICAL REFLECTED CEILING PLAN
	☒ M1.1A	TYPICAL MECHANICAL PLAN OPTIONS
	☐ M1.1B	TYPICAL MECHANICAL PLAN OPTIONS
	☐ M1.1C	TYPICAL MECHANICAL PLAN OPTIONS
	☐ M1.3	RESTROOM REFLECTED CEILING PLANS & OPTIONS
DETAILS	☒ M1.4	MECHANICAL & CEILING DETAILS
	☒ M1.4A	MECHANICAL & CEILING DETAILS
	☒ M1.5	MECHANICAL & CEILING DETAILS
	☒ M1.5A	MECHANICAL & CEILING DETAILS
	☒ M1.6	MECHANICAL ROOF DETAILS
	☐ M1.6A	MECHANICAL ROOF DETAILS
MISCELLANEOUS	☒ M1.7	CEILING NOTES, SPECIFICATIONS AND MINUMUM INSULATION SCHEDULES
	☒ M1.7A	MECHANICAL NOTES & SCHEDULES

ELECTRICAL

OPTIONS	SHEET NUMBER	SHEET TITLE
FLOOR PLANS & DETAILS	☒ E1.0	TYPICAL ELECTRICAL PLAN
	☐ E1.1	RESTROOM OPTIONS ELECTRICAL PLANS
	☒ E1.2	ELECTRICAL NOTES & DETAILS

PLUMBING

OPTIONS	SHEET NUMBER	SHEET TITLE
FLOOR PLAN & DETAILS	☒ P1.0	RESTROOM OPTIONS, PLUMBING PLAN, & FIXTURE SCHEDULE
	☒ P2.0	PLUMBING DETAILS & ACCESSIBLE DETAILS
	☒ P3.0	PLUMBING ISOMETRIC DRAWINGS

FIRE SPRINKLERS

OPTIONS	SHEET NUMBER	SHEET TITLE
FLOOR PLAN & DETAILS	☐ FS-1	OPTIONAL FIRE SPRINKLER TYP. NOTES & DETAILS
	☐ FS-2	OPTIONAL FIRE SPRINKLER TYPICAL PLANS

IDENTIFICATION STAMP
DIV. OF THE STATE ARCHITECT
APP: 03-124589 INC:
REVIEWED FOR
SS ☑ FLS ☑ ACS ☑
DATE: 04/15/2025

American Modular Systems
787 Spreckels Ave., Manteca, CA 95336
Phone (209) 825-1921 Fax (209) 825-7018
www.americanmodular.com

INTELLECTUAL-PROPERTY & PROPRIETARY RIGHTS STATEMENT
COPYRIGHT © AMERICAN MODULAR SYSTEMS (AMS)
AMS OWNS ALL COPYRIGHT AND OTHER INTELLECTUAL-PROPERTY AND PROPRIETARY RIGHTS IN THESE DRAWINGS, SPECIFICATIONS, AND THE MATERIAL CONTAINED HEREIN. CERTAIN ELEMENTS SHOWN IN THESE DOCUMENTS ARE REGISTERED TRADEMARKS OF AMS. ALL PATENTABLE MATERIALS CONTAINED IN THESE DOCUMENTS AND ORIGINATING WITH AMS WILL REMAIN THE SOLE PROPERTY OF AMS. THESE DRAWING, SPECIFICATIONS, AND THE MATERIAL CONTAINED HEREIN MAY NOT BE REPRODUCED, TRANSMITTED, COPIED, DISTRIBUTED, MODIFIED, OR OTHERWISE DISPOSED OF (DIRECTLY OR INDIRECTLY) AND MAY NOT BE USED (IN WHOLE OR IN PART) TO ASSIST IN THE CONSTRUCTION, DESIGN, OR OTHER MAKING OF, OR FOR THE PURPOSE OF FURNISHING ANY INFORMATION FOR THE CONSTRUCTION, DESIGN, OR OTHER MAKING OF, ANY BUILDINGS (MODULAR OR OTHERWISE), DRAWINGS, SPECIFICATIONS, PRINTS, APPARATUS, OR PARTS THEREOF, EXCEPT AS EXPRESSLY PERMITTED BY WRITTEN CONSENT OF, OR IN A WRITTEN AGREEMENT WITH, AMS. SUBMITTAL OR DISTRIBUTION TO MEET OFFICIAL REGULATORY REQUIREMENTS WILL NOT BE CONSTRUED AS PUBLICATION IN DEROGATION OF AMS'S COPYRIGHT OR OTHER INTELLECTUAL-PROPERTY OR PROPRIETARY RIGHTS.

PRE-CHECKED SET NAME
24' x 40' THRU 120' x 40'
STANDARD MODULAR BUILDING
(HIGH SEISMIC)
FORM

SITE SPECIFIC PROJECT NAME
VENTURA COLLEGE
(1) 72'x40' BUILDING

APPROVED
DIV. OF THE STATE ARCHITECT
APP: 04-122051 PC
REVIEWED FOR
SS ☑ FLS ☑ ACS ☑ CG ☑
DATE: 04/03/2024

☒ 2022 CBC PRE-CHECK (PC) DOCUMENT
A SEPARATE PROJECT APPLICATION FOR CONSTRUCTION IS REQUIRED.

MANUFACTURER PROFESSIONAL OF RECORD ON PC
LICENSED ARCHITECT
RANDALL PATRICK CAVANAGH
No. C12631
Ren. 3-31-25
STATE OF CALIFORNIA

THESE DRAWINGS ARE PRELIMINARY AND NOT FOR CONSTRUCTION UNLESS STAMPED & SIGNED BY THE DESIGN PROFESSIONAL OF RECORD.

REVISIONS
1
2
3
4

DRAWN BY:	AA
SCALE:	AS NOTED
DATE:	MM/DD/YY
PROJECT NO:	XXXX-22

SHEET TITLE:
SHEET INDEX

SHEET NUMBER:
TS-2

AUTHORIZED USE: ALL INFORMATION INCLUDED ON THIS SHEET (FORM DSA-103) IS FOR THE SOLE PURPOSE OF RECEIVING DSA APPROVAL AND ISSUANCE OF A PC NUMBER. NO OTHER USE IS AUTHORIZED WITHOUT THE EXPRESS WRITTEN CONSENT OF AMERICAN MODULAR SYSTEMS, INC.

Additional Information for PC designs only, not to be added to DSA-103:

	STOCKPILE	CONSTRUCTION OF PERMANENT MODULAR OR RELOCATABLE BUILDING	RELOCATION OF CERTIFIED RELOCATABLE BUILDING
INSPECTOR CLASS (minimum requirements)	RBIP or Class 1	In Plant: RBIP or Class 1 Site: Class 4 for Single Story	Class 4 for Single Story
Selection of the Project Inspector and Testing/Special Inspection Agency	by the Owner (not manufacturer) and approved by DSA, A/E of Record and Structural Engineer	by the School District and approved by DSA and A/E responsible for in-plant construction observation.	by the Owner (not manufacturer) and approved by DSA, A/E of Record and Structural Engineer
Cost of the Project Inspector (CAC, Section 4-333(b)) and Testing/Special Inspection Agency (CAC, Section 4-335(b))	by the Owner (not manufacturer)	by the School District	

NOTES: NOTE 1: REINFORCING STEEL TESTS MAY BE WAIVED FOR ONE-STORY BUILDINGS, PER CBC, SECTION 1910A.2 (1909.2.4*).
NOTE 2: REQUIRED ONLY WHERE THE DETAILS OF THE PC SPECIFY THE USE OF THIS TYPE OF ANCHOR.
NOTE 3: REQUIRED ONLY WHERE THE DETAILS OF THE PC SPECIFY THIS WELDING.
NOTE 4: THESE TESTS AND INSPECTIONS ARE APPLICABLE ONLY WHEN A GEOTECHNICAL REPORT IS REQUIRED.
NOTE 5: WOOD FOUNDATIONS ARE NOT PERMITTED FOR PERMANENT MODULAR BUILDINGS PER CBC SECTION 1807A.1.4.

*INDICATES ALTERNATIVE CBC SECTIONS THAT COMMUNITY COLLEGES MAY USE PER CBC SECTION 1.9.2.2.

HOLLO-BOLT MANUFACTURER'S INSPECTION PROCEDURES

PERIODIC SPECIAL INSPECTION REQUIREMENTS

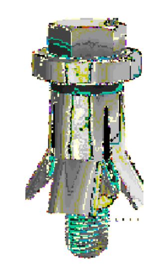

TO VERIFY CORRECT INSTALLATION INCLUDING USE IN SEISMIC OR WIND LOADING APPLICATIONS IN ACCORDANCE WITH THE 2022 CALIFORNIA BUILDING CODE SECTIONS 1705A.1, 1705A.2, AND 1704A.3 PLEASE REFER TO THE FOLLOWING INSTRUCTIONS.

A. INSPECTION PRIOR TO INSTALLATION

1. ENSURE THAT THERE ARE NO GAPS BETWEEN THE CONNECTING STEELWORK.
2. ENSURE THAT THE HOLES ARE ALIGNED AND THAT THE HOLES HAVE THE CORRECT DIAMETER AND SPACING FOR THE CHOSEN HOLLO-BOLT.
3. THE HOLES MUST BE STANDARD DIAMETER HOLES CONFORMING TO AISC 360 WHERE THE HOLE DIAMETER MUST BE NO GREATER THAN THE SLEEVE OUTER DIAMETER +1/16".
4. BURRS IN THE HOLES MUST BE REMOVED BEFORE INSERTION OF THE HOLLO-BOLT.

B. INSPECTION DURING INSTALLATION

1. ENSURE THAT THE HOLLO-BOLTS ARE INSTALLED AS PER LINDAPTER'S INSTALLATION INSTRUCTION SHEET.
2. ENSURE THAT THE TORQUE WRENCH(S) HAS A CURRENT VALID CALIBRATION CERTIFICATE AND IS CALIBRATED ON REGULAR BASIS.
3. IF USING AIR POWERED WRENCHES TO TIGHTEN THE HOLLO-BOLT, CHECK THAT THE WRENCH IS SET CORRECTLY TO AVOID OVERTIGHTING. THE FINAL TORQUE MUST BE CHECKED WITH A CALIBRATED TORQUE WRENCH.
4. IF AFTER TIGHTENING THERE IS A GAP EVIDENT BETWEEN THE HOLLO-BOLT AND THE CONTACT SURFACE OF THE CONNECTING ELEMENT THIS MAY INDICATE INCORRECT INSTALLATION. REMOVE AND DISCARD THE HOLLO-BOLT, REALIGN THE CONNECTING STEELWORK AND INSTALL A NEW HOLLO-BOLT AS PER LINDAPTER'S INSTALLATION INSTRUCTION SHEET.
5. IF AFTER TIGHTENING THE BOLT HEAD CONTINUES TO TURN THIS MAY BE AN INDICATION OF OVER TIGHTENING, OR IF USING A STAINLESS STEEL HOLLO-BOLT THIS MAY BE DUE TO GALLING*, REMOVE AND DISCARD THE HOLLO-BOLT AND INSTALL A NEW HOLLO-BOLT AS PER LINDAPTER'S INSTALLATION INSTRUCTION SHEET.

* 'GALLING' IS A TERM USED WHEN TWO SURFACES SEIZE UP AS A RESULT OF COLD WELDING AND IS COMMON WHEN TIGHTENING STAINLESS STEEL BOLTS.

C. INSPECTION AFTER INSTALLATION

1. ENSURE THAT THERE ARE NO GAPS BETWEEN THE CONNECTING STEELWORK.
2. ENSURE THAT THERE ARE NO GAPS BETWEEN THE HOLLO-BOLT AND THE CONTACT SURFACE OF THE CONNECTING ELEMENT.
3. CHECK THE TIGHTENING TORQUE OF BETWEEN 5-10% OF THE INSTALLED HOLLO-BOLTS CHOSEN AT RANDOM USING A CALIBRATED TORQUE WRENCH.

FOOTNOTES

1. WAIVER OF CONTINUOUS BATCH PLANT INSPECTION (PER CBC 1705A3.3.1 AND DSA IR 17-13)
   A. CONTINUOUS BATCH PLANT INSPECTION MAY BE WAIVED IF THE CONCRETE PLANT COMPLIES FULLY WITH ASTM C94, SECTION 9 AND 10, AND HAS A CURRENT CERTIFICATION FROM THE "NATIONAL READY MIXED CONCRETE ASSOCIATION" OR ANOTHER AGENCY ACCEPTABLE TO THE ENFORCEMENT AGENCY. THE CERTIFICATION SHALL INDICATE THAT THE PLANT HAS AUTOMATIC BATCHING AND RECORDING CAPABILITIES.
   B. IF THE BATCH PLANT INSPECTION IS WAIVED, THE FOLLOWING REQUIREMENTS a) THRU c) SHALL BE MET:
      a) AN APPROVED AGENCY OR CERTIFIED TECHNICIAN OF THE TESTING LABORATORY SHALL CHECK THE FIRST BATCH AT START OF WORK DAY TO VERIFY MATERIALS AND PROPORTIONS CONFORM TO THE APPROVED MIX DESIGN.
      b) THE LICENSED WEIGHMASTER SHALL POSITIVELY IDENTIFY QUANTITY OF MATERIALS AND CERTIFY EACH LOAD BY A BATCH TICKET.
      c) BATCH TICKETS, INCLUDING MATERIAL QUANTITIES AND WEIGHTS, SHALL BE TRANSMITTED TO THE INSPECTOR OF RECORD PRIOR TO CONCRETE PLACEMENT.
2. ELIMINATION OF CONTINUOUS BATCH PLANT INSPECTION (PER CBC 1705A3.3.2):
   A. BATCH PLANT INSPECTION IS NOT REQUIRED FOR ANY OF THE FOLLOWING CONDITIONS:
      a) SITE FLATWORK,
      b) UNENCLOSED SITE STRUCTURES, INCLUDING BUT NOT LIMITED TO LUNCH OR CAR SHELTERS, BLEACHERS, SOLAR STRUCTURES, FLAG OR LIGHT POLES, OR RETAINING WALLS,
      c) CONTROLLED LOW-STRENGTH MATERIAL BACKFILL, OR
      d) SINGLE STORY RELOCATABLE BUILDINGS LESS THAN 2,160 SQUARE FEET.
3. PER CBC 1910A.2, TESTING OF REINFORCING MAY BE WAIVED FOR ONE-STORY BUILDINGS IF A CERTIFIED MILL TEST REPORT IS PROVIDED.
4. REQUIRED ONLY WHERE DETAILS SPECIFY THE USE OF POST-INSTALLED CONCRETE ANCHORS.
5. NOT USED
6. THE APPENDIX TO DSA-103 SHALL BE COMPLETED BY THE DESIGN PROFESSIONAL IN GENERAL RESPONSIBLE CHARGE.
7. ULTRASONIC TESTING PER DSA IR-PC2 SECTION 10.1 SHALL BE PERFORMED ON 100% OF CJP GROOVE WELDS WHEN THE COLUMNS PER SCHEDULE ON SHEET S5.1 HAVE A THICKNESS OF $^5/_{16}$" OR GREATER. MAGNETIC PARTICLE TESTING SHALL BE PERFORMED ON 25% OF ALL BEAM-TO-COLUMN CJP GROOVE WELDS. NONDESTRUCTIVE TESTING OF COMPLETE JOINT PENETRATION WELDS AT GRAVITY CONNECTIONS SHALL COMPLY WITH AISC 360, CHAPTER N, PER 2022 CBC 1705A.2.1.
8. EXAMPLE DSA-103 FORMS WILL BE USED AS GUIDE TO DEVELOP A SITE-SPECIFIC DSA-103 FORM FOR THE SITE-SPECIFIC PROJECT. EXAMPLE FORMS ON THE PC DRAWINGS WILL BE CROSSED OUT WHEN SITE-SPECIFIC DSA-103 FORMS ARE PROVIDED DURING OTC REVIEW.
9. QUALIFIED REPRESENTATIVE OF LABORATORY OF RECORD OR APPROVED SPECIAL INSPECTOR SHALL VERIFY ALL STEEL IDENTIFICATION PER 2022 CBC 2202A.1 AND DSA IR 17-3 STRUCTURAL WELDING INSPECTION.

72' x 40' BUILDING FLOOR PLAN

DSA 103-22: LISTING OF STRUCTURAL TESTS & SPECIAL INSPECTIONS, 2022 CBC

Application Number: 04-122050 | **School Name:** PC | **School District:** PC
DSA File Number: | **Increment Number:** | **Date Created:** 2023-11-01 14:38:17

2022 CBC

IMPORTANT: This form is only a summary list of structural tests and some of the special inspections required for the project. Generally, the structural tests and special inspections noted on this form are those that will be performed by the Geotechnical Engineer of Record, Laboratory of Record, or Special Inspector. The actual complete test and inspection program must be performed as detailed on the DSA approved documents. The appendix at the bottom of this form identifies work NOT subject to DSA requirements for special inspection or structural testing. The project inspector is responsible for providing inspection of all facets of construction, including but not limited to, special inspections not listed on this form such as structural wood framing, high-load wood diaphragms, cold-formed steel framing, anchorage of non-structural components, etc., per Title 24, Part 2, Chapter 17A (2022 CBC).

****NOTE:** Undefined section and table references found in this document are from the CBC, or California Building Code.

KEY TO COLUMNS

1. TYPE	2. PERFORMED BY
Continuous – Indicates that a continuous special inspection is required **Periodic** – Indicates that a periodic special inspection is required **Test** – Indicates that a test is required	**GE (Geotechnical Engineer)** – Indicates that the special inspection shall be performed by a registered geotechnical engineer or his or her authorized representative. **LOR (Laboratory of Record)** – Indicates that the test or special inspection shall be performed by a testing laboratory accepted in the DSA Laboratory Evaluation and Acceptance (LEA) Program. See CAC Section 4-335. **PI (Project Inspector)** – Indicates that the special inspection may be performed by a project inspector when specifically approved by DSA. **SI (Special Inspection)** – Indicates that the special inspection shall be performed by an appropriately qualified/approved special inspector.

	Test or Special Inspection	Type	Performed By	Code References and Notes
	S/A1. STRUCTURAL STEEL, COLD-FORMED STEEL AND ALUMINUM USED FOR STRUCTURAL PURPOSES			
	Test or Special Inspection	**Type**	**Performed By**	**Code References and Notes**
☑	**a.** Verify identification of all materials and: • Mill certificates indicate material properties that comply with requirements. • Material sizes, types and grades comply with requirements.	**Periodic**	*	**Table 1705A.2.1 Item 3a–3c.** 2202A.1; AISI S100-20 Section A3.1 & A3.2, AISI S240-20 Section A3 & A5, AISI S220-20 Sections A4 & A6. * By special inspector or qualified technician when performed off-site.
☑	**b.** Test unidentified materials	**Test**	**LOR**	**2202A.1.**
☑	**c.** Examine seam welds of HSS shapes	**Periodic**	**SI**	DSA IR 17-3.
☑	**d.** Verify and document steel fabrication per DSA-approved construction documents.	**Periodic**	**SI**	Not applicable to cold-formed steel light-frame construction, except for trusses (**1705A.2.4**).
	S/A3. WELDING:			
	Test or Special Inspection	**Type**	**Performed By**	**Code References and Notes**
☑	**a.** Verify weld filler material identification markings per AWS designation listed on the DSA-approved documents and the WPS.	**Periodic**	**SI**	**1705A.2.5, Table 1705A.2.1 Items 4 & 5;** AWS D1.1 and AWS D1.8 for structural steel; AWS D1.2 for Aluminum; AWS D1.3 for cold-formed steel; AWS D1.4 for reinforcing steel; DSA IR 17-3.
☑	**b.** Verify weld filler material manufacturer's certificate of compliance.	**Periodic**	**SI**	DSA IR 17-3.
☑	**c.** Verify WPS, welder qualifications and equipment.	**Periodic**	**SI**	DSA IR 17-3.
	S/A4. SHOP WELDING (IN ADDITION TO SECTION S/A3):			
	Test or Special Inspection	**Type**	**Performed By**	**Code References and Notes**
☑	**a.** Inspect groove welds, multi-pass fillet welds, single pass fillet welds > 5/16", plug and slot welds.	**Continuous**	**SI**	**Table 1705A.2.1 Items 5a.1–4;** AISC 360-16 (and AISC 341-16 as applicable); DSA IR 17-3.
☑	**b.** Inspect single-pass fillet welds ≤ 5/16", floor and roof deck welds.	**Periodic**	**SI**	**1705A.2.2, Table 1705A.2.1 Items 5a.5 & 5a.6;** AISC 360-16 (and AISC 341-16 as applicable); DSA IR 17-3.
	Test or Special Inspection	**Type**	**Performed By**	**Code References and Notes**
	S/A6. NONDESTRUCTIVE TESTING:			
	Test or Special Inspection	**Type**	**Performed By**	**Code References and Notes**
☑	**a.** Ultrasonic	**Test**	**LOR**	**1705A.2.1, 1705A.2.5;** AISC 341-16 J6.2, AISC 360-16 N5.5; AWS D1.1, AWS D1.8; DSA IR 17-2.
☑	**b.** Magnetic Particle	**Test**	**LOR**	**1705A.2.1, 1705A.2.5;** AISC 341-16 J6.2, AISC 360-16 N5.5; AWS D1.1, AWS D1.8; DSA IR 17-2.
	S/A11. Other Steel			
	Test or Special Inspection	**Type**	**Performed By**	**Code References and Notes**
☑	**a.** Shop Welding - Inspect welding of cold-formed steel Periodic/Special Inspector	Periodic	SI	
☑	b. Hollow bolts	Periodic	LOR	test per manufacturer's inspection procedures

1. Structural Testing and Inspection: Laboratory Verified Report Form DSA 291
2. Shop Welding Inspection: Laboratory Verified Report Form DSA 291, or, for independently contracting SI, Special Inspection Verified Report Form DSA 292

Appendix: Work Exempt from DSA Requirements for Structural Tests / Special Inspections

	CONCRETE/MASONRY:
☑	5. Testing of reinforcing bars is not required for items given in CBC Section 1910A.2 subject to the requirements and limitations in that section.
	WELDING:
☑	3. Non-structural interior cold-formed steel framing spanning less than 15'-0", such as in interior partitions, interior soffits, etc. supporting only self weight and light-weight finishes or adhered tile, masonry, stone, or terra cotta veneer no more than 5/8" thickness and apex less than 20'-0" in height and not over an exit way. Maximum tributary load to a member shall not exceed the equivalent of that occurring from a 10'x10' opening in a 15' tall wall for a header or king stud.
☑	4. Manufactured support frames and curbs using hot rolled or cold-formed steel (i.e., light gauge) for mechanical, electrical, or plumbing equipment weighing less than 2000# (equipment only) (connections of such frames to superstructure elements using welding will require special inspection as noted in selected item(s) for Sections S/A3, S/A4 and/or S/A5 of listing above).
☑	5. Manufactured components (e.g., Tolco, B-Line, Afcon, etc.) for mechanical, electrical, or plumbing hanger support and bracing (connections of such components to superstructure elements using welding will require special inspection as noted in selected item(s) for Sections S/A3, S/A4 and/or S/A5 of listing above).
☑	7. Any support for exempt non-structural components given in CBC Section 1617A.1.18 (which replaces ASCE 7-16, Section 13.1.4) meeting the following: A) when supported on a floor/roof, <400# and resulting composite center of mass (including component's center of mass) ≤4' above supporting floor/roof, B) when hung from a wall or roof/floor, <20# for discrete units or <5 plf for distributed systems.

☐ STOCKPILE WOOD FLOOR

DSA 103-22: LISTING OF STRUCTURAL TESTS & SPECIAL INSPECTIONS, 2022 CBC

Application Number: 04-122050 | **School Name:** PC | **School District:** PC
DSA File Number: | **Increment Number:** | **Date Created:** 2023-11-01 14:47:08

2022 CBC

IMPORTANT: This form is only a summary list of structural tests and some of the special inspections required for the project. Generally, the structural tests and special inspections noted on this form are those that will be performed by the Geotechnical Engineer of Record, Laboratory of Record, or Special Inspector. The actual complete test and inspection program must be performed as detailed on the DSA approved documents. The appendix at the bottom of this form identifies work NOT subject to DSA requirements for special inspection or structural testing. The project inspector is responsible for providing inspection of all facets of construction, including but not limited to, special inspections not listed on this form such as structural wood framing, high-load wood diaphragms, cold-formed steel framing, anchorage of non-structural components, etc., per Title 24, Part 2, Chapter 17A (2022 CBC).

****NOTE:** Undefined section and table references found in this document are from the CBC, or California Building Code.

KEY TO COLUMNS

1. TYPE	2. PERFORMED BY
Continuous – Indicates that a continuous special inspection is required **Periodic** – Indicates that a periodic special inspection is required **Test** – Indicates that a test is required	**GE (Geotechnical Engineer)** – Indicates that the special inspection shall be performed by a registered geotechnical engineer or his or her authorized representative. **LOR (Laboratory of Record)** – Indicates that the test or special inspection shall be performed by a testing laboratory accepted in the DSA Laboratory Evaluation and Acceptance (LEA) Program. See CAC Section 4-335. **PI (Project Inspector)** – Indicates that the special inspection may be performed by a project inspector when specifically approved by DSA. **SI (Special Inspection)** – Indicates that the special inspection shall be performed by an appropriately qualified/approved special inspector.

	Test or Special Inspection	Type	Performed By	Code References and Notes
	S/A1. STRUCTURAL STEEL, COLD-FORMED STEEL AND ALUMINUM USED FOR STRUCTURAL PURPOSES			
	Test or Special Inspection	**Type**	**Performed By**	**Code References and Notes**
☑	**a.** Verify identification of all materials and: • Mill certificates indicate material properties that comply with requirements. • Material sizes, types and grades comply with requirements.	**Periodic**	*	**Table 1705A.2.1 Item 3a–3c.** 2202A.1; AISI S100-20 Section A3.1 & A3.2, AISI S240-20 Section A3 & A5, AISI S220-20 Sections A4 & A6. * By special inspector or qualified technician when performed off-site.
☑	**b.** Test unidentified materials	**Test**	**LOR**	**2202A.1.**
☑	**d.** Verify and document steel fabrication per DSA-approved construction documents.	**Periodic**	**SI**	Not applicable to cold-formed steel light-frame construction, except for trusses (**1705A.2.4**).
	S/A3. WELDING:			
	Test or Special Inspection	**Type**	**Performed By**	**Code References and Notes**
☑	**a.** Verify weld filler material identification markings per AWS designation listed on the DSA-approved documents and the WPS.	**Periodic**	**SI**	**1705A.2.5, Table 1705A.2.1 Items 4 & 5;** AWS D1.1 and AWS D1.8 for structural steel; AWS D1.2 for Aluminum; AWS D1.3 for cold-formed steel; AWS D1.4 for reinforcing steel; DSA IR 17-3.
☑	**b.** Verify weld filler material manufacturer's certificate of compliance.	**Periodic**	**SI**	DSA IR 17-3.
☑	**c.** Verify WPS, welder qualifications and equipment.	**Periodic**	**SI**	DSA IR 17-3.
	S/A4. SHOP WELDING (IN ADDITION TO SECTION S/A3):			
	Test or Special Inspection	**Type**	**Performed By**	**Code References and Notes**
☑	**a.** Inspect groove welds, multi-pass fillet welds, single pass fillet welds > 5/16", plug and slot welds.	**Continuous**	**SI**	**Table 1705A.2.1 Items 5a.1–4;** AISC 360-16 (and AISC 341-16 as applicable); DSA IR 17-3.
☑	**b.** Inspect single-pass fillet welds ≤ 5/16", floor and roof deck welds.	**Periodic**	**SI**	**1705A.2.2, Table 1705A.2.1 Items 5a.5 & 5a.6;** AISC 360-16 (and AISC 341-16 as applicable); DSA IR 17-3.
	Test or Special Inspection	**Type**	**Performed By**	**Code References and Notes**
	S/A6. NONDESTRUCTIVE TESTING:			
	Test or Special Inspection	**Type**	**Performed By**	**Code References and Notes**
☑	**a.** Ultrasonic	**Test**	**LOR**	**1705A.2.1, 1705A.2.5;** AISC 341-16 J6.2, AISC 360-16 N5.5; AWS D1.1, AWS D1.8; DSA IR 17-2.
☑	**b.** Magnetic Particle	**Test**	**LOR**	**1705A.2.1, 1705A.2.5;** AISC 341-16 J6.2, AISC 360-16 N5.5; AWS D1.1, AWS D1.8; DSA IR 17-2.
	S/A11. Other Steel			
	Test or Special Inspection	**Type**	**Performed By**	**Code References and Notes**
☑	**a.** Shop Welding - Inspect welding of cold-formed steel Periodic/Special Inspector	Periodic	SI	
☑	b. Hollow bolts	Periodic	LOR	test per manufacturer's inspection procedures

1. Structural Testing and Inspection: Laboratory Verified Report Form DSA 291
2. Shop Welding Inspection: Laboratory Verified Report Form DSA 291, or, for independently contracting SI, Special Inspection Verified Report Form DSA 292

Appendix: Work Exempt from DSA Requirements for Structural Tests / Special Inspections

	CONCRETE/MASONRY:
☑	5. Testing of reinforcing bars is not required for items given in CBC Section 1910A.2 subject to the requirements and limitations in that section.
	WELDING:
☑	3. Non-structural interior cold-formed steel framing spanning less than 15'-0", such as in interior partitions, interior soffits, etc. supporting only self weight and light-weight finishes or adhered tile, masonry, stone, or terra cotta veneer no more than 5/8" thickness and apex less than 20'-0" in height and not over an exit way. Maximum tributary load to a member shall not exceed the equivalent of that occurring from a 10'x10' opening in a 15' tall wall for a header or king stud.
☑	4. Manufactured support frames and curbs using hot rolled or cold-formed steel (i.e., light gauge) for mechanical, electrical, or plumbing equipment weighing less than 2000# (equipment only) (connections of such frames to superstructure elements using welding will require special inspection as noted in selected item(s) for Sections S/A3, S/A4 and/or S/A5 of listing above).
☑	5. Manufactured components (e.g., Tolco, B-Line, Afcon, etc.) for mechanical, electrical, or plumbing hanger support and bracing (connections of such components to superstructure elements using welding will require special inspection as noted in selected item(s) for Sections S/A3, S/A4 and/or S/A5 of listing above).
☑	7. Any support for exempt non-structural components given in CBC Section 1617A.1.18 (which replaces ASCE 7-16, Section 13.1.4) meeting the following: A) when supported on a floor/roof, <400# and resulting composite center of mass (including component's center of mass) ≤4' above supporting floor/roof, B) when hung from a wall or roof/floor, <20# for discrete units or <5 plf for distributed systems.

☐ STOCKPILE CONCRETE FLOOR

IDENTIFICATION STAMP
DIV. OF THE STATE ARCHITECT
APP: 03-124589 INC:
REVIEWED FOR
SS ☑ FLS ☑ ACS ☑
DATE: 04/15/2025

American Modular Systems
787 Spreckels Ave., Manteca, CA 95336
Phone (209) 825-1921 Fax (209) 825-7018
www.americanmodular.com

INTELLECTUAL-PROPERTY & PROPRIETARY RIGHTS STATEMENT
COPYRIGHT © AMERICAN MODULAR SYSTEMS (AMS)
AMS OWNS ALL COPYRIGHT AND OTHER INTELLECTUAL-PROPERTY AND PROPRIETARY RIGHTS IN THESE DRAWINGS, SPECIFICATIONS, AND THE MATERIAL CONTAINED HEREIN. CERTAIN ELEMENTS SHOWN IN THESE DOCUMENTS ARE REGISTERED TRADEMARKS OF AMS. ALL PATENTABLE MATERIALS CONTAINED IN THESE DOCUMENTS AND ORIGINATING WITH AMS WILL REMAIN THE SOLE PROPERTY OF AMS. THESE DRAWING, SPECIFICATIONS, AND THE MATERIAL CONTAINED HEREIN MAY NOT BE REPRODUCED, TRANSMITTED, COPIED, DISTRIBUTED, MODIFIED, OR OTHERWISE DISPOSED OF (DIRECTLY OR INDIRECTLY) AND MAY NOT BE USED (IN WHOLE OR IN PART) TO ASSIST IN THE CONSTRUCTION, DESIGN, OR OTHER MAKING OF, OR FOR THE PURPOSE OF FURNISHING ANY INFORMATION FOR THE CONSTRUCTION, DESIGN, OR OTHER MAKING OF, ANY BUILDINGS (MODULAR OR OTHERWISE), DRAWINGS, SPECIFICATIONS, PRINTS, APPARATUS, OR PARTS THEREOF, EXCEPT AS EXPRESSLY PERMITTED BY WRITTEN CONSENT OF, OR IN A WRITTEN AGREEMENT WITH, AMS. SUBMITTAL OR DISTRIBUTION TO MEET OFFICIAL REGULATORY REQUIREMENTS WILL NOT BE CONSTRUED AS PUBLICATION IN DEROGATION OF AMS'S COPYRIGHT OR OTHER INTELLECTUAL-PROPERTY OR PROPRIETARY RIGHTS.

PRE-CHECKED SET NAME
24' x 40' THRU 120' x 40'
STANDARD MODULAR BUILDING
(HIGH SEISMIC)
FORM

SITE SPECIFIC PROJECT NAME
VENTURA COLLEGE
(1) 72'x40' BUILDING

APPROVED
DIV. OF THE STATE ARCHITECT
APP: 04-122051 PC
REVIEWED FOR
SS ☑ FLS ☑ ACS ☑ CG ☑
DATE: 04/03/2024

☒ 2022 CBC PRE-CHECK (PC) DOCUMENT
A SEPARATE PROJECT APPLICATION FOR CONSTRUCTION IS REQUIRED.

MANUFACTURER PROFESSIONAL OF RECORD ON PC

LICENSED ARCHITECT
RANDALL PATRICK CAVANAGH
No. C12631
Ren. 3-31-25
STATE OF CALIFORNIA

THESE DRAWINGS ARE PRELIMINARY AND NOT FOR CONSTRUCTION UNLESS STAMPED & SIGNED BY THE DESIGN PROFESSIONAL OF RECORD.

REVISIONS
1
2
3
4

DRAWN BY:	AA
SCALE:	AS NOTED
DATE:	MM/DD/YY
PROJECT NO:	XXXX-22

SHEET TITLE:
FORM
DSA-103

SHEET NUMBER:
D1

DSA 103-22: LISTING OF STRUCTURAL TESTS & SPECIAL INSPECTIONS, 2022 CBC

Application Number:	School Name:	School District:
04-122050	PC	PC
DSA File Number:	Increment Number:	Date Created: 2023-11-01 15:01:26

2022 CBC

IMPORTANT: This form is only a summary list of structural tests and some of the special inspections required for the project. Generally, the structural tests and special inspections noted on this form are those that will be performed by the Geotechnical Engineer of Record, Laboratory of Record, or Special Inspector. The actual complete test and inspection program must be performed as detailed on the DSA approved documents. The appendix at the bottom of this form identifies work NOT subject to DSA requirements for special inspection or structural testing. The project inspector is responsible for providing inspection of all facets of construction, including but not limited to, special inspections not listed on this form such as structural wood framing, high-load wood diaphragms, cold-formed steel framing, anchorage of non-structural components, etc., per Title 24, Part 2, Chapter 17A (2022 CBC).

****NOTE:** Undefined section and table references found in this document are from the CBC, or California Building Code.

KEY TO COLUMNS

1. TYPE	2. PERFORMED BY
Continuous – Indicates that a continuous special inspection is required	**GE (Geotechnical Engineer)** – Indicates that the special inspection shall be performed by a registered geotechnical engineer or his or her authorized representative.
Periodic – Indicates that a periodic special inspection is required	**LOR (Laboratory of Record)** – Indicates that the test or special inspection shall be performed by a testing laboratory accepted in the DSA Laboratory Evaluation and Acceptance (LEA) Program. See CAC Section 4-335.
Test – Indicates that a test is required	**PI (Project Inspector)** – Indicates that the special inspection may be performed by a project inspector when specifically approved by DSA.
	SI (Special Inspection) – Indicates that the special inspection shall be performed by an appropriately qualified/approved special inspector.

Geotechnical Reports: Project does NOT have and does NOT require a geotechnical report

	Test or Special Inspection	Type	Performed By	Code References and Notes
	S1. GENERAL:			
☑	**a.** Verify that: • Site has been prepared properly prior to placement of controlled fill and/or excavations for foundations. • Foundation excavations are extended to proper depth and have reached proper material. • Materials below footings are adequate to achieve the design bearing capacity.	**See Notes**	**PI**	Refer to specific items identified in the Appendix listing exemptions for limitations. Placement of controlled fill exceeding 12" depth under foundations is not permitted without a geotechnical report.
	S2. SOIL COMPACTION AND FILL:			
	Test or Special Inspection	**Type**	**Performed By**	**Code References and Notes**
☑	**a.** Verify use of proper materials, densities and inspect lift thicknesses, placement and compaction during placement of fill.	**Continuous**	**LOR***	* Under the supervision of a geotechnical engineer or LOR's engineering manager. Refer to specific items identified in the Appendix listing exemptions for limitations.
☑	**b.** Compaction testing.	**Test**	**LOR***	* Under the supervision of a geotechnical engineer or LOR's engineering manager. Refer to specific items identified in the Appendix listing exemptions for limitations.
	C1. CAST-IN-PLACE CONCRETE			
	Test or Special Inspection	**Type**	**Performed By**	**Code References and Notes**
☑	**a.** Verify use of required design mix.	**Periodic**	**SI**	**Table 1705A.3 Item 5, 1910A.1.**
☑	**b.** Identifiy, sample, and test reinforcing steel.	**Test**	**LOR**	**1910A.2;** ACI 318-19 Ch.20 and Section 26.6.1.2; DSA IR 17-10. (See Appendix (end of this form) for exemptions.)
☑	**c.** During concrete placement, fabricate specimens for strength tests, perform slump and air content tests, and determine the temperature of the concrete.	**Test**	**LOR**	**Table 1705A.3 Item 6;** ACI 318-19 Sections 26.5 & 26.12.
☑	**d.** Test concrete (f'c).	**Test**	**LOR**	**1905A.1.17;** ACI 318-19 Section 26.12.
☑	**e.** Batch plant inspection: **Continuous**	**See Notes**	**SI**	Default of **'Continuous'** per **1705A.3.3.** If approved by DSA, batch plant inspection may be reduced to **'Periodic'** subject to requirements in Section **1705A.3.3.1,** or eliminated per **1705A.3.3.2.** See IR 17-13. (See Appendix (end of this form) for exemptions.)
	S/A1. STRUCTURAL STEEL, COLD-FORMED STEEL AND ALUMINUM USED FOR STRUCTURAL PURPOSES			
	Test or Special Inspection	**Type**	**Performed By**	**Code References and Notes**
☑	**a.** Verify identification of all materials and: • Mill certificates indicate material properties that comply with requirements. • Material sizes, types and grades comply with requirements.	**Periodic**	*	**Table 1705A.2.1 Item 3a–3c.** 2202A.1; AISI S100-20 Section A3.1 & A3.2, AISI S240-20 Section A3 & A5, AISI S220-20 Sections A4 & A6. * By special inspector or qualified technician when performed off-site.
☑	**b.** Test unidentified materials	**Test**	**LOR**	**2202A.1.**
☑	**c.** Examine seam welds of HSS shapes	**Periodic**	**SI**	DSA IR 17-3.
☑	**d.** Verify and document steel fabrication per DSA-approved construction documents.	**Periodic**	**SI**	Not applicable to cold-formed steel light-frame construction, except for trusses (**1705A.2.4**).
	S/A3. WELDING:			
	Test or Special Inspection	**Type**	**Performed By**	**Code References and Notes**
☑	**a.** Verify weld filler material identification markings per AWS designation listed on the DSA-approved documents and the WPS.	**Periodic**	**SI**	**1705A.2.5, Table 1705A.2.1 Items 4 & 5;** AWS D1.1 and AWS D1.8 for structural steel; AWS D1.2 for Aluminum; AWS D1.3 for cold-formed steel; AWS D1.4 for reinforcing steel; DSA IR 17-3.
☑	**b.** Verify weld filler material manufacturer's certificate of compliance.	**Periodic**	**SI**	DSA IR 17-3.
☑	**c.** Verify WPS, welder qualifications and equipment.	**Periodic**	**SI**	DSA IR 17-3.
	S/A4. SHOP WELDING (IN ADDITION TO SECTION S/A3):			
	Test or Special Inspection	**Type**	**Performed By**	**Code References and Notes**
☑	**a.** Inspect groove welds, multi-pass fillet welds, single pass fillet welds > 5/16", plug and slot welds.	**Continuous**	**SI**	**Table 1705A.2.1 Items 5a.1–4;** AISC 360-16 (and AISC 341-16 as applicable); DSA IR 17-3.
☑	**b.** Inspect single-pass fillet welds ≤ 5/16", floor and roof deck welds.	**Periodic**	**SI**	**1705A.2.2, Table 1705A.2.1 Items 5a.5 & 5a.6;** AISC 360-16 (and AISC 341-16 as applicable); DSA IR 17-3.
	Test or Special Inspection	**Type**	**Performed By**	**Code References and Notes**
	S/A5. FIELD WELDING (IN ADDITION TO SECTION S/A3):			
	Test or Special Inspection	**Type**	**Performed By**	**Code References and Notes**
☑	**b.** Inspect single-pass fillet welds ≤ 5/16".	**Periodic**	**SI**	**Table 1705A.2.1 Item 5a.5;** AISC 360-16 (AISC 341-16 as applicable); DSA IR 17-3.
	Test or Special Inspection	**Type**	**Performed By**	**Code References and Notes**
	S/A6. NONDESTRUCTIVE TESTING:			
	Test or Special Inspection	**Type**	**Performed By**	**Code References and Notes**
☑	**a.** Ultrasonic	**Test**	**LOR**	**1705A.2.1, 1705A.2.5;** AISC 341-16 J6.2, AISC 360-16 N5.5; AWS D1.1, AWS D1.8; DSA IR 17-2.
☑	**b.** Magnetic Particle	**Test**	**LOR**	**1705A.2.1, 1705A.2.5;** AISC 341-16 J6.2, AISC 360-16 N5.5; AWS D1.1, AWS D1.8; DSA IR 17-2.
	S/A11. Other Steel			
	Test or Special Inspection	**Type**	**Performed By**	**Code References and Notes**
☑	**a.** Shop Welding - Inspect welding of cold-formed steel Periodic/Special Inspector	Periodic	SI	
☑	b. Hollow bolts	Periodic	LOR	test per manufacturer's inspection procedures

1. Structural Testing and Inspection: Laboratory Verified Report Form DSA 291
2. Shop Welding Inspection: Laboratory Verified Report Form DSA 291, or, for independently contracting SI, Special Inspection Verified Report Form DSA 292

	CONCRETE/MASONRY:
☑	5. Testing of reinforcing bars is not required for items given in CBC Section 1910A.2 subject to the requirements and limitations in that section.
	WELDING:
☑	3. Non-structural interior cold-formed steel framing spanning less than 15'-0", such as in interior partitions, interior soffits, etc. supporting only self weight and light-weight finishes or adhered tile, masonry, stone, or terra cotta veneer no more than 5/8" thickness and apex less than 20'-0" in height and not over an exit way. Maximum tributary load to a member shall not exceed the equivalent of that occurring from a 10'x10' opening in a 15' tall wall for a header or king stud.
☑	4. Manufactured support frames and curbs using hot rolled or cold-formed steel (i.e., light gauge) for mechanical, electrical, or plumbing equipment weighing less than 2000# (equipment only) (connections of such frames to superstructure elements using welding will require special inspection as noted in selected item(s) for Sections S/A3, S/A4 and/or S/A5 of listing above).
☑	5. Manufactured components (e.g., Tolco, B-Line, Afcon, etc.) for mechanical, electrical, or plumbing hanger support and bracing (connections of such components to superstructure elements using welding will require special inspection as noted in selected item(s) for Sections S/A3, S/A4 and/or S/A5 of listing above).
☑	7. Any support for exempt non-structural components given in CBC Section 1617A.1.18 (which replaces ASCE 7-16, Section 13.1.4) meeting the following: A) when supported on a floor/roof, <400# and resulting composite center of mass (including component's center of mass) ≤4' above supporting floor/roof, B) when hung from a wall or roof/floor, <20# for discrete units or <5 plf for distributed systems.

☐ CONSTRUCTION OF PERMANENT MODULAR RELOCATABLE BUILDING - WOOD FLOOR / CONCRETE FOUNDATION

DSA 103-22: LISTING OF STRUCTURAL TESTS & SPECIAL INSPECTIONS, 2022 CBC

Application Number:	School Name:	School District:
04-122050	PC	PC
DSA File Number:	Increment Number:	Date Created: 2023-11-01 15:07:53

2022 CBC

IMPORTANT: This form is only a summary list of structural tests and some of the special inspections required for the project. Generally, the structural tests and special inspections noted on this form are those that will be performed by the Geotechnical Engineer of Record, Laboratory of Record, or Special Inspector. The actual complete test and inspection program must be performed as detailed on the DSA approved documents. The appendix at the bottom of this form identifies work NOT subject to DSA requirements for special inspection or structural testing. The project inspector is responsible for providing inspection of all facets of construction, including but not limited to, special inspections not listed on this form such as structural wood framing, high-load wood diaphragms, cold-formed steel framing, anchorage of non-structural components, etc., per Title 24, Part 2, Chapter 17A (2022 CBC).

****NOTE:** Undefined section and table references found in this document are from the CBC, or California Building Code.

KEY TO COLUMNS

1. TYPE	2. PERFORMED BY
Continuous – Indicates that a continuous special inspection is required	**GE (Geotechnical Engineer)** – Indicates that the special inspection shall be performed by a registered geotechnical engineer or his or her authorized representative.
Periodic – Indicates that a periodic special inspection is required	**LOR (Laboratory of Record)** – Indicates that the test or special inspection shall be performed by a testing laboratory accepted in the DSA Laboratory Evaluation and Acceptance (LEA) Program. See CAC Section 4-335.
Test – Indicates that a test is required	**PI (Project Inspector)** – Indicates that the special inspection may be performed by a project inspector when specifically approved by DSA.
	SI (Special Inspection) – Indicates that the special inspection shall be performed by an appropriately qualified/approved special inspector.

Geotechnical Reports: Project does NOT have and does NOT require a geotechnical report

	Test or Special Inspection	Type	Performed By	Code References and Notes
	S2. SOIL COMPACTION AND FILL:			
	Test or Special Inspection	**Type**	**Performed By**	**Code References and Notes**
☑	**a.** Verify use of proper materials, densities and inspect lift thicknesses, placement and compaction during placement of fill.	**Continuous**	**LOR***	* Under the supervision of a geotechnical engineer or LOR's engineering manager. Refer to specific items identified in the Appendix listing exemptions for limitations.
☑	**b.** Compaction testing.	**Test**	**LOR***	* Under the supervision of a geotechnical engineer or LOR's engineering manager. Refer to specific items identified in the Appendix listing exemptions for limitations.
	C1. CAST-IN-PLACE CONCRETE			
	Test or Special Inspection	**Type**	**Performed By**	**Code References and Notes**
☑	**a.** Verify use of required design mix.	**Periodic**	**SI**	**Table 1705A.3 Item 5, 1910A.1.**
☑	**b.** Identifiy, sample, and test reinforcing steel.	**Test**	**LOR**	**1910A.2;** ACI 318-19 Ch.20 and Section 26.6.1.2; DSA IR 17-10. (See Appendix (end of this form) for exemptions.)
☑	**c.** During concrete placement, fabricate specimens for strength tests, perform slump and air content tests, and determine the temperature of the concrete.	**Test**	**LOR**	**Table 1705A.3 Item 6;** ACI 318-19 Sections 26.5 & 26.12.
☑	**d.** Test concrete (f'c).	**Test**	**LOR**	**1905A.1.17;** ACI 318-19 Section 26.12.
☑	**e.** Batch plant inspection: **Continuous**	**See Notes**	**SI**	Default of **'Continuous'** per **1705A.3.3.** If approved by DSA, batch plant inspection may be reduced to **'Periodic'** subject to requirements in Section **1705A.3.3.1,** or eliminated per **1705A.3.3.2.** See IR 17-13. (See Appendix (end of this form) for exemptions.)
	S/A1. STRUCTURAL STEEL, COLD-FORMED STEEL AND ALUMINUM USED FOR STRUCTURAL PURPOSES			
	Test or Special Inspection	**Type**	**Performed By**	**Code References and Notes**
☑	**a.** Verify identification of all materials and: • Mill certificates indicate material properties that comply with requirements. • Material sizes, types and grades comply with requirements.	**Periodic**	*	**Table 1705A.2.1 Item 3a–3c.** 2202A.1; AISI S100-20 Section A3.1 & A3.2, AISI S240-20 Section A3 & A5, AISI S220-20 Sections A4 & A6. * By special inspector or qualified technician when performed off-site.
☑	**b.** Test unidentified materials	**Test**	**LOR**	**2202A.1.**
☑	**c.** Examine seam welds of HSS shapes	**Periodic**	**SI**	DSA IR 17-3.
☑	**d.** Verify and document steel fabrication per DSA-approved construction documents.	**Periodic**	**SI**	Not applicable to cold-formed steel light-frame construction, except for trusses (**1705A.2.4**).
	S/A3. WELDING:			
	Test or Special Inspection	**Type**	**Performed By**	**Code References and Notes**
☑	**a.** Verify weld filler material identification markings per AWS designation listed on the DSA-approved documents and the WPS.	**Periodic**	**SI**	**1705A.2.5, Table 1705A.2.1 Items 4 & 5;** AWS D1.1 and AWS D1.8 for structural steel; AWS D1.2 for Aluminum; AWS D1.3 for cold-formed steel; AWS D1.4 for reinforcing steel; DSA IR 17-3.
☑	**b.** Verify weld filler material manufacturer's certificate of compliance.	**Periodic**	**SI**	DSA IR 17-3.
☑	**c.** Verify WPS, welder qualifications and equipment.	**Periodic**	**SI**	DSA IR 17-3.
	S/A4. SHOP WELDING (IN ADDITION TO SECTION S/A3):			
	Test or Special Inspection	**Type**	**Performed By**	**Code References and Notes**
☑	**a.** Inspect groove welds, multi-pass fillet welds, single pass fillet welds > 5/16", plug and slot welds.	**Continuous**	**SI**	**Table 1705A.2.1 Items 5a.1–4;** AISC 360-16 (and AISC 341-16 as applicable); DSA IR 17-3.
☑	**b.** Inspect single-pass fillet welds ≤ 5/16", floor and roof deck welds.	**Periodic**	**SI**	**1705A.2.2, Table 1705A.2.1 Items 5a.5 & 5a.6;** AISC 360-16 (and AISC 341-16 as applicable); DSA IR 17-3.
	Test or Special Inspection	**Type**	**Performed By**	**Code References and Notes**
	S/A5. FIELD WELDING (IN ADDITION TO SECTION S/A3):			
	Test or Special Inspection	**Type**	**Performed By**	**Code References and Notes**
☑	**b.** Inspect single-pass fillet welds ≤ 5/16".	**Periodic**	**SI**	**Table 1705A.2.1 Item 5a.5;** AISC 360-16 (AISC 341-16 as applicable); DSA IR 17-3.
	Test or Special Inspection	**Type**	**Performed By**	**Code References and Notes**
	Test or Special Inspection	**Type**	**Performed By**	**Code References and Notes**
	S/A6. NONDESTRUCTIVE TESTING:			
	Test or Special Inspection	**Type**	**Performed By**	**Code References and Notes**
☑	**a.** Ultrasonic	**Test**	**LOR**	**1705A.2.1, 1705A.2.5;** AISC 341-16 J6.2, AISC 360-16 N5.5; AWS D1.1, AWS D1.8; DSA IR 17-2.
☑	**b.** Magnetic Particle	**Test**	**LOR**	**1705A.2.1, 1705A.2.5;** AISC 341-16 J6.2, AISC 360-16 N5.5; AWS D1.1, AWS D1.8; DSA IR 17-2.
	S/A11. Other Steel			
	Test or Special Inspection	**Type**	**Performed By**	**Code References and Notes**
☑	**a.** Shop Welding - Inspect welding of cold-formed steel Periodic/Special Inspector	Periodic	SI	
☑	b. Hollow bolts	Periodic	LOR	test per manufacturer's inspection procedures

1. Structural Testing and Inspection: Laboratory Verified Report Form DSA 291
2. Shop Welding Inspection: Laboratory Verified Report Form DSA 291, or, for independently contracting SI, Special Inspection Verified Report Form DSA 292

	CONCRETE/MASONRY:
☑	5. Testing of reinforcing bars is not required for items given in CBC Section 1910A.2 subject to the requirements and limitations in that section.
	WELDING:
☑	3. Non-structural interior cold-formed steel framing spanning less than 15'-0", such as in interior partitions, interior soffits, etc. supporting only self weight and light-weight finishes or adhered tile, masonry, stone, or terra cotta veneer no more than 5/8" thickness and apex less than 20'-0" in height and not over an exit way. Maximum tributary load to a member shall not exceed the equivalent of that occurring from a 10'x10' opening in a 15' tall wall for a header or king stud.
☑	4. Manufactured support frames and curbs using hot rolled or cold-formed steel (i.e., light gauge) for mechanical, electrical, or plumbing equipment weighing less than 2000# (equipment only) (connections of such frames to superstructure elements using welding will require special inspection as noted in selected item(s) for Sections S/A3, S/A4 and/or S/A5 of listing above).
☑	5. Manufactured components (e.g., Tolco, B-Line, Afcon, etc.) for mechanical, electrical, or plumbing hanger support and bracing (connections of such components to superstructure elements using welding will require special inspection as noted in selected item(s) for Sections S/A3, S/A4 and/or S/A5 of listing above).
☑	7. Any support for exempt non-structural components given in CBC Section 1617A.1.18 (which replaces ASCE 7-16, Section 13.1.4) meeting the following: A) when supported on a floor/roof, <400# and resulting composite center of mass (including component's center of mass) ≤4' above supporting floor/roof, B) when hung from a wall or roof/floor, <20# for discrete units or <5 plf for distributed systems.

☒ CONSTRUCTION OF PERMANENT MODULAR RELOCATABLE BUILDING - CONCRETE FLOOR / CONCRETE FOUNDATION

DSA 103-22: LISTING OF STRUCTURAL TESTS & SPECIAL INSPECTIONS, 2022 CBC

Application Number:	School Name:	School District:
04-122050	PC	PC
DSA File Number:	Increment Number:	Date Created: 2023-11-01 15:11:51

2022 CBC

IMPORTANT: This form is only a summary list of structural tests and some of the special inspections required for the project. Generally, the structural tests and special inspections noted on this form are those that will be performed by the Geotechnical Engineer of Record, Laboratory of Record, or Special Inspector. The actual complete test and inspection program must be performed as detailed on the DSA approved documents. The appendix at the bottom of this form identifies work NOT subject to DSA requirements for special inspection or structural testing. The project inspector is responsible for providing inspection of all facets of construction, including but not limited to, special inspections not listed on this form such as structural wood framing, high-load wood diaphragms, cold-formed steel framing, anchorage of non-structural components, etc., per Title 24, Part 2, Chapter 17A (2022 CBC).

****NOTE:** Undefined section and table references found in this document are from the CBC, or California Building Code.

KEY TO COLUMNS

1. TYPE	2. PERFORMED BY
Continuous – Indicates that a continuous special inspection is required	**GE (Geotechnical Engineer)** – Indicates that the special inspection shall be performed by a registered geotechnical engineer or his or her authorized representative.
Periodic – Indicates that a periodic special inspection is required	**LOR (Laboratory of Record)** – Indicates that the test or special inspection shall be performed by a testing laboratory accepted in the DSA Laboratory Evaluation and Acceptance (LEA) Program. See CAC Section 4-335.
Test – Indicates that a test is required	**PI (Project Inspector)** – Indicates that the special inspection may be performed by a project inspector when specifically approved by DSA.
	SI (Special Inspection) – Indicates that the special inspection shall be performed by an appropriately qualified/approved special inspector.

Geotechnical Reports: Project does NOT have and does NOT require a geotechnical report

	Test or Special Inspection	Type	Performed By	Code References and Notes
	S2. SOIL COMPACTION AND FILL:			
	Test or Special Inspection	**Type**	**Performed By**	**Code References and Notes**
☑	**a.** Verify use of proper materials, densities and inspect lift thicknesses, placement and compaction during placement of fill.	**Continuous**	**LOR***	* Under the supervision of a geotechnical engineer or LOR's engineering manager. Refer to specific items identified in the Appendix listing exemptions for limitations.
☑	**b.** Compaction testing.	**Test**	**LOR***	* Under the supervision of a geotechnical engineer or LOR's engineering manager. Refer to specific items identified in the Appendix listing exemptions for limitations.
	C1. CAST-IN-PLACE CONCRETE			
	Test or Special Inspection	**Type**	**Performed By**	**Code References and Notes**
☑	**a.** Verify use of required design mix.	**Periodic**	**SI**	**Table 1705A.3 Item 5, 1910A.1.**
☑	**b.** Identifiy, sample, and test reinforcing steel.	**Test**	**LOR**	**1910A.2;** ACI 318-19 Ch.20 and Section 26.6.1.2; DSA IR 17-10. (See Appendix (end of this form) for exemptions.)
☑	**c.** During concrete placement, fabricate specimens for strength tests, perform slump and air content tests, and determine the temperature of the concrete.	**Test**	**LOR**	**Table 1705A.3 Item 6;** ACI 318-19 Sections 26.5 & 26.12.
☑	**d.** Test concrete (f'c).	**Test**	**LOR**	**1905A.1.17;** ACI 318-19 Section 26.12.
☑	**e.** Batch plant inspection: **Continuous**	**See Notes**	**SI**	Default of **'Continuous'** per **1705A.3.3.** If approved by DSA, batch plant inspection may be reduced to **'Periodic'** subject to requirements in Section **1705A.3.3.1,** or eliminated per **1705A.3.3.2.** See IR 17-13. (See Appendix (end of this form) for exemptions.)
	S/A1. STRUCTURAL STEEL, COLD-FORMED STEEL AND ALUMINUM USED FOR STRUCTURAL PURPOSES			
	Test or Special Inspection	**Type**	**Performed By**	**Code References and Notes**
☑	**a.** Verify identification of all materials and: • Mill certificates indicate material properties that comply with requirements. • Material sizes, types and grades comply with requirements.	**Periodic**	*	**Table 1705A.2.1 Item 3a–3c.** 2202A.1; AISI S100-20 Section A3.1 & A3.2, AISI S240-20 Section A3 & A5, AISI S220-20 Sections A4 & A6. * By special inspector or qualified technician when performed off-site.
☑	**b.** Test unidentified materials	**Test**	**LOR**	**2202A.1.**
☑	**c.** Examine seam welds of HSS shapes	**Periodic**	**SI**	DSA IR 17-3.
☑	**d.** Verify and document steel fabrication per DSA-approved construction documents.	**Periodic**	**SI**	Not applicable to cold-formed steel light-frame construction, except for trusses (**1705A.2.4**).
	S/A3. WELDING:			
	Test or Special Inspection	**Type**	**Performed By**	**Code References and Notes**
☑	**a.** Verify weld filler material identification markings per AWS designation listed on the DSA-approved documents and the WPS.	**Periodic**	**SI**	**1705A.2.5, Table 1705A.2.1 Items 4 & 5;** AWS D1.1 and AWS D1.8 for structural steel; AWS D1.2 for Aluminum; AWS D1.3 for cold-formed steel; AWS D1.4 for reinforcing steel; DSA IR 17-3.
☑	**b.** Verify weld filler material manufacturer's certificate of compliance.	**Periodic**	**SI**	DSA IR 17-3.
☑	**c.** Verify WPS, welder qualifications and equipment.	**Periodic**	**SI**	DSA IR 17-3.
	S/A4. SHOP WELDING (IN ADDITION TO SECTION S/A3):			
	Test or Special Inspection	**Type**	**Performed By**	**Code References and Notes**
☑	**a.** Inspect groove welds, multi-pass fillet welds, single pass fillet welds > 5/16", plug and slot welds.	**Continuous**	**SI**	**Table 1705A.2.1 Items 5a.1–4;** AISC 360-16 (and AISC 341-16 as applicable); DSA IR 17-3.
☑	**b.** Inspect single-pass fillet welds ≤ 5/16", floor and roof deck welds.	**Periodic**	**SI**	**1705A.2.2, Table 1705A.2.1 Items 5a.5 & 5a.6;** AISC 360-16 (and AISC 341-16 as applicable); DSA IR 17-3.
	Test or Special Inspection	**Type**	**Performed By**	**Code References and Notes**
	S/A5. FIELD WELDING (IN ADDITION TO SECTION S/A3):			
	Test or Special Inspection	**Type**	**Performed By**	**Code References and Notes**
☑	**b.** Inspect single-pass fillet welds ≤ 5/16".	**Periodic**	**SI**	**Table 1705A.2.1 Item 5a.5;** AISC 360-16 (AISC 341-16 as applicable); DSA IR 17-3.
	Test or Special Inspection	**Type**	**Performed By**	**Code References and Notes**
	S/A6. NONDESTRUCTIVE TESTING:			
	Test or Special Inspection	**Type**	**Performed By**	**Code References and Notes**
☑	**a.** Ultrasonic	**Test**	**LOR**	**1705A.2.1, 1705A.2.5;** AISC 341-16 J6.2, AISC 360-16 N5.5; AWS D1.1, AWS D1.8; DSA IR 17-2.
☑	**b.** Magnetic Particle	**Test**	**LOR**	**1705A.2.1, 1705A.2.5;** AISC 341-16 J6.2, AISC 360-16 N5.5; AWS D1.1, AWS D1.8; DSA IR 17-2.
	S/A11. Other Steel			
	Test or Special Inspection	**Type**	**Performed By**	**Code References and Notes**
☑	**a.** Shop Welding - Inspect welding of cold-formed steel Periodic/Special Inspector	Periodic	SI	
☑	b. Hollow bolts	Periodic	LOR	test per manufacturer's inspection procedures

1. Structural Testing and Inspection: Laboratory Verified Report Form DSA 291
2. Shop Welding Inspection: Laboratory Verified Report Form DSA 291, or, for independently contracting SI, Special Inspection Verified Report Form DSA 292

Appendix: Work Exempt from DSA Requirements for Structural Tests / Special Inspections

	CONCRETE/MASONRY:
☑	5. Testing of reinforcing bars is not required for items given in CBC Section 1910A.2 subject to the requirements and limitations in that section.
	WELDING:
☑	3. Non-structural interior cold-formed steel framing spanning less than 15'-0", such as in interior partitions, interior soffits, etc. supporting only self weight and light-weight finishes or adhered tile, masonry, stone, or terra cotta veneer no more than 5/8" thickness and apex less than 20'-0" in height and not over an exit way. Maximum tributary load to a member shall not exceed the equivalent of that occurring from a 10'x10' opening in a 15' tall wall for a header or king stud.
☑	4. Manufactured support frames and curbs using hot rolled or cold-formed steel (i.e., light gauge) for mechanical, electrical, or plumbing equipment weighing less than 2000# (equipment only) (connections of such frames to superstructure elements using welding will require special inspection as noted in selected item(s) for Sections S/A3, S/A4 and/or S/A5 of listing above).
☑	5. Manufactured components (e.g., Tolco, B-Line, Afcon, etc.) for mechanical, electrical, or plumbing hanger support and bracing (connections of such components to superstructure elements using welding will require special inspection as noted in selected item(s) for Sections S/A3, S/A4 and/or S/A5 of listing above).
☑	7. Any support for exempt non-structural components given in CBC Section 1617A.1.18 (which replaces ASCE 7-16, Section 13.1.4) meeting the following: A) when supported on a floor/roof, <400# and resulting composite center of mass (including component's center of mass) ≤4' above supporting floor/roof, B) when hung from a wall or roof/floor, <20# for discrete units or <5 plf for distributed systems.

☐ RELOCATION OF CERTIFIED RELOCATABLE BUILDING

IDENTIFICATION STAMP
DIV. OF THE STATE ARCHITECT
APP: 03-124589 INC:
REVIEWED FOR
SS ☑ FLS ☑ ACS ☑
DATE: 04/15/2025

AMS®
American Modular Systems
787 Spreckels Ave., Manteca, CA 95336
Phone (209) 825-1921 Fax (209) 825-7018
www.americanmodular.com

INTELLECTUAL-PROPERTY & PROPRIETARY RIGHTS STATEMENT
COPYRIGHT © AMERICAN MODULAR SYSTEMS (AMS)
AMS OWNS ALL COPYRIGHT AND OTHER INTELLECTUAL-PROPERTY AND PROPRIETARY RIGHTS IN THESE DRAWINGS, SPECIFICATIONS, AND THE MATERIAL CONTAINED HEREIN. CERTAIN ELEMENTS SHOWN IN THESE DOCUMENTS ARE REGISTERED TRADEMARKS OF AMS. ALL PATENTABLE MATERIALS CONTAINED IN THESE DOCUMENTS AND ORIGINATING WITH AMS WILL REMAIN THE SOLE PROPERTY OF AMS. THESE DRAWING, SPECIFICATIONS, AND THE MATERIAL CONTAINED HEREIN MAY NOT BE REPRODUCED, TRANSMITTED, COPIED, DISTRIBUTED, MODIFIED, OR OTHERWISE DISPOSED OF (DIRECTLY OR INDIRECTLY) AND MAY NOT BE USED (IN WHOLE OR IN PART) TO ASSIST IN THE CONSTRUCTION, DESIGN, OR OTHER MAKING OF, OR FOR THE PURPOSE OF FURNISHING ANY INFORMATION FOR THE CONSTRUCTION, DESIGN, OR OTHER MAKING OF, ANY BUILDINGS (MODULAR OR OTHERWISE), DRAWINGS, SPECIFICATIONS, PRINTS, APPARATUS, OR PARTS THEREOF, EXCEPT AS EXPRESSLY PERMITTED BY WRITTEN CONSENT OF, OR IN A WRITTEN AGREEMENT WITH, AMS. SUBMITTAL OR DISTRIBUTION TO MEET OFFICIAL REGULATORY REQUIREMENTS WILL NOT BE CONSTRUED AS PUBLICATION IN DEROGATION OF AMS'S COPYRIGHT OR OTHER INTELLECTUAL-PROPERTY OR PROPRIETARY RIGHTS.

PRE-CHECKED SET NAME
24' x 40' THRU 120' x 40' STANDARD MODULAR BUILDING (HIGH SEISMIC)
FORM®

SITE SPECIFIC PROJECT NAME
VENTURA COLLEGE
(1) 72'x40' BUILDING

APPROVED
DIV. OF THE STATE ARCHITECT
APP: 04-122051 PC
REVIEWED FOR
SS ☑ FLS ☑ ACS ☑ CG ☑
DATE: 04/03/2024

☒ 2022 CBC PRE-CHECK (PC) DOCUMENT
A SEPARATE PROJECT APPLICATION FOR CONSTRUCTION IS REQUIRED.

MANUFACTURER PROFESSIONAL OF RECORD ON PC

LICENSED ARCHITECT
RANDAL PATRICK CAVANAGH
No. C12631
Ren. 3-31-25
STATE OF CALIFORNIA

THESE DRAWINGS ARE PRELIMINARY AND NOT FOR CONSTRUCTION UNLESS STAMPED & SIGNED BY THE DESIGN PROFESSIONAL OF RECORD.

REVISIONS
1
2
3
4

DRAWN BY:	AA
SCALE:	AS NOTED
DATE:	MM/DD/YY
PROJECT NO:	XXXX-22

SHEET TITLE:
FORM
DSA-103

SHEET NUMBER:
D2

SECTION 1 GENERAL REQUIREMENTS

1. GENERAL
   - A. THE REQUIREMENTS OF THE GENERAL CONDITIONS OF THE AGREEMENT AND THIS GENERAL REQUIREMENT APPLY TO THE SEVERAL TRADE SECTIONS WITH THE SAME FORCE AS THOUGH FULLY REPEATED IN EACH TRADE SECTION.
   - B. NAME BRANDS ARE INDICATED TO ESTABLISH A STANDARD OF QUALITY. ITEMS OF EQUAL OR BETTER QUALITY MAY BE SUBSTITUTED FOR THE LISTED BRAND NAMED PRODUCTS WITH THE WRITTEN APPROVAL OF D.S.A. AND THE RDPRC.
   - C. ALL WORK SHALL COMPLY WITH THE REQUIREMENTS OF TITLES 19 AND 24 CALIFORNIA CODE OF REGULATIONS, 2022 C.B.C. NO CHANGES SHALL BE MADE FROM D.S.A. APPROVED DRAWINGS OR SPECIFICATIONS WITHOUT PRIOR WRITTEN APPROVAL OF D.S.A. AND THE RDPRC.
2. SCOPE OF WORK
   - A. THE WORK CONSISTS OF MANUFACTURING OFF-SITE IN A PLANT AND INSTALLING ON-SITE, MODULAR RELOCATABLE BUILDINGS AS DEFINED HEREIN AND SHOWN AND DETAILED ON DRAWINGS.
   - B. ALL REQUIREMENTS OF TITLE 24 OF THE STATE OF CALIFORNIA, CODE OF REGULATIONS, RELATING TO INSPECTIONS AND VERIFIED REPORTS SHALL BE COMPLIED WITH AND SHALL INCLUDE:
     1. GENERAL RESPONSIBLE CHARGE OF FIELD ADMINISTRATION TO BE PROVIDED BY THE RDPRC.
     2. INSPECTION IN-PLANT DURING THE COURSE OF CONSTRUCTION BY AN INSPECTOR APPROVED BY THE DIVISION OF THE STATE ARCHITECT AND THE DISTRICT ARCHITECT. THE INSPECTOR SHALL BE RESPONSIBLE FOR AND APPROVED TO INSPECT THE GENERAL CONSTRUCTION WELDING, MECHANICAL, AND ELECTRICAL WORK. COST OF THESE INSPECTIONS SHALL BE BORNE BY THE SCHOOL DISTRICTS.
     3. ON-SITE INSPECTION OF THE BUILDING INSTALLATION ELECTRICAL AND UTILITY INSTALLATION OR CONNECTIONS BY AN INSPECTOR APPROVED BY THE DIVISION OF THE STATE ARCHITECT AND THE DISTRICT ARCHITECT AND RETAINED BY THE SCHOOL DISTRICT.
     4. OTHER SPECIAL TESTS OR INSPECTIONS AS MAY BE REQUIRED BY THE DIVISION OF THE STATE ARCHITECT.
     5. ADDENDUMS SHALL BE SIGNED BY THE RDPRC & APPROVED BY D.S.A.
     6. CHANGES TO CONSTRUCTION DOCUMENT AFFECTING ACS, FLS & SSS SHALL BE SIGNED BY THE OWNER & THE RDPRC & APPROVED BY D.S.A. PRIOR TO COMMENCING WORK. CHANGES TO THE CONSTRUCTION COST ARE REPORTED TO D.S.A. USING FORM DSA-168 AT THE CONCLUSION OF THE PROJECT.
     7. THE TESTING LAB SHALL BE IN THE EMPLOY OF THE OWNER.
     8. ALL CONTRACTORS SHALL VERIFY ALL WORK CONDITIONS, DIMENSIONS AND DETAILS AND REPORT ANY OR ALL OMISSIONS AND DISCREPANCIES TO THE RDPRC/OWNER IMMEDIATELY BEFORE COMMENCING WORK.
     9. EACH CONTRACTOR TO BE RESPONSIBLE TO SEE THAT THEIR WORK CONFORMS TO ALL GOVERNMENTAL CODES WHETHER OR NOT SO STATED ON THE DRAWINGS.
     10. ALL MATERIALS AND WORKMANSHIP TO CONFORM TO THE LATEST REQUIREMENTS OF THE GOVERNING BUILDING CODES IN EFFECT AT TIME OF DSA APPLICATION.
     11. ALL MANUFACTURED ARTICLES, MATERIALS AND EQUIPMENT SHALL BE APPLIED, INSTALLED, CONNECTED AND ERECTED PER MANUFACTURER'S DIRECTIONS AND INSTRUCTIONS.
     12. SHOP DRAWINGS MAY BE REQUIRED. IF SO, THEY WILL BE ACCURATELY DRAWN TO A LARGE ENOUGH SCALE TO SHOW ALL PERTINENT FEATURES OF THE ITEM AND ITS CONNECTION TO RELATED WORK.
     13. THE MANUFACTURER OF BUILDING IS TO PLACE TWO PERMANENT METAL IDENTIFICATION LABEL ON EACH MODULE, MECHANICALLY FASTENED TO THE FRAME SEE "GENERAL DESIGN REQUIREMENTS", SHEET N2.0. FOR PROJECTS MANUFACTURED OFF-SITE, THE PLANT INSPECTOR IS TO INDICATE THE MANUFACTURER'S NAME AND SERIAL NUMBER OF EACH MODULE ON THE VERIFIED REPORT AND D.S.A. APP. NUMBER.
     14. ALL TESTS AND INSPECTIONS REQUIRED BY DSA SHALL BE COMPLIED WITH. ALL TESTS REQUIRED BY FIRE AND LIFE SAFETY REGULATIONS SHALL BE BY A NATIONALLY RECOGNIZED TESTING LABORATORY.

SECTION 2 FOUNDATION

1. ASSUMED ALLOWABLE SOIL BEARING:
   - 1500 P.S.F. FOR CONCRETE FOUNDATIONS EMBEDDED 12" MINIMUM BELOW GRADE. (1/3 INCREASE IN SOIL BEARING CAPACITY NOT PERMITTED FOR WIND & SEISMIC LOAD COMBINATIONS UNLESS USING ALTERNATIVE BASIC LOAD COMBINATIONS PER CBC SECTION 1605A.3.2)
2. FOOTINGS SHALL BE LOCATED ON UNDISTURBED, FIRM, NATURAL SOIL OR APPROVED COMPACTED FILL.
3. WORK NOT INCLUDED:
   - A. ALL ON-SITE OR OFF-SITE UTILITIES AND THE CONNECTION OF THEM TO THE BUILDING UNLESS INDICATED ON THE DRAWINGS.
   - B. ALL LEVELING, GRADING OR OTHER SITE PREPARATION EXCEPT CONCRETE OR WOOD LEVELING STRIPS WHERE REQUIRED, UNLESS OTHERWISE INDICATED ON THE DRAWINGS.
   - C. FIRE ALARM SYSTEM, PROGRAM BELL, PUBLIC ADDRESS SYSTEM, INTERCOM SYSTEM, TV, TELEPHONE SYSTEM, UNLESS OTHERWISE INDICATED ON THE DRAWINGS, OR MODIFIED BY CHANGE ORDER.
4. WHEELS AND HITCH SHALL REMAIN THE PROPERTY OF THE CONTRACTOR.
5. ACCESSIBILITY OF SITE: THE SCHOOL DISTRICT SHALL PROVIDE ACCESS TO THE SITE FOR THE INSTALLATION OF BUILDINGS. REMOVAL OF TREES, SHRUBS, FENCING, SPRINKLERS ETC. NECESSARY FOR THE MOVE-IN OF BUILDINGS SHALL BE THE RESPONSIBILITY OF THE SCHOOL DISTRICT.

SECTION 3 CONCRETE

1. CONCRETE CONSTRUCTION SHALL CONFORM TO ACI 318-19.
2. THE MINIMUM 28 DAY STRENGTH AND TYPE OF CONCRETE SHALL BE AS FOLLOWS:
   FOUNDATIONS.....PER SHEET N1.0A (150 PCF)
   FOUNDATION VENTS & ACCESS WELLS.....PER SHEET N1.0A (150 PCF)
   CONCRETE OVER METAL DECK.....3000 PSI (110 PCF) *

* IF THE EQUILIBRIUM DENSITY OF THE CONCRETE MIX DESIGN EXCEEDS 110 PCF AS TESTED PER ASTM C567, THEN TEMPORARY MID-SPAN SHORING IS REQUIRED DURING CONCRETE PLACEMENT. THE CONCRETE EQUILIBRIUM DENSITY SHALL NOT EXCEED 120 PCF.

3. THE MAXIMUM WATER TO CEMENT (W/C) RATIO SHALL BE PER SHEET N1.0A FOR FOUNDATIONS AND 0.45 FOR CONCRETE OVER METAL DECK SLABS.
4. CONCRETE SLUMP SHALL BE 4" ± 1" PRIOR TO ADDING ANY WATER REDUCING ADMIXTURES. CONCRETE SLUMP SHALL NOT EXCEED 8"± 1 1/2" WHEN USING A WATER REDUCING ADMIXTURE.
5. CEMENT SHALL CONFORM TO ASTM C150. CEMENT TYPE SHALL BE PER SHEET N1.0A FOR FOUNDATIONS, TYPE I OR II FOR CONCRETE OVER METAL DECK SLABS.
   - A. FLY ASH SHALL CONFORM TO ASTM C618 CLASS 'F' OR 'N' AND SHALL NOT EXCEED 25% CEMENT REPLACEMENT BY WEIGHT.
   - B. SLAG CEMENT SHALL CONFORM TO ASTM C989, GRADE 100 OR 120 AND SHALL NOT EXCEED 50% CEMENT REPLACEMENT BY WEIGHT.
   - C. COMBINATION OF FLY ASH & SLAG CEMENT SHALL NOT EXCEED 50% CEMENT REPLACEMENT BY WEIGHT.
6. CONCRETE AGGREGATES:
   - A. NATURAL SAND AND ROCK AGGREGATES SHALL CONFORM TO ASTM C33.
   - B. LIGHTWEIGHT AGGREGATE SHALL CONFORM TO ASTM C330.
   - C. MAX AGGREGATE SIZE SHALL BE 1"±1/4" FOR NORMAL WT. CONCRETE EXCEPT 3/8" OR 1/2" MAX MAY BE USED FOR FOUNDATION VENTS & ACCESS WELLS.
   - D. MAX AGGREGATE SIZE SHALL BE 3/8" OR 1/2" FOR LIGHT WT. CONCRETE.
7. REINFORCING SHALL CONFORM TO ASTM A615-GRADE 60, UNLESS OTHERWISE

CONCRETE continued

8. CONCRETE COVER OVER REINFORCING STEEL SHALL BE AS FOLLOWS, UNLESS OTHERWISE NOTED ON DRAWINGS:
   CONCRETE DIRECTLY AGAINST GROUND (EXCEPT SLABS) .....3"
   CONCRETE EXPOSED TO GROUND BUT PLACED IN FORMS .....2"
   SLABS (ON GROUND) .....POSITION IN CENTER OF SLAB
9. ALL BARS SHALL HAVE A CLASS B MINIMUM LAP SPLICE PER DETAILS 6 & 9/S1.4 AND SPLICES IN ADJACENT BARS SHALL BE STAGGERED, U.N.O.
10. REINFORCING BARS SHALL NOT BE WELDED UNLESS SPECIFICALLY DETAILED IN THE APPROVED DRAWINGS. BARS DETAILED TO BE WELDED SHALL BE ASTM A706 BARS AND WELDING ELECTRODES SHALL BE E80XX. WELDING SHALL CONFORM WITH AWS D1.4-2017 AND SHALL BE CONTINUOUSLY INSPECTED.
11. WELDED WIRE FABRIC SHALL CONFORM TO ASTM A185 AND SHALL BE LAP SPLICED TWO SQUARES MINIMUM EACH DIRECTION.
12. NOTIFY THE RDPRC PRIOR TO PLACING CONCRETE.
13. CHEMICAL ADMIXTURES SHALL CONFORM TO ASTM C494.
14. AIR-ENTRAINING ADMIXTURE SHALL CONFORM TO ASTM C260.
15. NON-SHRINK GROUT: ASTM C1107, 5000 PSI MIN AT 7 DAYS.

SECTION 5 STEEL

1. GENERAL - ALL WORK SHALL CONFORM TO THE REQUIREMENTS OF AISC 360-16, TITLE 24 OF CALIFORNIA CODE OF REGULATIONS SECTION 2212A.1.2, AND THE AMERICAN IRON AND STEEL INSTITUTE SPECIFICATIONS FOR DESIGN OF STEEL STRUCTURAL MEMBERS. A COPY OF TITLE 24 SHALL BE KEPT AT THE JOBSITE AT ALL TIMES.
   - A. FABRICATION AND ERECTION SHALL COMPLY WITH AISC 360-16 CHAPTER 'M' AND AISC 341-16 CHAPTER 'I'.
2. WELDING - ALL WELDING SHALL COMPLY WITH REQUIREMENTS OF THE "STRUCTURAL WELDING CODE" OF THE AMERICAN WELDING SOCIETY AND WELDING DONE BY OPERATORS QUALIFIED BY TESTS ACCEPTABLE TO THE DIVISION OF THE STATE ARCHITECT. WELDING INSPECTION PER TITLE 24, PART 2, CCR, SECTIONS 1705A.2.5. WELDING ELECTRODES, IF UTILIZED, SHALL BE E70XX. ALL WELDS USED IN PRIMARY MEMBERS AND CONNECTIONS IN THE LATERAL FORCE-RESISTING SYSTEMS SHALL BE MADE WITH A FILLER METAL THAT HAS A MINIMUM CHARPY V-NOTCH TOUGHNESS OF 20FT-LBS AT ZERO DEGREES F AND COMPLYING WITH AWS D1.8-2016. SECTION 6.1.
3. STRUCTURAL STEEL SHAPES SHALL CONFORM TO THE FOLLOWING:
   - A. WIDE FLANGE BEAMS SHALL CONFORM TO ASTM A992, GRADE 50, TYP. U.N.O.
   - B. STRUCTURAL STEEL CHANNELS SHALL CONFORM TO ASTM A36 (36 KSI) TYP. U.N.O. WHERE DRAWINGS SPECIFY 50 KSI, CHANNELS SHALL CONFORM TO ASTM A572, GR. 50. NOTE: ASTM A572, GR. 50 MAY BE SUBSTITUTED FOR ASTM A36 (36 KSI).
   - C. PIPE COLUMNS SHALL CONFORM TO ASTM A-53 WITH SULFUR CONTENT NOT EXCEEDING 0.05% TYP. U.N,O.
   - D. STRUCTURAL STEEL TUBING (HSS) FOR STEEL MOMENT FRAME COLUMNS PER SHEET S5.0 SHALL CONFORM TO ASTM A1085. ALL OTHER STEEL TUBING (HSS) MAY CONFORM TO ASTM A500 GRADE B OR C OR ASTM A1085, TYP UNO.
   - E. STEEL PLATES, ANGLES, BARS AND MISC. SHAPES SHALL CONFORM TO ASTM A36 (36 KSI) TYP. U.N.O. WHERE DRAWINGS SPECIFY 50 KSI, STEEL SHALL CONFORM TO ASTM A572, GR. 50. NOTE: ASTM A572, GR. 50. MAY BE SUBSTITUTED FOR ASTM A36 (36 KSI).
4. ERECTION - STRUCTURAL STEEL ERECTED TRUE, STRAIGHT, PLUMB AND TO ITS DESIGNATED LOCATIONS. FIELD CONNECTIONS BOLTED OR WELDED AS INDICATED ON THE DRAWINGS.
5. NAILS, BOLTS, SCREWS AND NUTS, ETC. - FOR EXTERIOR WORK SHALL BE CADMIUM PLATED OR GALVANIZED.
   - A. BOLTS FOR STRUCTURAL STEEL CONNECTIONS SHALL CONFORM TO ASTM A-307 UNLESS OTHERWISE NOTED. ALL HOLES FOR BOLTS THRU STEEL TO BE DRILLED, OR TORCHED PILOT HOLE AND REAMED TO DIAMETER OF BOLT +1/16" UNLESS OTHERWISE NOTED. NELSON STUDS (WELDED TO STEEL) MAY BE SUBSTITUTED FOR BOLTS SAME LENGTH AND DIAMETER.
   - B. SEE "FASTENERS FOR ATTACHMENT TO STEEL" ON SHEET N2.0 FOR SHOT PINS & SCREWS.
6. HANDRAILS - FABRICATED, AS DETAILED, NON-FILLET WELDS GROUND SMOOTH.
7. SHOP PAINT
   - A. EXPOSED STEEL COATED WITH ONE SHOP COAT OF RED OXIDE PRIMER.
   - B. ALL SURFACES THOROUGHLY CLEANED BY EFFECTIVE MEANS PRIOR TO APPLICATION OF SHOP COATS.
8. TESTS
   - A. PROVIDE MILL CERTIFICATES OR TEST ALL STEEL MEMBERS PER TITLE-24 PART 2, CCR SECTION 1705A.2 & 2202A.

SECTION 6 CARPENTRY

1. SCOPE OF WORK
   CONTRACTOR SHALL PROVIDE ALL LABOR, MATERIALS AND SERVICES TO INSTALL CARPENTRY.
2. MATERIALS
   LUMBER GRADE MARKED IN ACCORDANCE WITH AN APPROVED GRADING AGENCY PER DOC PS20-20 INCLUDING “STANDARD GRADING AND DRESSING RULES NO. 17" OF WEST COAST LUMBER INSPECTION BUREAU, OR "WESTERN LUMBER GRADING RULES", LATEST EDITION OF WESTERN WOOD PRODUCTS ASSOCIATION. OSB OR PLYWOOD GRADE MARKED IN ACCORDANCE WITH PRODUCT STANDARD PS 1-19, PS 2-19, OR PRP-108 FOR SOFTWOOD OSB OR PLYWOOD, OF THE AMERICAN PLYWOOD ASSOCIATION (APA). EACH SHEET SHALL BEAR THE STAMP OF APA, PITTSBURGH TESTING, OR TECO. MOISTURE CONTENT SHALL NOT EXCEED 19%.
   - A. JOISTS, HEADERS, PLATES, STUDS: DOUGLAS FIR S4S #2 OR HEM FIR S4S #2 MINIMUM, U.N.O. NOTE: MSR 1650 E1.5 MAY BE SUBSTITUTED FOR #2 GRADE IF IT MEETS THE STRUCTURAL REQUIREMENTS FOR FLOOR AND ROOF MEMBERS.
   - B. PSL HEADERS: TRUS JOIST PARALLAM PSL BY WEYERHAEUSER (ICC ESR-1387) OR EQUIV. MEETING THE FOLLOWING STRUCTURAL PROPERTIES:

BEAMS ≤ 7" DEEP & COLUMNS	BEAMS ≥ 9¼" DEEP
F_b = 2400 PSI MIN.	F_b = 2900 PSI MIN.
F_v = 190 PSI MIN.	F_v = 290 PSI MIN.
E = 1.8E6 PSI MIN.	E = 2.0E6 PSI MIN.

   - C. POSTS AND TIMBERS: DOUGLAS FIR S4S #1 OR HEM FIR S4S #1 MIN.
   - D. BLOCKING: DOUG FIR #3, OR HEM FIR #3, OR STD. & BET.
   - E. SILLS AND LUMBER & SHIM PLATES IN CONTACT WITH CONCRETE, MASONRY OR EARTH: DOUG FIR #2 OR HEM FIR #2 MIN. PRESSURE TREATED IN ACCORDANCE WITH CBC 2304.12.1. EACH PIECE SHALL BEAR AWPA STAMP. AWPA STANDARD U1 & T1 GROUND CONTACT, D.F. (OR H.F.) #2 ABOVE GROUND.
   - F. MOISTURE BARRIER: KRAFT WATERPROOF BUILDING PAPER, OR 15 LB. FELT, CBC SECTION 1403.2. & ASTM D226, TYPE I.
   - G. STUDS - S4S DOUG FIR #2 OR #2 HEM FIR. MAXIMUM MOISTURE CONTENT OF 19% AT TIME OF INSTALLATION.
   - H. FASTENERS - EXTERIOR USE FASTENERS EXPOSED TO THE OUTSIDE ENVIRONMENT (INCLUDING FASTENERS USED FOR THE ATTACHMENT OF EXTERIOR WALL COVERINGS) SHALL BE CORROSION RESISTANT IN ACCORDANCE WITH C.B.C. SECTION 2304.10.1.1.
   - I. BUILDING TRIM - 2x RESAWN SELECT D.F., H.F., OR CEDAR.
   - J. DOOR/WINDOW TRIM - 1x4 RESAWN D.F., H.F., OR CEDAR.
   - K. FRAMING CONNECTORS SHALL BE FROM SIMPSON CATALOG LATEST ED.
   - L. FIRE BLOCKS SHALL CONFORM TO CBC SECTION 718.2
   - M. ALL NAILS SHALL BE COMMON NAILS PER ASTM F1667 UNLESS OTHERWISE NOTED.
   - N. ALL CUT ENDS AND HOLES IN PRESSURE TREATED LUMBER SHALL BE TREATED WITH "CUPRINOL".
   - O. ALL BOLTS AND LAG SCREWS SHALL COMPLY WITH THE 2018 NATIONAL DESIGN SPECIFICATION FOR WOOD CONSTRUCTION (ANSI\AWC NDS-2018).

CARPENTRY continued

   - P. HOLES FOR BOLTS IN WOOD SHALL BE BORED WITH A BIT OF THE SAME NOMINAL DIAMETER AS THE BOLT + 1/16".
   - Q. HOLES FOR LAG SCREWS SHALL BE FIRST BORED TO THE SAME NOMINAL DIAMETER AND DEPTH AS THE SHANK. THE REMAINDER OF THE HOLE SHALL BE 40% TO 70% OF THE SHANK DIAMETER.
   - R. ALL BOLTS AND LAG SCREWS SHALL BE PROVIDED WITH METAL WASHERS UNDER HEADS AND NUTS WHICH BEAR ON WOOD.
3. WORKMANSHIP
   - A. FRAMING - SECURELY NAILED, BRIDGED AND BLOCKED TO FORM RIGID STRUCTURE. WORK CUT, FITTED AND ASSEMBLED LEVEL PLUMB AND TRUE TO LINE. TRIM IN AS LONG LENGTHS AS POSSIBLE WITH ALL STANDING TRIM IN ONE PIECE. TRIM SEALED AT ALL EDGES.
   - B. NAILING - IN ACCORDANCE WITH TITLE 24, CALIFORNIA BUILDING CODE, TABLE 2304.10.1.
   - C. EXTERIOR WALLS - FACTORY FABRICATED. CAULKING PROVIDED BETWEEN PERIMETER OF WALL AND STRUCTURAL MEMBERS PROVIDING WEATHER-PROOF AND WATER-TIGHT SEAL. NECESSARY CLOSERS, SEALS, AND FLASHINGS PLACED AT TOP AND BASE SUPPORT OF PANELS AND AROUND OPENINGS.
   - D. NAILS INTO P.T. LUMBER TO BE HOT DIPPED GALVANIZED.
   - E. MACHINE APPLIED NAILING: USE OF MACHINE NAILING IS SUBJECT TO A SATISFACTORY JOBSITE DEMONSTRATION FOR EACH PROJECT AND THE APPROVAL BY THE RDPRC AND THE DIVISION OF THE STATE ARCHITECT. THE APPROVAL IS SUBJECT TO CONTINUED SATISFACTORY PERFORMANCE. MACHINE NAILING WILL NOT BE APPROVED IN 5/16" OSB. IF NAILHEADS PENETRATE THE OUTER PLY MORE THAN WOULD BE NORMAL FOR A HAND HAMMER OR IF MINIMUM ALLOWABLE EDGE DISTANCES ARE NOT MAINTAINED THE PERFORMANCE WILL BE DEEMED UNSATISFACTORY.
   - F. MOISTURE BARRIER - APPLIED TO STUDS WEATHER-BOARD FASHION, HORIZONTAL JOINTS LAPPED MIN 6" INCLUDING BUILDING CORNERS. SHEATHING APPLIED OVER MOISTURE BARRIER.
   - G. TRIM SEALED AT ALL EDGES. SEALANT PAINTED TO MATCH TRIM OR SIDING UNLESS TRANSPARENT TYPE.

SECTION 7A SHEET METAL (NON-STRUCTURAL)

1. SCOPE OF WORK
   CONTRACTOR SHALL PROVIDE ALL LABOR, MATERIALS AND SERVICES TO INSTALL INDICATED SHEET METAL.
2. MATERIALS
   - A. SHEET METAL - STEEL SHEETS HOT DIP GALVANIZED WITH 1.25 OZ. PER SQUARE FOOT ZINC COATING CONFORMING TO ASTM A653 MINIMUM 26 GA. UNLESS OTHERWISE NOTED ON THE DRAWINGS.
   - B. SOLDER - OF STAND, GRADE "A" OF EQUAL PARTS, ARD BRAND, LEAD AND TIN ASTM B32.
   - C. FLUX - ZINC SATURATED MURIATIC ACID.
   - D. GUTTERS: 26 GA. G-90 GALV. STEEL
     DOWNSPOUTS: 2"x3" CONVOLUTED 30 GA. G-90 GALV. STEEL
     GUTTER ENDCAPS: 26 GA. G-90 GALV. STEEL
     GUTTER CLIPS: 18 GA. G-90 GALV. STEEL
     FLASHING: 22 GA. G-90 GALV. STEEL U.O.N.
   - E. FASTENERS:
     SELF-DRILLING OR SELF-TAPPING SHEET METAL SCREWS.
     LENGTH TO HAVE (3) EXPOSED THREADS MIN.
3. WORKMANSHIP
   SHEET METAL ACCURATELY FORMED TO DIMENSIONS AND SHAPES DETAILED WITH TRUE STRAIGHT LINES, CORNERS AND ANGLES. FLASHING INSTALLED IN LONGEST LENGTHS POSSIBLE. EXTERIOR WORK FORMED, FABRICATED AND INSTALLED SO THAT IT ADEQUATELY PROVIDES FOR EXPANSION AND CONTRACTION IN THE COMPLETED WORK AND FINISHES WATER AND WEATHER TIGHT. ALUMINUM SHALL BE SEPARATED FROM FERROUS METAL BY POLYETHYLENE TAPE OR FLOOD COAT OF ASPHALTIC PAINT.

SECTION 7B METAL ROOFING

1. SCOPE OF WORK
   CONTRACTOR SHALL PROVIDE ALL LABOR, MATERIALS AND SERVICES TO INSTALL METAL ROOFING.
2. MATERIALS
   - A. ROOF SHALL BE CONSTRUCTED OF 3" STANDING SEAM INTERLOCKING (UN-PENETRATED) STEEL SHEETS.
   - B. PROPERTIES INCLUDING THICKNESS SHALL BE PER SHEET S0.0.
   - C. BASE MATERIAL SHALL BE EITHER ASTM A1011 SS, GRADE 36 (Fy = 36 KSI) OR ASTM A653 SS, GRADE 37 (Fy = 37 KSI) AND SHALL BE GALVANIZED WITH G90 GALVANIZATION.
   - D. SHEETS MAY BE PAINTED.
   - E. CLASS A.
   - F. CLIP ANGLES SHALL BE HOT-DIPPED GALVANIZED.
   - G. FASTENERS SHALL BE EXTERIOR USE SCREWS WITH A CORROSION PROTECTIVE COATING PER THE "FASTENERS FOR ATTACHMENT TO STEEL" SECTION ON SHEET N2.0. ALL SCREWS USED FOR METAL ROOFING ATTACHMENT SHALL HAVE A NEOPRENE OR EPDM WASHER.

SECTION 7C SEALANT

1. SCOPE OF WORK
   CONTRACTOR SHALL PROVIDE ALL LABOR, MATERIAL AND SERVICES TO SEAL BUILDINGS.
2. MATERIALS
   VULKEM SEALANT, POLYURETHANE, MANUFACTURED BY MAMECO INTERNATIONAL FOR ROOFS. "GEOCEL" SILICONIZED CAULK, GE, DUPONT, EAGLESEAL OR DAP FOR ALL OTHER APPLICATIONS, OR EQUAL.
   - A. SEALANT V.O.C. LIMITS PER SCAQMD RULE 1168 (AS SHOWN IN TITLE 24, PART 11, TABLE 5.504.4.1 AND TABLE 5.504.4.2)
3. WORKMANSHIP
   SEALANT APPLIED TO DRY CLEAN SURFACES, WHEREVER INDICATED ON DETAILS AND AS NEEDED TO MAKE BUILDING WATERTIGHT IN ACCORDANCE WITH MANUFACTURER'S SPECIFICATIONS.

SECTION 7D SINGLE-PLY ROOFING

1. SCOPE OF WORK
   CONTRACTOR SHALL PROVIDE ALL LABOR, MATERIAL AND SERVICES TO INSTALL SINGLY-PLY OR BUILT-UP ROOFING. THE ROOFING SYSTEM SHALL WITHSTAND THE UPLIFT OF 100 MPH BASIC WIND SPEED.
2. MATERIALS
   MEMBRANE: PVC FILM LAMINATED TO BOTH SIDES OF A REINFORCEMENT FABRIC, OR EQUIV. - PROPRIETARY THERMOPLASTIC PVC FORMULATION OF RESINS, PLASTICIZERS, STABILIZERS, BIOCIDES, FLAME RETARDANTS, AND U.V. ABSORBENTS. CLASS A.
   - A. WOOD NAILERS MUST BE A #2 GRADE LUMBER, OR EQUIVALENT, TO SUBSTRATE.
3. WORKMANSHIP
   MEMBRANE APPLIED ON SUBSTRATES THAT ARE DRY, CLEAN, AND FREE OF FINS, SHARP EDGES AND LOOSE, FOREIGN MATERIALS, WHEREVER INDICATED ON DETAILS. AN INSULATION OR SLIP SHEET HAVING AN APPROVED FACER MUST BE USED WHEN ROOFING OVER ASPHALT OR COAL TAR ROOFS.
4. TESTING:
   - A. MEMBRANE SHALL BE DESIGNED TO PERFORM IN ALL TYPES OF WEATHER AND SHALL COMPLY TO ASTM D-2136 TESTING METHODS.
   - B. MEMBRANE SHALL BE DESIGNED IN ACCORDANCE TO ASTM D-4434 "STANDARD SPECIFICATIONS FOR POLY (VINYL CHLORIDE) SHEET ROOFING" AND BE CLASSIFIED AS A TYPE IV, INTERNALLY REINFORCED SHEET.

SECTION 8 HOLLOW METAL DOORS AND FRAMES

1. SCOPE OF WORK
   CONTRACTOR SHALL PROVIDE ALL LABOR, MATERIALS AND SERVICES TO INSTALL HOLLOW METAL DOORS AND FRAMES.
2. MATERIALS
   - A. DOORS - INSULATED TYPE L FULL FLUSH, MANUFACTURED BY AMWELD MANUFACTURING COMPANY, 18 GA. 1-3/4" THICK PER CS242 MIN, REINFORCE FOR HARDWARE-BOTH FACES FOR CLOSER, SOUND DEADEN INTERIOR.
   - B. FRAMES - 16 GA COLD ROLLED, 2" FACES, CS242 MIN. 3 ANCHORS PER JAMB + ADJUSTABLE FLOOR ANCHOR, EACH JAMB REINFORCE FOR HARDWARE. PROVIDE STRIKE BOX, PROVIDE SOUND DEADENING: 1/8" UNDERCOATING OR INSULATING FILL.
3. WORKMANSHIP
   ALL WORK FABRICATED IN SHOP TO REQUIRED PROFILES BY FORMING AND WELDING, WITH ARISES AND EDGES STRAIGHT, SHARP FIT FABRICATED ACCURATELY WITH SQUARE CORNERS, HAIRLINE JOINTS AND SURFACES FREE FROM WARP, WAVE, BUCKLE OR OTHER DEFECTS AFTER FABRICATION, DOORS AND FRAMES CLEANED THOROUGHLY, ALL WELDS GROUND SMOOTH AND GIVEN PRIME COAT.

SECTION 9A STUCCO (EXTERIOR PORTLAND CEMENT PLASTER)

LATHING AND PLASTERING MATERIALS AND ACCESSORIES SHALL BE MARKED BY THE MANUFACTURER'S DESIGNATION TO INDICATE COMPLIANCE WITH THE APPROPRIATE STANDARDS REFERENCED IN THIS SECTION AND STORED IN SUCH A MANNER TO PROTECT THEM FROM THE WEATHER, PER C.B.C 2507.1.

LATHING AND PLASTERING MATERIALS SHALL CONFORM TO THE STANDARDS LISTED IN C.B.C. TABLE 2507.2 AND CHAPTER 35, AND, WHERE REQUIRED FOR FIRE PROTECTION, SHALL ALSO CONFORM TO THE PROVISIONS OF CHAPTER 7.

GYPSUM BOARD AND GYPSUM PLASTER CONSTRUCTION SHALL BE OF THE MATERIALS LISTED IN C.B.C. TABLES 2506.2 AND 2507.2. THESE MATERIALS SHALL BE ASSEMBLED AND INSTALLED IN COMPLIANCE WITH THE APPROPRIATE STANDARDS LISTED IN TABLES 2508.1 AND 2511.1, AND CHAPTER 35 (PER 2508.1).

WATER-RESISTIVE BARRIERS SHALL BE IN ACCORDANCE WITH C.B.C. SECTION 2510.6. WATER-RESISTIVE BARRIERS SHALL BE INSTALLED AS REQUIRED PER SECTION 1404.2, AND WHERE APPLIED OVER WOOD-BASED SHEATHING, SHALL INCLUDE A WATER-RESISTIVE VAPOR-PERMEABLE BARRIER WITH A PERFORMANCE AT LEAST EQUIVALENT TO TWO LAYERS OF GRADE D PAPER.

EXCEPTION: WHERE THE WATER-RESISTIVE BARRIER THAT IS APPLIED OVER WOOD-BASED SHEATHING HAS A WATER RESISTANCE EQUAL TO OR GREATER THAN THAT 60-MINUTE GRADE D PAPER COMPLYING WITH ASTM E 2556, TYPE II AND IS SEPARATED FROM THE STUCCO BY AN INTERVENING, SUBSTANTIALLY NONWATER-ABSORBING LAYER OR DRAINAGE SPACE.

1. PLASTER NOTES: PLASTERING WITH CEMENT PLASTER SHALL NOT BE LESS THAN THREE COATS WHEN APPLIED OVER METAL LATH OR WIRE FABRIC LATH AND SHALL NOT BE LESS THAN TWO COATS WHEN APPLIED OVER MASONRY CONCRETE OR GYPSUM BACKING AS SPECIFIED IN SECTION 2510.5.
   - A. THE FIRST COAT SHALL BE MIN. 3/8" THICK & APPLIED WITH SUFFICIENT MATERIAL AND PRESSURE TO FILL SOLIDLY ALL OPENINGS IN THE LATH. THE SURFACE SHALL BE SCORED HORIZONTALLY SUFFICIENTLY ROUGH TO PROVIDE ADEQUATE BOND TO RECEIVE THE SECOND COAT.
   - B. THE SECOND COAT SHALL BE BROUGHT OUT TO MIN. 3/8" THICKNESS, RODDED AND FLOATED SUFFICIENTLY ROUGH TO PROVIDE ADEQUATE BOND FOR THE FINISH COAT. THE SECOND COAT SHALL HAVE NO VARIATION GREATER TO THAN 1/4 INCH (6.4 mm) IN ANY DIRECTION UNDER 5-FOOT STRAIGHT EDGE.
   - C. THE FINISH COATS SHALL BE MIN. 1/8" THICK & APPLIED OVER BASE COATS THAT HAVE BEEN IN PLACE FOR THE TIME PERIODS SET FORTH IN ASTM C 926. THE THIRD OR FINISH COAT SHALL BE APPLIED WITH SUFFICIENT MATERIAL AND PRESSURE TO BOND TO AND TO COVER THE BROWN COAT AND SHALL BE OF SUFFICIENT THICKNESS TO CONCEAL THE BROWN COAT.

SECTION 9B PAINTS & COATINGS

1. SCOPE OF WORK.
   CONTRACTOR SHALL PROVIDE ALL LABOR, MATERIALS AND SERVICES TO PAINT BUILDING. ALL EXPOSED SURFACES OF BUILDING AND RAMPS SHALL BE PAINTED EXCEPT ALUMINUM WINDOW FRAMES, THRESHOLDS, AND ROOFING.
2. MATERIALS
   - A. FOR EXTERIOR WOOD:

REF.BRAND	DUNN EDWARDS	KELLY MOORE	SHERWIN WILLIAMS	SINCLAIR
PRIMER	42-9M	1240	Y24W20	289-N
FINISH	QD-60-XX	1240-XXX	B54WZ102	GE2-NXX

   - B. FOR INTERIOR TRIM:

REF.BRAND	DUNN EDWARDS	KELLY MOORE	SHERWIN WILLIAMS	SINCLAIR
FINISH	W450-XX	1650-XXX	A26W11	40XX

   - C. FOR METAL:

REF.BRAND	DUNN EDWARDS	KELLY MOORE	SHERWIN WILLIAMS	SINCLAIR
PRIMER	43-4	1710	B50NZ6	15N
FINISH	10-XX	1700-XXX	B54WZ102	GE2-NXX

   - D. INTERIOR PAINT & COATINGS SHALL COMPLY WITH TITLE 24, PART 11, "CAL-GREEN" SECTION 5.504.4.3, AND V.O.C. LIMITS PER TABLE 5.504.4.3.
3. WORKMANSHIP
   ALL EXPOSED SURFACES SHALL BE PAINTED EXCEPT ALUMINUM WINDOW FRAMES, THRESHOLDS AND METAL ROOFING. MATERIAL SHALL BE OF THE GRADE SPECIFIED OR EQUAL.
   - A. EXTERIOR WOOD SIDING, TRIM AND SKIRTING - FLAT OR SEMI-GLOSS LATEX. APPLY ONE COAT OF PRIME AND AT LEAST ONE FINISH COAT. PRIME COAT SHALL BE BRUSHED ON OR SPRAYED AND BACK BRUSHED INTO ALL GROOVES IN THE SIDING. IF NECESSARY, IN THE OPINION OF THE INSPECTOR, AN EXTRA COAT SHALL BE APPLIED TO ALL GROOVES SO THAT THE FINISH COAT WILL HAVE A UNIFORM APPEARANCE. ALLOW PRIME COAT TO DRY ACCORDING TO MANUFACTURER'S RECOMMENDATION. PRIME AND FINISH COATS SHALL BE COMPATIBLE AND MANUFACTURED BY THE SAME COMPANY.
   - B. INTERIOR TRIM - TRIM NOT PRE-COATED SHALL BE PAINTED WITH TWO COATS OF SEMI-GLOSS LATEX OVER PRIMER.
   - C. INTERIOR HARDWOOD CABINETS - TWO COATS LOW LUSTER POLYURETHANE FINISH. APPLY FIRST COAT THINNED WITH ONE QUART MINERAL SPIRITS PER GALLON. APPLY SECOND COAT AS RECOMMENDED BY MANUFACTURER.
   - D. METAL - ALL METAL SURFACES SHALL BE PAINTED WITH TWO COATS OF ALKYD FINISH COAT OVER ZINC CHROMATE OR EQUAL RUST INHIBITING PRIMER.
   - E. RAMP - ONE COAT OF FERROX NON-SLIP (0.8 MIN. C.O.F.) SURFACING AS MANUFACTURED BY AMERICAN ABRASIVE METALS OR COMPARABLE. ALL PAINTS OF THE TYPE INDICATED SHALL BE LISTED ON THE STATE OF CALIFORNIA QUALIFIED PRODUCTS LIST, OR EQUAL.
   - F. SUBMIT ONE SET OF COLOR SAMPLES TO THE RDPRC FOR EACH PRODUCT TO ASSIST IN SELECTION.

SECTION 9C INTERIOR AIR QUALITY CONTROL

THE INTERIOR ENVIRONMENT SHALL BE ASSEMBLED WITH PRODUCTS THAT CONTRIBUTE TO A HEALTHY INDOOR AIR QUALITY (IAQ). THE FOLLOWING SHALL COMPLY TITLE 24, PART 11 ("CAL-GREEN"):
1. ADHESIVES, SEALANTS, CAULKS — SECTION 5.504.4.1
2. PAINTS, COATINGS — SECTION 5.504.4.3
3. AEROSOL PAINTS & COATINGS — SECTION 5.504.4.3.1
4. CARPET SYSTEMS — SECTION 5.504.4.4
   - A. CARPET SHALL MEET CRI'S "GREEN LABEL PLUS" PROGRAM, NSF/ANSI '140 GOLD' LEVEL, OR OTHER APPROVED TESTING PER 5.504.4.4.
5. CARPET CUSHION OR PAD — SECTION 5.504.4.4.1
   - A. CUSHION/PAD SHALL MEET THE CRI'S "GREEN LABEL" PROGRAM.
6. CARPET ADHESIVE — SECTION 5.504.4.4.2
   - A. ADHESIVES SHALL MEET THE REQUIREMENTS OF TABLE 5.504.4.1.
7. COMPOSITE WOOD PRODUCTS — SECTION 5.504.4.5
   - A. ALL COMPOSITE WOODS MUST NOT EXCEED THE FORMALDEHYDE LIMITS AS SPECIFIED IN ARB'S "AIR TOXICS CONTROL MEASURE" (17 CCR 93120), OR NON-EXEMPT MATERIALS PER TABLE 5.504.4.5.
8. RESILIENT FLOORING SYSTEMS — SECTION 5.504.4.6
   - A. RESILIENT FLOORING SHALL BE CERTIFIED UNDER THE "FLOORSCORE" PROGRAM BY RFCI, COMPLY WITH CA-CHPS, OR OTHER APPROVED TESTING PER 5.504.4.6.
9. HVAC FILTER (MERV RATING OF 13 AND MINIMUM 2-INCH DEPTH) SECTION 5.504.5.3.1
   - A. SEE SHEET M1.7 FOR HVAC FILTER REQUIREMENTS

SECTION 13 SITE ASSEMBLY

1. SCOPE OF WORK
   CONTRACTOR SHALL PROVIDE ALL LABOR MATERIALS AND SERVICES TO PREPARE THE BUILDING ELEMENTS, TRANSPORT THEM FROM THE PLANT TO THE SITE AND TO COMPLETE THE ASSEMBLY AT THE SITE. THE CONDITION OF THE SITE, SUCH AS DRAINAGE AND SOIL BEARING CAPACITY, SHALL BE THE RESPONSIBILITY OF THE SCHOOL DISTRICT. UNLESS SPECIFICALLY CALLED FOR IN THE CONTRACT, STEPS, RAMPS, OR HANDRAILS SHALL BE THE RESPONSIBILITY OF THE CONTRACTOR.
2. ASSEMBLY OF ELEMENTS
   - A. IN A LOCATION ON THE SITE AS DETERMINED BY THE SCHOOL DISTRICT, (APPROVED BY DSA) THE CONTRACTOR SHALL PLACE WOOD LEVELING STRIPS OR OTHER SUITABLE SUPPORTS AS DETAILED ON THE DRAWINGS.
   - B. THE ELEMENTS SHALL BE BROUGHT TO THE SITE ON WHEEL ASSEMBLY AND TRANSFERRED TO THE PREPARED SITE. GREAT CARE SHALL BE TAKEN TO AVOID DAMAGE TO THE ELEMENTS BY RACKING OR BUMPING EACH OTHER.
   - C. CONNECTION OF THE ELEMENTS TOGETHER SHALL BE DONE ACCORDING TO INSTRUCTION ON THE DRAWINGS. FLASHINGS, TRIM AND OTHER LOOSE ITEMS SHALL BE INSTALLED PER DETAILS ON THE DRAWINGS.

SECTION 23 AIR CONDITIONING

1. SCOPE OF WORK (SEE SHEET M1.7 FOR HVAC SPEC. AND NOTES)
   CONTRACTOR SHALL PROVIDE ALL LABOR, MATERIALS AND SERVICES TO INSTALL THE AIR CONDITIONING SYSTEM AS SHOWN ON THE DRAWINGS AND SPECIFICATIONS, INCLUDING A/C UNITS AND ACCESSORIES, REMOTE THERMOSTAT, GRILLS AND POWER WIRING COMPLETE TO LOAD CENTER. CONTRACTOR SHALL INSTRUCT OWNER'S OPERATORS ON OPERATION AND MAINTENANCE OF A/C SYSTEM.
2. EQUIPMENT
   SEE NOTE ON FLOOR PLAN FOR SIZE AND TYPE.
3. WORKMANSHIP
   UNITS SHALL BE INSTALLED COMPLETE AND OPERATING WITH ALL ACCESSORIES IN ACCORDANCE WITH THE MANUFACTURER'S INSTRUCTIONS.

SECTION 26 ELECTRICAL

1. SCOPE OF WORK
   - A. CONTRACTOR SHALL PROVIDE ALL LABOR, MATERIALS AND SERVICES FOR ELECTRICAL INSTALLATION COMPLETE WITH ASSOCIATED EQUIPMENT AND FIXTURES, IN OPERATING CONDITION READY FOR USE. THE WORK INCLUDES: LIGHT AND POWER SYSTEMS, LIGHTING FIXTURES COMPLETE WITH LAMPS, CONNECTIONS AND DISCONNECTS TO A/C EQUIPMENT, EMERGENCY VOICE ALARM COMMUNICATION SYSTEMS (EVACS).
   - B. PROVIDE CONDUIT WITH PULL STRINGS AND JUNCTION BOXES FOR AUTOMATIC DETECTION FIRE ALARM SYSTEM AND NOTIFICATION PER NFPA 72.
2. MATERIALS
   ALL NEW COMPLYING WITH REQUIREMENTS OF CALIFORNIA ELECTRIC CODE.
   - A. ELECTRIC METALLIC TUBING - COUPLING AND FLEX CONDUIT GALVANIZED OR SHERARDIZED. EXTERIOR FLEX-GALV. STEEL WITH FACTORY APPLIED P.V.C. JACKET.
   - B. PANEL BOARDS - FLUSH MOUNTED.
   - C. CONDUCTORS - COPPER, INSULATED FOR 600 VOLTS, TYPE THHN FOR SIZES #12 TO #6, TYPE THW FOR LARGER SIZES. MINIMUM SIZE-#14.
   - D. RECEPTACLES - AS NOTED. +18" A.F.F. MIN. TO BOTTOM OF BOX
   - E. CLOCK RECEPTACLE - AS NOTED.
   - F. SWITCHES - AS NOTED. +48" A.F.F. MAX. TO TOP OF BOX
   - G. LIGHTING FIXTURES - AS NOTED ON THE DRAWINGS.
3. WORKMANSHIP
   MATERIALS AND EQUIPMENT INSTALLED IN A SECURE, NEAT, WORKMANLIKE MANNER IN ACCORDANCE WITH CODE REQUIREMENTS. PANEL BOARD CARDS SHALL BE FILLED OUT. CONDUIT AND CABLE INSTALLED IN WALL AND CEILING SPACES. WORK PIERCING WATERPROOFED AREAS FLASHED AND SEALED TO A WATERTIGHT CONDITION. BUILDING CONDUIT/WIRING FROM FACE OF BUILDING TO SITE TERMINATION BY SITE CONTRACTOR (N.I.C.). (FLEXIBLE CONDUIT S-BEND SEALTITE).

INSPECTION

INSPECTION OF PREFABRICATED BUILDINGS IS DIVIDED INTO TWO SEPARATE FUNCTIONS:

1. IN-PLANT INSPECTION.
2. ON-SITE INSPECTION.

THE CONTRACTOR SHALL ALLOW UP TO SEVEN (7) DAYS FROM THE DATE OF PLAN APPROVAL TO OBTAIN AN IN-PLANT INSPECTOR APPROVED BY D.S.A.

IN-PLANT INSPECTION AND MATERIAL TESTING SHALL BE ACCOMPLISHED UNDER THE SUPERVISION OF THE DISTRICT ARCHITECT. THE CONTRACTOR SHALL NOTIFY THE DISTRICT ARCHITECT, DSA, AND THE DESIGNATED INSPECTOR/INSPECTION AGENCY AT LEAST 48 HOURS PRIOR TO COMMENCING WORK. THE MANUFACTURER SHALL PROVIDE THE INSPECTOR WITH FULL ACCESS TO ALL PLANT OPERATIONS INVOLVING WORK UNDER THIS CONTRACT AND SHALL ADVISE THE INSPECTOR IN ADVANCE OF THE TIME AND PLACE OF OPERATIONS THAT THE INSPECTOR WANTS TO OBSERVE TAKE PLACE. BEFORE THE BUILDING(S) ARE REMOVED FROM THE PLANT FOR DELIVERY TO THE STORAGE FACILITY, OR FROM THE STORAGE FACILITY TO THE SITE, THE INSPECTOR SHALL DETERMINE THAT THEY ARE ACCEPTABLE AND ISSUE A WRITTEN RELEASE WHICH SHALL BE IN THE FORM OF A VERIFIED REPORT (FORM DSA 152-IPI).

A COPY OF THE INSPECTOR'S VERIFIED REPORT SHALL ACCOMPANY EACH BUILDING TO STORAGE OR TO THE SITE. THE INSPECTOR SHALL PUT ONE COPY IN EACH BUILDING.

IDENTIFICATION STAMP
DIV. OF THE STATE ARCHITECT
APP: 03-124589 INC:
REVIEWED FOR
SS ☑ FLS ☑ ACS ☑
DATE: 04/15/2025

American Modular Systems
787 Spreckels Ave., Manteca, CA 95336
Phone (209) 825-1921 Fax (209) 825-7018
www.americanmodular.com

INTELLECTUAL-PROPERTY & PROPRIETARY RIGHTS STATEMENT
COPYRIGHT © AMERICAN MODULAR SYSTEMS (AMS)
AMS OWNS ALL COPYRIGHT AND OTHER INTELLECTUAL-PROPERTY AND PROPRIETARY RIGHTS IN THESE DRAWINGS, SPECIFICATIONS, AND THE MATERIAL CONTAINED HEREIN. CERTAIN ELEMENTS SHOWN IN THESE DOCUMENTS ARE REGISTERED TRADEMARKS OF AMS. ALL PATENTABLE MATERIALS CONTAINED IN THESE DOCUMENTS AND ORIGINATING WITH AMS WILL REMAIN THE SOLE PROPERTY OF AMS. THESE DRAWING, SPECIFICATIONS, AND THE MATERIAL CONTAINED HEREIN MAY NOT BE REPRODUCED, TRANSMITTED, COPIED, DISTRIBUTED, MODIFIED, OR OTHERWISE DISPOSED OF (DIRECTLY OR INDIRECTLY) AND MAY NOT BE USED (IN WHOLE OR IN PART) TO ASSIST IN THE CONSTRUCTION, DESIGN, OR OTHER MAKING OF, OR FOR THE PURPOSE OF FURNISHING ANY INFORMATION FOR THE CONSTRUCTION, DESIGN, OR OTHER MAKING OF, ANY BUILDINGS (MODULAR OR OTHERWISE), DRAWINGS, SPECIFICATIONS, PRINTS, APPARATUS, OR PARTS THEREOF, EXCEPT AS EXPRESSLY PERMITTED BY WRITTEN CONSENT OF, OR IN A WRITTEN AGREEMENT WITH, AMS. SUBMITTAL OR DISTRIBUTION TO MEET OFFICIAL REGULATORY REQUIREMENTS WILL NOT BE CONSTRUED AS PUBLICATION IN DEROGATION OF AMS'S COPYRIGHT OR OTHER INTELLECTUAL-PROPERTY OR PROPRIETARY RIGHTS.

PRE-CHECKED SET NAME
24' x 40' THRU 120' x 40' STANDARD MODULAR BUILDING (HIGH SEISMIC)
FORM

SITE SPECIFIC PROJECT NAME
VENTURA COLLEGE
(1) 72'x40' BUILDING

APPROVED
DIV. OF THE STATE ARCHITECT
APP: 04-122051 PC
REVIEWED FOR
SS ☑ FLS ☑ ACS ☑ CG ☑
DATE: 04/03/2024

☒ 2022 CBC PRE-CHECK (PC) DOCUMENT
A SEPARATE PROJECT APPLICATION FOR CONSTRUCTION IS REQUIRED.

MANUFACTURER PROFESSIONAL OF RECORD ON PC

LICENSED ARCHITECT
RANDAL PATRICK CAVANAGH
No. C12631
Ren. 3-31-25
STATE OF CALIFORNIA

THESE DRAWINGS ARE PRELIMINARY AND NOT FOR CONSTRUCTION UNLESS STAMPED & SIGNED BY THE DESIGN PROFESSIONAL OF RECORD.

REVISIONS
1
2
3
4

DRAWN BY:	AA
SCALE:	AS NOTED
DATE:	MM/DD/YY
PROJECT NO:	XXXX-22

SHEET TITLE:
GENERAL NOTES & SPECIFICATIONS

SHEET NUMBER:
N1.0

☐ DEFAULT CONCRETE MIX DESIGN REQUIREMENTS FOR BELOW GRADE NORMAL WEIGHT CONCRETE [1]

BELOW GRADE CONCRETE ELEMENT	MAXIMUM W/C RATIO	MINIMUM 28-DAY STRENGTH (f'_c) (PSI)	CEMENTITIOUS MATERIALS (CEMENT TYPE PER ASTM C150)	TARGET AIR CONTENT (%)		
				MAX AGGREGATE SIZE (IN)	☐ CONCRETE NOT EXPOSED TO FREEZING-AND-THAWING CYCLES	☐ CONCRETE EXPOSED TO FREEZING-AND-THAWING CYCLES
FOUNDATIONS [2]	0.45	4500	V	1" ± ¾"	N/A	6
FOUNDATION VENTS & ACCESS WELLS	0.45	4500	V	3/8"	N/A	7.5
				1/2"	N/A	7
				1" ± ¾"	N/A	6

[1] PROPORTIONING OF CONCRETE MIXTURES SHALL BE IN ACCORDANCE WITH ACI 318-19, SECTION 26.4.3.
DOCUMENTATION OF CONCRETE MIXTURE CHARACTERISTICS SHALL BE IN ACCORDANCE WITH ACI 318-19, SECTION 26.4.4.
CEMENT SHALL BE CERTIFIED PER TITLE 24, PART 2, SECTION 1910A.1.
SEE CONCRETE NOTES ON SHEET N1.0 FOR ADDITIONAL REQUIREMENTS.

[2] FOUNDATIONS CONSERVATIVELY DESIGNED FOR A MIMINUM 28-DAY CONCRETE STRENGTH OF 3,500 PSI.

☒ OPTIONAL SITE-SPECIFIC CONCRETE MIX DESIGN REQUIREMENTS FOR BELOW GRADE NORMAL WEIGHT CONCRETE [1]

(MOST RESTRICTIVE REQUIREMENTS FROM EXPOSURE TABLES BELOW)

BELOW GRADE CONCRETE ELEMENT	MAXIMUM W/C RATIO	MINIMUM 28-DAY STRENGTH (f'_c) (PSI)	CEMENTITIOUS MATERIALS (CEMENT TYPE PER ASTM C150)	MAX AGGREGATE SIZE (IN)	TARGET AIR CONTENT (%)	MAXIMUM WATER-SOLUBLE CHLORIDE ION (Cl-) CONTENT IN CONCRETE, PERCENT BY WEIGHT OF CEMENT
FOUNDATIONS [2]	0.55	3500	I OR II	1" ± ¾"	N/A	0.30
FOUNDATION VENTS & ACCESS WELLS	0.55	3000	I OR II	3/8"	N/A	0.30
				1/2"	N/A	
				1" ± ¾"	N/A	

[1] PROPORTIONING OF CONCRETE MIXTURES SHALL BE IN ACCORDANCE WITH ACI 318-19, SECTION 26.4.3.
DOCUMENTATION OF CONCRETE MIXTURE CHARACTERISTICS SHALL BE IN ACCORDANCE WITH ACI 318-14, SECTION 26.4.4.
CEMENT SHALL BE CERTIFIED PER TITLE 24, PART 2, SECTION 1910A.1.
SEE CONCRETE NOTES ON SHEET N1.0 FOR ADDITIONAL REQUIREMENTS.

[2] FOUNDATIONS HAVE BEEN DESIGNED FOR THE WORST CASE MIMINUM 28-DAY CONCRETE STRENGTH OF 3,500 PSI.

EXPOSURE CATEGORY: FREEZING & THAWING (F)

(ACI 318-19, SECTION 19.3)

EXPOSURE CLASS [1]		CONDITION	MAXIMUM W/C RATIO	MINIMUM 28-DAY STRENGTH (f'_c) (PSI)		AIR CONTENT	
				FOUNDATIONS	FOUNDATION VENTS & ACCESS WELLS	MAX AGGREGATE SIZE (IN) [2]	TARGET AIR CONTENT (%)
☒	F0	CONCRETE NOT EXPOSED TO FREEZING-AND-THAWING CYCLES	0.55	3500	3000	N/A	
☐	F1	CONCRETE EXPOSED TO FREEZING-AND-THAWING CYCLES WITH LIMITED EXPOSURE TO WATER	0.55	3500	3500	3/8 1/2 3/4 1 1½	6 5.5 5 4.5 4.5
☐	F2	CONCRETE EXPOSED TO FREEZING-AND-THAWING CYCLES WITH FREQUENT EXPOSURE TO WATER	0.45	4500	4500	3/8 1/2 3/4 1 1½	7.5 7 6 6 5.5
☐	F3	CONCRETE EXPOSED TO FREEZING-AND-THAWING CYCLES WITH FREQUENT EXPOSURE TO WATER AND EXPOSURE TO DEICING CHEMICALS	0.40	5000	5000		

[1] IF EXPOSURE CLASS IS UNCERTAIN, F2 MAY BE ASSUMED.

[2] SEE CONCRETE NOTES ON SHEET N1.0 FOR MAX AGGREGATE SIZES.

EXPOSURE CATEGORY: SULFATE (S)

(ACI 318-19, SECTION 19.3)

EXPOSURE CLASS [1]		CONDITION		MAXIMUM W/C RATIO	MINIMUM 28-DAY STRENGTH (f'_c) (PSI)		CEMENTITIOUS MATERIALS (CEMENT TYPE PER ASTM C150)
		WATER-SOLUBLE SULFATE (SO_4^{2-}) IN SOIL, PERCENT BY MASS [2]	DISSOLVED SULFATE (SO_4^{2-}) IN WATER, PPM [3]		FOUNDATIONS	FOUNDATION VENTS & ACCESS WELLS	
☒	S0	$SO_4^{2-} < 0.10$	$SO_4^{2-} < 150$	0.55	3500	3000	I OR II
☐	S1	$0.10 \le SO_4^{2-} < 0.20$	$150 \le SO_4^{2-} < 1500$ OR SEAWATER	0.50	4000	4000	II
☐	S2	$0.20 \le SO_4^{2-} \le 2.00$	$1500 \le SO_4^{2-} \le 10{,}000$	0.45	4500	4500	V
☐	S3	$SO_4^{2-} > 2.00$	$SO_4^{2-} > 10{,}000$	0.45	4500	4500	V PLUS FLYASH OR SLAG CEMENT [4]

[1] IF EXPOSURE CLASS IS UNKNOWN, S2 MAY BE ASSUMED.

[2] PERCENT SULFATE BY MASS IN SOIL SHALL BE DETERMINED BY ASTM C1580.

[3] CONCENTRATION OF DISSOLVED SULFATES IN WATER, IN PPM, SHALL BE DETERMINED BY ASTM D516 OR ASTM D4130.

[4] PER ACI 318-14, TABLE 19.3.2.1, FOOTNOTE 6, THE AMOUNT OF THE SPECIFIC SOURCE OF THE POZZOLAN OR SLAG CEMENT TO BE USED SHALL BE AT LEAST THE AMOUNT THAT HAS BEEN DETERMINED BY SERVICE RECORD TO IMPROVE SULFATE RESISTANCE WHEN USED IN CONCRETE CONTAINING TYPEV CEMENT. ALTERNATIVELY, THE AMOUNT OF THE SPECIFIC SOURCE OF THE POZZOLAN OR SLAG CEMENT TO BE USED SHALL BE AT LEAST THE AMOUNT TESTED IN ACCORDANCE WITH ASTM C1012 AND MEETING THE CRITERIA IN ACI 318-14, SECTION 26.4.2.2(c). SEE CONCRETE NOTES ON SHEET N1.0 FOR ADDITIONAL REQUIREMENTS.

EXPOSURE CATEGORY: IN CONTACT WITH WATER (W)

(ACI 318-19, SECTION 19.3)

EXPOSURE CLASS		CONDITION	MAXIMUM W/C RATIO	MINIMUM 28-DAY STRENGTH (f'_c) (PSI)		ADDITIONAL REQUIREMENTS
				FOUNDATIONS	FOUNDATION VENTS & ACCESS WELLS	
☒	W0	CONCRETE DRY IN SERVICE OR CONCRETE IN CONTACT WITH WATER AND LOW PERMEABILITY IS NOT REQUIRED	0.55	3500	3000	NONE
☐	W1 [1]	CONCRETE IN CONTACT WITH WATER AND LOW PERMEABILITY IS REQUIRED	0.50	4000	4000	NONE

[1] EXPOSURE CLASS W1 IS ONLY REQUIRED IF CONCRETE IS BELOW THE GROUNDWATER TABLE.

EXPOSURE CATEGORY: CORROSION PROTECTION OF REINFORCEMENT (C)

(ACI 318-19, SECTION 19.3)

EXPOSURE CLASS		CONDITION	MAXIMUM W/C RATIO	MINIMUM 28-DAY STRENGTH (f'_c) (PSI)		MAXIMUM WATER-SOLUBLE CHLORIDE ION (CI) CONTENT IN CONCRETE, PERCENT BY WEIGHT OF CEMENT
				FOUNDATIONS	FOUNDATION VENTS & ACCESS WELLS	
☒	C1	CONCRETE EXPOSED TO MOISTURE BUT NOT TO AN EXTERNAL SOURCE OF CHLORIDES	0.55	3500	3000	0.30
☐	C2	CONCRETE EXPOSED TO MOISTURE AND AN EXTERNAL SOURCE OF CHLORIDES FROM DEICING CHEMICALS, SALT, BRACKISH WATER, SEAWATER, OR SPRAY FROM THESE SOURCES	0.40	5000	5000	0.15

SHEET NOTES:

1. THE DEFAULT CONCRETE MIX DESIGN REQUIREMENTS MAY BE SELECTED AND USED TO DETERMINE THE CONCRETE MIX REQUIREMENTS FOR ANY SITE PER DSA IR PC-2 SECTION 5.5 OR PC-6 SECTION 5.5.
2. THE DEFAULT CONCRETE MIX DESIGN REQUIREMENTS MAY BE SELECTED REGARDLESS OF WHETHER A SITE SPECIFIC GEOTECHNICAL REPORT EXISTS FOR THE SITE.
3. IF THE SITE CONDITIONS FOR THE SOIL ARE KNOWN AS REPORTED BY A GEOTECHNICAL OR OTHER APPROVED SOIL CONDITIONS REPORT, THE OPTIONAL SITE-SPECIFIC CONCRETE MIX DESIGN REQUIREMENTS MAY BE UTILIZED.
4. IF THE OPTIONAL SITE-SPECIFIC CONCRETE MIX DESIGN REQUIREMENTS ARE UTILIZED, THE REPORT MUST BE REFERENCED ON THE COVER SHEET OF THIS DRAWING PACKAGE.

IDENTIFICATION STAMP
DIV. OF THE STATE ARCHITECT
APP: 03-124589 INC:
REVIEWED FOR
SS ☑ FLS ☑ ACS ☑
DATE: 04/15/2025

AMS®
American Modular Systems
787 Spreckels Ave., Manteca, CA 95336
Phone (209) 825-1921 Fax (209) 825-7018
www.americanmodular.com

INTELLECTUAL-PROPERTY & PROPRIETARY RIGHTS STATEMENT
COPYRIGHT © AMERICAN MODULAR SYSTEMS (AMS)
AMS OWNS ALL COPYRIGHT AND OTHER INTELLECTUAL-PROPERTY AND PROPRIETARY RIGHTS IN THESE DRAWINGS, SPECIFICATIONS, AND THE MATERIAL CONTAINED HEREIN. CERTAIN ELEMENTS SHOWN IN THESE DOCUMENTS ARE REGISTERED TRADEMARKS OF AMS. ALL PATENTABLE MATERIALS CONTAINED IN THESE DOCUMENTS AND ORIGINATING WITH AMS WILL REMAIN THE SOLE PROPERTY OF AMS. THESE DRAWINGS, SPECIFICATIONS, AND THE MATERIAL CONTAINED HEREIN MAY NOT BE REPRODUCED, TRANSMITTED, COPIED, DISTRIBUTED, MODIFIED, OR OTHERWISE DISPOSED OF (DIRECTLY OR INDIRECTLY) AND MAY NOT BE USED (IN WHOLE OR IN PART) TO ASSIST IN THE CONSTRUCTION, DESIGN, OR OTHER MAKING OF, OR FOR THE PURPOSE OF FURNISHING ANY INFORMATION FOR THE CONSTRUCTION, DESIGN, OR OTHER MAKING OF, ANY BUILDINGS (MODULAR OR OTHERWISE), DRAWINGS, SPECIFICATIONS, PRINTS, APPARATUS, OR PARTS THEREOF, EXCEPT AS EXPRESSLY PERMITTED BY WRITTEN CONSENT OF, OR IN A WRITTEN AGREEMENT WITH, AMS. SUBMITTAL OR DISTRIBUTION TO MEET OFFICIAL REGULATORY REQUIREMENTS WILL NOT BE CONSTRUED AS PUBLICATION IN DEROGATION OF AMS'S COPYRIGHT OR OTHER INTELLECTUAL-PROPERTY OR PROPRIETARY RIGHTS.

PRE-CHECKED SET NAME
24' x 40' THRU 120' x 40'
STANDARD MODULAR BUILDING
(HIGH SEISMIC)
FORM®

SITE SPECIFIC PROJECT NAME
VENTURA COLLEGE
(1) 72'x40' BUILDING

APPROVED
DIV. OF THE STATE ARCHITECT
APP: 04-122051 PC
REVIEWED FOR
SS ☑ FLS ☑ ACS ☑ CG ☑
DATE: 04/03/2024

☒ 2022 CBC PRE-CHECK (PC) DOCUMENT
A SEPARATE PRE-SITE AND CAMPUS CONSTRUCTION IS REQUIRED

MANUFACTURER PROFESSIONAL OF RECORD ON PC

LICENSED ARCHITECT
PATRICK O'HIGH
No. C12831
Exp. 3-31-25
STATE OF CALIFORNIA

THESE DRAWINGS ARE PRELIMINARY AND NOT FOR CONSTRUCTION UNLESS STAMPED & SIGNED BY THE DESIGN PROFESSIONAL OF RECORD.

REVISIONS
1.
2.
3.
4.

DRAWN BY:	AA
SCALE:	AS NOTED
DATE:	MM/DD/YY
PROJECT NO:	XXXX-22

SHEET TITLE:
BELOW GRADE CONCRETE MIX DESIGN REQUIREMENTS

SHEET NUMBER:
N1.0A

COORDINATION OF WORK

THE CONTRACTOR IS RESPONSIBLE FOR MAKING ALL NECESSARY ARRANGEMENTS WITH THE SCHOOL DISTRICT AUTHORIZED REPRESENTATIVE FOR ACCESS TO GROUNDS AND REMOVAL OF EQUIPMENT, IF NECESSARY. THIS CONTACT SHALL BE MADE AT LEAST 48 HOURS PRIOR TO DELIVERY OF ANY MODULE. ON-SITE INSPECTION SHALL BE DONE BY THE SITE INSPECTOR. ALL WORK WHICH THE MANUFACTURER OR HIS SUBCONTRACTORS PERFORM AT THE SITE SHALL BE SUBJECT TO THE INSPECTION OF THE SITE INSPECTOR. THE MANUFACTURER WILL FURNISH THE SITE INSPECTOR WITH SUCH INFORMATION AS MAY BE NECESSARY TO KEEP HIM FULLY INFORMED AS TO PROGRESS OF WORK AND DATES WHEN SITE WORK WILL OCCUR. THE CONTRACTOR SHALL NOTIFY THE INSPECTION AGENCY AT LEAST 48 HOURS PRIOR TO COMMENCING WORK.

THE CONTRACTOR SHALL VERIFY THAT THE DISTRICT'S SITE IS READY TO RECEIVE THE CLASSROOM(S) PRIOR TO THE DELIVERY OF ANY CLASSROOM(S) BY VISITING EACH SITE (THIS MAY BE DONE BY THE INSPECTOR).

MATERIALS AND WORKMANSHIP

1. ALL CONTRACTORS SHALL CERTIFY THAT NO ASBESTOS-CONTAINING BUILDING MATERIALS WHICH EXCEED STATE AND FEDERAL MANDATED SAFE ASBESTOS LEVELS HAVE BEEN USED IN THE CONSTRUCTION OF RELOCATABLE FACILITIES.
2. ALL WORKMEN SHALL BE SKILLED AND QUALIFIED FOR THE WORK WHICH THEY PERFORM. ALL MATERIALS USED, UNLESS OTHERWISE SPECIFIED, SHALL BE NEW AND OF THE TYPES AND GRADES SPECIFIED. THE CONTRACTOR SHALL, IF REQUESTED, FURNISH EVIDENCE SATISFACTORY TO THE RDPRC THAT SUCH IS THE CASE.
3. CONTRACTOR'S CREWS ASSIGNED TO ANY WORK PERFORMED UNDER THIS CONTRACT SHALL INCLUDE ONE COMPETENT AND FULLY EXPERIENCED PERSON DESIGNATED AS THE RESPONSIBLE PERSON IN CHARGE. SUCH PERSON MUST BE IDENTIFIED BY NAME TO THE DISTRICT IN ADVANCE OF ANY WORK. UPON REQUEST, THE CONTRACTOR SHALL PROMPTLY FURNISH TO THE DISTRICT INFORMATION RELATING TO THIS EMPLOYEE'S EXPERIENCE.
4. WORKMANSHIP SHALL BE EQUAL OR BETTER IN QUALITY TO THAT REQUIRED BY THE CONSTRUCTION TRADES FOR A FINISHED PRODUCT. A QUALITY CONTROL SUPERVISOR, DESIGNATED BY THE MANUFACTURER, SHALL REVIEW ALL WORK IN PROGRESS AND SHALL REVIEW THE FINISHED BUILDING PRIOR TO FINAL INSPECTION TO ASSURE IT IS COMPLETE AND CORRECT. THE QUALITY CONTROL SUPERVISOR SHALL HAVE THE AUTHORITY TO HAVE MATERIALS REPLACED AND WORK REDONE IN ORDER TO CORRECT FAULTY MATERIALS OR WORKMANSHIP.

GENERAL DESIGN REQUIREMENTS

1. UP TO TEN (10) MODULES, APPROXIMATELY 12' x 40', DESIGNED SO THAT TWO (2) OR MORE MODULES MAY BE JOINED TOGETHER TO FORM A COMPLETE STRUCTURE, TO MAINTAIN A POSITIVE ALIGNMENT OF FLOORS, WALLS, AND ROOF, AND TO PERMIT SIMPLE NON-DESTRUCTIVE DETACHMENT FOR FUTURE RELOCATION.
2. EACH MODULE SHALL BE PERMANENTLY IDENTIFIED WITH (2) IMPRINTED (STAMPED, NOT ENGRAVED) METAL IDENTIFICATION TAGS 3"x1-1/2" MINIMUM SIZE WITH THE FOLLOWING INFORMATION:
   A. MANUFACTURER'S NAME AND BUILDING SERIAL NUMBER.
   B. DESIGN WIND SPEED / EXPOSURE
   C. DESIGN SEISMIC S_{DS} VALUE
   D. DESIGN ROOF LIVE LOAD & SNOW LOAD.
   E. DESIGN FLOOR LIVE LOAD
   F. D.S.A. APPLICATION NUMBER
3. 2-TAGS PER MODULE: ONE ON EXTERIOR, AND ONE ON MODULE BEAM AT FRONT OF BUILDING ABOVE CEILING.
4. EACH MODULE SHALL BE CAPABLE OF RESISTING ALL VERTICAL AND LATERAL LOADS DURING TRANSPORTATION AND RELOCATION. (NORMAL INDUSTRY PRACTICE FOR BRACING MODULES DURING TRANSPORTATION AND RELOCATIONS IS ACCEPTABLE.) WHEN MODULES ARE ASSEMBLED JOINTS SHALL BE SEALED WITH REMOVABLE CLOSING STRIPS OR OTHER METHOD TO PRESENT A FINISHED APPEARANCE AND BE PERMANENTLY WATERPROOF.
5. EACH MODULE SHALL BE SUFFICIENTLY RIGID TO BE JACKED UP AT THE FRONT AND BACK CORNERS FOR RELOCATION WITHOUT DAMAGE OR THE MODULE SHALL HAVE LIFT LUGS AT FRONT AND BACK LOCATED AS REQUIRED SO THAT THE MODULE MAY BE JACKED UP FOR RELOCATION IN ONE PIECE WITHOUT ADDITIONAL SUPPORTS OF ANY TYPE. EVIDENCE OF EXCESSIVE BOWING DURING THE INSTALLATION OF THE MODULES WHICH, IN THE OPINION OF THE RDPRC, CAUSES EXCESSIVE WORKING AT ANY JOINT OR COMPROMISES THE STRUCTURAL INTEGRITY OF THE MODULE SHALL BE SUFFICIENT REASON FOR REJECTION OF THE MODULE.
6. FINISH AND BASE MATERIALS AT EACH MODULE SHALL TERMINATE AT INTERIOR MODULE JOINTS IN A MANNER TO JOIN FLUSH AND TIGHT WITH SAME MATERIAL IN ADJACENT MODULE SO THE MODULE MAY BE RELOCATED WITH MINIMUM CUTTING AND PATCHING.

MARKERBOARD SPECIFICATIONS

MARKERBOARDS SHALL BE 24 GA. PORCELAIN STEEL FACING SHEET SUITABLE TO ACCEPT DRY ERASE FELT MARKERS. THE FACING SHEET SHALL BE LAMINATED TO PARTICLE BOARD SUBSTRATE WITH A MINIMUM DENSITY OF 45lbs./cu.ft. THE PANEL SHALL HAVE A FOIL BACKING. THE PANELS SHALL HAVE EXTRUDED ALUMINUM MOLDING AND CHALKRAIL WITH A MINIMUM OF 2 15/16" PROJECTION FROM THE FACE OF PANEL. THREE MAP HOOKS WITH CLIPS PER PANEL SHALL BE PROVIDED. ONE FLAG HOLDER, 1/2" SIZE, SHALL BE PROVIDED FOR EACH CLASSROOM. EACH CLASSROOM SHALL HAVE 2 EACH 4'x8' PANELS INSTALLED SIDE BY SIDE TO MAKE A 4'x16' PANEL, CENTERED ON THE WALL.

FOR ANCHORAGE DETAIL, SEE DETAIL 8/A4.0.

REFERENCE BRANDS: CHATFIELD-CLARKE Co, Inc. SERIES 500 OR NELSON ADAMS Co. NACO SERIES 60.

GENERAL NOTE

IT IS THE RESPONSIBILITY OF THE DESIGN PROFESSIONAL ON RECORD TO ENSURE THAT ALL SPECIFICATIONS MEET THE MINIMUM REQUIREMENTS OF THE CURRENT EDITION S OF THE CALIFORNIA STATE TITLES 19 AND 24. APPROVAL OF THESE SPECIFICATIONS DOES NOT CONSTITUTE APPROVAL FOR WAIVER OR ANY REQUIREMENTS OF THOSE REGULATIONS.

INTERIOR

1. FLOOR COVERING: PER CBC SECTION 804, COMPLY WITH NFPA 253 CLASS I OR II. COMPLY WITH ASTM E 648 FOR SPECIFIC OPTICAL DENSITY SMOKE RATING NOT TO EXCEED 450. IN EXIT PASSAGEWAYS OR CORRIDORS, THE MINIMUM CRITICAL RADIANT FLUX (CBC 804.4.2) SHALL NOT BE LESS THAN CLASS II. (CARPET SHALL BE SECURELY ATTACHED, HAVE FIRM CUSHION, PAD OR BACKING, OR NONE AT ALL. PILE YARN SHALL BE BRANDED NYLON AND HAVE A LEVEL LOOP, TEXTURED LOOP, LEVEL-CUT PILE OR LEVEL-CUT/UNCUT PILE TEXTURE. THE MAXIMUM PILE HEIGHT SHALL BE 1/2" INCH. NO CROSS SEAMS SHALL BE ALLOWED. THE CARPET DENSITY SHALL BE 4600 MINIMUM. CARPET EDGE TRIM SHALL COMPLY WITH SECTION 11B-303. COLOR TO BE SELECTED BY THE RDPRC OR OWNER.)
2. BASE: RESILIENT COVE BASE - BEST QUALITY, MOULDED RUBBER, 1/8" THICK, 4" HIGH MOULDED TOP SET COVE. PROVIDE PREFORMED BASE FOR SQUARE EXTERNAL CORNERS AND PREFORMED END STOPS WHERE BASE DOES NOT ABUT. SOLID COLOR AS MANUFACTURE BY "JOHNSONITE CO.", FLEXCO, OR EQUAL. APPLY COVE TO COMPLETE PERIMETER OF CLASSROOM.
3. INTERIOR WALLS SHALL BE VINYL COVERED TACKBOARD (U.O.N.) APPLIED IN ONE CONTINUOUS LENGTH FROM FLOOR TO CEILING. THE TACKBOARD SHALL BE INDUSTRIAL INSULATION BOARD MANUFACTURED SPECIFICALLY AS A SUBSTITUTE FOR VINYL COVERED WALL PANELS. THE BOARD SHALL BE ASPHALT FREE, SHALL HAVE AN IRONED-ON COATING AND SHALL HAVE A MINIMUM DENSITY OF 18 LBS. PER FOOT. THE VINYL COATING SHALL BE MADE OF VIRGIN VINYL CALENDERED BASE COLOR, WEIGHING A MINIMUM OF 8 OZ. PER SQUARE YARD. THE COATING BACKING SHALL BE SHEETING OR NON-WOVEN FABRIC. THE VINYL COATING SHALL BE MECHANICALLY LAMINATED, WITH THE LONG EDGES WRAPPED, TO THE TACKBOARD. TACKBOARD SHALL BE APPLIED OVER 1/2" SHEETROCK OR OSB SHEATHING. THE VINYL WALL COVERED PANEL SHALL HAVE A CLASS 'C' RATING (PER ASTM E 84 OR UL 723). FLAME SPREAD/SMOKE DEVELOPED INDEX MAXIMUMS PER NOTE #6 BELOW. THE PANEL SHALL BE APPROVED FOR CLASSROOM USE BY THE CALIFORNIA STATE FIRE MARSHAL. REFERENCE BRAND: VINYL COVERED TACKBOARD AS MANUFACTURED BY CHATFIELD-CLARKE OR COMPARABLE. CARE SHALL BE TAKEN IN MOUNTING THE TACKBOARD SO THAT THE TEXTURE OF ALL PANELS WILL HAVE THE SAME ORIENTATION AND COLOR MATCH. TACKBOARD FLAME SPREAD: 126.6 & SMOKE DEVELOPMENT: 45
4. CEILING: SUSPENDED T-BAR SYSTEM, SEE SHEET M1.4 FOR DETAILS, MATERIALS AND INSTALLATION PER ASTM C635, ASTM C636, ASTM E580, AND DSA-IR 25-2.13 AS APPLICABLE TO CLASSROOMS. PANELS SHALL BE 5/8" MINIMUM THICK, MINERAL FIBERBOARD OR VINYL-FACED FIBERGLASS LAY-IN PANELS, SQUARE EDGE, LIGHT REFLECTION 75% MINIMUM. NOISE REDUCTION COEFFICIENT OF 0.65 MINIMUM. ASTM E 84 TESTED, RATED CLASS 'C': FLAME SPREAD INDEX NOT TO EXCEED 200, SMOKE DEVELOPED INDEX RATING NOT TO EXCEED 450.
5. THE INTERIOR ENVIRONMENT SHALL BE ASSEMBLED WITH PRODUCTS THAT CONTRIBUTE TO A HEALTHY INDOOR AIR QUALITY (IAQ). THE FOLLOWING SHALL COMPLY TITLE 24, PART 11 ("CAL-GREEN"), SECTION 5.504.4. (SEE SHEET N1.0, SECTION 9C "INTERIOR AIR QUALITY CONTROL")
6. FLAME SPREAD/SMOKE-DEVELOPED INDEX (TESTED IN ACCORDANCE WITH ASTM E 84 OR UL 723, PER CBC 803.1.1):

   WALL FINISH MATERIAL (CLASS 'C')
   FLAME SPREAD MAX = 200
   SMOKE DEVELOPED MAX = 450

   PIPE INSULATION (CLASS 'A')
   FLAME SPREAD MAX = 25
   SMOKE DEVELOPED MAX = 450

   BUILDING INSULATION (CLASS 'A')
   FLAME SPREAD MAX = 25
   SMOKE DEVELOPED MAX = 450

   DUCT INSULATION (CLASS 'A')
   FLAME SPREAD MAX = 25
   SMOKE DEVELOPED MAX = 50
7. TOILET PARTITIONS: SOLID PLASTIC BY ACCURATE PARTITIONS CORP. OR EQUIVALENT w/ FLOOR ANCHORS, OVERHEAD BRACED OR EQUIVALENT. MINIMUM FLAME SPREAD RATING: 50. MINIMUM SMOKE DEVELOPMENT RATING: 450. (BY OTHERS)
8. INTERIOR VENTILATION: EAVE VENTS AND ATTIC VENTS SHALL BE PROVIDED WITH CORROSION-RESISTANT WIRE CLOTH SCREENING, HARDWARE CLOTH, PERFORATED VINYL OR SIMILAR MATERIAL WITH OPENINGS HAVING A LEAST DIMENSION OF NOT LESS THAN 1/16" AND NOT MORE THAN 1/4" INCH, PER C.B.C. SECTION 1202.2.2.

DOORS & WINDOWS

1. EXTERIOR DOORS: METAL DOORS - 3'-0"x7'-0" HOLLOW METAL DOOR CONSTRUCTION OF 1 SHEET OF 18 GA. GRADE II STEEL ASSEMBLED PER CS242 MINIMUM, AND REINFORCED WITH 20 GA. MINIMUM. FILL DOOR SPACES WITH MINERAL WOOL OR OTHER INSULATION. (REINFORCE BOTH FACES FOR CLOSURE.) PROVIDE FLUSH TOP ON DOORS. HARDWARE REINFORCEMENT SHALL BE 10 GA. MIN FOR HINGES, DOOR FRAME SHALL BE 16 GA. PRESSED STEEL FRAME ASTM A366 & C5242. HARDWARE REINFORCEMENT SHALL BE 10 GA. PLATE. FRAMES SHALL BE DESIGNED WITH INTEGRAL STOP AND TRIM. PROVIDE (3) ANCHORS PER JAMB PLUS ADJUSTABLE FLOOR ANCHOR. ROOMS WITH AN OCCUPANT LOAD OF FIVE OR MORE SHALL HAVE DOOR HARDWARE CAPABLE OF BEING LOCKED FROM THE INSIDE (PER CBC 1010.1.11).
2. EXTERIOR WINDOWS: PROVIDE ANODIZED ALUMINUM FRAME 5/8" MINIMUM DUAL PANE WINDOW UNITS, AS SHOWN ON FLOOR PLANS. THE 5/8" DIMENSION IS THE MINIMUM THICKNESS FOR THE DUAL GLAZED WINDOW PANEL CONSISTING OF TWO LITES OF GLASS AND THE AIR SPACE.
3. GLAZING MATERIAL SHALL BE: EXTERIOR LITE - 3/16" MINIMUM TEMPERED GLASS OR LAMINATED AS - 1 GLASS OF SOLAR GRAY GLARE REDUCING TYPE WITH A LIGHT TRANSMISSION FACTOR OF 45% MAXIMUM. INTERIOR LITE - 1/8" MINIMUM CLEAR TEMPERED. MINIMUM AIR SPACE SHALL BE 1/4" SPACE - BENT OR SEALED CORNER ALUMINUM WITH DESICCANT FILL SEALER - BUTYL PRIMARY SEAL AND POLYSULFIDE OR SILICONE SECONDARY SEAL. CERTIFICATION - ALL GLAZING TO BE CERTIFIED IN ACCORDANCE WITH ASTM E-773, E-774.
4. HEADER HEIGHT SHALL BE THE SAME AS THE DOOR. ALL OPERABLE SASH SHALL HAVE ALUMINUM SCREENS. WINDOWS SHALL NOT BE MOUNTED TO THE EXTERIOR OSB SURFACE. ALL WINDOWS SHALL MEET THE AAMA GS101-88 VOLUNTARY SPEC. FOR ALUMINUM PRIME WINDOWS AND SLIDING GLASS (ANS1), COMMERCIAL GRADE.
5. WINDOWS TO MATCH WHAT IS REQUIRED BY ENERGY REPORT. IF WINDOWS MUST BE NFRC RATED THAN NFRC LABELS SHALL BE LEFT ON THE WINDOWS FOR THE INSPECTOR TO VERIFY.

MECHANICAL EQUIPMENT PROTECTION

1. ALL MECHANICAL EQUIPMENT SHALL BE THOROUGLY CLEANED PROGRESSIVELY DURING CONSTRUCTION AND COMPLETION OF THE JOB. ALL OPEN ENDS OF DUCTWORK AND EQUIPMENT SHALL BE COVERED AT END OF EACH WORK DAY AND DURING SHIPMENT OF RELOCATABLE BUILDINGS

FOUNDATION CLEARANCES FROM SLOPES

CBC 1808A.7.1 BUILDING CLEARANCE FROM ASCENDING SLOPES. IN GENERAL, BUILDINGS BELOW SLOPES SHALL BE SET A SUFFICIENT DISTANCE FROM THE SLOPE TO PROVIDE PROTECTION FROM SLOPE DRAINAGE, EROSION AND SHALLOW FAILURES. EXCEPT AS PROVIDED IN SECTION CBC 1808A.7.5 AND FIGURE CBC 1808A.7.1, THE FOLLOWING CRITERIA WILL BE ASSUMED TO PROVIDE THIS PROTECTION. WHERE THE EXISTING SLOPE IS STEEPER THAN ONE UNIT VERTICAL IN ONE UNIT HORIZONTAL (100-PERCENT SLOPE), THE TOE OF THE SLOPE SHALL BE ASSUMED TO BE AT THE INTERSECTION OF A HORIZONTAL PLANE DRAWN FORM THE TOP OF THE FOUNDATION AND A PLANE DRAWN TANGENT TO THE SLOPE AT AN ANGLE OF 45 DEGREES (0.79 RAD) TO THE HORIZONTAL. WHERE A RETAINING WALL IS CONSTRUCTED AT THE TOE OF THE SLOPE, THE HEIGHT OF THE SLOPE SHALL BE MEASURED FROM THE TOP OF THE WALL TO THE TOP OF THE SLOPE.

CBC 1808A.7.2 FOUNDATION SETBACK FROM DESCENDING SLOPE SURFACE. FOUNDATIONS ON OR ADJACENT TO SLOPE SURFACES SHALL BE FOUNDED IN FIRM MATERIAL WITH AN EMBEDMENT AND SET BACK FROM THE SLOPE SURFACE SUFFICIENT TO PROVIDE VERTICAL AND LATERAL SUPPORT FOR THE FOUNDATION WITHOUT DETRIMENTAL SETTLEMENT. EXCEPT AS PROVIDED FOR IN SECTION CBC 1808A.7.5 AND FIGURE CBC 1808A.7.1, THE FOLLOWING SETBACK IS DEEMED ADEQUATE TO MEET THE CRITERIA. WHERE THE SLOPE IS STEEPER THAN 1 UNIT VERTICAL IN 1 UNIT HORIZONTAL 100-PERCENT SLOPE), THE REQUIRED SETBACK SHALL BE MEASURED FROM AN IMAGINARY PLANE 45 DEGREES (0.79 RAD) TO THE HORIZONTAL, PROJECTED UPWARD FROM THE TOE OF THE SLOPE.

FIG. 1808A.7.1

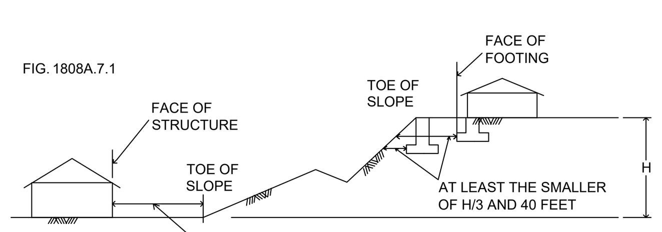

FOR SI: 1 FOOT=304.8 MM.

FIRE EXTINGUISHER

1. EACH CLASSROOM SHALL BE EQUIPPED WITH PRESSURE TYPE FIRE EXTINGUISHERS WITH 2A10BC UL RATING. MOUNT ON THE INTERIOR WALL OF THE BUILDING NEAR THE DOORWAY(S) AT A MAXIMUM HEIGHT OF 4 FEET TO THE TOP OF THE OPERATING HANDLE, AND THE BOTTOM OF F.E. MOUNTED 27" OR LESS A.F.F. FIRE EXTINGUISHERS SHALL BE TOTALLY CHARGED AND HAVE A DIAL INDICATING THE STATE OF CHARGE.

ACCESSIBILITY STANDARDS

REFERENCE: 2022 CALIFORNIA BUILDING CODE (TITLE 24, PART 2, CCR), CHAPTER 11B "ACCESSIBILITY TO PUBLIC..."

SECTION 11B-206.2 BUILDING ACCESSIBILITY, GENERAL
1. AT LEAST ONE ACCESSIBLE ROUTE SHALL CONNECT ALL BUILDINGS, ELEMENTS, AND AREAS, AND EACH FLOOR INCLUDING MEZZANINES.

SECTION 11B-216 SIGNAGE
(ALSO REFER TO SECTIONS 11B-703, 1009.9, 1009.10, 1023.9)
SIGNAGE IS REQUIRED:
1. TO IDENTIFY PERMANENT ROOMS & SPACES
2. TO PROVIDE DIRECTIONS AND INFORMATION ABOUT SPACES & FACILITIES
3. TO IDENTIFY MEANS OF EGRESS
   A. AREAS OF REFUGE AND AREA FOR ASSISTED RESCUE (PER 1009.9 AND 1009.11)
   B. DIRECTIONS TO AN EXIT (PER 1009.10)
   C. DELAYED EGRESS LOCKS (PER 1010.1.9.7 ITEM 6)
   D. EXIT WAYS (PER 1013.4)
      - AT EACH GRADE LEVEL EXTERIOR EXIT DOOR
      - AT AN EXIT BY MEANS OF A STAIRWAY OR RAMP ("EXIT STAIR DOWN" OR "EXIT RAMP DOWN")
      - AT AN EXIT ROUTE VIA ENCLOSURE, PASSAGEWAY, CORRIDOR, HALLWAY, ETC.
      - OTHER HORIZONTAL WAYS WHERE THE EXIT OR EXIT PATH IS NOT IMMEDIATELY VISIBLE (PER 1013.1)
4. TO IDENTIFY ACCESSIBLE PARKING SPACES
5. TO IDENTIFY ENTRANCES OR ROUTE TO AN ACCESSIBLE ENTRANCE
6. TO IDENTIFY ELEVATORS
7. TO IDENTIFY TOILET ROOMS
8. TO IDENTIFY PUBLIC TELEPHONES, TTY and ASSISTIVE LISTENING SYSTEMS

SIGNS, WHERE LOCATED WITHIN AN ACCESSIBLE ROUTE, MOUNTED LESS THAN 80" ABOVE THE FINISHED FLOOR, MUST HAVE ROUNDED EDGES OR AN EASED RADIUS MINIMUM OF 0.125".

SECTION 11B-404.2.8 DOOR CLOSING SPEED
1. THE SWEEP PERIOD OF ACCESSIBLE DOORS SHALL BE 5 SECONDS MINIMUM, FROM AN OPEN DOOR POSITION OF 90 DEGREES, TO A DOOR POSITION OF 12° FROM THE LATCH.

SECTION 11B-404.2.9 DOOR OPENING FORCE
1. THE EFFORT TO OPEN ANY DOOR SHALL NOT EXCEED 5LBS, EXCEPT FIRE DOORS, WHICH SHALL NOT EXCEED 15LBS FORCE. THE MINIMUM FORCE NEEDED SHALL BE USED.

SECTIONS 11B-404.2.4.3 RECESSED DOORS
1. DOORS RECESSED 8" OR MORE SHALL HAVE STRIKE EDGE CLEARANCES IN ACCORDANCE WITH FIGURE 11B-404.2.4.3.

SECTION 11B-405.5 RAMP WIDTH
1. THE CLEAR WIDTH OF A RAMP SHALL BE 48" MINIMUM.

SECTION 11B-505 HANDRAILS
1. THE TOP OF THE GRIPPING SURFACE OF HANDRAILS SHALL BE BETWEEN 34" AND 38", MEASURED VERTICALLY FROM WALKING SURFACES AND STAIR NOSINGS.
2. HANDRAILS SHALL HAVE AT LEAST 1-1/2" CLEARANCE ALONG THE SIDE; MAX. 20% OBSTRUCTIONS ON THE BOTTOM (11B-505.6).
3. HANDRAILS SHALL EXTEND BEYOND, AND IN THE SAME DIRECTION, OF STAIRS AND RAMPS.

SECTION 11B-606.4 WATER CONTROLS
1. CONTROLS TO OPERATE A WATER FAUCET OR OUTLET SHALL BE A SINGLE-LEVER DESIGN, CAPABLE OF BEING OPERATED WITH A SINGLE HAND, AND SHALL NOT REQUIRE TIGHT GRASPING, PINCHING, OR TWISTING OF THE WRIST.
2. THE FORCE REQUIRED TO OPERATE CONTROLS SHALL NOT EXCEED 5 LBS.

SECTION 11B-604 TOILET ROOMS AND BATHING ROOMS
1. AN ACCESSIBLE TOILET STALL SHALL HAVE A MINIMUM WIDTH OF 60" AND SHALL BE EQUIPPED WITH A DOOR THAT HAS AN AUTOMATIC-CLOSING DEVICE, AND SHALL HAVE A CLEAR, UNOBSTRUCTED OPENING WIDTH OF 32 INCHES WHEN LOCATED AT THE END AND 34 INCHES WHEN LOCATED AT THE SIDE, WITH THE DOOR POSITIONED AT AN ANGLE OF 90 DEGREES FROM ITS CLOSED POSITION.
2. THE INSIDE AND OUTSIDE OF THE ACCESSIBLE COMPARTMENT DOOR SHALL BE EQUIPPED WITH A LOOP OR U-SHAPED HANDLE IMMEDIATELY BELOW THE LATCH. THE LATCH SHALL BE FLIP-OVER STYLE, SLIDING OR OTHER HARDWARE NOT REQUIRING THE USER TO GRASP OR TWIST. THE LATCH AND PULL SHALL COMPLY WITH 11B-404.2.7. MAXIMUM 5 LB FORCE TO ACTIVATE (11B-309.4).
3. EXCEPT FOR DOOR-OPENING WIDTHS AND DOOR SWINGS, A CLEAR, UNOBSTRUCTED ACCESS OF NOT LESS THAN 44 INCHES SHALL BE PROVIDED TO THE WATER CLOSET COMPARTMENTS DESIGNED FOR USE BY PERSONS WITH DISABILITIES.
4. A 27"-29" MINIMUM DIMENSION IS REQUIRED FOR LAVATORY/SINK KNEE CLEARANCE, WHICH IS THE DISTANCE FROM THE FINISH FLOOR TO THE UNDERSIDE OF THE LAVATORY/SINK AND THE LAV FRONT EDGE.
5. TABLE 11B-604.9 SUGGESTS DIMENSIONS FOR CHILDREN'S USE.
6. TOILET ACCESSORIES LOCATED IN THE CIRCULATION PATH AND WITH THE BOTTOM MOUNTED ABOVE 27" SHALL BE 4" DEEP MAX (11B-307.2).

OUTDOOR VENTILATION REQUIREMENTS:

1. CLASSROOMS ARE DESIGNED FOR MINIMUM OUTSIDE AIR OF 0.38 CFM PER SF. PER THE CALIFORNIA ENERGY CODE (CEC), SPACES SHALL BE DESIGNED TO THE MINIMUM REQUIREMENTS AS SPECIFIED OR TO 15 CFM PER OCCUPANT, WHICHEVER IS GREATER. THE BUILDING MANUFACTURER SHALL VERIFY WITH THE SCHOOL DISTRICT THE EXPECTED NUMBER OF OCCUPANTS IN THE CLASSROOM SO THAT THE OUTDOOR VENTILATION RATE FOR MECHANICAL SYSTEMS CAN BE ADEQUATELY ADJUSTED UPON SITE INSTALLATION OF THE BUILDING. THE BUILDING MANUFACTURER SHALL ALSO CONFIRM WITH HVAC EQUIPMENT MANUFACTURER THAT THE SELECTED EQUIPMENT WILL BE ABLE TO PERFORM TO ACCOMMODATE THE ADDITIONAL OUTDOOR AIR REQUIREMENTS UNDER PEAK DESIGN CONDITIONS FOR THE CLIMATE ZONE IN WHICH THE BUILDING IS LOCATED. AT OCCUPANCY, THE BUILDING MANUFACTURER SHALL PROVIDE TO BUILDING OWNER A DESCRIPTION OF THE QUANTITIES OF OUTDOOR AND RECIRCULATED AIR THAT THE VENTILATION SYSTEMS ARE DESIGNED TO PROVIDE TO EACH AREA.

LIGHT GAUGE METAL STUDS & COLD FORMED STEEL

1. ALL LIGHT GAUGE METAL STUDS & COLD FORMED STEEL SHALL BE FORMED FROM STEEL THAT CORRESPONDS TO THE MINIMUM REQUIREMENTS OF THE AISI S100-16.
2. ALL GALVANIZED STUDS, JOISTS, TRACK, BRIDGING AND ACCESSORIES SHALL BE FORMED FROM STEEL HAVING A GALVANIZED COATING MEETING THE REQUIREMENTS OF ASTM A653.
3. CUSTOM FORMED SHAPES SHALL BE BENT FROM ASTM A1011 SS STEEL SHEETS.
4. STUD AND TRACK DESIGNATIONS ARE BASED ON STEEL STUD MANUFACTURERS ASSOCIATION. ICC-ES EVALUATION REPORT ESR-3064P.
5. GALVANIZED FRAMING PRODUCTS SHALL BE COATED IN ACCORDANCE WITH AISI S240-20, SECTION 20 A4. PRODUCTS WILL BE FURNISHED WITH A G-60 OR EQUIVALENT COATING IF SPECIFIED, AND SHALL BE IN CONFORMANCE WITH ASTM C-955, OTHERWISE, G-90 OR EQUIVALENT COATING WILL BE PROVIDED.
6. WELDING OF LIGHT GAUGE METAL STUDS & COLD FORMED STEEL SHALL COMPLY WITH AWS D1.3-08.
7. ALL COLD-ROLLED MEMBERS FABRICATED BY AMS SHALL USE HOT-ROLLED SHEETS WITH THE FOLLOWING MIN. SPECIFICATIONS UNLESS NOTED OTHERWISE ON THE DRAWINGS.

GA	MATERIAL	DESIGN THICKNESS	MIN. THICKNESS
20	A1011 SS Gr. 36	0.0346"	0.0329"
18	A1011 SS Gr. 36	0.0451"	0.0428"
16	A1011 SS Gr. 50	0.0566"	0.0538"
14	A1011 SS Gr. 45	0.0713"	0.0677"
12	A1011 SS Gr. 45	0.1017"	0.0966"
10	A1011 SS Gr. 50	0.1345"	0.1278"

METAL FLOOR DECK

1. SECTION PROPERTIES SHALL BE DERIVED IN ACCORDANCE WITH AISI, "SPECIFICATION FOR DESIGN OF COLD-FORMED STEEL STRUCTURAL MEMBERS, LATEST EDITION."
2. METAL DECKING IS TO BE ATTACHED TO THE STRUCTURAL FRAME IN CONFORMANCE WITH AWS D1.1 AND D1.3, "SPECIFICATION FOR WELDING SHEET STEEL IN STRUCTURES."

METAL FLOOR DECK (CONTINUED)

3. ASTM REFERENCE NUMBERS: ASTM A653, STEEL SHEET, ZINC-COATED (GALVANIZED) OR ZINC-IRON ALLOY-COATED (GALVANEALED) BY THE HOT-DIP PROCESS STRUCTURAL (PHYSICAL) QUALITY.
4. STEEL DECK INSTITUTE (SDI)-METAL FLOOR DECK PROFILES SHALL BE IN CONFORMANCE WITH SDI STANDARDS.
5. METAL FLOOR DECK TO BE ASC STEEL DECK PER IAPMO ER-0329:
   1.1. BH-36, 18 GAUGE, 1½" DEEP x 36" WIDE
   1.2. 3WxH-36, 18 GAUGE, 3" DEEP x 36" WIDE
6. DECK UNITS ARE TO BE FABRICATED FROM SHEET STEEL CONFORMING TO:
   1.1. ASTM A653 SS, F_Y=50 KSI WITH A GALVANIZED COATING, G-60 OR G-90.

FASTENERS FOR ATTACHMENT TO STEEL

1. SCREWS FOR STEEL TO STEEL & WOOD TO STEEL CONNECTIONS SHALL BE SELF-DRILLING, SELF-TAPPING SCREWS (SDSTS) PER ASTM C1513, UNO.
   1.1 HEAD TYPE AS REQUIRED FOR APPLICATION.
   1.2 SCREW LENGTHS TO HAVE 3 EXPOSED THREADS MIN.
   1.3 CORROSION PROTECTION: INTERIOR USE SCREWS AND SCREWS THAT ARE PROTECTED FROM THE OUTSIDE ENVIRONMENT SHALL BE ELECTRO-ZINC PLATED MIN, UNO. EXTERIOR USE SCREWS THAT ARE EXPOSED TO THE OUTSIDE ENVIRONMENT SHALL BE ONE OF THE FOLLOWING, UNO:
      A. ITW BUILDEX TEKS SELF-DRILLING TAPPING SCREWS WITH CLIMASEAL COATING PER ICC ESR-1976.
      B. HILTI SELF-DRILLING AND SELF-PIERCING TAPPING SCREWS WITH KWIK-COTE COATING PER ICC ESR-2196.
      C. GRABBER SELF-DRILLING TAPPING SCREWS WITH GRABBERGARD COATING PER ICC ESR-1271.
2. SHOT PINS SPECIFIED FOR PLYWOOD DIAPHRAM TO LIGHT GAUGE STEEL CONNECTIONS SHALL BE ET&F PINS PER IAPMO UES REPORT ER-0335.
3. SHOT PINS FOR ATTACHMENT OF 2X WOOD OR LIGHT GAUGE STEEL MEMBERS TO STRUCTURAL STEEL OR CONCRETE SHALL BE BY HILTI UNO.

ABBREVIATION LEGEND

ACC	ACCESSIBLE
AC	ASPHALT CONCRETE
A/C	AIR CONDITIONING
ACI	AMERICAN CONCRETE INSTITUTE
ACOUS	ACOUSTICAL
ADD	ADDENDUM
ADD'L	ADDITIONAL
ADJ	ADJUSTABLE OR ADJACENT
AISC	AMERICAN INSTITUTE OF STEEL CONSTRUCTION
AISI	AMERICAN IRON AND STEEL INSTITUTE
ALT	ALTERNATE
ALUM	ALUMINUM
ANSI	AMERICAN NATIONAL STANDARDS INSTITUTE
APA	AMERICAN PLYWOOD ASSOCIATION
ARCH	ARCHITECT(URAL)
ASTM	AMERICAN SOCIETY FOR TESTING AND MATERIALS
AWC	AMERICAN WOOD COUNCIL
AWPA	AMERICAN WOOD PROTECTION ASSOCIATION
AWS	AMERICAN WELDING SOCIETY
BD	BOARD
BLDG	BUILDING
BLK	BLOCK
BLKG	BLOCKING
BLW	BELOW
BM	BEAM
BN	BOUNDARY NAILING
BOT/BOTT	BOTTOM
BRG	BEARING
BTWN	BETWEEN
BUR	BUILT UP ROOFING
C	CARPET
CAB	CABINET
CB	CATCH BASIN
CBC	CALIFORNIA BUILDING CODE
CCR	CALIFORNIA CODE OF REGULATIONS
CEM	CEMENT
CF	CUBIC FOOT
CJ	CONTROL JOINT
CJP	COMPLETE JOINT PENETRATION
CLG	CEILING
CLR	CLEAR
CT	CERAMIC TILE
CMU	CONCRETE MASONRY UNIT
CNEL	COMMUNITY NOISE EQUIVALENT LEVEL
CO	CLEAN OUT
COL	COLUMN
CONC	CONCRETE
CONN	CONNECTION
CONT	CONTINUOUS
CSK	COUNTERSINK
CTRD	CENTERED
CW	COLD WATER
DBL	DOUBLE
DET	DETAIL
DF	DRINKING FOUNTAIN OR DOUGLAS FIR
DIA	DIAMETER
DIAG	DIAGONAL
DIM	DIMENSION
DIV	DIVISION
DR	DOOR
DS	DOWNSPOUT
DSA	DIVISION OF THE STATE ARCHITECT
DWG	DRAWING
(E)	EXISTING
EA	EACH
EJ	EXPANSION JOINT
ELEV	ELEVATION
ELECT	ELECTRICAL
EMBED	EMBEDMENT
EMT	ELECTRICAL MAGNETIC TUBING
EN	EDGE NAILING (OR EDGE FASTENING)
ETC	ET CETERA
EQ	EQUAL
EW	EACH WAY
EXP	EXPOSURE
EXT	EXTERIOR
F	FAHRENHEIT
FUT	FUTURE
FAB	FABRICATION
FAC	FACTORY
FD	FLOOR DRAIN
FF	FINISHED FLOOR
FG	FINISHED GRADE
FHWS	FLAT HEAD WOOD SCREW
FIN	FINISH
FLR	FLOOR
FLSHG	FLASHING
FN	FIELD NAILING
FND/FNDN	FOUNDATION
FO	FACE OF
FOC	FACE OF CONCRETE
FOCOL	FACE OF COLUMN
FOF	FACE OF FINISH
FOP	FACE OF PLYWOOD
FOS	FACE OF STUD
FRP	FIBERGLASS REINFORCED PLASTIC PANELS
FT	FOOT
FTG	FOOTING
FURR	FURRED (-ING)
GA	GAUGE
GB	GYPSUM BOARD
GL	GLASS OR GLAZING
GLV/GALV	GALVANIZED
GSM	GALVANIZED SHEET METAL
GYP	GYPSUM
GYP.BD.	GYPSUM BOARD
HB	HOSE BIBB
HC	HOLLOW CORE
HDR	HEADER
HDW	HARDWOOD
HF	HEM FIR
HM	HOLLOW METAL (STEEL)
HOR/HORIZ	HORIZONTAL
HSS	HOLLOW STRUCTURAL SECTION (STEEL)
HT	HEIGHT
HVAC	HEATING VENTILATING AIR CONDITIONING
HW	HOT WATER
IAPMO	INTERNATIONAL ASSOCIATION OF PLUMBING AND MECHANICAL OFFICIALS
ICC	INTERNATIONAL CODE COUNCIL
ID	INSIDE DIAMETER
IN	INCH
INSUL	INSULATE (D), (ION)
INT	INTERIOR
INV	INVERT
IR	INTERPRETATION OF REGULATIONS
ISA	INTERNATIONAL SYMBOL OF ACCESSIBILITY/ACCESS
JT	JOINT
KSI	KIPS PER SQUARE INCH (KIPS = 1,000LBS)
LAM	LAMINATE(D)
LAV	LAVATORY
LB, LBS	POUND
LLH	LONG LEG HORIZONTAL
LLV	LONG LEG VERTICAL
LNDG	LANDING
LONG	LONGITUDINAL
LS	LAG SCREW
LT	LIGHT
LW	LIGHT WEIGHT
LWC	LIGHT WEIGHT CONCRETE
MATL	MATERIAL
MAX	MAXIMUM
MB	MECHANICAL BOLT
MECH	MECHANICAL
MFG	MANUFACTURING
MFR	MANUFACTURER
MIN	MINIMUM
MIR	MIRROR
MISC	MISCELLANEOUS
MM	MILLIMETER
MTL	METAL
(N)	NEW
NIC	NOT IN CONTRACT
NDS	NATIONAL DESIGN SPECIFICATION
NW	NORMAL WEIGHT
NWC	NORMAL WEIGHT CONCRETE
O/	OVER
OC	ON CENTER
OD	OUTSIDE DIAMETER
OH	OPPOSITE HAND OR OVERHANG
OL	OCCUPANT LOAD
OPG	OPENING
OPP	OPPOSITE
OSB	ORIENTED STRAND BOARD
PAF	POWER-ACTUATED FASTENER
PL	PROPERTY LINE
PLAM	PLASTIC LAMINATE
PLAS	PLASTER
PLF	POUNDS PER LINEAR FOOT
PLT	PLATE
PLWD/PLY	PLYWOOD
PNL	PANEL
POC	POINT OF CONNECTION
PS	PRODUCT STANDARD
PSF	POUNDS PER SQUARE FOOT
PSI	POUNDS PER SQUARE INCH
PSL	PARALLEL STRAND LUMBER
PT	PRESSURE TREATED
PTDF	PRESERVATIVE TREATED DOUGLAS FIR
PTN	PARTITION
PVC	POLYVINYL CHLORIDE
R	RISER
RD	ROOF DRAIN
RDPRC	REGISTERED DESIGN PROFESSIONAL IN RESPONSIBLE CHARGE
RDWD	REDWOOD
REF	REFERENCE
REFR	REFRIGERATOR
REINF	REINFORCING
REQ'D/REQ	REQUIRED
RES	RESILIENT
RDWD	REDWOOD
RWL	RAIN WATER LEADER
SCH/SCHED	SCHEDULE
SD	STORM DRAIN
SDSTS	SELF-DRILLING, SELF-TAPPING SCREW
SEC	SECTION
SEP	SEPARATION
SF	SQUARE FEET
SHT	SHEET
SHTG	SHEATHING
SIM	SIMILAR
SMS	SHEET METAL SCREW
SOG	SLAB-ON-GRADE
SP	STRUCTURAL PLYWOOD
SPEC	SPECIFICATIONS
SQ	SQUARE
SS	STAINLESS STEEL
SSMA	STEEL STUD MANUFACTURERS ASSOCIATION
STAGG	STAGGERED
STN	STAIN
STD	STANDARD
STL	STEEL
STS	SELF TAPPING SCREW
STSMS	SELF TAPPING SHEET METAL SCREW
T&B	TOP AND BOTTOM
T&G	TONGUE AND GROOVE
TEMP	TEMPERED
THRU	THROUGH
TJ	TOOL JOINT
TOC	TOP OF CURB, CRICKET, OR CONCRETE
TOP	TOP OF PARAPET
TOS	TOP OF SLAB, SHEATHING, OR STEEL
TOW	TOP OF WALL
TRANS	TRANSVERSE
TS	TOP OF SHEATHING
TV	TELEVISION
TYP	TYPICAL
UON	UNLESS OTHERWISE NOTED
UNO	UNLESS NOTED OTHERWISE
VAR	VARIES
VCT	VINYL COMPOSITION TILE
VCTB	VINYL COVERED TACKBOARD
VERT	VERTICAL
VOC	VOLATILE ORGANIC COMPOUND(S)
VFY	VERIFY
VIF	VERIFY IN FIELD
VWC	VINYL WALL COVERING
W/	WITH
WD	WOOD
WF	WIDE FLANGE
WIN	WINDOW
W/O	WITHOUT
WS	WOODSCREW
WSCT	WAINSCOT
WT	WEIGHT
WWF	WELDED WIRE FABRIC
∠	ANGLE
@	AT
℄	CENTER LINE
Ø	DIAMETER
°	DEGREES
M̸L	MODULE LINE
±	PLUS/MINUS

IDENTIFICATION STAMP
DIV. OF THE STATE ARCHITECT
APP: 03-124589 INC:
REVIEWED FOR
SS ☑ FLS ☑ ACS ☑
DATE: 04/15/2025

AMS®
American Modular Systems
787 Spreckels Ave., Manteca, CA 95336
Phone (209) 825-1921 Fax (209) 825-7018
www.americanmodular.com

INTELLECTUAL-PROPERTY & PROPRIETARY RIGHTS STATEMENT
COPYRIGHT © AMERICAN MODULAR SYSTEMS (AMS)
AMS OWNS ALL COPYRIGHT AND OTHER INTELLECTUAL-PROPERTY AND PROPRIETARY RIGHTS IN THESE DRAWINGS, SPECIFICATIONS, AND THE MATERIAL CONTAINED HEREIN. CERTAIN ELEMENTS SHOWN IN THESE DOCUMENTS ARE REGISTERED TRADEMARKS OF AMS. ALL PATENTABLE MATERIALS CONTAINED IN THESE DOCUMENTS AND ORIGINATING WITH AMS WILL REMAIN THE SOLE PROPERTY OF AMS. THESE DRAWING, SPECIFICATIONS, AND THE MATERIAL CONTAINED HEREIN MAY NOT BE REPRODUCED, TRANSMITTED, COPIED, DISTRIBUTED, MODIFIED, OR OTHERWISE DISPOSED OF (DIRECTLY OR INDIRECTLY) AND MAY NOT BE USED (IN WHOLE OR IN PART) TO ASSIST IN THE CONSTRUCTION, DESIGN, OR OTHER MAKING OF, OR FOR THE PURPOSE OF FURNISHING ANY INFORMATION FOR THE CONSTRUCTION, DESIGN, OR OTHER MAKING OF, ANY BUILDINGS (MODULAR OR OTHERWISE), DRAWINGS, SPECIFICATIONS, PRINTS, APPARATUS, OR PARTS THEREOF, EXCEPT AS EXPRESSLY PERMITTED BY WRITTEN CONSENT OF, OR IN A WRITTEN AGREEMENT WITH, AMS. SUBMITTAL OR DISTRIBUTION TO MEET OFFICIAL REGULATORY REQUIREMENTS WILL NOT BE CONSTRUED AS PUBLICATION IN DEROGATION OF AMS'S COPYRIGHT OR OTHER INTELLECTUAL-PROPERTY OR PROPRIETARY RIGHTS.

PRE-CHECKED SET NAME
24' x 40' THRU 120' x 40'
STANDARD MODULAR BUILDING
(HIGH SEISMIC)
FORM®

SITE SPECIFIC PROJECT NAME
VENTURA COLLEGE
(1) 72'x40' BUILDING

APPROVED
DIV. OF THE STATE ARCHITECT
APP: 04-122051 PC
REVIEWED FOR
SS ☑ FLS ☑ ACS ☑ CG ☑
DATE: 04/03/2024

☒ 2022 CBC PRE-CHECK (PC) DOCUMENT
A SEPARATE PROJECT APPLICATION FOR CONSTRUCTION IS REQUIRED.

MANUFACTURER PROFESSIONAL OF RECORD ON PC

LICENSED ARCHITECT
RANDALL PATRICK CAVANAGH
No. C12631
Ren. 3-31-25
STATE OF CALIFORNIA

THESE DRAWINGS ARE PRELIMINARY AND NOT FOR CONSTRUCTION UNLESS STAMPED & SIGNED BY THE DESIGN PROFESSIONAL OF RECORD.

REVISIONS

1	
2	
3	
4	

DRAWN BY:	AA
SCALE:	AS NOTED
DATE:	MM/DD/YY
PROJECT NO:	XXXX-22

SHEET TITLE:
GENERAL NOTES
&
SPECIFICATIONS

SHEET NUMBER:
N2.0

DOORS							FRAMES			
DOOR NO.	DOOR TYPE	DOOR SIZE	QUANTITY	MATERIAL	FINISH	HARDWARE SET NO.	FRAME TYPE	MATERIAL	FINISH	REMARKS
1	D1	3'-0" x 7'-0"	-	HM	PT	A/B	F1	S	PT	HARDWARE LOCKABLE FROM THE INSIDE, SEE DOOR NOTE #3
2	D2	3'-0" x 7'-0"	-	HM	PT	H/I	F1	S	PT	
3	D3	2'-0" x 7'-0"	-	HM	PT	J	F2	S	PT	
4	D4	3'-0" x 7'-0"	-	SC	CLR	D	F1	S	PT	

DOOR ABBREVIATIONS

HM - HOLLOW METAL
AL - ALUMINUM
S - STEEL
SST - STAINLESS STEEL
STL - STEEL FRAME, 16ga. FULLY WELDED
WWF - WINDOW WALL FRAME
SC - SOLID CORE WOOD
HC - HOLLOW CORE WOOD
PT - PAINTED
CA - CLEAR ANODIZED
BR - BRONZE ANODIZED
CLR - CLEAR FINISH

DOOR NOTES

1. DOORS SHALL COMPLY WITH C.B.C. SECTION 1010.
2. CLASSROOMS ≥ 1000 S.F WILL REQUIRE PANIC HARDWARE THAT COMPLIES WITH C.B.C. SECTION 1010.2.9.
3. PER C.B.C. 1010.2.8.2: PROVIDE LOCKS THAT ALLOW DOORS TO CLASSROOMS AND ANY ROOM WITH AN OCCUPANCY OF FIVE OR MORE PERSONS TO BE LOCKED FROM THE INSIDE. LOCKS SHALL COMPLY WITH C.B.C. SECTION 1010.2.4.

DOOR SCHEDULE

WINDOW TYPE	QTY.	FUNCTION	'W' WIDTH	'H' HEIGHT	FINISH	GLASS TYPE	U FACTOR	SHGC	VT MIN	MIN STC RATING	REMARKS
A	-	FIXED	10'-0" MAX.	8'-0" MAX.	BRONZE ANODIZED	SOLAR GREY [6]	0.42	0.25	0.44	27	INOPERABLE
B	-	FIXED	6'-0" MAX.	6'-0" MAX.	BRONZE ANODIZED	SOLAR GREY [6]	0.42	0.25	0.44	27	INOPERABLE

1. EXTERIOR LITE - 3/16" MINIMUM TEMPERED GLASS, OR LAMINATED AS 1 GLASS OF SOLAR GRAY GLARE REDUCING TYPE WITH A LIGHT TRANSMISSION FACTOR OF 45% MAXIMUM. GLASS SHALL BE DUAL-PANE.
2. WINDOWS THAT MEETS ALL OF THE FOLLOWING CONDITIONS SPECIFIED IN SECTION 2406.4.3, SHALL BE CONSIDERED A HAZARDOUS LOCATION:
   A. THE EXPOSED AREA OF AN INDIVIDUAL PANE IS GREATER THAN 9 SQUARE FEET.
   B. THE BOTTOM EDGE OF THE GLAZING IS LESS THAN 18" ABOVE FINISH FLOOR.
   C. THE TOP EDGE OF THE GLAZING IS GREATER THAN 36" ABOVE FINISH FLOOR.
   D. ONE OR MORE WALKING SURFACE(S) ARE WITHIN 36", MEASURED HORIZONTALLY AND IN A STRAIGHT LINE, OF THE PLANE OF THE GLAZING.
3. WINDOWS THAT ARE CONSIDERED A HAZARDOUS LOCATION SHALL CONTAIN FULLY TEMPERED SAFETY GLAZING & MEET THE FOLLOWING REQUIREMENTS:
   A. PASS THE IMPACT TEST REQUIREMENTS IN ACCORDANCE WITH "CPSC 16 CFR PART 1201" PER SECTION 2406.2, WITH A TEST CRITERIA OF CATEGORY II, UNLESS OTHERWISE INDICATED IN C.B.C. TABLE 2406.2(1).
   B. IDENTIFICATION OF SAFETY GLAZING PER C.B.C. 2406.3
4. ALL WINDOWS SHALL HAVE METAL FRAMES AND BE MANUFACTURED BY OTHERS.
5. NOT USED
6. THE MINIMUM STANDARD GLASS TYPE FOR ALL WINDOWS SHALL SOLAR GREY GLAZING. UPGRADED GLAZING (LOW E, LOW E2, ETC.) MAY BE USED PER SITE SPECIFIC REQUIREMENTS. WINDOWS TO BE DUAL-PANE PER CA ENERGY CODE.
7. ALL NFRC RATED FENESTRATION AS NOTED ON THE WINDOW SCHEDULE REQUIRE TEMPORARY NFRC LABELS. TEMPORARY NFRC LABELS SHALL STAY ON FENESTRATION PRODUCTS UNTIL INSPECTOR HAS VERIFIED THAT THE INSTALLED U-FACTOR, SHGC, AND VT MATCH THE WINDOW SCHEDULE.

WINDOW SCHEDULE

FINISHES										
ROOM NUMBER	ROOM NAME	FLOOR	BASE	WALLS FRONT	WALLS REAR	WALLS RIGHT	WALLS LEFT	CEILING	CEILING HEIGHT	REMARKS
101 TYP	CLASSROOM - STANDARD	A	D	F	F	F	F	K	8'-6"	
102 TYP	CLASSROOM - STANDARD	A	D	F	F	F	F	K	8'-6"	
--- TYP	BOYS R.R.	B	E	J	J	J	J	H	8'-6"	
--- TYP	GIRLS R.R.	B	E	J	J	J	J	H	8'-6"	
--- TYP	STAFF ROOM	B	E	J	J	J	J	H	8'-6"	
--- TYP	SINGLE TOILET R.R.	B	E	J	J	J	J	H	8'-0"	

FINISH INDICATOR OPTIONS

A - CARPET; PER STATE OF CALIF SPEC COMPLYING WITH GROUP 1, TYPE A OR TYPE B, CLASS 2, DENSITY 4600.
B - VINYL SHEET FLOORING; 0.6 MIN, C.D.F. PER ASTM D 2047
C - VCT; ARMSTRONG, STANDARD, OR EXCELON.
D - TOP SET BASE; 4"
E - TOP SET BASE; 6"
F - WALL FINISH; 1/2" VINYL TACKBOARD CLASS 1 OVER 1/2" GYP BOARD BACKING
G - 1/2" W.R. GYP BOARD; TAPE, PAINTED FINISH
H - 1/2" GYP BOARD; TAPE, PAINTED FINISH
J - 3/32" F.R.P.; OVER 1/2" W.R. GYP BOARD
K - ACOUSTICAL LAY-IN GRID CEILING PANELS; 2'x2' OR 2'x4'
L - 1/2" VINYL TACKBOARD; CLASS 1, OVER 5/8" TYPE "X" GYP BOARD BACKING
M - 5/8" TYPE 'X' GYP BOARD; TAPE, TEXTURE, PAINTED FINISH
N - CERAMIC TILE - (FULL HEIGHT AT WALLS)
O - EXPOSED CONCRETE WITH CONCRETE SEALER
P - CLOUD CEILING PANELS

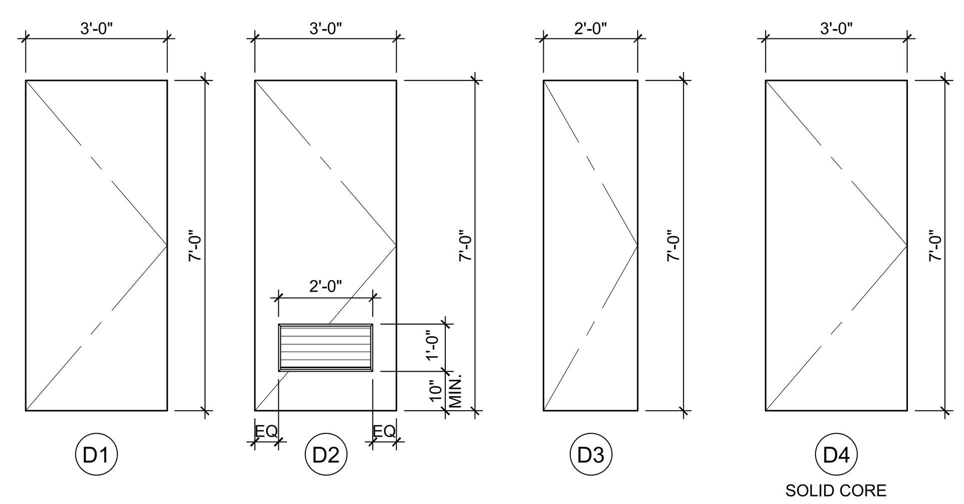

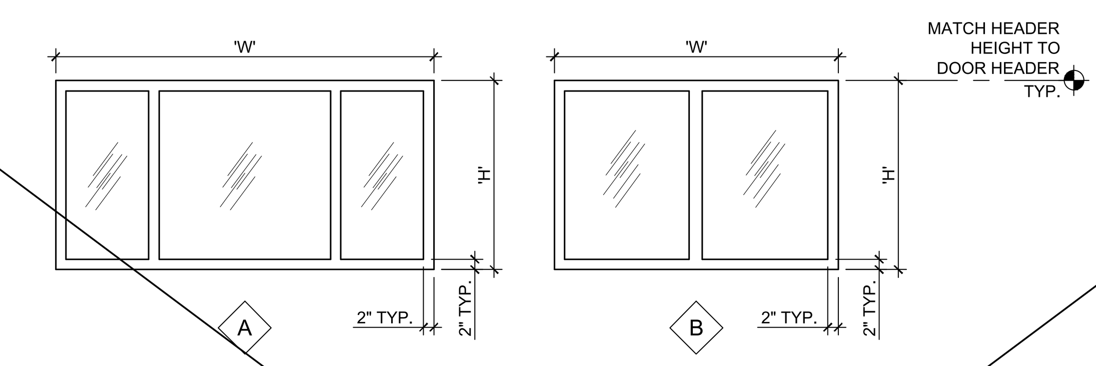

NOTES:

SEE SHEET N3.0-M FOR SITE SPECIFIC SHEET

...OMPLY WITH CFC, CBC & TITLE 19.

DOOR TYPES

ROOM FINISHES SCHEDULE

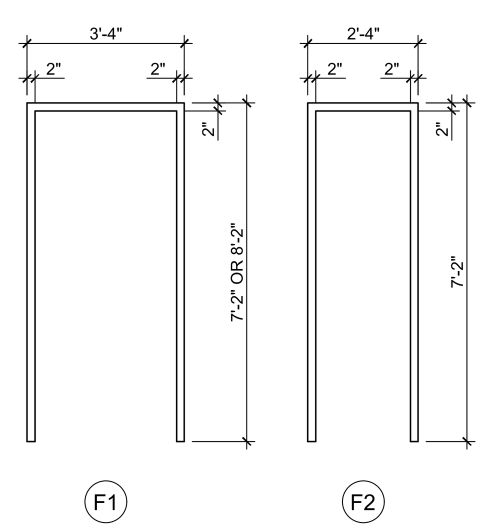

24'x40'	80	80	160
36'x40'	160	80	240
48'x40'	160	160	320
60'x40'	240	160	400
72'x40'	240	240	480
84'x40'	320	240	560
96'x40'	320	320	640
108'x40'	400	320	720
120'x40'	400	400	800

** MAX SQUARE FOOTAGES ALLOWED CAN BE ALTERNATED FROM FRONT TO REAR OR REAR TO FRONT BUT NOT COMBINED.

* WINDOW PLACEMENT & SIZE MAY VARY AS TITLE 24 MODEL REFLECTS THE LARGEST WINDOW OPTION.
THE TOTAL WINDOW AREA OF ANY BUILDING MAY NOT EXCEED THE MAXIMUM ALLOWED WINDOW AREA (SQ. FT.) LISTED IN THE TABLE ABOVE.
IF A BUILDING EXCEEDS THE MAXIMUM AREA, A PROJECT SPECIFIC TITLE 24 REPORT SHALL BE PROVIDED

DOOR FRAME TYPES

WINDOW GLAZING AREA TABLE

A	EXTERIOR DOOR LOCKSET w/LEVER RHODES SCHLAGE ND95PD - CLASSROOM LOCK
B	EXTERIOR DOOR PANIC BAR w/PULL ON EXTERIOR VON DUPRIN AX22PANL-CD (REQUIRED WHEN OCCUPANT LOAD IS 50 0R MORE)
C	INTERIOR PASSAGE COPPER CREEK 6220-PASSAGE w/ LEVER
D	INTERIOR RESTROOM COPPER CREEK 6231-RESTROOM w/ LEVER
E	INTERIOR ENTRY/OFFICE COPPER CREEK 6241-ENTRY/OFFICE w/ LEVER
F	INTERIOR STOREROOM COPPER CREEK 6250-STOREROOM w/ LEVER
G	INTERIOR CLASSROOM COPPER CREEK 6260-CLASSROOM w/ LEVER
H	EXTERIOR DOOR LOCKSET w/LEVER RHODES SCHLAGE ND70PD - MULTI-ACCOMODATION RESTROOM LOCK
I	EXTERIOR DOOR LOCKSET w/LEVER & PUSH BUTTON RHODES SCHLAGE ND85PD - SINGLE USER RESTROOM LOCK
J	EXTERIOR DOOR LOCKSET w/LEVER RHODES SCHLAGE ND80PD - STOREROOM LOCK

EXTERIOR DOOR HARDWARE

1. HINGES: HAGER 4-1/2x4-1/2 BUTTS, BB1279 US26D, 1-1/2 PAIR PER DOOR, WITH SET SCREW IN BARREL AND BALL BEARING DESIGN.
2. CLOSER: NORTON 8500DA OR 8500BF SERIES, LCN 1460 DEL SERIES OR EQUAL. (5 LBS. MAX. PRESSURE) ALL SCHLAGE HARDWARE IS PROVIDED WITH A CLOSER
3. WEATHERSTRIPPING: ALL EXTERIOR DOORS SHALL BE WEATHERSTRIPPED WITH PEMKO 299D, ULTRA WS007 OR EQUAL, AT DOOR JAMBS AND HEAD.
4. THRESHOLD: THRESHOLD SHALL BE PEMKO 271 AV 5" ALUMINUM WITH PEMKO 216 AV ULTRA TH042 DOOR BOTTOM.
5. LOCKDOWN: INTERIOR TEACHERS' MANUAL LOCK FOR CAMPUS LOCK DOWN CRITERIA - REQUIRED FOR STATE-FUNDED SCHOOLS, PER EDUCATION CODE SECTION 17075.50 (AND ALSO CBC 1010.2.8.2): PROVIDE LOCKS THAT ALLOW DOORS TO CLASSROOMS AND ANY ROOM WITH AN OCCUPANCY OF FIVE OR MORE PERSONS TO BE LOCKED FROM THE INSIDE. LOCKS SHALL COMPLY WITH C.B.C. SECTION 1010.2.4.

DOOR HARDWARE NOTES

1. 11B-404.2.3 CLEAR WIDTH
   DOOR OPENINGS SHALL PROVIDE A CLEAR WIDTH OF 32 INCHES (813 MM) MINIMUM. CLEAR OPENINGS OF DOORWAYS WITH SWINGING DOORS SHALL BE MEASURED BETWEEN THE FACE OF THE DOOR AND THE STOP, WITH THE DOOR OPEN 90 DEGREES. OPENINGS MORE THAN 24 INCHES (610 MM) DEEP SHALL PROVIDE A CLEAR OPENING OF 36 INCHES (914 MM) MINIMUM. THERE SHALL BE NO PROJECTIONS INTO THE REQUIRED CLEAR OPENING WIDTH LOWER THAN 34 INCHES (864 MM) ABOVE THE FINISH FLOOR OR GROUND. PROJECTIONS INTO THE CLEAR OPENING WIDTH BETWEEN 34 INCHES (864 MM) AND 80 INCHES (2032 MM) ABOVE THE FINISH FLOOR OR GROUND SHALL NOT EXCEED 4 INCHES (102 MM).

   EXCEPTIONS:
   1. IN ALTERATIONS, A PROJECTION OF 5/8 INCH (15.9 MM) MAXIMUM INTO THE REQUIRED CLEAR WIDTH SHALL BE PERMITTED FOR THE LATCH SIDE STOP.
   2. DOOR CLOSERS AND DOOR STOPS SHALL BE PERMITTED TO BE 78 INCHES (1981 MM) MINIMUM ABOVE THE FINISH FLOOR OR GROUND.
2. HANDLES, PULLS, LATCHES, LOCKS AND OTHERS OPERABLE PARTS ON DOORS SHALL BE OPERABLE WITH ONE HAND AND SHALL NOT REQUIRE TIGHT GRASPING, PINCHING OR TWISTING OF THE WRIST. THE FORCE REQUIRED TO ACTIVATE OPERABLE PARTS SHALL BE 5 lbs. MAX. (11B-404.2.7, 11B-309.4)
3. DOORS SHALL BE OPERABLE FROM INSIDE WITH A SINGLE MOTION W/O THE USE OF ANY TOOLS, EFFORT, OR SPECIAL KNOWLEDGE.
4. EMERGENCY EXIT AND PANIC HARDWARE
   EMERGENCY EXIT AND PANIC HARDWARE SHALL COMPLY WITH SFM STANDARD 12-10-3, SECTION 12-10-302
   A) THE CROSS-BAR SHALL EXTEND ACROSS NOT LESS THAN ONE-HALF THE WIDTH OF THE DOOR/GATE
   D) THE ENDS OF THE CROSS-BAR SHALL BE CURVED, GUARDED OR OTHERWISE DESIGNED TO PREVENT CATCHING ON THE CLOTHING OF PERSONS DURING EGRESS.

*ADDITIONAL DOORS MAY BE REQUIRED BASED ON BUILDING LAYOUT.

DOOR HARDWARE SCHEDULE

EMERGENCY EXIT AND PANIC HARDWARE:
IN COMPLIANCE WITH SFM STANDARD 12-10-3, SECTION 12-1-302

(A) THE CROSS BAR SHALL EXTEND ACROSS NOT LESS THAN ONE HALF THE WIDTH OF THE DOOR/GATE.

(B) THE ENDS OF THE CROSS BAR SHALL BE CURVED, GUARDED OR OTHERWISE DESIGNED TO PREVENT CATCHING ON THE CLOTHING OF PERSONS DURING EGRESS.

EMERGENCY EXIT AND PANIC HARDWARE

IDENTIFICATION STAMP
DIV. OF THE STATE ARCHITECT
APP: 03-124589 INC:
REVIEWED FOR
SS ☑ FLS ☑ ACS ☑
DATE: 04/15/2025

AMS®
American Modular Systems
787 Spreckels Ave., Manteca, CA 95336
Phone (209) 825-1921 Fax (209) 825-7018
www.americanmodular.com

INTELLECTUAL-PROPERTY & PROPRIETARY RIGHTS STATEMENT
COPYRIGHT © AMERICAN MODULAR SYSTEMS (AMS)
AMS OWNS ALL COPYRIGHT AND OTHER INTELLECTUAL-PROPERTY AND PROPRIETARY RIGHTS IN THESE DRAWINGS, SPECIFICATIONS, AND THE MATERIAL CONTAINED HEREIN. CERTAIN ELEMENTS SHOWN IN THESE DOCUMENTS ARE REGISTERED TRADEMARKS OF AMS. ALL PATENTABLE MATERIALS CONTAINED IN THESE DOCUMENTS AND ORIGINATING WITH AMS WILL REMAIN THE SOLE PROPERTY OF AMS. THESE DRAWING, SPECIFICATIONS, AND THE MATERIAL CONTAINED HEREIN MAY NOT BE REPRODUCED, TRANSMITTED, COPIED, DISTRIBUTED, MODIFIED, OR OTHERWISE DISPOSED OF (DIRECTLY OR INDIRECTLY) AND MAY NOT BE USED (IN WHOLE OR IN PART) TO ASSIST IN THE CONSTRUCTION, DESIGN, OR OTHER MAKING OF, OR FOR THE PURPOSE OF FURNISHING ANY INFORMATION FOR THE CONSTRUCTION, DESIGN, OR OTHER MAKING OF, ANY BUILDINGS (MODULAR OR OTHERWISE), DRAWINGS, SPECIFICATIONS, PRINTS, APPARATUS, OR PARTS THEREOF, EXCEPT AS EXPRESSLY PERMITTED BY WRITTEN CONSENT OF, OR IN A WRITTEN AGREEMENT WITH, AMS. SUBMITTAL OR DISTRIBUTION TO MEET OFFICIAL REGULATORY REQUIREMENTS WILL NOT BE CONSTRUED AS PUBLICATION IN DEROGATION OF AMS'S COPYRIGHT OR OTHER INTELLECTUAL-PROPERTY OR PROPRIETARY RIGHTS.

PRE-CHECKED SET NAME
24' x 40' THRU 120' x 40'
STANDARD MODULAR BUILDING
(HIGH SEISMIC)
FORM®

SITE SPECIFIC PROJECT NAME
.
.
.

APPROVED
DIV. OF THE STATE ARCHITECT
APP: 04-122051 PC
REVIEWED FOR
SS ☑ FLS ☑ ACS ☑ CG ☑
DATE: 04/03/2024

☐ 2022 CBC PRE-CHECK (PC) DOCUMENT
A SEPARATE PROJECT APPLICATION FOR CONSTRUCTION IS REQUIRED.

MANUFACTURER PROFESSIONAL OF RECORD ON PC

LICENSED ARCHITECT
RANDAL PATRICK CAVANAGH
No. C12631
Ren. 3-31-25
STATE OF CALIFORNIA

THESE DRAWINGS ARE PRELIMINARY AND NOT FOR CONSTRUCTION UNLESS STAMPED & SIGNED BY THE DESIGN PROFESSIONAL OF RECORD.

REVISIONS
1
2
3
4

DRAWN BY:	AA
SCALE:	AS NOTED
DATE:	MM/DD/YY
PROJECT NO:	XXXX-22

SHEET TITLE:
TYPICAL SCHEDULES:
DOORS, WINDOWS
& FINISHES

SHEET NUMBER:
N3.0

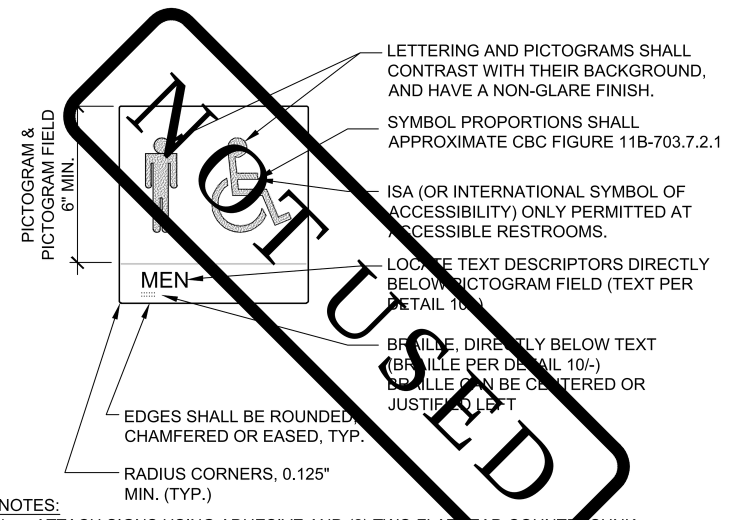

NOTES:
1. ATTACH SIGNS USING ADHESIVE AND (2) TWO FLATHEAD COUNTERSUNK SCREWS, COMPATIBLE WITH WALL MATERIAL.
2. LOCATE PER DETAIL 4/-
3. SIGNS ARE NOT IN MODULAR MFR. SCOPE OF WORK.
4. ISA COLOR AND PROPORTIONS SHALL MATCH CBC FIGURE 11B-703.7.2.1

WALL MOUNTED RESTROOM SYMBOLS-MEN 1
NOT TO SCALE

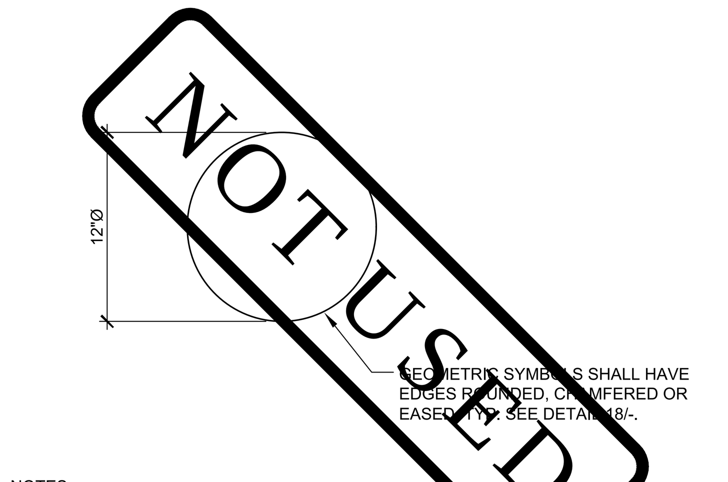

NOTES:
1. ATTACH SIGNS USING ADHESIVE AND (2) TWO FLATHEAD COUNTERSUNK SCREWS, COMPATIBLE WITH DOOR MATERIAL.
2. LOCATE PER DETAIL 4/-.
3. SIGNS ARE NOT IN MODULAR MFR. SCOPE OF WORK.
4. GEOMETRIC SYMBOLS SHALL COMPLY WITH 11B-703.7.2.6 - SEE DETAIL 18/-
5. ISA COLOR AND PROPORTIONS SHALL MATCH CBC FIGURE 11B-703.7.2.1

DOOR MOUNTED RESTROOM SYMBOLS-WOMEN 2
NOT TO SCALE

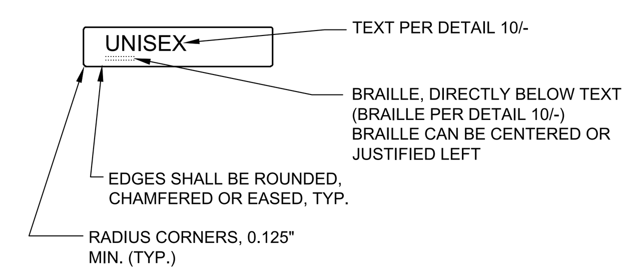

NOTES:
1. ATTACH SIGNS USING ADHESIVE AND (2) TWO FLATHEAD COUNTERSUNK SCREWS, COMPATIBLE WITH WALL MATERIAL.
2. LOCATE PER DETAIL 4/-.
3. SIGNS ARE NOT IN MODULAR MFR. SCOPE OF WORK.
4. THE UNISEX WALL-MOUNTED SIGN SHALL HAVE RAISED TEXT, CORRESPONDING BRAILLE, AND NO PICTOGRAM (DSA BU 17-01)
5. ISA COLOR AND PROPORTIONS SHALL MATCH CBC FIGURE 11B-703.7.2.1

WALL MOUNTED RESTROOM SYMBOLS-UNISEX 3
NOT TO SCALE

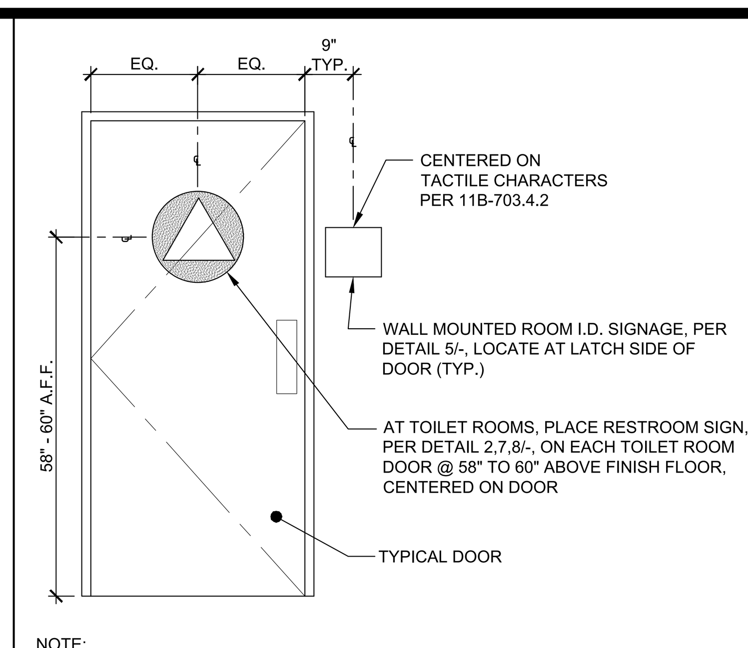

NOTE:
SIGNS ARE NOT IN MODULAR MFR. SCOPE OF WORK.

ROOM IDENTIFICATION SIGNAGE 4
NOT TO SCALE

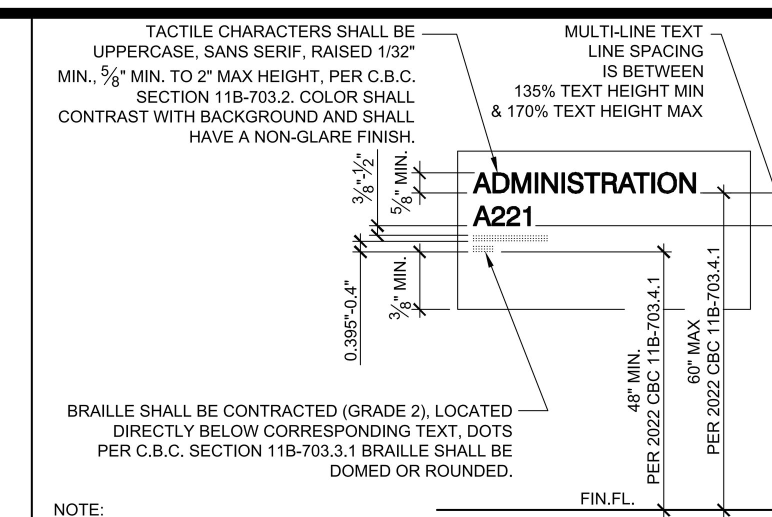

NOTE:
1. PER 11B-216 2022, NEW OR ALTERED SIGNAGE SHALL COMPLY WITH C.B.C. SECTION 11B-703.
2. FOR REQUIRED TACTILE & NON-TACTILE SIGNS LOCATIONS, SEE SHEET N2.0, ACCESSIBILITY STANDARDS, "SECTION 11B-216".
3. SIGNS ARE NOT IN MODULAR MFR. SCOPE OF WORK.
4. ATTACH SIGNS USING ADHESIVE OR MIN (2) TWO FLATHEAD COUNTERSUNK SCREWS, COMPATIBLE WITH WALL MATERIAL.
5. SIGN TO BE PLACED PER DETAIL 4/-

PERMANENT ROOM I.D. SIGNAGE 5
NOT TO SCALE

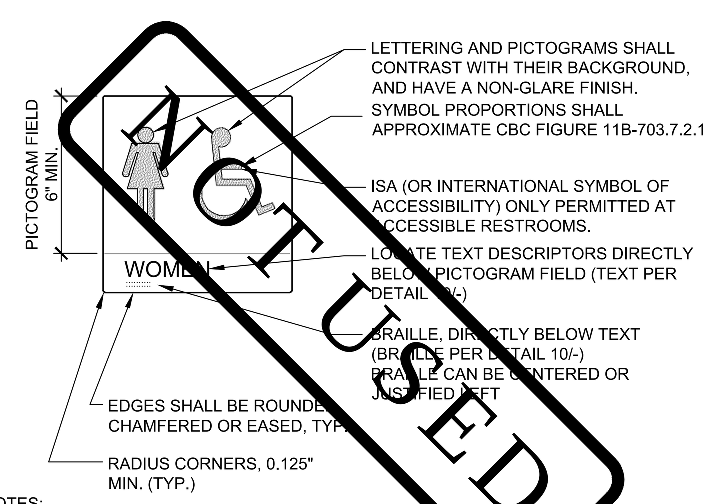

NOTES:
1. ATTACH SIGNS USING ADHESIVE AND (2) TW0 FLATHEAD COUNTERSUNK SCREWS, COMPATIBLE WITH WALL MATERIAL.
2. LOCATE PER DETAIL 4/-
3. SIGNS ARE NOT IN MODULAR MFR. SCOPE OF WORK.
4. ISA COLOR AND PROPORTIONS SHALL MATCH CBC FIGURE 11B-703.7.2.1

WALL MOUNTED RESTROOM SYMBOLS-WOMEN 6
NOT TO SCALE

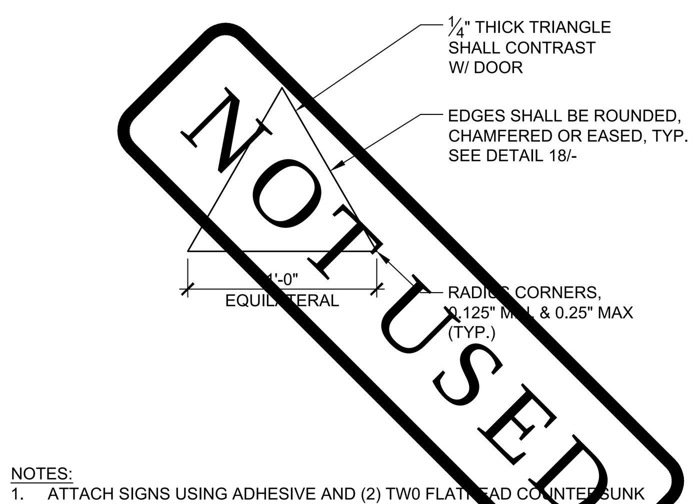

NOTES:
1. ATTACH SIGNS USING ADHESIVE AND (2) TW0 FLATHEAD COUNTERSUNK SCREWS, COMPATIBLE WITH DOOR MATERIAL.
2. LOCATE PER DETAIL 4/-
3. SIGNS ARE NOT IN MODULAR MFR. SCOPE OF WORK.
4. GEOMETRIC SYMBOLS SHALL COMPLY WITH 11B-703.7.2.6 - SEE DETAIL 18/-
5. ISA COLOR AND PROPORTIONS SHALL MATCH CBC FIGURE 11B-703.7.2.1

DOOR MOUNTED RESTROOM SYMBOL-MEN 7
NOT TO SCALE

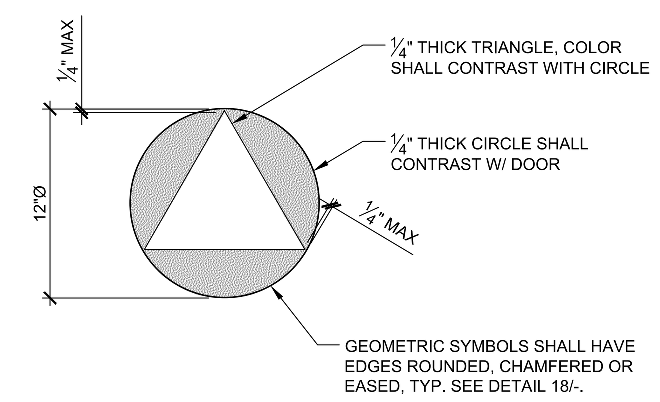

NOTES:
1. ATTACH SIGNS USING ADHESIVE AND (2) TWO FLATHEAD COUNTERSUNK SCREWS, COMPATIBLE WITH DOOR MATERIAL.
2. LOCATE PER DETAIL 4/-
3. SIGNS ARE NOT IN MODULAR MFR. SCOPE OF WORK.
4. GEOMETRIC SYMBOLS SHALL COMPLY WITH 11B-703.7.2.6 - SEE DETAIL 18/-
5. UNISEX DOOR SYMBOL SHALL BE PROVIDED WITHOUT TEXT, BRAILLE OR THE USE OF A PICTOGRAM PER DSA BU 17-01
6. ISA COLOR AND PROPORTIONS SHALL MATCH CBC FIGURE 11B-703.7.2.1

DOOR MOUNTED RESTROOM SYMBOLS-UNISEX 8
NOT TO SCALE

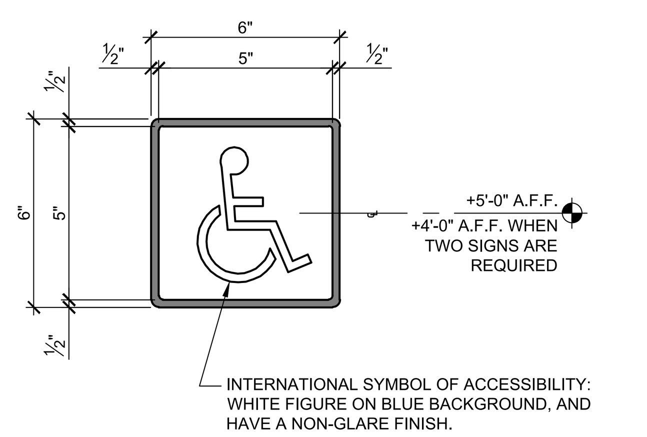

NOTES:
1. PROVIDE MECHANICAL MOUNTING w/VANDAL RESISTANT FASTENERS. PROVIDE ADHESIVE MOUNTING SYSTEM WHEN ATTACHED TO GLAZING.
2. SYMBOL PER C.B.C. SECTION 11B-703.7.2.1
3. SIGNS ARE NOT IN MODULAR MFR. SCOPE OF WORK.

INT'L SYMBOL OF ACCESSIBILITY 9
NOT TO SCALE

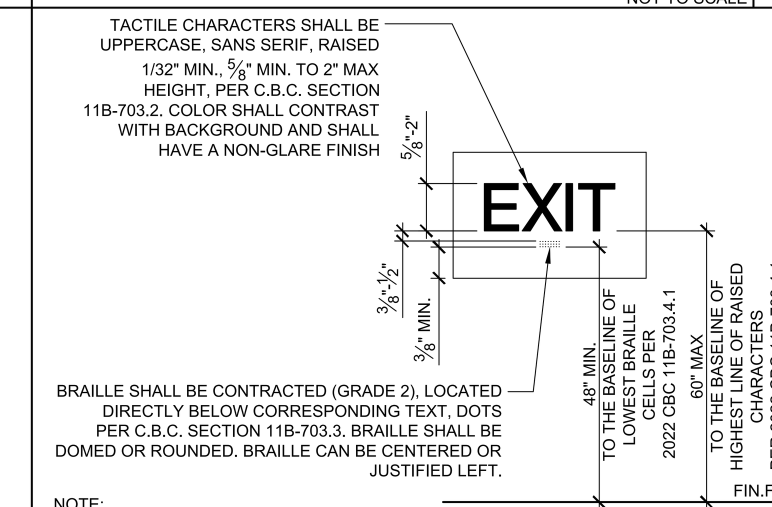

NOTE:
1. PER 11B-216, NEW OR ALTERED SIGNAGE SHALL COMPLY WITH C.B.C. SECTION 11B-703.
2. FOR REQUIRED TACTILE AND NON-TACTILE SIGNS LOCATIONS, SEE SHEET N2.0, ACCESSIBILITY STANDARDS, "SECTION 11B-216".
3. SIGNS ARE NOT IN MODULAR MFR. SCOPE OF WORK.
4. ATTACH SIGNS USING ADHESIVE OR MIN (2) TWO FLATHEAD COUNTERSUNK SCREWS, COMPATIBLE WITH WALL MATERIAL.
5. SIGN TO BE PLACED PER DETAIL 4/-

TACTILE SIGNAGE REQUIREMENTS 10
NOT TO SCALE

A. TYPESTYLE: 1" HIGH BLOCK 1/16" THICK ENGRAVED PLASTIC.

B. MOUNTING: (4) #8x1" SCREWS OR SELF-ADHESIVE. HEIGHT AS SHOWN.

C. CAPACITY POSTING PER C.B.C. SECTION 1004.3 TITLE 19 C.C.R., SECTION 3.30: "THIS ROOM SHALL BE POSTED WITH A DURABLE SIGN NEAR THE MAIN EXIT FROM THE ROOM".

D. THE SIGN SHALL BE WORDED AS FOLLOWS, WITH THE APPROPRIATE CAPACITY NUMBER LISTED:

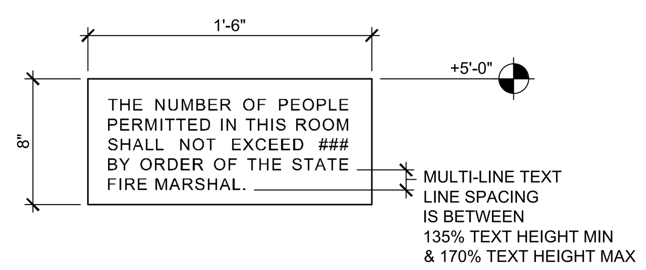

NOTES:
1. SIGNS ARE NOT IN MODULAR MFR. SCOPE OF WORK.
2. 11B-216.3 SIGNS THAT PROVIDE INFORMATION ABOUT INTERIOR SPACES SHALL COMPLY WITH SECTION 11B-703.5

OCCUPANT LOAD SIGN 11
NOT TO SCALE

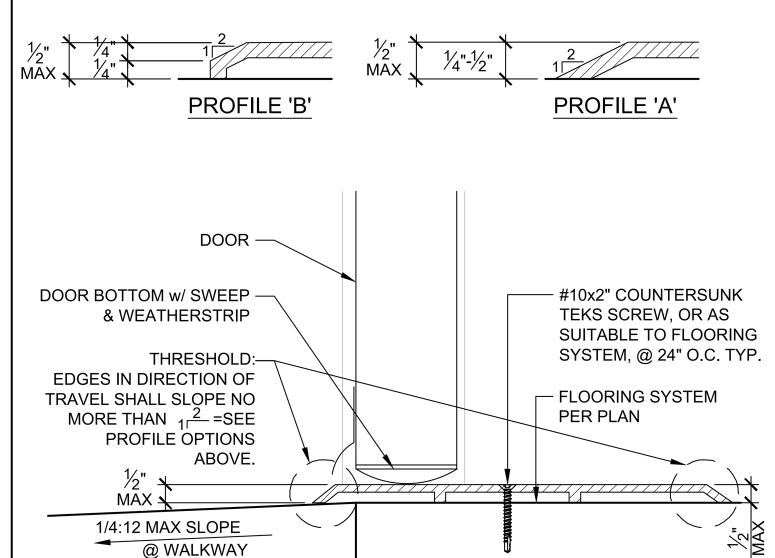

THRESHOLD @ EXTERIOR DOOR 12
NOT TO SCALE

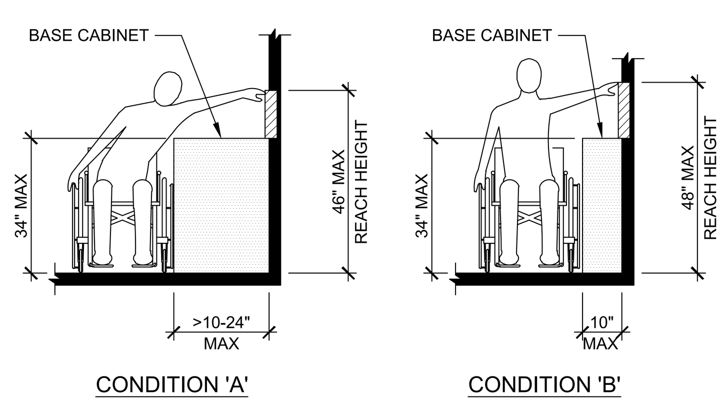

SIDE REACH AT BASE CABINET 13
NOT TO SCALE

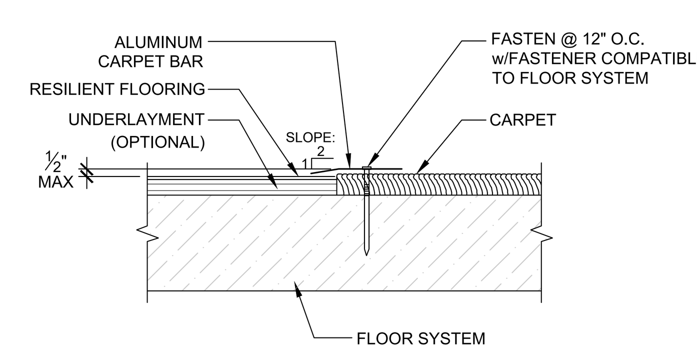

FLOORING TRANSITION DETAIL 14
NOT TO SCALE

ACCESSIBLE MEANS OF EGRESS SHALL BE PROVIDED AT THE FOLLOWING: (PER CBC 1009.10)

SIGN REQUIREMENTS PER DETAIL 10/- & 16/-

- AT EXIT WAYS (PER C.B.C. 1013.4)
  1. AT EACH GRADE LEVEL EXTERIOR EXIT DOOR
  2. AT AN EXIT BY MEANS OF A RAMP ("EXIT RAMP DOWN")
  3. AT AN EXIT ROUTE VIA ENCLOSURE, PASSAGEWAY, CORRIDOR, HALLWAY, ETC.

SIGNAGE PER C.B.C. SECTION 11B-216. (ALSO REFER TO SECTIONS 11B-703, 1009.9, 1009.10, 1023.9)

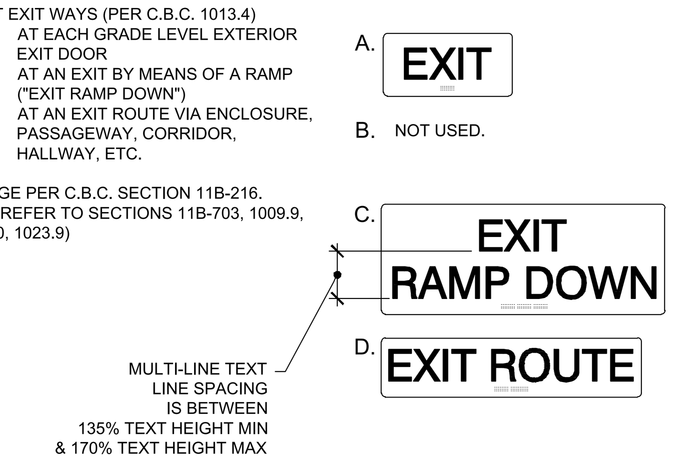

NOTE:
1. SIGNS ARE NOT IN MODULAR MFR. SCOPE OF WORK.

EGRESS SIGNAGE 15
NOT TO SCALE

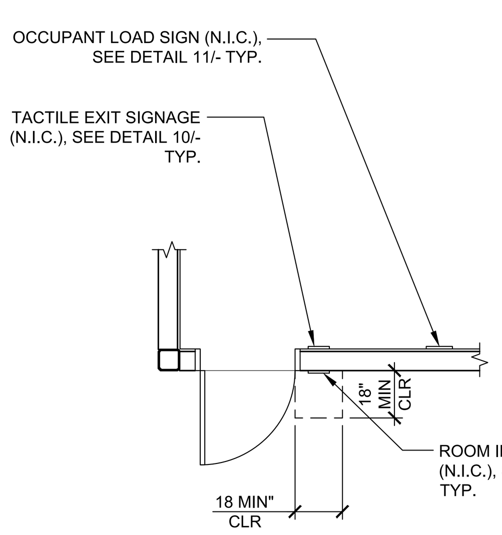

NOTE:

18" MIN CLEAR FLOOR SPACE SHALL BE CENTERED ON THE TACTILE CHARACTERS OF THE SIGN PER 11B-703.4.4.2

TYPICAL CLASSROOM SIGNAGE LOCATION 16
NOT TO SCALE

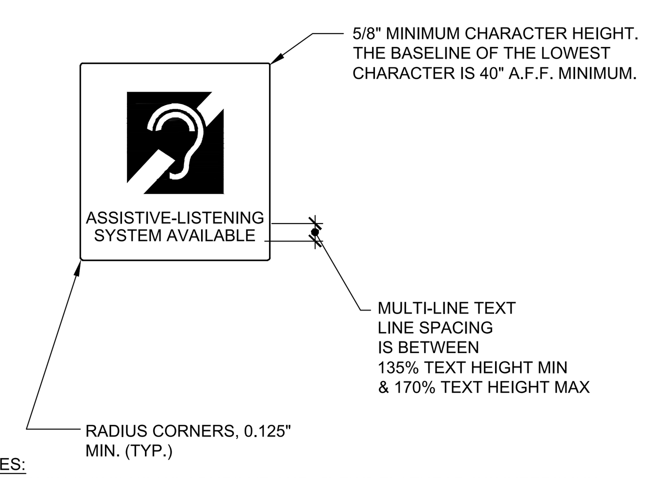

NOTES:
1. ATTACH SIGNS USING ADHESIVE AND (2) TW0 FLATHEAD COUNTERSUNK SCREWS, COMPATIBLE WITH WALL MATERIAL.
2. LOCATE AT OR NEAR THE ENTRANCE IN A PROMINENT PLACE. (11B-216.10)
3. SIGNS ARE NOT IN MODULAR MFR. SCOPE OF WORK.
4. SYMBOL PER CBC SECTION 11B-703.7.2.4
5. THE SIGN SHALL COMPLY WITH 11B-703.5 AND TABLE 11B-703.5.5.
6. ISA COLOR AND PROPORTIONS SHALL MATCH CBC FIGURE 11B-703.7.2.1

ASSISTIVE LISTENING SIGN 17
NOT TO SCALE

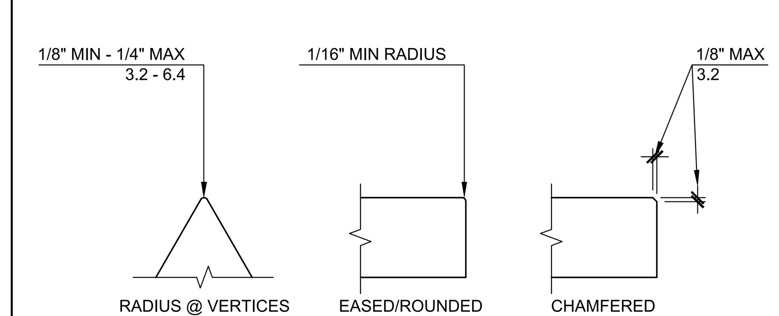

FIGURE 11B-703.7.2.6.4
EDGES AND VERTICES ON GEOMETRIC SYMBOLS

NOTES:
1. FIGURE PER 11B-703.7.2.6.4

EDGES AND VERTICES ON GEOMETRIC SYMBOLS 18
NOT TO SCALE

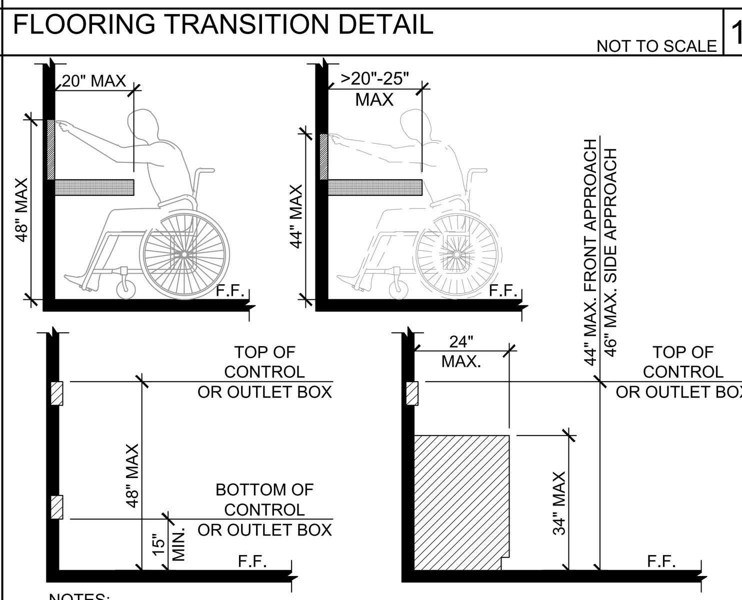

NOTES:
1. COMPLY WITH CBC 11B-308.2.2 AND 11B-308.3.2
2. FORWARD OR FRONT APPROACH FOR DEVICES MOUNTED ABOVE A COUNTER ASSUMES THAT DIRECTLY BELOW THE DEVICE, THE COUNTER HAS A 30" MINIMUM WIDTH x 27" MINIMUM HEIGHT x A CLEAR DEPTH EQUAL TO THE DEPTH OF THE COUNTER NOT TO EXCEED 24".

DEVICE MOUNTING OVER OBSTRUCTION DETAIL 19
SCALE: 1-1/2" = 1'-0"

SIGNS AND IDENTIFICATION DEVICES SHALL BE FIELD INSPECTED AFTER INSTALLATION AND APPROVED BY THE ENFORCING AGENCY PRIOR TO THE ISSUANCE OF A FINAL CERTIFICATE OF OCCUPANCY PER CHAPTER 1, DIVISION II, SECTION 111, OR FINAL APPROVAL WHERE NO CERTIFICATE OF OCCUPANCY IS ISSUED. THE INSPECTION SHALL INCLUDE, BUT NOT BE LIMITED TO, VERIFICATION THAT BRAILLE DOTS AND CELLS ARE PROPERLY SPACED AND THE SIZE, PROPORTION AND TYPE OF RAISED CHARACTERS ARE IN COMPLIANCE WITH THESE REGULATIONS PER CBC SECTION 11B-703.1.1.2

SHEET NOTES

IDENTIFICATION STAMP
DIV. OF THE STATE ARCHITECT
APP: 03-124589 INC:
REVIEWED FOR
SS ☑ FLS ☑ ACS ☑
DATE: 04/15/2025

American Modular Systems
787 Spreckels Ave., Manteca, CA 95336
Phone (209) 825-1921 Fax (209) 825-7018
www.americanmodular.com

INTELLECTUAL-PROPERTY & PROPRIETARY RIGHTS STATEMENT
COPYRIGHT © AMERICAN MODULAR SYSTEMS (AMS)
AMS OWNS ALL COPYRIGHT AND OTHER INTELLECTUAL-PROPERTY AND PROPRIETARY RIGHTS IN THESE DRAWINGS, SPECIFICATIONS, AND THE MATERIAL CONTAINED HEREIN. CERTAIN ELEMENTS SHOWN IN THESE DOCUMENTS ARE REGISTERED TRADEMARKS OF AMS. ALL PATENTABLE MATERIALS CONTAINED IN THESE DOCUMENTS AND ORIGINATING WITH AMS WILL REMAIN THE SOLE PROPERTY OF AMS. THESE DRAWING, SPECIFICATIONS, AND THE MATERIAL CONTAINED HEREIN MAY NOT BE REPRODUCED, TRANSMITTED, COPIED, DISTRIBUTED, MODIFIED, OR OTHERWISE DISPOSED OF (DIRECTLY OR INDIRECTLY) AND MAY NOT BE USED (IN WHOLE OR IN PART) TO ASSIST IN THE CONSTRUCTION, DESIGN, OR OTHER MAKING OF, OR FOR THE PURPOSE OF FURNISHING ANY INFORMATION FOR THE CONSTRUCTION, DESIGN, OR OTHER MAKING OF, ANY BUILDINGS (MODULAR OR OTHERWISE), DRAWINGS, SPECIFICATIONS, PRINTS, APPARATUS, OR PARTS THEREOF, EXCEPT AS EXPRESSLY PERMITTED BY WRITTEN CONSENT OF, OR IN A WRITTEN AGREEMENT WITH, AMS. SUBMITTAL OR DISTRIBUTION TO MEET OFFICIAL REGULATORY REQUIREMENTS WILL NOT BE CONSTRUED AS PUBLICATION IN DEROGATION OF AMS'S COPYRIGHT OR OTHER INTELLECTUAL-PROPERTY OR PROPRIETARY RIGHTS.

PRE-CHECKED SET NAME
24' x 40' THRU 120' x 40'
STANDARD MODULAR BUILDING
(HIGH SEISMIC)

FORM

SITE SPECIFIC PROJECT NAME
VENTURA COLLEGE
(1) 72'x40' BUILDING

APPROVED
DIV. OF THE STATE ARCHITECT
APP: 04-122051 PC
REVIEWED FOR
SS ☑ FLS ☑ ACS ☑ CG ☑
DATE: 04/03/2024

☒ 2022 CBC PRE-CHECK (PC) DOCUMENT
A SEPARATE PROJECT APPLICATION FOR CONSTRUCTION IS REQUIRED.

MANUFACTURER PROFESSIONAL OF RECORD ON PC

THESE DRAWINGS ARE PRELIMINARY AND NOT FOR CONSTRUCTION UNLESS STAMPED & SIGNED BY THE DESIGN PROFESSIONAL OF RECORD.

REVISIONS
1
2
3
4

DRAWN BY:	AA
SCALE:	AS NOTED
DATE:	MM/DD/YY
PROJECT NO:	XXXX-22

SHEET TITLE:
ACCESSIBILITY STANDARDS AND DETAILS

SHEET NUMBER:
N4.0

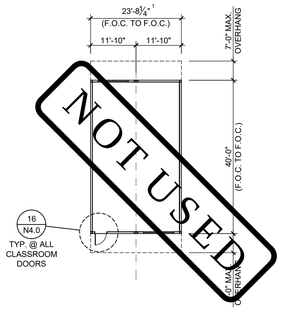

BUILDING DATA						
BUILDING OCCUAPANCY	BUILDING SIZE	OVERALL SIZE[1]	SQUARE FOOTAGE PER FLOOR*	SQ.FT. ALLOWED PER FLOOR	MAXIMUM OCCUPANT LOAD (150 FOR B, 20 FOR E)	EGRESS INCHES REQUIRED (0.2 PER OCCUPANT)
☐ E	24' x 40'	23' - 8 ¼"	960	9500	48	9.6**
☐ B*	24' x 40'	23' - 8 ¼"	960	9000	7	1.28**

**MINIMUM EGRESS WIDTH SHALL BE 34" , OR DIMENSION GIVEN IN BUILDING DATA, WHICHEVER IS GREATER.
*FOR COLLEGE ROOMS THAT ARE USED FOR TEACHING, THE OCCUPANT LOAD FACTOR IS ALSO "20", LIKE "E" OCCUPANCIES.

24' x 40' BUILDING FLOOR PLAN — SCALE: 1/16" = 1'-0" — 1

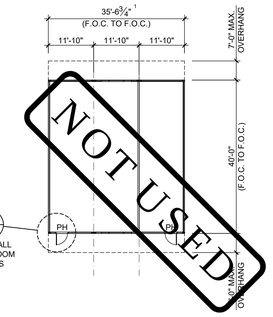

BUILDING DATA						
BUILDING OCCUAPANCY	BUILDING SIZE	OVERALL SIZE[1]	SQUARE FOOTAGE PER FLOOR*	SQ.FT. ALLOWED PER FLOOR	MAXIMUM OCCUPANT LOAD (150 FOR B, 20 FOR E)	EGRESS INCHES REQUIRED (0.2 PER OCCUPANT)
☐ E	36' x 40'	35'-6 ¾"	1440	9500	72	14.4**
☐ B*	36' x 40'	35'-6 ¾"	1440	9000	10	1.92**

**MINIMUM EGRESS WIDTH SHALL BE 34" , OR DIMENSION GIVEN IN BUILDING DATA, WHICHEVER IS GREATER.
*FOR COLLEGE ROOMS THAT ARE USED FOR TEACHING, THE OCCUPANT LOAD FACTOR IS ALSO "20", LIKE "E" OCCUPANCIES.

PH = PANIC HARDWARE

36' x 40' BUILDING FLOOR PLAN — SCALE: 1/16" = 1'-0" — 2

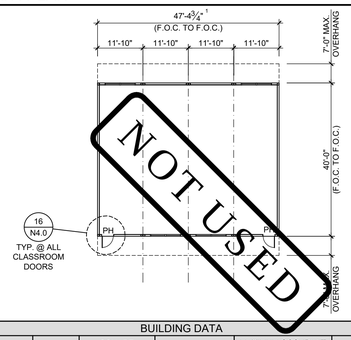

BUILDING DATA						
BUILDING OCCUAPANCY	BUILDING SIZE	OVERALL SIZE[1]	SQUARE FOOTAGE PER FLOOR*	SQ.FT. ALLOWED PER FLOOR	MAXIMUM OCCUPANT LOAD (150 FOR B, 20 FOR E)	EGRESS INCHES REQUIRED (0.2 PER OCCUPANT)
☐ E	48' x 40'	47'-4 ¾"	1920	9500	96	19.2**
☐ B*	48' x 40'	47'-4 ¾"	1920	9000	13	2.6**

**MINIMUM EGRESS WIDTH SHALL BE 34" , OR DIMENSION GIVEN IN BUILDING DATA, WHICHEVER IS GREATER.
*FOR COLLEGE ROOMS THAT ARE USED FOR TEACHING, THE OCCUPANT LOAD FACTOR IS ALSO "20", LIKE "E" OCCUPANCIES.

PH = PANIC HARDWARE

48' x 40' BUILDING FLOOR PLAN — SCALE: 1/16" = 1'-0" — 3

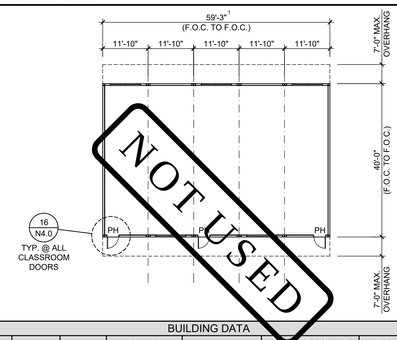

BUILDING DATA						
BUILDING OCCUAPANCY	BUILDING SIZE	OVERALL SIZE[1]	SQUARE FOOTAGE PER FLOOR*	SQ.FT. ALLOWED PER FLOOR	MAXIMUM OCCUPANT LOAD (150 FOR B, 20 FOR E)	EGRESS INCHES REQUIRED (0.2 PER OCCUPANT)
☐ E	60' x 40'	59'-3"	2400	9500	120	24**
☐ B*	60' x 40'	59'-3"	2400	9000	16	3.2**

**MINIMUM EGRESS WIDTH SHALL BE 34" , OR DIMENSION GIVEN IN BUILDING DATA, WHICHEVER IS GREATER.
*FOR COLLEGE ROOMS THAT ARE USED FOR TEACHING, THE OCCUPANT LOAD FACTOR IS ALSO "20", LIKE "E" OCCUPANCIES.

PH = PANIC HARDWARE

60' x 40' BUILDING FLOOR PLAN — SCALE: 1/16" = 1'-0" — 4

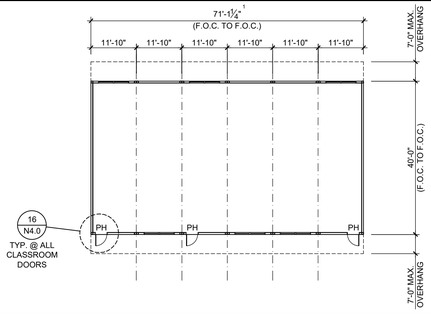

BUILDING DATA						
BUILDING OCCUAPANCY	BUILDING SIZE	OVERALL SIZE[1]	SQUARE FOOTAGE PER FLOOR*	SQ.FT. ALLOWED PER FLOOR	MAXIMUM OCCUPANT LOAD (150 FOR B, 20 FOR E)	EGRESS INCHES REQUIRED (0.2 PER OCCUPANT)
☐ E	72' x 40'	71'-1 ¼"	2880	9500	144	28.8**
☐ B*	72' x 40'	71'-1 ¼"	2880	9000	19	3.84**

**MINIMUM EGRESS WIDTH SHALL BE 34" , OR DIMENSION GIVEN IN BUILDING DATA, WHICHEVER IS GREATER.
*FOR COLLEGE ROOMS THAT ARE USED FOR TEACHING, THE OCCUPANT LOAD FACTOR IS ALSO "20", LIKE "E" OCCUPANCIES.

PH = PANIC HARDWARE

72' x 40' BUILDING FLOOR PLAN — SCALE: 1/16" = 1'-0" — 5

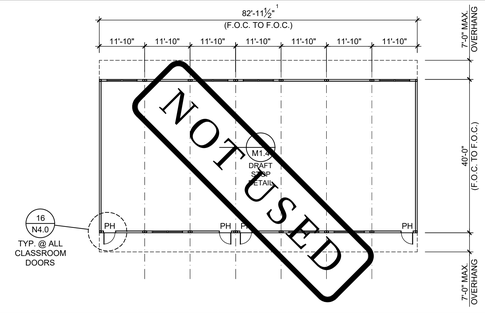

BUILDING DATA						
BUILDING OCCUAPANCY	BUILDING SIZE	OVERALL SIZE[1]	SQUARE FOOTAGE PER FLOOR*	SQ.FT. ALLOWED PER FLOOR	MAXIMUM OCCUPANT LOAD (150 FOR B, 20 FOR E)	EGRESS INCHES REQUIRED (0.2 PER OCCUPANT)
☐ E	84' x 40'	82'-11 ½"	3360	9500	168	33.6**
☐ B*	84' x 40'	82'-11 ½"	3360	9000	23	4.48**

**MINIMUM EGRESS WIDTH SHALL BE 34" , OR DIMENSION GIVEN IN BUILDING DATA, WHICHEVER IS GREATER.
*FOR COLLEGE ROOMS THAT ARE USED FOR TEACHING, THE OCCUPANT LOAD FACTOR IS ALSO "20", LIKE "E" OCCUPANCIES.

PH = PANIC HARDWARE

84' x 40' BUILDING FLOOR PLAN — SCALE: 1/16" = 1'-0" — 6

1. PANIC HARDWARE IS REQUIRED TO BE INSTALLED WHEN THE CONFIGURATION OF ANY ROOM PROVIDES AN OCCUPANT LOAD OF 50 OR GREATER, PER CBC 1010.1.10.
2. NOT USED
3. RESTROOM CONFIGURATIONS OCCUR AT OUTER WINGS OF BUILDINGS.
4. SEE FOUNDATION DRAWINGS FOR TRUE DIMENSIONS AT FLOOR PLACEMENT AND OVERALL FOUNDATION SIZE.
5. FOR ROOM ID SIGNAGE (N.I.C.) SEE DETAIL 5/N4.0. TYPICAL FOR ALL BUILDING CONFIGURATIONS.
6. MINIMUM EGRESS REQUIRED SHALL BE 34" PER CLASSROOM OR DIMENSION SPECIFIED IN BUILDING DATA, WHICHEVER IS GREATER
7. TOTAL WIDTH INCLUDES 1/4" PER MODULE CONSTRUCTION TOLERANCE PER FOUNDATION SHEETS.
8. BUILDING DATA REPORTED ON THIS SHEET IS INTENDED FOR OCCUPANT LOAD AND EGRESS. TOTAL BUILDING SQUARE FOOTAGE WHICH INCLUDES AREA FROM SITE SPECIFIC OVERHANGS OR PROJECTIONS IS NOT INCLUDED.
9. THE CONFIGURATIONS SHOWN ARE OVERALL BUILDING FOOTPRINTS. INTERIOR WALLS/PARTITIONS (IF APPLICABLE) ARE NOT SHOWN FOR CLARITY.

SITE NOTE:
3/16"-12 (1%) MINIMUM TO ¼"-12 (2%) MAXIMUM GRADE FROM FACE OF BUILDING MUST BE ADHERED TO FOR WATER RUN-OFF. PONDING MAY OCCUR AROUND THE PERIMETER OF THE BUILDING.

GENERAL NOTES

IDENTIFICATION STAMP
DIV. OF THE STATE ARCHITECT
APP: 03-124589 INC:
REVIEWED FOR
SS ☑ FLS ☑ ACS ☑
DATE: 04/15/2025

AMS®
American Modular Systems
787 Spreckels Ave., Manteca, CA 95336
Phone (209) 825-1921 Fax (209) 825-7018
www.americanmodular.com

INTELLECTUAL-PROPERTY & PROPRIETARY RIGHTS STATEMENT
COPYRIGHT © AMERICAN MODULAR SYSTEMS (AMS)
AMS OWNS ALL COPYRIGHT AND OTHER INTELLECTUAL PROPERTY AND PROPRIETARY RIGHTS IN THESE DOCUMENTS. THE NAMES, LOGOS, AND SLOGANS USED HEREIN CERTAIN ELEMENTS SHOWN IN THESE DOCUMENTS ARE REGISTERED TRADEMARKS OF AMS. ALL PATENTABLE MATERIALS CONTAINED IN THESE DOCUMENTS AND ORIGINATING WITH AMS WILL REMAIN THE SOLE PROPERTY OF AMS. THESE DRAWING, SPECIFICATIONS AND THE MATERIAL CONTAINED HEREIN MAY NOT BE REPRODUCED, TRANSMITTED, COPIED, DISTRIBUTED, MODIFIED, OR OTHERWISE DISPOSED OF (DIRECTLY OR INDIRECTLY) AND MAY NOT BE USED (IN WHOLE OR IN PART) TO ASSIST IN THE CONSTRUCTION, DESIGN, OR OTHER MAKING OF, OR FOR THE PURPOSE OF FURNISHING ANY INFORMATION FOR THE CONSTRUCTION, DESIGN, OR OTHER MAKING OF, ANY BUILDINGS (MODULAR OR OTHERWISE), DRAWINGS, SPECIFICATIONS, PRINTS, APPARATUS, OR PARTS THEREOF, EXCEPT AS EXPRESSLY PERMITTED BY WRITTEN CONSENT OF, OR IN A WRITTEN AGREEMENT WITH, AMS. SUBMITTAL OR DISTRIBUTION TO MEET OFFICIAL REGULATORY REQUIREMENTS WILL NOT BE CONSTRUED AS PUBLICATION IN DEROGATION OF AMS'S COPYRIGHT OR OTHER INTELLECTUAL-PROPERTY OR PROPRIETARY RIGHTS.

PRE-CHECKED SET NAME
24' x 40' THRU 120' x 40'
STANDARD MODULAR BUILDING
(HIGH SEISMIC)
FORM®

SITE SPECIFIC PROJECT NAME
VENTURA COLLEGE
(1) 72'x40' BUILDING

APPROVED
DIV. OF THE STATE ARCHITECT
APP: 04-122051 PC
REVIEWED FOR
SS ☑ FLS ☑ ACS ☑ CG ☑
DATE: 04/03/2024

☒ 2022 CBC PRE-CHECK (PC) DOCUMENT
A SEPARATE PRELIMINARY APPLICATION FOR CONSTRUCTION IS REQUIRED

MANUFACTURER PROFESSIONAL OF RECORD ON PC

LICENSED ARCHITECT
PATRICK O'BRIEN
No. C12631
Ren. 3-31-25
STATE OF CALIFORNIA

THESE DRAWINGS ARE PRELIMINARY AND NOT FOR CONSTRUCTION UNLESS STAMPED & SIGNED BY THE DESIGN PROFESSIONAL OF RECORD.

REVISIONS
1
2
3
4

DRAWN BY:	AA
SCALE:	AS NOTED
DATE:	MM/DD/YY
PROJECT NO:	XXXX-22

SHEET TITLE:
MULTIPLE FLOOR PLAN CONFIGURATIONS

SHEET NUMBER:
N5.0

AMS 24x40

CZ Group	Climate Zone / Reference City	Roof Rigid R-value[1]	Ground Floor R-value[3]	Metal Stud Wall R-value[2]	Window U-factor[4]	Window SHGC[4]	Air Barrier (Y/N)	Cool Roof (Y/N)	CO Sensor (Y/N)	FC-1 Unit Type[5]	Number of FC-1 Units[6]	OSA per FC-1 (cfm)[7]	FC-2 Unit Type[5]	Number of FC-2 Units[6]	OSA per FC-2 (cfm)[7]	Design PV (kW DC)
A	CZ01 Arcata; **CZ16 Blue Canyon**	R-15 ci	R-5 ci	R-5 ci	0.42	0.25	Y	N	N	W42HC	1	364.8	na	0	na	0.0
B	CZ02 Santa Rosa; CZ03 Oakland; CZ04 San Jose-Reid; **CZ05 Santa Maria**	R-5 ci	na	R-5 ci	0.42	0.25	Y	N	N	W42HC	1	364.8	na	0	na	0.0
C	CZ06 Torrance; CZ07 San Diego-Lindbergh; CZ08 Fullerton; CZ09 Burbank-Glendale; CZ10 Riverside; CZ11 Red Bluff; CZ12 Sacramento; **CZ13 Fresno**	R-5 ci	na	R-5 ci	0.42	0.25	Y	N	N	W42HC	1	364.8	na	0	na	0.0
D	CZ14 Palmdale; **CZ15 Palm Spring-Intl**	R-5 ci	na	R-5 ci	0.42	0.25	Y	N	N	W42HC	1	364.8	na	0	na	0.0

AMS 36x40

CZ Group	Climate Zone / Reference City	Roof Rigid R-value[1]	Ground Floor R-value[3]	Metal Stud Wall R-value[2]	Window U-factor[4]	Window SHGC[4]	Air Barrier (Y/N)	Cool Roof (Y/N)	CO Sensor (Y/N)	FC-1 Unit Type[5]	Number of FC-1 Units[6]	OSA per FC-1 (cfm)[7]	FC-2 Unit Type[5]	Number of FC-2 Units[6]	OSA per FC-2 (cfm)[7]	Design PV (kW DC)
A	CZ01 Arcata; **CZ16 Blue Canyon**	R-15 ci	R-5 ci	R-5 ci	0.42	0.25	Y	N	N	W42HC	1	547.2	na	0	na	0.0
B	CZ02 Santa Rosa; CZ03 Oakland; CZ04 San Jose-Reid; **CZ05 Santa Maria**	R-5 ci	na	R-5 ci	0.42	0.25	Y	N	N	W42HC	1	547.2	na	0	na	0.0
C	CZ06 Torrance; CZ07 San Diego-Lindbergh; CZ08 Fullerton; CZ09 Burbank-Glendale; CZ10 Riverside; CZ11 Red Bluff; CZ12 Sacramento; **CZ13 Fresno**	R-5 ci	na	R-5 ci	0.42	0.25	Y	N	Y	SysAir 4T	1	547.2	na	0	na	0.0
D	CZ14 Palmdale; **CZ15 Palm Spring-Intl**	R-5 ci	na	R-5 ci	0.42	0.25	Y	N	Y	SysAir 4T	1	547.2	na	0	na	0.0

AMS 48x40

CZ Group	Climate Zone / Reference City	Roof Rigid R-value[1]	Ground Floor R-value[3]	Metal Stud Wall R-value[2]	Window U-factor[4]	Window SHGC[4]	Air Barrier (Y/N)	Cool Roof (Y/N)	CO Sensor (Y/N)	FC-1 Unit Type[5]	Number of FC-1 Units[6]	OSA per FC-1 (cfm)[7]	FC-2 Unit Type[5]	Number of FC-2 Units[6]	OSA per FC-2 (cfm)[7]	Design PV (kW DC)
A	CZ01 Arcata; **CZ16 Blue Canyon**	R-15 ci	R-5 ci	R-5 ci	0.42	0.25	Y	N	N	W42HC	2	364.8	na	0	na	0.0
B	CZ02 Santa Rosa; CZ03 Oakland; CZ04 San Jose-Reid; **CZ05 Santa Maria**	R-5 ci	na	R-5 ci	0.42	0.25	Y	N	N	W42HC	2	364.8	na	0	na	0.0
C	CZ06 Torrance; CZ07 San Diego-Lindbergh; CZ08 Fullerton; CZ09 Burbank-Glendale; CZ10 Riverside; CZ11 Red Bluff; CZ12 Sacramento; **CZ13 Fresno**	R-5 ci	na	R-5 ci	0.42	0.25	Y	N	N	W42HC	2	364.8	na	0	na	0.0
D	CZ14 Palmdale; **CZ15 Palm Spring-Intl**	R-5 ci	na	R-5 ci	0.42	0.25	Y	N	N	W42HC	2	364.8	na	0	na	1.5 / 2.2

PC 60x40

CZ Group	Climate Zone / Reference City	Roof Rigid R-value[1]	Ground Floor R-value[3]	Metal Stud Wall R-value[2]	Window U-factor[4]	Window SHGC[4]	Air Barrier (Y/N)	Cool Roof (Y/N)	CO Sensor (Y/N)	FC-1 Unit Type[5]	Number of FC-1 Units[6]	OSA per FC-1 (cfm)[7]	FC-2 Unit Type[5]	Number of FC-2 Units[6]	OSA per FC-2 (cfm)[7]	Design PV (kW DC)
A	CZ01 Arcata; **CZ16 Blue Canyon**	R-15 ci	R-5 ci	R-5 ci	0.42	0.25	Y	N	N	W42HC	2	456.0	na	0	na	0.0
B	CZ02 Santa Rosa; CZ03 Oakland; CZ04 San Jose-Reid; **CZ05 Santa Maria**	R-5 ci	na	R-5 ci	0.42	0.25	Y	N	N	W42HC	2	456	na	0	na	0.0
C	CZ06 Torrance; CZ07 San Diego-Lindbergh; CZ08 Fullerton; CZ09 Burbank-Glendale; CZ10 Riverside; CZ11 Red Bluff; CZ12 Sacramento; **CZ13 Fresno**	R-5 ci	na	R-5 ci	0.42	0.25	Y	N	N	W42HC	2	456	na	0	na	0.0
D	CZ14 Palmdale; **CZ15 Palm Spring-Intl**	R-5 ci	na	R-5 ci	0.42	0.25	Y	N	N	W60HC	2	456	na	0	na	3.6 / 5.2

PC 72x40

CZ Group	Climate Zone / Reference City	Roof Rigid R-value[1]	Ground Floor R-value[3]	Metal Stud Wall R-value[2]	Window U-factor[4]	Window SHGC[4]	Air Barrier (Y/N)	Cool Roof (Y/N)	CO Sensor (Y/N)	FC-1 Unit Type[5]	Number of FC-1 Units[6]	OSA per FC-1 (cfm)[7]	FC-2 Unit Type[5]	Number of FC-2 Units[6]	OSA per FC-2 (cfm)[7]	Design PV (kW DC)
A	CZ01 Arcata; **CZ16 Blue Canyon**	R-15 ci	R-5 ci	R-5 ci	0.42	0.25	Y	N	N	W42HC	2	547.2	na	0	na	0.0
B	CZ02 Santa Rosa; CZ03 Oakland; CZ04 San Jose-Reid; **CZ05 Santa Maria**	R-5 ci	na	R-5 ci	0.42	0.25	Y	N	N	W42HC	2	547.2	na	0	na	0.0
C	CZ06 Torrance; CZ07 San Diego-Lindbergh; CZ08 Fullerton; CZ09 Burbank-Glendale; CZ10 Riverside; CZ11 Red Bluff; CZ12 Sacramento; **CZ13 Fresno**	R-5 ci	na	R-5 ci	0.42	0.25	Y	N	Y	SysAir 4T	2	547.2	na	0	na	3.2
D	CZ14 Palmdale; **CZ15 Palm Spring-Intl**	R-5 ci	na	R-5 ci	0.42	0.25	Y	N	Y	SysAir 4T	2	547.2	na	0	na	3.6 / 5.6

AMS 84x40

CZ Group	Climate Zone / Reference City	Roof Rigid R-value[1]	Ground Floor R-value[3]	Metal Stud Wall R-value[2]	Window U-factor[4]	Window SHGC[4]	Air Barrier (Y/N)	Cool Roof (Y/N)	CO Sensor (Y/N)	FC-1 Unit Type[5]	Number of FC-1 Units[6]	OSA per FC-1 (cfm)[7]	FC-2 Unit Type[5]	Number of FC-2 Units[6]	OSA per FC-2 (cfm)[7]	Design PV (kW DC)
A	CZ01 Arcata; **CZ16 Blue Canyon**	R-15 ci	R-15ci	R-5 ci	0.42	0.25	Y	N	N	W42HC	2	364.8	W42HC	1	547.2	3.9
B	CZ02 Santa Rosa; CZ03 Oakland; CZ04 San Jose-Reid; **CZ05 Santa Maria**	R-5 ci	na	R-5 ci	0.42	0.25	Y	N	N	W42HC	2	364.8	W42HC	1	547.2	1.0 / 0.8 / 1.0 / 0.8
C	CZ06 Torrance; CZ07 San Diego-Lindbergh; CZ08 Fullerton; CZ09 Burbank-Glendale; CZ10 Riverside; CZ11 Red Bluff; CZ12 Sacramento; **CZ13 Fresno**	R-5 ci	na	R-5 ci	0.42	0.25	Y	N	Y	SysAir 4T	2	364.8	SysAir 4T	1	547.2	0.0
D	CZ14 Palmdale; **CZ15 Palm Spring-Intl**	R-5 ci	na	R-5 ci	0.42	0.25	Y	N	Y	SysAir 4T	2	364.8	SysAir 5T	1	547.2	2.1 / 3.2

AMS 96x40

CZ Group	Climate Zone / Reference City	Roof Rigid R-value[1]	Ground Floor R-value[3]	Metal Stud Wall R-value[2]	Window U-factor[4]	Window SHGC[4]	Air Barrier (Y/N)	Cool Roof (Y/N)	CO Sensor (Y/N)	FC-1 Unit Type[5]	Number of FC-1 Units[6]	OSA per FC-1 (cfm)[7]	FC-2 Unit Type[5]	Number of FC-2 Units[6]	OSA per FC-2 (cfm)[7]	Design PV (kW DC)
A	CZ01 Arcata; **CZ16 Blue Canyon**	R-15 ci	R-5 ci	R-5 ci	0.42	0.25	Y	N	N	W42HC	4	364.8	na	0	na	0.2
B	CZ02 Santa Rosa; CZ03 Oakland; CZ04 San Jose-Reid; **CZ05 Santa Maria**	R-5 ci	na	R-5 ci	0.42	0.25	Y	N	N	W42HC	4	364.8	na	0	na	0.0
C	CZ06 Torrance; CZ07 San Diego-Lindbergh; CZ08 Fullerton; CZ09 Burbank-Glendale; CZ10 Riverside; CZ11 Red Bluff; CZ12 Sacramento; **CZ13 Fresno**	R-5 ci	na	R-5 ci	0.42	0.25	Y	N	N	W42HC	4	364.8	na	0	na	0.0
D	CZ14 Palmdale; **CZ15 Palm Spring-Intl**	R-5 ci	na	R-5 ci	0.42	0.25	Y	N	N	W42HC	4	364.8	na	0	na	3.6 / 5.4

AMS 108x40

CZ Group	Climate Zone / Reference City	Roof Rigid R-value[1]	Ground Floor R-value[3]	Metal Stud Wall R-value[2]	Window U-factor[4]	Window SHGC[4]	Air Barrier (Y/N)	Cool Roof (Y/N)	CO Sensor (Y/N)	FC-1 Unit Type[5]	Number of FC-1 Units[6]	OSA per FC-1 (cfm)[7]	FC-2 Unit Type[5]	Number of FC-2 Units[6]	OSA per FC-2 (cfm)[7]	Design PV (kW DC)
A	CZ01 Arcata; **CZ16 Blue Canyon**	R-15ci	R-15ci	R-5ci	0.42	0.25	Y	N	N	W42HC	3	364.8	W42HC	1	547.2	0.0
B	CZ02 Santa Rosa; CZ03 Oakland; CZ04 San Jose-Reid; **CZ05 Santa Maria**	R-5 ci	na	R-5ci	0.42	0.25	Y	N	N	W42HC	3	364.8	W42HC	1	547.2	0.0 / 0.0 / 0.0 / 0.0 / 0.0
C	CZ06 Torrance; CZ07 San Diego-Lindbergh; CZ08 Fullerton; CZ09 Burbank-Glendale; CZ10 Riverside; CZ11 Red Bluff; CZ12 Sacramento; **CZ13 Fresno**	R-5 ci	na	R-5ci	0.42	0.25	Y	N	Y	SysAir 4T	3	364.8	SysAir 4T	1	547.2	0.0
D	CZ14 Palmdale; **CZ15 Palm Spring-Intl**	R-5 ci	na	R-5ci	0.42	0.25	Y	N	Y	SysAir 4T	3	364.8	SysAir 4T	1	547.2	1.5 / 2.2

AMS 120x40

CZ Group	Climate Zone / Reference City	Roof Rigid R-value[1]	Ground Floor R-value[3]	Metal Stud Wall R-value[2]	Window U-factor[4]	Window SHGC[4]	Air Barrier (Y/N)	Cool Roof (Y/N)	CO Sensor (Y/N)	FC-1 Unit Type[5]	Number of FC-1 Units[6]	OSA per FC-1 (cfm)[7]	FC-2 Unit Type[5]	Number of FC-2 Units[6]	OSA per FC-2 (cfm)[7]	Design PV (kW DC)
A	CZ01 Arcata; **CZ16 Blue Canyon**	R-15 ci	R-5ci	R-5 ci	0.42	0.25	Y	N	N	W42HC	5	364.8	na	0	na	0.0
B	CZ02 Santa Rosa; CZ03 Oakland; CZ04 San Jose-Reid; **CZ05 Santa Maria**	R-5ci	na	R-5 ci	0.42	0.25	Y	N	N	W42HC	5	364.8	na	0	na	0.0
C	CZ06 Torrance; CZ07 San Diego-Lindbergh; CZ08 Fullerton; CZ09 Burbank-Glendale; CZ10 Riverside; CZ11 Red Bluff; CZ12 Sacramento; **CZ13 Fresno**	R-5ci	na	R-5 ci	0.42	0.25	Y	N	N	W42HC	5	364.8	na	0	na	0.0
D	CZ14 Palmdale; **CZ15 Palm Spring-Intl**	R-5ci	na	R-5 ci	0.42	0.25	Y	N	N	W42HC	5	364.8	na	0	na	4.6 / 7.0

PC DESIGN REVIEW INFORMATION
Title 24-2022, Part6, Energy Code

Model Name and Option: AMS 24x40 — Calculation Date/Time of Energy Report: 9/3/2023
Total Floor Area: 960 — DSA Application:
HVAC System Type: VSHP

CZ Group	Climate Zone / Azimuth (Front Orientation)	Metric	Standard Design	Proposed Design	Margin	Worst Case
A	**Climate Zone 16 Blue Canyon**					
	30°	TDV-E	289.3	248.3	40.9	
		TDV-T	289.3	248.3	40.9	
		SOURCE	39.0	23.7	15.3	
	75°	TDV-E	295.8	249.3	46.6	
		TDV-T	295.8	249.3	46.6	
		SOURCE	39.2	23.8	15.4	
	120°	TDV-E	291.8	249.2	42.6	
		TDV-T	291.8	249.2	42.6	
		SOURCE	39.0	23.8	15.2	
	165°	TDV-E	275.6	247.9	27.7	Worst Case
		TDV-T	275.6	247.9	27.7	Worst Case
		SOURCE	38.3	23.7	14.7	Worst Case
	210°	TDV-E	292.8	248.9	43.9	
		TDV-T	292.8	248.9	43.9	
		SOURCE	39.2	23.8	15.4	
	255°	TDV-E	302.1	249.0	53.0	
		TDV-T	302.1	249.0	53.0	
		SOURCE	39.4	23.8	15.7	
	300°	TDV-E	291.2	248.3	42.9	
		TDV-T	291.2	248.3	42.9	
		SOURCE	38.9	23.7	15.2	
	345°	TDV-E	279.9	246.9	32.9	
		TDV-T	279.9	246.9	32.9	
		SOURCE	38.3	23.6	14.8	
B	**Climate Zone 05 Santa Maria**					
	30°	TDV-E	201.7	128.7	73.0	
		TDV-T	201.7	128.7	73.0	
		SOURCE	19.0	13.1	5.9	
	75°	TDV-E	202.2	128.4	73.8	
		TDV-T	202.2	128.4	73.8	
		SOURCE	19.1	13.1	5.9	
	120°	TDV-E	222.5	128.0	94.5	
		TDV-T	222.5	128.0	94.5	
		SOURCE	20.8	13.1	7.7	
	165°	TDV-E	220.0	127.8	92.2	
		TDV-T	220.0	127.8	92.2	
		SOURCE	20.6	13.1	7.5	
	210°	TDV-E	197.3	128.6	68.7	
		TDV-T	197.3	128.6	68.7	
		SOURCE	18.6	13.2	5.5	
	255°	TDV-E	197.0	127.6	69.4	
		TDV-T	197.0	127.6	69.4	
		SOURCE	18.6	13.1	5.5	
	300°	TDV-E	218.4	127.2	91.3	
		TDV-T	218.4	127.2	91.3	
		SOURCE	20.4	13.0	7.4	
	345°	TDV-E	193.7	127.5	66.3	Worst Case
		TDV-T	193.7	127.5	66.3	Worst Case
		SOURCE	18.3	13.1	5.3	Worst Case
C	**Climate Zone 13 Fresno**					
	30°	TDV-E	315.5	235.7	79.8	
		TDV-T	315.5	235.7	79.8	
		SOURCE	25.0	17.9	7.1	
	75°	TDV-E	325.9	238.3	87.6	
		TDV-T	325.9	238.3	87.6	
		SOURCE	25.8	18.0	7.8	
	120°	TDV-E	321.2	237.8	83.5	
		TDV-T	321.2	237.8	83.5	
		SOURCE	25.5	18.0	7.5	
	165°	TDV-E	298.7	233.8	64.9	Worst Case
		TDV-T	298.7	233.8	64.9	Worst Case
		SOURCE	23.7	17.8	5.9	Worst Case
	210°	TDV-E	311.0	235.6	75.5	
		TDV-T	311.0	235.6	75.5	
		SOURCE	24.7	17.9	6.8	
	255°	TDV-E	318.8	237.5	81.3	
		TDV-T	318.8	237.5	81.3	
		SOURCE	25.2	17.9	7.2	
	300°	TDV-E	315.2	236.6	78.6	
		TDV-T	315.2	236.6	78.6	
		SOURCE	24.9	17.9	7.0	
	345°	TDV-E	301.0	233.4	67.5	
		TDV-T	301.0	233.4	67.5	
		SOURCE	23.8	17.7	6.1	
D	**Climate Zone 15 Palm Spring-Intl**					
	30°	TDV-E	345.7	270.2	75.5	
		TDV-T	345.7	270.2	75.5	
		SOURCE	24.8	17.0	7.8	
	75°	TDV-E	359.0	271.7	87.3	
		TDV-T	359.0	271.7	87.3	
		SOURCE	25.8	17.1	8.7	
	120°	TDV-E	356.4	270.5	85.9	
		TDV-T	356.4	270.5	85.9	
		SOURCE	25.6	17.1	8.6	
	165°	TDV-E	331.4	267.5	63.9	
		TDV-T	331.4	267.5	63.9	
		SOURCE	23.6	16.8	6.8	
	210°	TDV-E	342.0	269.7	72.2	
		TDV-T	342.0	269.7	72.2	
		SOURCE	24.7	17.0	7.7	
	255°	TDV-E	352.7	271.2	81.4	
		TDV-T	352.7	271.2	81.4	
		SOURCE	25.4	17.1	8.4	
	300°	TDV-E	345.4	270.4	75.0	
		TDV-T	345.4	270.4	75.0	
		SOURCE	24.8	17.0	7.8	
	345°	TDV-E	329.3	268.0	61.4	Worst Case
		TDV-T	329.3	268.0	61.4	Worst Case
		SOURCE	23.4	16.8	6.6	Worst Case

PC DESIGN REVIEW INFORMATION
Title 24-2022, Part 6, Energy Code

Model Name and Option: AMS 36x40 — Calculation Date/Time of Energy Report: 9/3/2023
Total Floor Area: 1440 — DSA Application:
HVAC System Type: VSHP

CZ Group	Climate Zone / Azimuth (Front Orientation)	Metric	Standard Design	Proposed Design	Margin	Worst Case
A	**Climate Zone 16 Blue Canyon**					
	30°	TDV-E	279.4	230.9	48.5	
		TDV-T	279.4	230.9	48.5	
		SOURCE	36.4	21.5	14.9	
	75°	TDV-E	291.1	231.3	59.9	
		TDV-T	291.1	231.3	59.9	
		SOURCE	36.7	21.5	15.2	
	120°	TDV-E	278.0	230.1	47.8	
		TDV-T	278.0	230.1	47.8	
		SOURCE	35.9	21.4	14.5	
	165°	TDV-E	269.3	227.8	41.4	
		TDV-T	269.3	227.8	41.4	
		SOURCE	35.5	21.2	14.3	
	210°	TDV-E	278.3	229.1	49.2	
		TDV-T	278.3	229.1	49.2	
		SOURCE	36.1	21.3	14.8	
	255°	TDV-E	279.5	231.0	48.5	
		TDV-T	279.5	231.0	48.5	
		SOURCE	36.0	21.5	14.6	
	300°	TDV-E	275.1	231.6	43.5	
		TDV-T	275.1	231.6	43.5	
		SOURCE	35.9	21.6	14.3	
	345°	TDV-E	261.8	230.0	31.7	Worst Case
		TDV-T	261.8	230.0	31.7	Worst Case
		SOURCE	35.5	21.4	14.1	Worst Case
B	**Climate Zone 05 Santa Maria**					
	30°	TDV-E	189.1	111.0	78.1	
		TDV-T	189.1	111.0	78.1	
		SOURCE	17.8	11.4	6.3	
	75°	TDV-E	189.2	110.0	79.1	
		TDV-T	189.2	110.0	79.1	
		SOURCE	17.8	11.3	6.4	
	120°	TDV-E	181.1	109.6	71.5	Worst Case
		TDV-T	181.1	109.6	71.5	Worst Case
		SOURCE	17.0	11.3	5.8	Worst Case
	165°	TDV-E	188.8	109.6	79.2	
		TDV-T	188.8	109.6	79.2	
		SOURCE	17.8	11.3	6.5	
	210°	TDV-E	197.2	111.1	86.1	
		TDV-T	197.2	111.1	86.1	
		SOURCE	18.4	11.4	7.1	
	255°	TDV-E	192.9	110.6	82.3	
		TDV-T	192.9	110.6	82.3	
		SOURCE	18.1	11.3	6.7	
	300°	TDV-E	183.4	110.1	73.2	
		TDV-T	183.4	110.1	73.2	
		SOURCE	17.3	11.4	5.9	
	345°	TDV-E	182.8	110.1	72.7	
		TDV-T	182.8	110.1	72.7	
		SOURCE	17.3	11.4	5.9	
C	**Climate Zone 13 Fresno**					
	30°	TDV-E	208.0	171.9	36.0	
		TDV-T	208.0	171.9	36.0	
		SOURCE	15.1	12.4	2.7	
	75°	TDV-E	204.9	174.9	30.0	Worst Case
		TDV-T	204.9	174.9	30.0	Worst Case
		SOURCE	15.2	12.4	2.8	
	120°	TDV-E	212.4	174.1	38.3	
		TDV-T	212.4	174.1	38.3	
		SOURCE	15.1	12.4	2.7	
	165°	TDV-E	286.8	169.6	117.2	
		TDV-T	286.8	169.6	117.2	
		SOURCE	22.7	12.1	10.6	
	210°	TDV-E	211.9	172.9	39.0	
		TDV-T	211.9	172.9	39.0	
		SOURCE	15.3	12.4	2.9	
	255°	TDV-E	207.4	177.3	30.1	
		TDV-T	207.4	177.3	30.1	
		SOURCE	15.4	12.5	2.9	
	300°	TDV-E	214.5	176.4	38.0	
		TDV-T	214.5	176.4	38.0	
		SOURCE	15.2	12.5	2.7	
	345°	TDV-E	204.4	170.3	34.2	
		TDV-T	204.4	170.3	34.2	
		SOURCE	14.7	12.2	2.5	Worst Case
D	**Climate Zone 15 Palm Spring-Intl**					
	30°	TDV-E	326.4	203.4	123.0	
		TDV-T	326.4	203.4	123.0	
		SOURCE	23.4	12.2	11.2	
	75°	TDV-E	339.2	205.9	133.3	
		TDV-T	339.2	205.9	133.3	
		SOURCE	24.4	12.3	12.1	
	120°	TDV-E	330.4	205.1	125.4	
		TDV-T	330.4	205.1	125.4	
		SOURCE	23.6	12.2	11.4	
	165°	TDV-E	237.3	202.0	35.3	
		TDV-T	237.3	202.0	35.3	
		SOURCE	14.5	12.0	2.5	
	210°	TDV-E	252.3	204.9	47.3	
		TDV-T	252.3	204.9	47.3	
		SOURCE	15.7	12.3	3.4	
	255°	TDV-E	264.4	207.8	56.6	
		TDV-T	264.4	207.8	56.6	
		SOURCE	16.4	12.4	4.0	
	300°	TDV-E	254.2	205.9	48.3	
		TDV-T	254.2	205.9	48.3	
		SOURCE	15.8	12.3	3.5	
	345°	TDV-E	235.8	201.6	34.2	Worst Case
		TDV-T	235.8	201.6	34.2	Worst Case
		SOURCE	14.3	12.0	2.4	Worst Case

PC DESIGN REVIEW INFORMATION
Title 24-2022, Part6, Energy Code

Model Name and Option: AMS 48x40 — Calculation Date/Time of Energy Report: 9/3/2023
Total Floor Area: 1920 — DSA Application:
HVAC System Type: VSHP

CZ Group	Climate Zone / Azimuth (Front Orientation)	Metric	Standard Design	Proposed Design	Margin	Worst Case
A	**Climate Zone 16 Blue Canyon**					
	30°	TDV-E	267.2	221.6	45.6	
		TDV-T	267.2	221.6	45.6	
		SOURCE	34.0	21.0	13.1	
	75°	TDV-E	277.2	223.4	53.8	
		TDV-T	277.2	223.4	53.8	
		SOURCE	34.5	21.1	13.4	
	120°	TDV-E	268.7	223.4	45.3	
		TDV-T	268.7	223.4	45.3	
		SOURCE	34.1	21.2	13.0	
	165°	TDV-E	254.1	221.1	33.0	Worst Case
		TDV-T	254.1	221.1	33.0	Worst Case
		SOURCE	33.5	21.0	12.5	Worst Case
	210°	TDV-E	271.8	222.1	49.6	
		TDV-T	271.8	222.1	49.6	
		SOURCE	34.3	21.0	13.3	
	255°	TDV-E	283.5	223.4	60.1	
		TDV-T	283.5	223.4	60.1	
		SOURCE	34.7	21.1	13.6	
	300°	TDV-E	271.8	222.8	49.0	
		TDV-T	271.8	222.8	49.0	
		SOURCE	34.1	21.1	13.0	
	345°	TDV-E	258.1	220.2	37.9	
		TDV-T	258.1	220.2	37.9	
		SOURCE	33.4	20.9	12.6	
B	**Climate Zone 05 Santa Maria**					
	30°	TDV-E	190.3	120.3	70.0	
		TDV-T	190.3	120.3	70.0	
		SOURCE	17.6	12.1	5.5	
	75°	TDV-E	190.3	120.2	70.2	
		TDV-T	190.3	120.2	70.2	
		SOURCE	17.6	12.1	5.5	
	120°	TDV-E	211.2	119.4	91.7	
		TDV-T	211.2	119.4	91.7	
		SOURCE	19.4	12.1	7.3	
	165°	TDV-E	208.0	118.9	89.1	
		TDV-T	208.0	118.9	89.1	
		SOURCE	19.2	12.0	7.1	
	210°	TDV-E	185.6	120.0	65.6	Worst Case
		TDV-T	185.6	120.0	65.6	Worst Case
		SOURCE	17.2	12.1	5.1	Worst Case
	255°	TDV-E	215.6	119.4	96.2	
		TDV-T	215.6	119.4	96.2	
		SOURCE	19.7	12.0	7.7	
	300°	TDV-E	206.5	119.0	87.5	
		TDV-T	206.5	119.0	87.5	
		SOURCE	19.0	12.0	7.0	
	345°	TDV-E	211.8	118.8	93.0	
		TDV-T	211.8	118.8	93.0	
		SOURCE	19.4	12.0	7.4	
C	**Climate Zone 13 Fresno**					
	30°	TDV-E	296.6	221.7	74.9	
		TDV-T	296.6	221.7	74.9	
		SOURCE	23.2	16.7	6.5	
	75°	TDV-E	307.3	225.9	81.4	
		TDV-T	307.3	225.9	81.4	
		SOURCE	24.0	16.9	7.1	
	120°	TDV-E	301.6	224.8	76.8	
		TDV-T	301.6	224.8	76.8	
		SOURCE	23.6	16.9	6.7	
	165°	TDV-E	280.3	219.2	61.2	
		TDV-T	280.3	219.2	61.2	
		SOURCE	21.9	16.6	5.4	Worst Case
	210°	TDV-E	291.7	221.2	70.5	
		TDV-T	291.7	221.2	70.5	
		SOURCE	22.9	16.8	6.2	
	255°	TDV-E	300.3	224.7	75.6	
		TDV-T	300.3	224.7	75.6	
		SOURCE	23.4	16.9	6.6	
	300°	TDV-E	296.3	224.1	72.2	
		TDV-T	296.3	224.1	72.2	
		SOURCE	23.1	16.8	6.3	
	345°	TDV-E	280.0	219.0	61.0	Worst Case
		TDV-T	280.0	219.0	61.0	Worst Case
		SOURCE	22.0	16.5	5.4	
D	**Climate Zone 15 Palm Spring-Intl**					
	30°	TDV-E	319.2	257.1	62.2	
		TDV-T	231.5	218.6	12.9	
		SOURCE	19.2	14.7	4.5	
	75°	TDV-E	337.7	260.0	77.6	
		TDV-T	249.9	222.3	27.6	
		SOURCE	20.5	14.9	5.6	
	120°	TDV-E	332.9	258.4	74.5	
		TDV-T	245.2	221.8	23.4	
		SOURCE	20.1	14.9	5.3	
	165°	TDV-E	305.9	253.6	52.3	Worst Case
		TDV-T	218.1	215.0	3.1	Worst Case
		SOURCE	18.0	14.4	3.6	Worst Case
	210°	TDV-E	321.9	256.3	65.6	
		TDV-T	234.1	217.8	16.4	
		SOURCE	19.5	14.7	4.8	
	255°	TDV-E	335.5	259.4	76.2	
		TDV-T	247.8	221.6	26.1	
		SOURCE	20.5	14.9	5.6	
	300°	TDV-E	327.1	258.7	68.4	
		TDV-T	239.3	220.8	18.6	
		SOURCE	19.7	14.7	5.0	
	345°	TDV-E	309.0	254.6	54.5	
		TDV-T	221.3	216.0	5.3	
		SOURCE	18.2	14.4	3.8	

PC DESIGN REVIEW INFORMATION
Title 24-2022, Part6, Energy Code

Model Name and Option: PC 60x40 — Calculation Date/Time of Energy Report: 9/3/2023
Total Floor Area: 2400 — DSA Application:
HVAC System Type: VSHP

CZ Group	Climate Zone / Azimuth (Front Orientation)	Metric	Standard Design	Proposed Design	Margin	Worst Case
A	**Climate Zone 16 Blue Canyon**					
	30°	TDV-E	263.0	221.7	41.3	
		TDV-T	263.0	221.7	41.3	
		SOURCE	33.4	20.5	12.9	
	75°	TDV-E	275.0	224.0	51.0	
		TDV-T	275.0	224.0	51.0	
		SOURCE	33.8	20.7	13.1	
	120°	TDV-E	262.7	223.3	39.4	
		TDV-T	262.7	223.3	39.4	
		SOURCE	33.2	20.6	12.5	
	165°	TDV-E	254.0	219.8	34.1	
		TDV-T	254.0	219.8	34.1	
		SOURCE	32.7	20.3	12.4	
	210°	TDV-E	262.1	221.0	41.2	
		TDV-T	262.1	221.0	41.2	
		SOURCE	33.2	20.4	12.9	
	255°	TDV-E	270.8	223.8	47.0	
		TDV-T	270.8	223.8	47.0	
		SOURCE	33.6	20.6	13.0	
	300°	TDV-E	263.9	223.8	40.1	
		TDV-T	263.9	223.8	40.1	
		SOURCE	33.3	20.7	12.6	
	345°	TDV-E	251.6	220.7	30.9	Worst Case
		TDV-T	251.6	220.7	30.9	Worst Case
		SOURCE	32.7	20.4	12.3	Worst Case
B	**Climate Zone 05 Santa Maria**					
	30°	TDV-E	185.2	120.4	64.8	
		TDV-T	185.2	120.4	64.8	
		SOURCE	17.2	11.7	5.5	
	75°	TDV-E	185.3	120.6	64.7	
		TDV-T	185.3	120.6	64.7	
		SOURCE	17.2	11.8	5.5	
	120°	TDV-E	177.1	120.0	57.2	Worst Case
		TDV-T	177.1	120.0	57.2	Worst Case
		SOURCE	16.5	11.7	4.8	Worst Case
	165°	TDV-E	180.8	119.1	61.7	
		TDV-T	180.8	119.1	61.7	
		SOURCE	16.9	11.6	5.2	
	210°	TDV-E	188.2	120.4	67.8	
		TDV-T	188.2	120.4	67.8	
		SOURCE	17.4	11.7	5.7	
	255°	TDV-E	187.9	120.8	67.1	
		TDV-T	187.9	120.8	67.1	
		SOURCE	17.4	11.7	5.7	
	300°	TDV-E	178.7	120.1	58.6	
		TDV-T	178.7	120.1	58.6	
		SOURCE	16.7	11.7	4.9	
	345°	TDV-E	178.4	119.1	59.2	
		TDV-T	178.4	119.1	59.2	
		SOURCE	16.7	11.7	5.0	
C	**Climate Zone 13 Fresno**					
	30°	TDV-E	289.6	216.0	73.6	
		TDV-T	289.6	216.0	73.6	
		SOURCE	22.8	16.0	6.8	
	75°	TDV-E	299.1	221.0	78.1	
		TDV-T	299.1	221.0	78.1	
		SOURCE	23.4	16.2	7.2	
	120°	TDV-E	294.2	220.1	74.1	
		TDV-T	294.2	220.1	74.1	
		SOURCE	23.1	16.2	6.9	
	165°	TDV-E	274.9	213.8	61.1	Worst Case
		TDV-T	274.9	213.8	61.1	Worst Case
		SOURCE	21.7	15.8	5.9	Worst Case
	210°	TDV-E	290.9	216.2	74.6	
		TDV-T	290.9	216.2	74.6	
		SOURCE	22.9	16.0	6.9	
	255°	TDV-E	301.8	221.7	80.1	
		TDV-T	301.8	221.7	80.1	
		SOURCE	23.6	16.2	7.4	
	300°	TDV-E	296.0	220.7	75.3	
		TDV-T	296.0	220.7	75.3	
		SOURCE	23.2	16.2	7.0	
	345°	TDV-E	277.3	213.9	63.4	
		TDV-T	277.3	213.9	63.4	
		SOURCE	21.8	15.8	6.0	
D	**Climate Zone 15 Palm Spring-Intl**					
	30°	TDV-E	311.4	284.4	27.1	
		TDV-T	223.7	211.6	12.1	
		SOURCE	18.7	15.8	2.9	
	75°	TDV-E	324.6	288.3	36.3	
		TDV-T	236.9	217.0	19.8	
		SOURCE	19.7	16.2	3.5	
	120°	TDV-E	324.3	287.2	37.2	
		TDV-T	236.6	217.9	18.7	
		SOURCE	19.5	16.2	3.3	
	165°	TDV-E	303.0	282.1	21.0	
		TDV-T	215.3	209.1	6.2	
		SOURCE	17.9	15.5	2.4	
	210°	TDV-E	316.2	285.0	31.2	
		TDV-T	228.4	212.1	16.3	
		SOURCE	19.0	15.9	3.1	
	255°	TDV-E	331.7	289.0	42.7	
		TDV-T	244.0	217.7	26.3	
		SOURCE	20.1	16.2	3.9	
	300°	TDV-E	326.6	287.2	39.4	
		TDV-T	238.8	215.5	23.3	
		SOURCE	19.7	16.0	3.7	
	345°	TDV-E	302.0	281.8	20.1	Worst Case
		TDV-T	214.2	208.8	5.4	Worst Case
		SOURCE	17.8	15.5	2.3	Worst Case

HVAC Specification Table

Bard W18H-W60H Series Wall-Mount	Capacity (Ton)	Cooling (Btu/h)	Heating (Btu/h)	Supply Fan CV/VFD	Supply Fan (CFM)	Supply Fan (HP)	Cooling Efficiency (EER)	Heating Efficiency (COP)
W42HC	3.5	42,000	39,000	CV	1,350	0.50	11.0	3.3
W48HC	4.0	47,500	42,500	CV	1,550	0.75	11	3.3
W60HC	4.5	54,500	52,500	CV	1,750	0.75	11.0	3.3
Systemair Sophomore								
SysAir 3T	3.0	35,600	32,400	VFD	1,100	0.50	11.1	3.41
SysAir 4T	4.0	47,500	44,800	VFD	1,600	0.50	11.0	3.54
SysAir 5T	5.0	57,100	56,200	VFD	1,800	0.75	11.0	3.39

Notes

(green)	Indicates deviation from predominant design
(blue)	Indicates Systemair Sophomore HVAC unit
1	Rigid insulation R-value added above the R-19 Roof Structure per detail A & B /A7.3
2	Rigid insulation R-value added to the exterior R-13 Metal Stud walls, per detail A & B /A7.3
3	Rigid insulation R-value below the ground floor slab
4	NFRC Tested Window U-factor and SHGC
5	HVAC Unit Specification
6	Total number of specified HVAC units in PC
7	Design Ouside Air (OSA / cfm) per HVAC unit per Section H3. or the Title 24 reports

PV System[8]
- The kW DC OPV required for compliance is indicated in this table.
- PV panel Azimuth is based on the PC orientation, see Section F1 on pg. 9 of the Title 24 report for details
- PV panel = 5 degree per Section F1 of the Title 24 report for details

IDENTIFICATION STAMP
DIV. OF THE STATE ARCHITECT
APP: 03-124589 INC:
REVIEWED FOR
SS ☑ FLS ☑ ACS ☑
DATE: 04/15/2025

AMS®
American Modular Systems
787 Spreckels Ave., Manteca, CA 95336
Phone (209) 825-1921 Fax (209) 825-7018
www.americanmodular.com

INTELLECTUAL-PROPERTY & PROPRIETARY RIGHTS STATEMENT
COPYRIGHT © AMERICAN MODULAR SYSTEMS (AMS)
AMS OWNS ALL COPYRIGHT AND OTHER INTELLECTUAL-PROPERTY AND PROPRIETARY RIGHTS IN THESE DRAWINGS, SPECIFICATIONS, AND THE MATERIAL CONTAINED HEREIN. CERTAIN ELEMENTS SHOWN IN THESE DOCUMENTS ARE REGISTERED TRADEMARKS OF AMS. ALL PATENTABLE MATERIALS CONTAINED IN THESE DOCUMENTS AND ORIGINATING WITH AMS WILL REMAIN THE SOLE PROPERTY OF AMS. THESE DRAWING, SPECIFICATIONS, AND THE MATERIAL CONTAINED HEREIN MAY NOT BE REPRODUCED, TRANSMITTED, COPIED, DISTRIBUTED, MODIFIED, OR OTHERWISE DISPOSED OF (DIRECTLY OR INDIRECTLY) AND MAY NOT BE USED (IN WHOLE OR IN PART) TO ASSIST IN THE CONSTRUCTION, DESIGN, OR OTHER MAKING OF, OR FOR THE PURPOSE OF FURNISHING ANY INFORMATION FOR THE CONSTRUCTION, DESIGN, OR OTHER MAKING OF, ANY BUILDINGS (MODULAR OR OTHERWISE), DRAWINGS, SPECIFICATIONS, PRINTS, APPARATUS, OR PARTS THEREOF, EXCEPT AS EXPRESSLY PERMITTED BY WRITTEN CONSENT OF, OR IN A WRITTEN AGREEMENT WITH, AMS. SUBMITTAL OR DISTRIBUTION TO MEET OFFICIAL REGULATORY REQUIREMENTS WILL NOT BE CONSTRUED AS PUBLICATION IN DEROGATION OF AMS'S COPYRIGHT OR OTHER INTELLECTUAL-PROPERTY OR PROPRIETARY RIGHTS.

PRE-CHECKED SET NAME
24' x 40' THRU 120' x 40'
STANDARD MODULAR BUILDING
(HIGH SEISMIC)
FORM®

SITE SPECIFIC PROJECT NAME
VENTURA COLLEGE
(1) 72'x40' BUILDING

APPROVED
DIV. OF THE STATE ARCHITECT
APP: 04-122051 PC
REVIEWED FOR
SS ☑ FLS ☑ ACS ☑ CG ☑
DATE: 04/03/2024

☒ 2022 CBC PRE-CHECK (PC) DOCUMENT
A SEPARATE PROJECT APPLICATION FOR CONSTRUCTION IS REQUIRED.

MANUFACTURER PROFESSIONAL OF RECORD ON PC
LICENSED ARCHITECT
RANDALL PATRICK CAVANAGH
No. C12631
Ren. 3-31-25
STATE OF CALIFORNIA

THESE DRAWINGS ARE PRELIMINARY AND NOT FOR CONSTRUCTION
UNLESS STAMPED & SIGNED BY THE DESIGN PROFESSIONAL OF RECORD.

REVISIONS
1
2
3
4

DRAWN BY:	AA
SCALE:	AS NOTED
DATE:	MM/DD/YY
PROJECT NO:	XXXX-22

SHEET TITLE:
ENERGY CALCULATIONS SUMMATION SHEET

SHEET NUMBER:
EN.1A

PC DESIGN REVIEW INFORMATION
Title 24-2022, Part6, Energy Code

Model Name and Option: PC 72x40 — Calculation Date/Time of Energy Report: 9/3/2023
Total Floor Area: 2880 — DSA Application:
HVAC System Type: VSHP

CZ Group	Climate Zone 16 Blue Canyon	Metric	Standard Design	Proposed Design	Margin	Worst Case
A	30°	TDV-E	258.8	217.8	41.0	
		TDV-T	258.8	217.8	41.0	
		SOURCE	32.4	19.8	12.6	
	75°	TDV-E	265.8	220.8	45.1	
		TDV-T	265.8	220.8	45.1	
		SOURCE	32.7	20.0	12.7	
	120°	TDV-E	260.7	220.7	40.0	
		TDV-T	260.7	220.7	40.0	
		SOURCE	32.5	20.1	12.4	
	165°	TDV-E	246.6	217.4	29.1	Worst Case
		TDV-T	246.6	217.4	29.1	Worst Case
		SOURCE	31.8	19.8	12.0	Worst Case
	210°	TDV-E	259.6	218.3	41.3	
		TDV-T	259.6	218.3	41.3	
		SOURCE	32.5	19.8	12.7	
	255°	TDV-E	272.1	220.6	51.4	
		TDV-T	272.1	220.6	51.4	
		SOURCE	33.0	20.0	12.9	
	300°	TDV-E	259.5	220.1	39.4	
		TDV-T	259.5	220.1	39.4	
		SOURCE	32.3	20.0	12.3	
	345°	TDV-E	250.1	216.7	33.4	
		TDV-T	250.1	216.7	33.4	
		SOURCE	31.8	19.7	12.1	
CZ Group	Climate Zone 05 Santa Maria	Azimuth (Front Orientation)	Standard Design	Proposed Design	Margin	Worst Case
B	30°	TDV-E	186.7	114.9	71.8	
		TDV-T	186.7	114.9	71.8	
		SOURCE	17.2	11.2	6.1	
	75°	TDV-E	186.7	115.3	71.4	
		TDV-T	186.7	115.3	71.4	
		SOURCE	17.3	11.2	6.0	
	120°	TDV-E	177.8	114.3	63.5	
		TDV-T	177.8	114.3	63.5	
		SOURCE	16.5	11.2	5.3	
	165°	TDV-E	175.6	113.3	62.3	
		TDV-T	175.6	113.3	62.3	
		SOURCE	16.3	11.1	5.2	
	210°	TDV-E	182.1	114.3	67.8	
		TDV-T	182.1	114.3	67.8	
		SOURCE	16.9	11.2	5.7	
	255°	TDV-E	182.1	114.6	67.5	
		TDV-T	182.1	114.6	67.5	
		SOURCE	16.8	11.2	5.7	
	300°	TDV-E	173.6	113.9	59.6	Worst Case
		TDV-T	173.6	113.9	59.6	Worst Case
		SOURCE	16.1	11.1	5.0	Worst Case
	345°	TDV-E	178.8	113.3	65.6	
		TDV-T	178.8	113.3	65.6	
		SOURCE	16.6	11.1	5.5	
CZ Group	Climate Zone 13 Fresno	Azimuth (Front Orientation)	Standard Design	Proposed Design	Margin	Worst Case
C	30°	TDV-E	201.4	172.2	29.2	
		TDV-T	150.2	138.1	12.0	
		SOURCE	12.6	10.8	1.8	
	75°	TDV-E	207.8	178.9	29.0	
		TDV-T	156.6	145.1	11.5	
		SOURCE	12.9	11.1	1.8	
	120°	TDV-E	207.4	177.4	30.0	
		TDV-T	156.1	144.5	11.7	
		SOURCE	12.7	11.1	1.7	
	165°	TDV-E	272.2	169.3	102.9	
		TDV-T	220.9	135.5	85.4	
		SOURCE	19.5	10.6	9.0	
	210°	TDV-E	198.9	171.4	27.5	
		TDV-T	147.7	137.3	10.4	
		SOURCE	12.5	10.8	1.7	
	255°	TDV-E	203.5	177.5	26.0	
		TDV-T	152.3	143.7	8.6	
		SOURCE	12.6	11.1	1.5	
	300°	TDV-E	198.7	176.3	22.4	Worst Case
		TDV-T	147.4	143.4	4.0	Worst Case
		SOURCE	12.2	11.0	1.3	Worst Case
	345°	TDV-E	272.2	169.2	103.0	
		TDV-T	220.9	135.5	85.4	
		SOURCE	19.6	10.5	9.0	
CZ Group	Climate Zone 15 Palm Spring-Intl	Azimuth (Front Orientation)	Standard Design	Proposed Design	Margin	Worst Case
D	30°	TDV-E	234.7	206.1	28.6	Worst Case
		TDV-T	146.9	143.0	3.9	
		SOURCE	10.9	9.9	1.0	
	75°	TDV-E	248.2	211.0	37.1	
		TDV-T	160.4	149.3	11.1	
		SOURCE	11.6	10.2	1.4	
	120°	TDV-E	239.8	209.0	30.8	
		TDV-T	152.0	149.1	2.9	Worst Case
		SOURCE	11.0	10.1	0.8	Worst Case
	165°	TDV-E	296.1	202.4	93.6	
		TDV-T	208.3	139.2	69.1	
		SOURCE	17.3	9.5	7.9	
	210°	TDV-E	308.7	204.7	103.9	
		TDV-T	220.9	141.7	79.2	
		SOURCE	18.5	9.8	8.7	
	255°	TDV-E	323.3	210.0	113.3	
		TDV-T	235.5	148.3	87.2	
		SOURCE	19.6	10.2	9.4	
	300°	TDV-E	313.5	208.9	104.6	
		TDV-T	225.7	146.8	78.9	
		SOURCE	18.7	9.9	8.8	
	345°	TDV-E	300.6	203.2	97.4	
		TDV-T	212.9	140.0	72.8	
		SOURCE	17.6	9.5	8.1	

PC DESIGN REVIEW INFORMATION
Title 24-2022, Part6, Energy Code

Model Name and Option: AMS 84x40 — Calculation Date/Time of Energy Report: 9/3/2023
Total Floor Area: 3360 — DSA Application:
HVAC System Type: VSHP

CZ Group	Climate Zone 16 Blue Canyon	Metric	Standard Design	Proposed Design	Margin	Worst Case
A	30°	TDV-E	222.2	201.8	20.4	
		TDV-T	182.6	168.7	13.9	
		SOURCE	33.8	17.4	16.4	
	75°	TDV-E	231.4	204.0	27.4	
		TDV-T	191.8	171.7	20.1	
		SOURCE	34.2	17.6	16.6	
	120°	TDV-E	223.9	203.5	20.4	
		TDV-T	184.3	172.4	11.9	
		SOURCE	33.8	17.7	16.1	
	165°	TDV-E	212.5	200.3	12.2	
		TDV-T	172.9	167.0	5.8	
		SOURCE	33.1	17.3	15.8	
	210°	TDV-E	221.6	201.4	20.2	
		TDV-T	182.0	168.3	13.7	
		SOURCE	33.8	17.4	16.4	
	255°	TDV-E	229.2	203.7	25.6	
		TDV-T	189.6	171.4	18.3	
		SOURCE	34.2	17.6	16.6	
	300°	TDV-E	223.4	203.6	19.9	
		TDV-T	183.8	171.0	12.9	
		SOURCE	33.9	17.6	16.2	
	345°	TDV-E	209.3	200.7	8.6	Worst Case
		TDV-T	169.7	167.4	2.3	Worst Case
		SOURCE	33.1	17.4	15.7	Worst Case
CZ Group	Climate Zone 05 Santa Maria	Azimuth (Front Orientation)	Standard Design	Proposed Design	Margin	Worst Case
B	30°	TDV-E	146.3	112.2	34.1	Worst Case
		TDV-T	106.5	105.2	1.3	Worst Case
		SOURCE	11.6	10.9	0.7	Worst Case
	75°	TDV-E	146.6	112.0	34.6	
		TDV-T	106.8	105.2	1.6	
		SOURCE	11.6	10.9	0.7	
	120°	TDV-E	187.7	111.3	76.3	
		TDV-T	147.9	104.7	43.1	
		SOURCE	15.5	10.9	4.6	
	165°	TDV-E	189.7	110.8	78.9	
		TDV-T	149.9	103.9	46.0	
		SOURCE	15.7	10.8	4.8	
	210°	TDV-E	149.7	112.1	37.6	
		TDV-T	109.9	105.2	4.7	
		SOURCE	11.9	10.9	1.0	
	255°	TDV-E	197.2	111.8	85.4	
		TDV-T	157.4	105.0	52.4	
		SOURCE	16.3	10.9	5.4	
	300°	TDV-E	188.1	111.2	76.9	
		TDV-T	148.3	104.5	43.9	
		SOURCE	15.5	10.9	4.7	
	345°	TDV-E	188.5	110.8	77.7	
		TDV-T	148.7	103.9	44.8	
		SOURCE	15.6	10.8	4.7	
CZ Group	Climate Zone 13 Fresno	Azimuth (Front Orientation)	Standard Design	Proposed Design	Margin	Worst Case
C	30°	TDV-E	238.2	169.5	68.8	
		TDV-T	187.0	169.5	17.5	
		SOURCE	15.9	11.9	4.1	Worst Case
	75°	TDV-E	244.3	174.9	69.3	
		TDV-T	193.0	174.9	18.1	
		SOURCE	16.4	12.1	4.3	
	120°	TDV-E	259.1	173.9	85.2	
		TDV-T	207.8	173.9	33.9	
		SOURCE	17.3	12.1	5.3	
	165°	TDV-E	244.3	167.2	77.1	
		TDV-T	193.0	167.2	25.8	
		SOURCE	16.4	11.7	4.7	
	210°	TDV-E	234.6	169.8	64.9	
		TDV-T	183.3	169.8	13.6	
		SOURCE	16.0	11.9	4.1	
	255°	TDV-E	239.9	175.5	64.4	Worst Case
		TDV-T	188.6	175.5	13.1	Worst Case
		SOURCE	16.4	12.2	4.2	
	300°	TDV-E	242.0	174.3	67.8	
		TDV-T	190.8	174.3	16.5	
		SOURCE	16.2	12.1	4.1	
	345°	TDV-E	243.9	167.2	76.7	
		TDV-T	192.6	167.2	25.4	
		SOURCE	16.5	11.7	4.8	
CZ Group	Climate Zone 15 Palm Spring-Intl	Azimuth (Front Orientation)	Standard Design	Proposed Design	Margin	Worst Case
D	30°	TDV-E	289.0	206.2	82.7	
		TDV-T	201.2	174.2	27.0	
		SOURCE	15.6	11.1	4.5	
	75°	TDV-E	300.1	211.1	89.0	
		TDV-T	212.3	179.7	32.6	
		SOURCE	16.3	11.4	4.9	
	120°	TDV-E	296.0	209.4	86.6	
		TDV-T	208.2	179.0	29.2	
		SOURCE	15.8	11.3	4.6	
	165°	TDV-E	274.8	203.4	71.4	
		TDV-T	187.0	171.3	15.7	
		SOURCE	14.4	10.8	3.5	
	210°	TDV-E	287.6	206.5	81.0	
		TDV-T	199.8	174.5	25.3	
		SOURCE	15.6	11.2	4.4	
	255°	TDV-E	276.0	211.3	64.7	
		TDV-T	188.2	180.0	8.3	
		SOURCE	15.3	11.4	3.9	
	300°	TDV-E	284.3	210.0	74.3	
		TDV-T	196.6	178.5	18.1	
		SOURCE	15.2	11.2	4.0	
	345°	TDV-E	260.9	203.6	57.3	Worst Case
		TDV-T	173.2	171.6	1.6	Worst Case
		SOURCE	13.5	10.8	2.7	Worst Case

PC DESIGN REVIEW INFORMATION
Title 24-2022, Part6, Energy Code

Model Name and Option: AMS 96x40 — Calculation Date/Time of Energy Report: 9/3/2023
Total Floor Area: 3840 — DSA Application:
HVAC System Type: VSHP

CZ Group	Climate Zone 16 Blue Canyon	Metric	Standard Design	Proposed Design	Margin	Worst Case
A	30°	TDV-E	255.6	208.5	47.1	
		TDV-T	216.0	207.0	9.0	
		SOURCE	30.0	19.6	10.4	
	75°	TDV-E	267.3	211.0	56.3	
		TDV-T	227.7	209.5	18.2	
		SOURCE	30.6	19.8	10.8	
	120°	TDV-E	257.2	211.0	46.3	
		TDV-T	217.6	209.6	8.1	
		SOURCE	30.1	19.8	10.3	
	165°	TDV-E	284.6	208.1	76.5	
		TDV-T	245.0	206.6	38.4	
		SOURCE	40.3	19.6	20.7	
	210°	TDV-E	260.9	209.1	51.8	
		TDV-T	221.3	207.6	13.7	
		SOURCE	30.3	19.6	10.7	
	255°	TDV-E	273.7	211.0	62.7	
		TDV-T	234.1	209.5	24.6	
		SOURCE	30.8	19.8	11.1	
	300°	TDV-E	261.3	210.3	50.9	
		TDV-T	221.7	208.9	12.8	
		SOURCE	30.2	19.8	10.4	
	345°	TDV-E	246.8	207.3	39.5	Worst Case
		TDV-T	207.2	205.8	1.4	Worst Case
		SOURCE	29.4	19.5	9.9	Worst Case
CZ Group	Climate Zone 05 Santa Maria	Azimuth (Front Orientation)	Standard Design	Proposed Design	Margin	Worst Case
B	30°	TDV-E	184.3	116.3	68.0	
		TDV-T	144.5	116.3	28.2	
		SOURCE	15.1	11.5	3.6	
	75°	TDV-E	184.3	116.3	68.0	
		TDV-T	144.5	116.3	28.2	
		SOURCE	15.2	11.5	3.6	
	120°	TDV-E	205.2	115.5	89.6	
		TDV-T	165.4	115.5	49.8	
		SOURCE	17.0	11.5	5.5	
	165°	TDV-E	201.6	114.6	87.0	
		TDV-T	161.8	114.6	47.2	
		SOURCE	16.7	11.5	5.2	
	210°	TDV-E	179.5	115.8	63.7	Worst Case
		TDV-T	139.7	115.8	23.9	Worst Case
		SOURCE	14.8	11.5	3.2	Worst Case
	255°	TDV-E	209.5	115.8	93.8	
		TDV-T	169.7	115.8	54.0	
		SOURCE	17.3	11.5	5.8	
	300°	TDV-E	200.8	115.0	85.8	
		TDV-T	161.0	115.0	46.1	
		SOURCE	16.6	11.5	5.2	
	345°	TDV-E	205.6	114.5	91.1	
		TDV-T	165.8	114.5	51.3	
		SOURCE	17.0	11.4	5.6	
CZ Group	Climate Zone 13 Fresno	Azimuth (Front Orientation)	Standard Design	Proposed Design	Margin	Worst Case
C	30°	TDV-E	286.6	214.7	71.9	
		TDV-T	235.3	214.7	20.6	
		SOURCE	20.5	16.1	4.3	
	75°	TDV-E	298.0	219.9	78.1	
		TDV-T	246.7	219.9	26.8	
		SOURCE	21.2	16.4	4.9	
	120°	TDV-E	291.6	218.5	73.1	
		TDV-T	240.3	218.5	21.8	
		SOURCE	20.8	16.4	4.5	
	165°	TDV-E	270.2	212.0	58.2	Worst Case
		TDV-T	218.9	212.0	7.0	Worst Case
		SOURCE	19.2	16.0	3.2	Worst Case
	210°	TDV-E	281.8	214.2	67.6	
		TDV-T	230.5	214.2	16.3	
		SOURCE	20.2	16.2	4.0	
	255°	TDV-E	291.0	218.8	72.3	
		TDV-T	239.8	218.8	21.0	
		SOURCE	20.8	16.4	4.4	
	300°	TDV-E	286.4	217.8	68.6	
		TDV-T	235.1	217.8	17.3	
		SOURCE	20.4	16.3	4.1	
	345°	TDV-E	270.6	211.9	58.7	
		TDV-T	219.3	211.9	7.5	
		SOURCE	19.3	15.9	3.4	
CZ Group	Climate Zone 15 Palm Spring-Intl	Azimuth (Front Orientation)	Standard Design	Proposed Design	Margin	Worst Case
D	30°	TDV-E	309.4	250.4	59.0	
		TDV-T	221.6	203.1	18.5	
		SOURCE	18.4	13.9	4.4	
	75°	TDV-E	321.6	254.3	67.2	
		TDV-T	233.8	208.0	25.8	
		SOURCE	19.3	14.2	5.0	
	120°	TDV-E	320.6	252.3	68.3	
		TDV-T	232.8	207.4	25.4	
		SOURCE	19.0	14.1	4.9	
	165°	TDV-E	290.6	246.7	43.9	Worst Case
		TDV-T	202.8	199.3	3.5	Worst Case
		SOURCE	16.9	13.6	3.3	Worst Case
	210°	TDV-E	311.8	249.5	62.2	
		TDV-T	224.0	202.2	21.7	
		SOURCE	18.6	13.9	4.7	
	255°	TDV-E	326.8	253.5	73.2	
		TDV-T	239.0	207.2	31.8	
		SOURCE	19.8	14.2	5.6	
	300°	TDV-E	317.1	252.7	64.4	
		TDV-T	229.3	206.1	23.2	
		SOURCE	18.8	14.0	4.9	
	345°	TDV-E	298.7	247.7	51.1	
		TDV-T	211.0	200.3	10.7	
		SOURCE	17.4	13.6	3.8	

PC DESIGN REVIEW INFORMATION
Title 24-2022, Part6, Energy Code

Model Name and Option: AMS 108x40 — Calculation Date/Time of Energy Report: 9/3/2023
Total Floor Area: 4320 — DSA Application:
HVAC System Type: VSHP

CZ Group	Climate Zone 16 Blue Canyon	Metric	Standard Design	Proposed Design	Margin	Worst Case
A	30°	TDV-E	254.3	193.0	61.3	
		TDV-T	214.7	193.0	21.7	
		SOURCE	29.0	17.9	11.2	
	75°	TDV-E	268.1	196.2	71.9	
		TDV-T	228.5	196.2	32.3	
		SOURCE	29.7	18.1	11.6	
	120°	TDV-E	256.3	195.7	60.6	
		TDV-T	216.7	195.7	21.0	
		SOURCE	29.1	18.1	11.0	
	165°	TDV-E	267.6	191.9	75.7	
		TDV-T	228.0	191.9	36.1	
		SOURCE	35.4	17.8	17.6	
	210°	TDV-E	255.7	192.6	63.2	
		TDV-T	216.1	192.6	23.6	
		SOURCE	29.1	17.8	11.3	
	255°	TDV-E	268.1	195.2	72.9	
		TDV-T	228.5	195.2	33.3	
		SOURCE	29.7	18.0	11.6	
	300°	TDV-E	257.4	194.8	62.6	
		TDV-T	217.8	194.8	23.0	
		SOURCE	29.1	18.0	11.1	
	345°	TDV-E	239.5	191.5	47.9	Worst Case
		TDV-T	199.9	191.5	8.3	Worst Case
		SOURCE	28.2	17.7	10.4	Worst Case
CZ Group	Climate Zone 05 Santa Maria	Azimuth (Front Orientation)	Standard Design	Proposed Design	Margin	Worst Case
B	30°	TDV-E	178.8	110.7	68.1	Worst Case
		TDV-T	139.0	110.7	28.3	Worst Case
		SOURCE	14.5	10.9	3.6	Worst Case
	75°	TDV-E	199.4	110.9	88.5	
		TDV-T	159.6	110.9	48.7	
		SOURCE	16.2	11.0	5.3	
	120°	TDV-E	190.9	110.1	80.8	
		TDV-T	151.1	110.1	41.0	
		SOURCE	15.6	10.9	4.7	
	165°	TDV-E	191.2	109.3	81.9	
		TDV-T	151.4	109.3	42.1	
		SOURCE	15.6	10.9	4.8	
	210°	TDV-E	198.6	110.6	88.0	
		TDV-T	158.8	110.6	48.2	
		SOURCE	16.2	10.9	5.3	
	255°	TDV-E	199.2	110.6	88.5	
		TDV-T	159.4	110.6	48.7	
		SOURCE	16.2	10.9	5.3	
	300°	TDV-E	190.5	109.8	80.8	
		TDV-T	150.7	109.8	41.0	
		SOURCE	15.5	10.9	4.7	
	345°	TDV-E	191.6	109.2	82.4	
		TDV-T	151.8	109.2	42.6	
		SOURCE	15.6	10.8	4.7	
CZ Group	Climate Zone 13 Fresno	Azimuth (Front Orientation)	Standard Design	Proposed Design	Margin	Worst Case
C	30°	TDV-E	252.5	166.6	85.9	
		TDV-T	201.2	166.6	34.6	
		SOURCE	17.3	11.7	5.6	
	75°	TDV-E	260.0	172.7	87.3	
		TDV-T	208.7	172.7	36.0	
		SOURCE	17.8	11.9	5.8	
	120°	TDV-E	256.8	171.2	85.6	
		TDV-T	205.5	171.2	34.4	
		SOURCE	17.4	11.9	5.6	
	165°	TDV-E	265.9	163.6	102.3	
		TDV-T	214.6	163.6	51.0	
		SOURCE	18.8	11.4	7.3	
	210°	TDV-E	250.4	166.1	84.3	
		TDV-T	199.1	166.1	33.0	
		SOURCE	17.1	11.6	5.4	Worst Case
	255°	TDV-E	261.8	173.0	88.8	
		TDV-T	210.6	173.0	37.6	
		SOURCE	17.7	11.9	5.8	
	300°	TDV-E	255.9	171.9	84.0	Worst Case
		TDV-T	204.7	171.9	32.8	Worst Case
		SOURCE	17.3	11.8	5.5	
	345°	TDV-E	266.7	164.2	102.5	
		TDV-T	215.5	164.2	51.3	
		SOURCE	18.8	11.4	7.4	
CZ Group	Climate Zone 15 Palm Spring-Intl	Azimuth (Front Orientation)	Standard Design	Proposed Design	Margin	Worst Case
D	30°	TDV-E	308.0	198.9	109.1	
		TDV-T	220.2	181.7	38.5	
		SOURCE	18.3	11.3	7.0	
	75°	TDV-E	321.9	204.3	117.6	
		TDV-T	234.2	187.6	46.6	
		SOURCE	19.3	11.5	7.7	
	120°	TDV-E	312.6	202.6	110.0	
		TDV-T	224.9	186.4	38.5	
		SOURCE	18.5	11.4	7.1	
	165°	TDV-E	267.7	195.7	72.0	Worst Case
		TDV-T	180.0	178.6	1.4	Worst Case
		SOURCE	14.5	10.9	3.5	Worst Case
	210°	TDV-E	309.6	198.8	110.8	
		TDV-T	221.8	181.7	40.1	
		SOURCE	18.4	11.3	7.1	
	255°	TDV-E	301.1	205.1	96.0	
		TDV-T	213.4	188.3	25.0	
		SOURCE	17.0	11.6	5.4	
	300°	TDV-E	293.1	203.5	89.6	
		TDV-T	205.4	186.7	18.7	
		SOURCE	16.2	11.4	4.9	
	345°	TDV-E	269.8	196.2	73.6	
		TDV-T	182.0	179.1	3.0	
		SOURCE	14.6	11.0	3.6	

PC DESIGN REVIEW INFORMATION
Title 24-2022, Part6, Energy Code

Model Name and Option: AMS 120x40 — Calculation Date/Time of Energy Report: 9/3/2023
Total Floor Area: 4800 — DSA Application:
HVAC System Type: VSHP

CZ Group	Climate Zone 16 Blue Canyon	Metric	Standard Design	Proposed Design	Margin	Worst Case
A	30°	TDV-E	253.4	205.8	47.6	
		TDV-T	213.8	205.8	8.0	
		SOURCE	29.5	19.3	10.2	
	75°	TDV-E	265.3	208.5	56.8	
		TDV-T	225.7	208.5	17.2	
		SOURCE	30.1	19.6	10.5	
	120°	TDV-E	255.1	208.5	46.6	
		TDV-T	215.5	208.5	7.0	
		SOURCE	29.6	19.6	10.0	
	165°	TDV-E	282.2	205.5	76.6	
		TDV-T	242.6	205.5	37.0	
		SOURCE	39.8	19.4	20.4	
	210°	TDV-E	258.7	206.5	52.2	
		TDV-T	219.1	206.5	12.6	
		SOURCE	29.8	19.4	10.4	
	255°	TDV-E	271.8	208.5	63.3	
		TDV-T	232.2	208.5	23.7	
		SOURCE	30.4	19.6	10.8	
	300°	TDV-E	259.0	207.9	51.1	
		TDV-T	219.4	207.9	11.5	
		SOURCE	29.7	19.6	10.1	
	345°	TDV-E	244.3	204.7	39.7	Worst Case
		TDV-T	204.7	204.7	0.1	Worst Case
		SOURCE	28.9	19.3	9.6	Worst Case
CZ Group	Climate Zone 05 Santa Maria	Azimuth (Front Orientation)	Standard Design	Proposed Design	Margin	Worst Case
B	30°	TDV-E	183.1	115.4	67.7	Worst Case
		TDV-T	143.3	115.4	27.9	Worst Case
		SOURCE	15.0	11.4	3.6	Worst Case
	75°	TDV-E	214.0	115.6	98.5	
		TDV-T	174.2	115.6	58.7	
		SOURCE	17.6	11.4	6.2	
	120°	TDV-E	204.0	114.7	89.3	
		TDV-T	164.2	114.7	49.5	
		SOURCE	16.9	11.4	5.4	
	165°	TDV-E	200.4	113.8	86.6	
		TDV-T	160.6	113.8	46.8	
		SOURCE	16.6	11.4	5.2	
	210°	TDV-E	207.4	115.0	92.4	
		TDV-T	167.6	115.0	52.6	
		SOURCE	17.1	11.4	5.6	
	255°	TDV-E	208.3	115.0	93.3	
		TDV-T	168.5	115.0	53.5	
		SOURCE	17.1	11.4	5.7	
	300°	TDV-E	199.7	114.1	85.5	
		TDV-T	159.9	114.1	45.7	
		SOURCE	16.5	11.4	5.1	
	345°	TDV-E	204.4	113.7	90.8	
		TDV-T	164.6	113.7	51.0	
		SOURCE	16.8	11.3	5.5	
CZ Group	Climate Zone 13 Fresno	Azimuth (Front Orientation)	Standard Design	Proposed Design	Margin	Worst Case
C	30°	TDV-E	284.6	213.3	71.2	
		TDV-T	233.3	213.3	20.0	
		SOURCE	20.3	16.0	4.3	
	75°	TDV-E	296.1	218.7	77.4	
		TDV-T	244.9	218.7	26.1	
		SOURCE	21.1	16.3	4.8	
	120°	TDV-E	289.7	217.3	72.4	
		TDV-T	238.4	217.3	21.1	
		SOURCE	20.7	16.3	4.4	
	165°	TDV-E	268.3	210.6	57.7	Worst Case
		TDV-T	217.0	210.6	6.4	Worst Case
		SOURCE	19.0	15.9	3.2	Worst Case
	210°	TDV-E	279.7	212.8	66.9	
		TDV-T	228.5	212.8	15.7	
		SOURCE	20.0	16.1	3.9	
	255°	TDV-E	289.3	217.6	71.7	
		TDV-T	238.0	217.6	20.4	
		SOURCE	20.6	16.3	4.3	
	300°	TDV-E	284.5	216.6	67.9	
		TDV-T	233.2	216.6	16.6	
		SOURCE	20.2	16.2	4.0	
	345°	TDV-E	268.7	210.5	58.3	
		TDV-T	217.5	210.5	7.0	
		SOURCE	19.1	15.8	3.3	
CZ Group	Climate Zone 15 Palm Spring-Intl	Azimuth (Front Orientation)	Standard Design	Proposed Design	Margin	Worst Case
D	30°	TDV-E	307.5	249.0	58.5	
		TDV-T	219.7	200.0	19.7	
		SOURCE	18.2	13.8	4.4	
	75°	TDV-E	319.8	253.2	66.6	
		TDV-T	232.0	205.1	26.8	
		SOURCE	19.1	14.1	5.0	
	120°	TDV-E	318.4	251.1	67.3	
		TDV-T	230.7	204.5	26.2	
		SOURCE	18.9	14.0	4.9	
	165°	TDV-E	288.6	245.2	43.4	Worst Case
		TDV-T	200.8	196.1	4.7	Worst Case
		SOURCE	16.7	13.4	3.3	Worst Case
	210°	TDV-E	309.8	248.1	61.7	
		TDV-T	222.1	199.1	23.0	
		SOURCE	18.5	13.8	4.7	
	255°	TDV-E	325.0	252.4	72.6	
		TDV-T	237.3	204.4	32.9	
		SOURCE	19.6	14.0	5.6	
	300°	TDV-E	315.2	251.5	63.7	
		TDV-T	227.4	203.2	24.3	
		SOURCE	18.7	13.8	4.9	
	345°	TDV-E	296.8	246.3	50.5	
		TDV-T	209.0	197.1	11.9	
		SOURCE	17.2	13.4	3.8	

IDENTIFICATION STAMP
DIV. OF THE STATE ARCHITECT
APP: 03-124589 INC:
REVIEWED FOR
SS ☑ FLS ☑ ACS ☑
DATE: 04/15/2025

AMS®
American Modular Systems
787 Spreckels Ave., Manteca, CA 95336
Phone (209) 825-1921 Fax (209) 825-7018
www.americanmodular.com

INTELLECTUAL-PROPERTY & PROPRIETARY RIGHTS STATEMENT
COPYRIGHT © AMERICAN MODULAR SYSTEMS (AMS)
AMS OWNS ALL COPYRIGHT AND OTHER INTELLECTUAL-PROPERTY AND PROPRIETARY RIGHTS IN THESE DRAWINGS, SPECIFICATIONS, AND THE MATERIAL CONTAINED HEREIN. CERTAIN ELEMENTS SHOWN IN THESE DOCUMENTS ARE REGISTERED TRADEMARKS OF AMS. ALL PATENTABLE MATERIALS CONTAINED IN THESE DOCUMENTS AND ORIGINATING WITH AMS WILL REMAIN THE SOLE PROPERTY OF AMS. THESE DRAWING, SPECIFICATIONS, AND THE MATERIAL CONTAINED HEREIN MAY NOT BE REPRODUCED, TRANSMITTED, COPIED, DISTRIBUTED, MODIFIED, OR OTHERWISE DISPOSED OF (DIRECTLY OR INDIRECTLY) AND MAY NOT BE USED (IN WHOLE OR IN PART) TO ASSIST IN THE CONSTRUCTION, DESIGN, OR OTHER MAKING OF, OR FOR THE PURPOSE OF FURNISHING ANY INFORMATION FOR THE CONSTRUCTION, DESIGN, OR OTHER MAKING OF, ANY BUILDINGS (MODULAR OR OTHERWISE), DRAWINGS, SPECIFICATIONS, PRINTS, APPARATUS, OR PARTS THEREOF, EXCEPT AS EXPRESSLY PERMITTED BY WRITTEN CONSENT OF, OR IN A WRITTEN AGREEMENT WITH, AMS. SUBMITTAL OR DISTRIBUTION TO MEET OFFICIAL REGULATORY REQUIREMENTS WILL NOT BE CONSTRUED AS PUBLICATION IN DEROGATION OF AMS'S COPYRIGHT OR OTHER INTELLECTUAL-PROPERTY OR PROPRIETARY RIGHTS.

PRE-CHECKED SET NAME
24' x 40' THRU 120' x 40'
STANDARD MODULAR BUILDING
(HIGH SEISMIC)
FORM®

SITE SPECIFIC PROJECT NAME
VENTURA COLLEGE
(1) 72'x40' BUILDING

APPROVED
DIV. OF THE STATE ARCHITECT
APP: 04-122051 PC
REVIEWED FOR
SS ☑ FLS ☑ ACS ☑ CG ☑
DATE: 04/03/2024

☒ 2022 CBC PRE-CHECK (PC) DOCUMENT
A SEPARATE PROJECT APPLICATION FOR CONSTRUCTION IS REQUIRED.

MANUFACTURER PROFESSIONAL OF RECORD ON PC
LICENSED ARCHITECT
RANDALL PATRICK CAVANAGH
No. C12631
Ren. 3-31-25
STATE OF CALIFORNIA

THESE DRAWINGS ARE PRELIMINARY AND NOT FOR CONSTRUCTION UNLESS STAMPED & SIGNED BY THE DESIGN PROFESSIONAL OF RECORD.

REVISIONS
1
2
3
4

DRAWN BY:	AA
SCALE:	AS NOTED
DATE:	MM/DD/YY
PROJECT NO:	XXXX-22

SHEET TITLE:
ENERGY CALCULATIONS SUMMATION SHEET

SHEET NUMBER:
EN.1B

STATE OF CALIFORNIA
Solar And Battery
CALIFORNIA ENERGY COMMISSION

CERTIFICATE OF COMPLIANCE	NRCC-SAB-E

This document is used to demonstrate compliance with prescriptive PV and battery requirements in 140.10/ 170.2 for nonresidential, multifamily and mixed-use buildings and prescriptive solar thermal requirements in 170.2(d)3C for multifamily and hotel/ motel occupancies. When PV/battery/solar thermal requirements don't apply or are traded using the performance approach, this document demonstrates compliance with mandatory solar readiness requirements in 110.10/ 160.8 for newly constructed buildings which are either multifamily ten stories or fewer, hotel/motel ten stories or fewer or all other nonresidential buildings three stories or fewer. It is also used to demonstrate compliance with solar readiness in 110.10/ 160.8 for additions to nonresidential, multifamily or hotel/motel building types which add more than 2,000 ft² of roof area. Alterations, or additions of less than 2,000 ft² of roof area, are not required to comply with solar readiness, solar PV and battery requirements and do not need to complete this document.

Project Name:	AMS PC 24-120x40	**Report Page:**	**(Page 1 of 7)**
Project Address:		**Date Prepared:**	2023-10-10T21:09:32-04:00

A. GENERAL INFORMATION

01	Project Location (city)	Palm Spring-Intl	04	Building Occupancies	School or Classroom
02	Climate Zone	15	05	Construction Type	New construction
03	Conditioned Floor Area (ft²)	4800	06	Number of Stories	Bldg <= 3 stories

B. PROJECT SCOPE

The compliance path the project is using to comply per 110.10(b)1B/ 140.10/ 170.2(g and h) is indicated below.

Compliance with Solar Readiness Requirements in 110.10(b)1B

		01
☒	Provide Solar Ready Area no exceptions	The project has allocated a solar zone on the roof plan per requirements in §110.10(b), as documented in Table F.
☐	Exception to Solar Ready Area: Installed Solar Photovoltaic System	The project includes a permanently installed solar electric system having a nameplate DC power rating, measured under Standard Test Conditions, of no less than one watt per square foot of roof area as documented in Table G.
☐	Exception to Solar Ready Area: Installed Solar Water Heating System	The project is a hotel/motel or high-rise multifamily occupancy and includes a permanently installed domestic solar water-heating system complying with 170.2(d)3C and Reference Residential Appendix RA4, as documented in Table H.
☐	Exception to Solar Ready Area: Smart Thermostat and Alternative Energy Efficiency Measure	The project is a multifamily occupancy where all thermostats in each dwelling unit comply with §110.12(a) AND at least one additional measure listed in Exception 4 to §110.10(b)1B is installed, as documented in Table I.
☐	Exception to Solar Ready Area: Roof is designed for vehicular traffic, parking or for heliport	Plan sheet showing roof designed for vehicular traffic, parking or heliport
☐	Exception to Solar Ready Area: Roof too small	The project is new construction and has a total roof area <= 533 square feet[1]
☐	Exception to Solar Ready Area: Number of building stories	The project is nonresidential > 3 stories or multifamily/ hotel/motel > 10 stories.

[1]FOOTNOTE: Buildings with roof area <=533 ft² would have a required solar zone < 80 ft² and are therefore exempt per 110.10(b)1.

STATE OF CALIFORNIA
Solar And Battery
CALIFORNIA ENERGY COMMISSION

CERTIFICATE OF COMPLIANCE			NRCC-SAB-E
Project Name: AMS PC 24-120x40		**Report Page:**	**(Page 2 of 7)**
		Date Prepared:	2023-10-10T21:09:32-04:00

Compliance with Solar Photovoltaic (PV) and Battery Requirements in 140.10/ 170.2(g and h)

		01
☐	Provided PV system and battery storage sized per 140.10/ 170.2 (g and h)	The project has included an installed PV system and battery storage system per requirements in 140.10/ 170.2(g and h) as documented in Table J.
☐	Exception to PV and Battery: Not enough Solar Access Roof Area	The total of all available Solar Access Roof Area(s) of the project site is less than three percent of the conditioned floor area as documented in Table J.
☐	Exception to PV and Battery: Required PV < 4kW	The required PV system size is less than 4 kW dc as documented in Table J..
☐	Exception to PV and Battery: No contiguous Solar Access Roof Area	The Solar Access Roof Area(s) of the project site contains less than 80 contiguous square feet as documented in Table J.
☐	Exception to PV and Battery: Can't meet snow load	The project has a roof design where the enforcement authority has verified it is not possible for the PV system, including panels, modules, components, supports, and attachments to the roof structure, to meet ASCE 7-16 Chapter 7, Snow Loads.
☐	Exception to PV and Battery: Multi-tenant without VNEM or Community Solar	The project is a multi-tenant building in an area where a load serving entity does not provide either a Virtual Net Metering (VNEM) or community solar program.
☒	The prescriptive PV/battery requirement has been traded off using the performance compliance approach as documented on the PRF Certificate of Compliance form.	

Compliance with Solar Thermal Water Heating Requirements in 170.2(d)3C (Multifamily and hotel/ motel occupancies only)

	01
☐	The project includes a hotel/motel or multifamily occupancy with a gas or propane central water-heating system (serves 2+ dwelling units) and includes a permanently installed domestic solar water-heating system to comply with 170.2(d)3C and Reference Residential Appendix RA4, as documented in Table H. Compliance meets Exception 2 to solar ready requirements in 110.10(b).

STATE OF CALIFORNIA
Solar And Battery
CALIFORNIA ENERGY COMMISSION

CERTIFICATE OF COMPLIANCE			NRCC-SAB-E
Project Name: AMS PC 24-120x40		**Report Page:**	**(Page 3 of 7)**
		Date Prepared:	2023-10-10T21:09:32-04:00

C. COMPLIANCE RESULTS

Results in this table are automatically calculated from data input and calculations in Tables F through I. Note: If any cell on this table says "DOES NOT COMPLY" or "COMPLIES with Exceptional Conditions" refer to Table D. for guidance or see the applicable Table referenced below.

Allocated Solar Zone				Installed PV System				Installed SWH System				Smart Tstat and Alternative EE Measure		Compliance Results
01		02	OR	03		04	OR	05		06	OR	07	08	
Required Minimum Area (ft²)	<=	Designated Area (ft²)		Required Minimum DC Power Rating (Watts)	<=	Designed DC Power Rating (Watts)		Required Minimum Solar Savings Fraction	<=	Designed/Rated Solar Savings Fraction		JA5 Compliant Thermostat Specified?	Alternative Energy Efficiency Measure	COMPLIES
(See Table F)				(See Tables G or J)				(See Table H)				(See Table I)		
720	<=	720	OR		<=		OR		<=		OR			
A2.0 Roofing Plan for Solar Zones	Location in construction documents showing the location for inverters and metering equipment and a pathway for the routing of conduit/ plumbing to the electrical service/ water heating system per §110.10(c).													COMPLIES
Battery storage system design meets the minimum requirements in Joint Appendix JA12 and the minimum energy (kWh)/ power (kW) capacity per Table J.														Not Applicable

D. EXCEPTIONAL CONDITIONS

This table is auto-filled with uneditable comments because of selections made or data entered in tables throughout the form.

E. ADDITIONAL REMARKS

This table is includes remarks made by the permit applicant to the Authority Having Jurisdiction.

STATE OF CALIFORNIA
Solar And Battery
CALIFORNIA ENERGY COMMISSION

CERTIFICATE OF COMPLIANCE			NRCC-SAB-E
Project Name: AMS PC 24-120x40		**Report Page:**	**(Page 4 of 7)**
		Date Prepared:	2023-10-10T21:09:32-04:00

F. ALLOCATED SOLAR ZONE

This table is completed if the project is designating a solar zone to comply with §110.10(b)1B. New construction consider the total roof area; Additions consider newly added roof area. This table demonstrates that the project has designated the minimum area required for the Allocated Solar Zone, and also that the requirements for Solar Zone Subareas have been met. Each subarea must be shown on a roof plan or documented in construction documents. The solar zones must also comply with fire code requirements, including, but not limited to, setback and pathway requirements. Requirements for interconnection pathways must also be included in construction documents, and the location is specified in this table.

Required Minimum Solar Zone

01	02	03	04	05	06			07	08
					Potential Solar Zone Areas: Roof areas with >= 70% Solar Access				
Minimum Solar Zone Area Calculation Method	Total New or Added Roof Area (ft²)	Total New or Added Roof Area Covered with Skylights (ft²)	Minimum Solar Zone Based on Total or Added Roof Area (0.15 x (Roof-Skylt)) (ft²)	Method/ Tools Used to Determine Annual Solar Access for Potential Zones[1]	Low-Sloped Area (<= 2:12 pitch) (ft²)	Steep-Sloped Area (> 2:12 pitch) Oriented 90 ° - 300 ° (ft²)	Total Potential Solar Zone Area (ft²)	Minimum Solar Zone Based on Potential Zone (0.5 x (Total Potential Zone)) (ft²)	Required Minimum Solar Zone Area (ft²)
Total New or Added Roof Area	4800	0	720						720

Designated Solar Zone Subareas

09	10	11	12	13	14	15	16	17	18	19
Subarea Name or Tag	Building Plan Reference	Roof or Overhang Slope (Low <= 2:12 pitch) (Steep > 2:12 pitch)	Is Steep-Sloped Roof or Overhang between 90 and 300 degrees?	Subarea Complies with Title 24, Part 9	Solar Zone Subarea Free of Obstructions per §110.10(b)3 A	Subarea is Required Distance from Potential Obstructions per §110.10(b)3 B	Is the Smallest Dimension 5 feet or greater?	Min. Area Required per Subarea (ft²)	Designated Area (ft²)	Subarea Complies?
A2.0 Roofing Plan for Solar Zones	A2.0 Roofing Plan for Solar Zones	Low slope		Yes	Yes	Yes	Yes	80	720	COMPLIES

STATE OF CALIFORNIA
Solar And Battery
CALIFORNIA ENERGY COMMISSION

CERTIFICATE OF COMPLIANCE			NRCC-SAB-E
Project Name: AMS PC 24-120x40		**Report Page:**	**(Page 5 of 7)**
		Date Prepared:	2023-10-10T21:09:32-04:00

Interconnection Pathways

Location in construction documents showing the location for inverters and metering equipment and a pathway for the routing of conduit/ plumbing to the electrical service/ water heating system per §110.10(c).	A2.0 Roofing Plan for Solar Zones

[1]FOOTNOTE: This field is used to document how the percentage of annual solar access was determined per §110.10(b)1B. Solar access is the ratio of solar insolation including shade to the solar insolation without shade. Shading from obstructions located on the roof or any other part of the building shall not be included in the determination of annual solar access.

G. PERMANENTLY INSTALLED SOLAR PV FOR SOLAR READY EXCEPTION

This section does not apply to this project.

H. PERMANENTLY INSTALLED SOLAR HOT WATER SYSTEMS

This section does not apply to this project.

I. SMART THERMOSTATS AND ALTERNATIVE EFFICIENCY MEASURE FOR SOLAR READY EXCEPTION

This section does not apply to this project.

J. PHOTOVOLTAIC (PV) AND BATTERY SYSTEMS

This section does not apply to this project.

K. DECLARATION OF REQUIRED CERTIFICATES OF INSTALLATION

Selections have been made based on information provided in this document. If any selections have been changed by the permit applicant, an explanation should be included Table E. Additional Remarks and ExceptionalConditionMessageCCSABE += UserChangedSelectionInCI. These documents must be provided to the building inspector during construction and can be found online

Form/Title
NRCI-SAB-01-E - Must be submitted for all buildings that must comply with solar readiness or PV/Battery requirements.

STATE OF CALIFORNIA
Solar And Battery
CALIFORNIA ENERGY COMMISSION

CERTIFICATE OF COMPLIANCE			NRCC-SAB-E
Project Name: AMS PC 24-120x40		**Report Page:**	**(Page 6 of 7)**
		Date Prepared:	2023-10-10T21:09:32-04:00

L. DECLARATION OF REQUIRED CERTIFICATES OF ACCEPTANCE

There are no forms required for this project.

STATE OF CALIFORNIA
Solar And Battery
CALIFORNIA ENERGY COMMISSION

CERTIFICATE OF COMPLIANCE			NRCC-SAB-E
Project Name: AMS PC 24-120x40		**Report Page:**	**(Page 7 of 7)**
Project Address:		**Date Prepared:**	2023-10-10T21:09:32-04:00

DOCUMENTATION AUTHOR'S DECLARATION STATEMENT

I certify that this Certificate of Compliance documentation is accurate and complete.

Documentation Author Name:	Hans Marsman	Documentation Author Signature:	Digitally signed by Hans Marsman, LEED AP, CEA Date: 2023.10.10 15:07:47-06'00'
Company:	Marsman Consulting	Signature Date:	
Address:	1150 J Street #409	CEA/ HERS Certification Identification (if applicable):	
City/State/Zip:	San Diego, CA 92101	Phone:	(619) 573-6374

RESPONSIBLE PERSON'S DECLARATION STATEMENT

I certify the following under penalty of perjury, under the laws of the State of California:

1. The information provided on this Certificate of Compliance is true and correct.
2. I am eligible under Division 3 of the Business and Professions Code to accept responsibility for the building design or system design identified on this Certificate of Compliance (responsible designer)
3. The energy features and performance specifications, materials, components, and manufactured devices for the building design or system design identified on this Certificate of Compliance conform to the requirements of Title 24, Part 1 and Part 6 of the California Code of Regulations.
4. The building design features or system design features identified on this Certificate of Compliance are consistent with the information provided on other applicable compliance documents, worksheets, calculations, plans and specifications submitted to the enforcement agency for approval with this building permit application.
5. I will ensure that a completed signed copy of this Certificate of Compliance shall be made available with the building permit(s) issued for the building, and made available to the enforcement agency for all applicable inspections. I understand that a completed signed copy of this Certificate of Compliance is required to be included with the documentation the builder provides to the building owner at occupancy.

Responsible Designer Name:	Randall P Cavannagh	Responsible Designer Signature:	
Company:	American Modular Systems | Gen7 Schools	Date Signed:	10/10/2023
Address:	787 Spreckels Avenue	License:	C12631
City/State/Zip:	Manteca, CA 95336	Phone:	209.825.1921

IDENTIFICATION STAMP
DIV. OF THE STATE ARCHITECT
APP: 03-124589 INC:
REVIEWED FOR
SS ☑ FLS ☑ ACS ☑
DATE: 04/15/2025

American Modular Systems
787 Spreckels Ave., Manteca, CA 95336
Phone (209) 825-1921 Fax (209) 825-7018
www.americanmodular.com

INTELLECTUAL-PROPERTY & PROPRIETARY RIGHTS STATEMENT
COPYRIGHT © AMERICAN MODULAR SYSTEMS (AMS)
AMS OWNS ALL COPYRIGHT AND OTHER INTELLECTUAL-PROPERTY AND PROPRIETARY RIGHTS IN THESE DRAWINGS, SPECIFICATIONS, AND THE MATERIAL CONTAINED HEREIN. CERTAIN ELEMENTS SHOWN IN THESE DOCUMENTS ARE REGISTERED TRADEMARKS OF AMS. ALL PATENTABLE MATERIALS CONTAINED IN THESE DOCUMENTS AND ORIGINATING WITH AMS WILL REMAIN THE SOLE PROPERTY OF AMS. THESE DRAWING, SPECIFICATIONS, AND THE MATERIAL CONTAINED HEREIN MAY NOT BE REPRODUCED, TRANSMITTED, COPIED, DISTRIBUTED, MODIFIED, OR OTHERWISE DISPOSED OF (DIRECTLY OR INDIRECTLY) AND MAY NOT BE USED (IN WHOLE OR IN PART) TO ASSIST IN THE CONSTRUCTION, DESIGN, OR OTHER MAKING OF, OR FOR THE PURPOSE OF FURNISHING ANY INFORMATION FOR THE CONSTRUCTION, DESIGN, OR OTHER MAKING OF, ANY BUILDINGS (MODULAR OR OTHERWISE), DRAWINGS, SPECIFICATIONS, PRINTS, APPARATUS, OR PARTS THEREOF, EXCEPT AS EXPRESSLY PERMITTED BY WRITTEN CONSENT OF, OR IN A WRITTEN AGREEMENT WITH, AMS. SUBMITTAL OR DISTRIBUTION TO MEET OFFICIAL REGULATORY REQUIREMENTS WILL NOT BE CONSTRUED AS PUBLICATION IN DEROGATION OF AMS'S COPYRIGHT OR OTHER INTELLECTUAL-PROPERTY OR PROPRIETARY RIGHTS.

PRE-CHECKED SET NAME
24' x 40' THRU 120' x 40'
STANDARD MODULAR BUILDING
(HIGH SEISMIC)
FORM

SITE SPECIFIC PROJECT NAME
VENTURA COLLEGE
(1) 72'x40' BUILDING

APPROVED
DIV. OF THE STATE ARCHITECT
APP: 04-122051 PC
REVIEWED FOR
SS ☑ FLS ☑ ACS ☑ CG ☑
DATE: 04/03/2024

☒ 2022 CBC PRE-CHECK (PC) DOCUMENT
A SEPARATE PROJECT APPLICATION FOR CONSTRUCTION IS REQUIRED.

MANUFACTURER PROFESSIONAL OF RECORD ON PC
LICENSED ARCHITECT
RANDALL PATRICK CAVANAGH
No. C12631
Ren. 3-31-25
STATE OF CALIFORNIA

THESE DRAWINGS ARE PRELIMINARY AND NOT FOR CONSTRUCTION UNLESS STAMPED & SIGNED BY THE DESIGN PROFESSIONAL OF RECORD.

REVISIONS
1
2
3
4

DRAWN BY:	AA
SCALE:	AS NOTED
DATE:	MM/DD/YY
PROJECT NO:	XXXX-22

SHEET TITLE:
ENERGY CALCULATIONS SUMMATION SHEET

SHEET NUMBER:
EN.1C

Project Name: PC 72x40 **Date Prepared:** 2023-09-03

A. General Information

1	Project Name	PC 72x40			
2	Run Title	Title 24 Analysis			
3	Project Location				
4	City	Fresno	5	Standards Version	Compliance 2022
6	Zip code	93703	7	Compliance Software (version)	CBECC 2022.3.0 (1302)
8	Climate Zone	13	9	Building Orientation (deg)	300
10	Building Type(s)	• Nonresidential	11	Weather File	FRESNO-YOSEMITE_STYP20.epw
12	Project Scope	• New complete scope	13	Number of Dwelling Units	0
14	Total Conditioned Floor Area in Scope (ft²)	2880	15	Total # of hotel/motel rooms	0
16	Total Unconditioned Floor Area (ft²)	0	17	Fuel Type	None
18	Nonresidential Conditioned Floor Area	2880	19	Total # of Stories (Habitable Above Grade)	1
20	Residential Conditioned Floor Area	0			

B. PROJECT SUMMARY

Table B shows which building components are included in the performance calculation. If indicated as not included, the project must show compliance prescriptively if within the permit application.

Building Components Complying via Performance						Building Components Complying Prescriptively	
Envelope (See Table G)	Nonres	Performance	Solar Thermal Water Heating (See Table I3)	☐	Performance	The following building components are ONLY eligible for prescriptive compliance and should be documented on the NRCC form listed if within the scope of the permit application (i.e. compliance will not be shown on the NRCC-PRF-E).	
	MultiFam	Not Included		☒	Not Included		
Mechanical (See Table H)	Nonres	Performance	Covered Process: Commercial Kitchens (see Table J)	☐	Performance	Indoor Lighting (Unconditioned) 140.6 & 170.2(e)	NRCC-LTI-E is required
	MultiFam	Not Included		☒	Not Included	Outdoor Lighting 140.7 & 170.2(e)	NRCC-LTO-E is required
Domestic Hot Water (See Table I)	Nonres	Not Included	Covered Process: Laboratory Exhaust (see Table J)	☐	Performance	Sign Lighting 140.8 & 170.2(e)	NRCC-LTS-E is required
	MultiFam	Not Included		☒	Not Included	**Building Components Complying with Mandatory Measures**	
Lighting (Indoor Conditioned, see Table K)	Nonres	Performance	Photovoltaics (see Table F)	☒	Performance	Electrical power systems, commissioning, solar ready, elevator and escalator requirements are mandatory and should be documented on the NRCC form listed if applicable (i.e. compliance will not be shown on the NRCC-PRF-E.)	
	MultiFam	Not Included		☐	Not Included	Electrical Power Distribution 110.11	NRCC-ELC-E is required
			Battery (see Table F)	☐	Performance	Commissioning 120.8	NRCC-CXR-E is required
				☒	Not Included	Solar and Battery 110.10	NRCC-SAB-E is required

C1. COMPLIANCE SUMMARY

COMPLIES[3]

	Time Dependent Valuaton (TDV)		Source Energy Use
	Efficiency[1] (kBtu/ft² - yr)	Total[2] (kBtu/ft² - yr)	Total[2] (kBtu/ft² - yr)
Standard Design	198.68	147.41	12.24
Proposed Design	176.3	143.4	10.96
Compliance Margins	**22.38**	**4.01**	**1.28**
	Pass	**Pass**	**Pass**

[1] *Efficiency measures include improvements like a better building envelope and more efficient equipment*
[2] *Compliance Totals include efficiency, photovoltaics and batteries*
[3] *New Construction, Complete Addition Scope: Building complies when all efficiency and total compliance margins are greater than or equal to zero and unmet load hour limits are not exceeded*
Existing, Addition and Alteration Scope: Building complies when efficiency compliance margin is greater than or equal to zero and unmet load hour limits are not exceeded

C2. TDV ENERGY COMPLIANCE RESULTS FOR PERFORMANCE COMPONENTS (Annual TDV Energy Use, kBtu/ft² - yr)

COMPLIES[2]

Energy Component	Standard Design (TDV)	Proposed Design (TDV)	Compliance Margin (TDV)[1]
Space Heating	29.21	34.93	-5.72
Space Cooling	95.33	111.54	-16.21
Indoor Fans	52.22	9.79	42.43
Heat Rejection	0	0	0
Pumps & Misc.	0	0	0
Domestic Hot Water	0	0	0
Indoor Lighting	21.92	20.04	1.88
Flexibility	---	---	---
EFFICIENCY COMPLIANCE TOTAL	**198.68**	**176.3**	**22.38 (11.3%)**
Photovoltaics	-51.27	-32.9	-18.37
Batteries	---	---	---
TOTAL COMPLIANCE	**147.41**	**143.4**	**4.01 (2.7%)**

[1] *Notes: This number in parenthesis following the Compliance Margin in column 4, represents the Percent Better than Standard.*

C3. TDV ENERGY RESULTS FOR NON-REGULATED COMPONENTS[1]

Non-Regulated Energy Component	Standard Design (TDV)	Proposed Design (TDV)	Compliance Margin (TDV)[1]
Receptacle	65.89	65.89	---
Process	---	---	---
Other Ltg	---	---	---
Process Motors	---	---	---
TOTAL (TOTAL COMPLIANCE + NON-REGULATED COMPONENTS)	**213.3**	**209.29**	**4.01 (1.9%)**

[1] *Notes: This table is not used for Energy Code Compliance.*

C4. SOURCE ENERGY COMPLIANCE RESULTS FOR PERFORMANCE COMPONENTS (Annual SOURCE Energy Use, kBtu/ft² /yr)

COMPLIES[2]

Energy Component	Standard Design (SOURCE)	Proposed Design (SOURCE)	Compliance Margin (SOURCE)[1]
Space Heating	4.18	5	-0.82
Space Cooling	4.1	4.84	-0.74
Indoor Fans	3.71	0.66	3.05
Heat Rejection	0	0	0
Pumps & Misc.	0	0	0
Domestic Hot Water	0	0	0
Indoor Lighting	2.07	1.61	0.46
Flexibility	---	---	---
EFFICIENCY COMPLIANCE TOTAL	**14.06**	**12.11**	**1.95 (13.9%)**
Photovoltaics	-1.82	-1.15	-0.67
Batteries	---	---	---
TOTAL COMPLIANCE	**12.24**	**10.96**	**1.28 (10.5%)**

[1] *Notes: This number in parenthesis following the Compliance Margin in column 4, represents the Percent Better than Standard.*

C5. SOURCE ENERGY RESULTS FOR NON-REGULATED COMPONENTS[1]

Non-Regulated Energy Component	Standard Design (SOURCE)	Proposed Design (SOURCE)	Compliance Margin (SOURCE)[1]
Receptacle	4.93	4.93	---
Process	---	---	---
Other Ltg	---	---	---
Process Motors	---	---	---
TOTAL (TOTAL COMPLIANCE + NON-REGULATED COMPONENTS)	**17.17**	**15.89**	**1.28 (7.5%)**

[1] *Notes: This table is not used for Energy Code Compliance.*

C6. 'ABOVE CODE' QUALIFICATIONS

☐ This project is pursuing CalGreen Tier 1 ☐ This project is pursuing CalGreen Tier 2

C7. ENERGY USE SUMMARY

Energy Component	Standard Design Site (MWh)	Proposed Design Site (MWh)	Margin (MWh)	Standard Design Site (MBtu)	Proposed Design Site (MBtu)	Margin (MBtu)
Space Heating	2.7	3.3	-0.6	---	---	---
Space Cooling	7.4	8.8	-1.4	---	---	---
Indoor Fans	4.3	0.7	3.6	---	---	---
Heat Rejection	---	---	---	---	---	---
Pumps & Misc.	---	---	---	---	---	---
Domestic Hot Water	---	---	---	---	---	---
Indoor Lighting	2.3	2.2	0.1	---	---	---
Flexibility	---	---	---	---	---	---
EFFICIENCY TOTAL	**16.7**	**15**	**1.7**	**0**	**0**	**0**
Photovoltaics	-7.4	-4.7	-2.7	---	---	---
Batteries	---	---	---	---	---	---
ENERGY USE SUBTOTAL	**9.3**	**10.3**	**-1**	**0**	**0**	**0**
Receptacle	7.6	7.6	0	---	---	---
Process	---	---	---	---	---	---
Other Ltg	---	---	---	---	---	---
Process Motors	---	---	---	---	---	---
ENERGY USE TOTAL	**16.9**	**17.9**	**-1**	**0**	**0**	**0**

C8. ENERGY USE INTENSITY (EUI)

	Standard Design (kBtu/ft² / yr)	Proposed Design (kBtu/ft² / yr)	Margin (kBtu/ft² / yr)	Margin Percentage
GROSS EUI[1]	28.79	26.77	2.02	7.02
NET EUI[1]	20.02	21.21	-1.19	-5.94

[1] *Notes: Gross EUI is Energy Use Total (not including PV)/Total Building Area. Net EUI is Energy Use Total (including PV)/Total Building Area.*

D1. EXCEPTIONAL CONDITIONS

- The building does not include service water heating. Verify that service water heating is not required and is not included in the design.
- Project is claiming Exception 2 to Section 140.10(b): No battery storage system is required in buildings with battery storage system requirements with less than 10 kWh rated capacity.
- Project is claiming Exception 3 to Section 140.10(b): No battery storage system required for tenant spaces less than or equal to 5,000 ft2.

F1. REQUIRED PV SYSTEMS

01	02	03	04	05	06	07	08	09	10	11	12
DC System Size (kWdc)	Exception[1]	Module Type	Array Type	Power Electronics	CFI	Azimuth (deg)	Tilt Input	Array Angle (deg)	Tilt: (x in 12)	Inverter Eff. (%)	Annual Solar Access (%)
3.2	n/a	Standard (14-17%)	Fixed	Microinverters	false	120	Degrees	5	1.05	96	98

[1] *See Table D1 for any PV exceptions used.*

IDENTIFICATION STAMP
DIV. OF THE STATE ARCHITECT
APP: 03-124589 INC:
REVIEWED FOR
SS ☑ FLS ☑ ACS ☑
DATE: 04/15/2025

AMS®
American Modular Systems
787 Spreckels Ave., Manteca, CA 95336
Phone (209) 825-1921 Fax (209) 825-7018
www.americanmodular.com

INTELLECTUAL-PROPERTY & PROPRIETARY RIGHTS STATEMENT
COPYRIGHT © AMERICAN MODULAR SYSTEMS (AMS)
AMS OWNS ALL COPYRIGHT AND OTHER INTELLECTUAL-PROPERTY AND PROPRIETARY RIGHTS IN THESE DRAWINGS, SPECIFICATIONS, AND THE MATERIAL CONTAINED HEREIN. CERTAIN ELEMENTS SHOWN IN THESE DOCUMENTS ARE REGISTERED TRADEMARKS OF AMS. ALL PATENTABLE MATERIALS CONTAINED IN THESE DOCUMENTS AND ORIGINATING WITH AMS WILL REMAIN THE SOLE PROPERTY OF AMS. THESE DRAWING, SPECIFICATIONS, AND THE MATERIAL CONTAINED HEREIN MAY NOT BE REPRODUCED, TRANSMITTED, COPIED, DISTRIBUTED, MODIFIED, OR OTHERWISE DISPOSED OF (DIRECTLY OR INDIRECTLY) AND MAY NOT BE USED (IN WHOLE OR IN PART) TO ASSIST IN THE CONSTRUCTION, DESIGN, OR OTHER MAKING OF, OR FOR THE PURPOSE OF FURNISHING ANY INFORMATION FOR THE CONSTRUCTION, DESIGN, OR OTHER MAKING OF, ANY BUILDINGS (MODULAR OR OTHERWISE), DRAWINGS, SPECIFICATIONS, PRINTS, APPARATUS, OR PARTS THEREOF, EXCEPT AS EXPRESSLY PERMITTED BY WRITTEN CONSENT OF, OR IN A WRITTEN AGREEMENT WITH, AMS. SUBMITTAL OR DISTRIBUTION TO MEET OFFICIAL REGULATORY REQUIREMENTS WILL NOT BE CONSTRUED AS PUBLICATION IN DEROGATION OF AMS'S COPYRIGHT OR OTHER INTELLECTUAL-PROPERTY OR PROPRIETARY RIGHTS.

PRE-CHECKED SET NAME
24' x 40' THRU 120' x 40' STANDARD MODULAR BUILDING (HIGH SEISMIC)
FORM®

SITE SPECIFIC PROJECT NAME
VENTURA COLLEGE
(1) 72'x40' BUILDING

APPROVED
DIV. OF THE STATE ARCHITECT
APP: 04-122051 PC
REVIEWED FOR
SS ☑ FLS ☑ ACS ☑ CG ☑
DATE: 04/03/2024

☒ 2022 CBC PRE-CHECK (PC) DOCUMENT
A SEPARATE PROJECT APPLICATION FOR CONSTRUCTION IS REQUIRED.

MANUFACTURER PROFESSIONAL OF RECORD ON PC
LICENSED ARCHITECT RANDALL PATRICK CAVANAGH No. C12631 Ren. 3-31-25 STATE OF CALIFORNIA

THESE DRAWINGS ARE PRELIMINARY AND NOT FOR CONSTRUCTION UNLESS STAMPED & SIGNED BY THE DESIGN PROFESSIONAL OF RECORD.

REVISIONS
1
2
3
4

DRAWN BY:	AA
SCALE:	AS NOTED
DATE:	MM/DD/YY
PROJECT NO:	XXXX-22

SHEET TITLE:
ENERGY CALCULATIONS
72'x40' BUILDING
GROUP 'C'

SHEET NUMBER:
EN.40

F1B. PV BATTERY BUILDING TYPE(S)

01	02	03
Building Occupancy Type* (From Table 140.10-A/B and 170.2-U/V)	Conditioned Floor Area (ft²)	Unconditioned Floor Area (ft²)
Grocery	0	0
High-Rise Multifamily	0	0
Office, Financial Institutions, Unleased Tenant Space	0	0
Retail	0	0
School	2880	0
Warehouse	0	0
Auditorium, Convention Center, Hotel/Motel, Library, Medical Office Building/Clinic, Restaurant, Theater	0	0
None	0	0

Building Occupancy Types are defined in Section 100.1 of the Energy Code

G1. ENVELOPE GENERAL INFORMATION (conditioned spaces only)

01	02	03	04
Opaque Surfaces & Orientation	Total Gross Surface Area (ft²)	Total Fenestration Area (ft²)	Window to Wall Ratio (%)
North-Facing[1]	400	0	0
East-Facing[2]	720	240	33.33
South-Facing[3]	400	0	0
West-Facing[4]	720	240	33.33
Total	**2240**	**480**	**21.43**
Roof	2880	0	0

Notes
[1]North-Facing is oriented to within 45 degrees of true north, including 45 00'00" east of north (NE), but excluding 45 00'00" west of north (NW),
[2]East-Facing is oriented to within 45 degrees of true east, including 45 00'00" south of east (SE), but excluding 45 00'00" north of east (NE),
[3]South-Facing is oriented to within 45 degrees of true south, including 45 00'00" west of south (SW), but excluding 45 00'00" east of south (SE),
[4]West-Facing is oriented to within 45 degrees of true west, including 45 00'00" north of west (NW), but excluding 45 00'00" south of west (SW),

G4. NONRESIDENTIAL AIR BARRIER

01	02
Building Story Name	Air Barrier
Ground Floor	Air barrier - not verified

G5. OPAQUE SURFACE ASSEMBLY SUMMARY

01	02	03	04	05	06		07	08	09	10
Surface Name	Construction Type	Area (ft²)	Framing Type	Cavity R-Value	Continuous R-Value		Units	Value	Description of Assembly Layers	Status[1]
					Interior	Exterior				
Ext Roof	Roof	2,880	Metal	19	N/A	5	U-factor	0.0528	Metal Standing Seam - 1/16 in. Compliance Insulation R5.00 Plywood - 1/2 in. Roof Structure Air - Roof - 3 1/2 in. Acoustic Tile - 3/8 in.	N
Ext Wall	Exterior Wall	2,240	Metal	13	N/A	5	U-factor	0.0978	Wood siding - 1/2 in. Vapor permeable felt - 1/8 in. Compliance Insulation R5.00 R-13 in Metal Studs Gypsum Board - 1/2 in.	N
Floor over Crawlspace	Exterior Floor	2,880	N/A	0	N/A	N/A	U-factor	0.104	Vented Crawl Space Concrete - 140 lb/ft3 - 2 in. Carpet - 3/4 in.	N

[1] Status: N - New, A - Altered, E - Existing

G6A. OPAQUE DOOR SUMMARY (NONRESIDENTIAL)

01	02	03	04
Assembly Name	Area (ft²)	Overall U-factor	Status[1]
Door	63	0.7	N

[1] Status: N - New, A - Altered, E - Existing

G7A. FENESTRATION ASSEMBLY SUMMARY (NONRESIDENTIAL)

01	02	03	04	05	06	07	08	09
Fenestration Assembly Name	Fenestration Type/ Product Type / Frame Type	Certification Method[1]	Assembly Method	Area (ft²)	Overall U-factor	Overall SHGC	Overall VT	Status[2]
Windows	Vertical fenestration Fixed window N/A	NFRC	Manufactured	480	0.42	0.25	0.44	N

[1] Notes: Newly installed fenestration shall have a certified NFRC Label Certificate or use the CEC default tables found in Table 110.6-A and Table 110.6-B. Center of Glass (COG) values are for the glass-only, determined by the manufacturer, and are shown for ease of verification. Site-built fenestration values are calculated per Nonresidential Appendix NA6 and are used in the analysis.
[2] Status: N - New, A - Altered, E - Existing

H1. DRY SYSTEM EQUIPMENT (FURNACES, AIR HANDLING UNITS, HEAT PUMPS, VRF, ECONOMIZERS ETC.)

01	02	03	04	05	06	07	08	09	10	11	12
Equipment Name	Equipment Type	Qty	Heating				Cooling			Economizer Type (if present)	Status[1]
			Total Heating Output (kBtu/h)	Supp Heat Output (kBtu/h)	Efficiency Unit	Efficiency	Total Cooling Output (kBtu/h)	Efficiency Unit	Efficiency		
FC-1 L01	Package SZ VAV Heat Pump Air System	2	44.8	3.41	COP HSPF	3.55 8	47.5	EER SEER	11 14	No Economizer	N

[1] Status: N - New, A - Altered, E - Existing

H3. NONRESIDENTIAL / COMMON USE AREA FAN SYSTEMS SUMMARY

01	02	03	04	05	06	07	08	09	10	11	12	13
Name or Item Tag	Qty	Design OA CFM	Supply Fan				Return / Relief Fan					Status[1]
			CFM	Power	Power Units	Control	Fan Type	CFM	Power	Power Units	Control	
FC-1 L01	2	547.2	1,600	0.7	InH2O	VSD	N/A	N/A	N/A	N/A	N/A	N

[1] Status: N - New, A - Altered, E - Existing

H8. SYSTEM SPECIAL FEATURES

01	02	03	04
System Name	Equipment Type	Interlocks per 140.4(n)[1]	Other Special Features and Controls
FC-1 L01	Package SZ VAV Heat Pump Air System	No	Zone(s) With CO2 Sensor Vent. Control

Notes: This table includes controls related to the performance path only. For projects using the prescriptive path, mandatory and prescriptive controls requirements are documented on the NRCC-MCH-E.
[1] Yes = interlocks are provided, No = interlocks are not provided, NA means no operable openings.

H9. NONRESIDENTIAL / COMMON USE AREA & HOTEL/MOTEL VENTILATION

01	02	03	04	05	06	07
Zone Name	Mechanical Ventilation				Conditioned Area (sf)	DCV or Occupant Sensor Controls, or Both
	Ventilation Function	# of People	Supply OA CFM	Exhaust CFM		
Zn FC-1 L01	Education - Classrooms (ages 9-18)	72	1094.4	0	2880	DCV

H11. ZONAL SYSTEM AND TERMINAL UNIT SUMMARY

01	02	03	04	05	06	07	08	09	10	11	12
System ID	System Type	Qty	Rated Capacity (kBtuh)		Airflow (cfm)			Fan			VSD
			Heating	Cooling	Design	Min.	Min. Ratio	Power	Power Units	Cycles	
FC-1 L01_TRM	Variable Air Volume No Reheat Box	2	N/A	N/A	1,600	650	0.41	N/A	N/A	N/A	☐

K1. INDOOR CONDITIONED LIGHTING GENERAL INFO

01	02	03	04	05	06
Occupancy Type[1]	Conditioned Floor Area[2] (ft²)	Installed Lighting Power (Watts)	Lighting Control Credits (Watts)	Additional (Custom) Allowance	
				Area Category Footnotes (Watts)	Area Category Footnotes (Watts)
Classroom, Lecture, or Training Vocational	2880	1080	0	0	0
Building Totals:	**2880**	**1080**	**0**	**0**	**0**

[1]See Table 140.6-C
[2]See NRCC-LTI--E for unconditioned spaces
[3]Lighting information for existing spaces modeled is not included in this table

K2. INDOOR CONDITIONED LIGHTING SCHEDULE

Luminaire Schedule (includes all permanent installed lighting in conditioned space, and portable lighting over 0.3 w/ft² in offices)

01	02	03	04	05	06
Name or Item Tag	Complete Luminaire Description (i.e. 3-lamp fluorescent troffer, F32T8, one dimmable electronic ballast)	Installed Watts (Conditioned)			
		Watts per luminaire	How is Wattage determined	Total Number of Luminaires	Installed Watts
2x4 LED	2x4 - LED	45	According to 130.0(c)	24	1080

[1]If lighting power densities were used in the compliance model Building Departments will need to check prescriptive forms for Luminaire Schedule details.

K3. INDOOR CONDITIONED LIGHTING CONTROL CREDITS

Lighting Control Credits Schedule (includes all lighting controls installed in conditioned space for compliance credit per 140.6(a)2 and Table 140.6-A)

01	02	03	04	05	06	07	08	09
Area Description	Primary Function Area (must meet requirements of Table 140.6-A and 170.2-L)	Type of Lighting Control	Power Adjustment Factor (PAF)	Luminaire Item Tag	Watts per Luminaire	# of Luminaires	Lighting Controlled (Watts)	Control Credit (Watts)
L01 ClassRm 101	Classroom, Lecture, or Training Vocational	N/A	N/A	2x4 LED	45	6	270	0
L01 ClassRm 101	Classroom, Lecture, or Training Vocational	N/A	N/A	2x4 LED	45	18	810	0
Lighting Control Credits (Conditioned) Total (Watts)								0

K4. INDOOR CONDITIONED LIGHTING MANDATORY LIGHTING CONTROL

Building Level Controls

01	02
Mandatory Demand Response 110.12(c)	Shut-Off Controls 130.1(c) & 160.5(b)4C
NA	Required

Area Level Controls (includes all lighting controls installed in conditioned space to meet mandatory requirements per 130.1)

03	04	05	06	07	08	09
Area Description	Area Category Primary Function Area	Area Controls 130.1(a) & 160.5(b)4A	Multi-Level Controls 130.1(b) & 160.5(b)4B	Shut-Off Controls 130.1(c) & 160.5(b)4C	Primary Daylighting 130.1(d) & 160.5(b)4D	Secondary Daylighting 140.5(d) & 160.5(b)4D
Classrooms Daylt Zn	Classroom, Lecture, or Training Vocational	Required	Exempt	Required	Required	NA

L. DECLARATION OF REQUIRED CERTIFICATES OF INSTALLATION

Selections made by Documentation Author indicate which Certificates of Installation must be submitted for the features to be recognized for compliance. These documents must be retained and provided to the building inspector during construction and can be found online

Building Component	Form/Title
Envelope	NRCI-ENV-01-E - Must be submitted for all buildings
Envelope	NRCI-ENV-E - Envelope (for all buildings)
Mechanical	NRCI-MCH-01-E - Must be submitted for all buildings
Mechanical	NRCI-MCH-E - For all buildings with Mechanical Systems
Plumbing	NRCI-PLB-01-E - Must be submitted for all buildings
Indoor Lighting	NRCI-LTI-01-E - Must be submitted for all buildings
Indoor Lighting	NRCI-LTI-E - Indoor Lighting (for all buildings)
Indoor Lighting	NRCI-LTI-02-E- Must be submitted for a lighting control system, or for an Energy Management Control System (EMCS), to be recognized for compliance.

M. DECLARATION OF REQUIRED CERTIFICATES OF ACCEPTANCE

Selections made by Documentation Author indicate which Certificates of Acceptance must be submitted for the features to be recognized for compliance. These documents must be provided to the building inspector during construction and must be completed through an Acceptance Test Technician Certification Provider (ATTCP).

Building Component	Form/Title
Envelope	NRCA-ENV-02-F - NRFC label verification for fenestration
Indoor Lighting	NRCA-LTI-02-A - Occupancy Sensors and Automatic Time Switch Controls.
Indoor Lighting	NRCA-LTI-03-A - Automatic Daylight Controls.
Mechanical	NRCA-MCH-02-A - Outdoor Air must be submitted for all newly installed HVAC units. Note: MCH-02-A can be performed in conjunction with MCH-07-A Supply Fan VFD Acceptance (if applicable) since testing activities overlap

M. DECLARATION OF REQUIRED CERTIFICATES OF ACCEPTANCE

Selections made by Documentation Author indicate which Certificates of Acceptance must be submitted for the features to be recognized for compliance. These documents must be provided to the building inspector during construction and must be completed through an Acceptance Test Technician Certification Provider (ATTCP).

Building Component	Form/Title
Mechanical	NRCA-MCH-06-A Demand Control Ventilation Systems must be submitted for all systems required to employ demand controlled ventilation (refer to) can vary outside ventilation flow rates based on maintaining interior carbon dioxide (CO2) concentration setpoints.
Mechanical	NRCA-MCH-07-A Supply Fan Variable Flow Controls
Mechanical	NRCA-MCH-19-A Occupancy Sensor Controls

N. DECLARATION OF REQUIRED CERTIFICATES OF VERIFICATION

Selections made by Documentation Author indicate which Certificates of Verification must be submitted for the features to be recognized for compliance. These documents must be retained and provided to the building inspector during construction and can be found online

There are no Certificates of Verification applicable to this project

Documentation Author's Declaration Statement

1. I certify that this Certificate of Compliance documentation is accurate and complete.

Documentation Author Name: Hans Marsman, CEA, LEED AP BD+C	Documentation Author Signature: Digitally signed by Hans Marsman, LEED AP, CEA Date: 2023.09.07 15:07:47-06'00'
Company: Marsman Consulting	Signature Date:
Address: 1150 J Street #409	CEA/HERS Certification Identification (if applicable
City/State/Zip: San Diego, CA 92101	Phone: (619) 573-6374

Responsible Person's Declaration statement

I certify the following under penalty of perjury, under the laws of the State of California:

1. The information provided on this Certificate of Compliance is true and correct.
2. I am eligible under Division 3 of the Business and Professions Code to accept responsibility for the building design or system design identified on this Certificate of Compliance (responsible designer)
3. The energy features and performance specifications, materials, components, and manufactured devices for the building design or system design identified on this Certificate of Compliance conform to the requirements of Title 24, Part 1 and Part 6 of the California Code of Regulations.
4. The building design features or system design features identified on this Certificate of Compliance are consistent with the information provided on other applicable compliance documents, worksheets, calculations, plans and specifications submitted to the enforcement agency for approval with this building permit application.
5. I understand that a registered copy of this Certificate of Compliance shall be made available with the building permit(s) issued for the building, and made available to the enforcement agency for all applicable inspections, and I will take the necessary steps to accomplish this requirement.
6. I understand that a registered copy of this Certificate of Compliance is required to be included with the documentation the builder provides to the building owner at occupancy, and I will take the necessary steps to accomplish these requirements.

Responsible Designer Name: Randall P Cavannagh	Responsible Designer Signature:	
Company: American Modular Systems | Gen7 Schools		
Address: 787 Spreckels Avenue	Date Signed: 09/05/23	
City/State/Zip: Manteca, CA 95336	License #: C12631	
Phone: 209.825.1921	Title: Architect	Scope: Envelope
Responsible Designer Name: Randall P Cavannagh	Responsible Designer Signature:	
Company: American Modular Systems | Gen7 Schools		
Address: 787 Spreckels Avenue	Date Signed: 09/05/23	
City/State/Zip: Manteca, CA 95336	License #: C12631	
Phone: 209.825.1921	Title: Architect	Scope: Mechanical

IDENTIFICATION STAMP
DIV. OF THE STATE ARCHITECT
APP: 03-124589 INC:
REVIEWED FOR
SS ☑ FLS ☑ ACS ☑
DATE: 04/15/2025

American Modular Systems
787 Spreckels Ave., Manteca, CA 95336
Phone (209) 825-1921 Fax (209) 825-7018
www.americanmodular.com

INTELLECTUAL-PROPERTY & PROPRIETARY RIGHTS STATEMENT
COPYRIGHT © AMERICAN MODULAR SYSTEMS (AMS)
AMS OWNS ALL COPYRIGHT AND OTHER INTELLECTUAL-PROPERTY AND PROPRIETARY RIGHTS IN THESE DRAWINGS, SPECIFICATIONS, AND THE MATERIAL CONTAINED HEREIN. CERTAIN ELEMENTS SHOWN IN THESE DOCUMENTS ARE REGISTERED TRADEMARKS OF AMS. ALL PATENTABLE MATERIALS CONTAINED IN THESE DOCUMENTS AND ORIGINATING WITH AMS WILL REMAIN THE SOLE PROPERTY OF AMS. THESE DRAWING, SPECIFICATIONS, AND THE MATERIAL CONTAINED HEREIN MAY NOT BE REPRODUCED, TRANSMITTED, COPIED, DISTRIBUTED, MODIFIED, OR OTHERWISE DISPOSED OF (DIRECTLY OR INDIRECTLY) AND MAY NOT BE USED (IN WHOLE OR IN PART) TO ASSIST IN THE CONSTRUCTION, DESIGN, OR OTHER MAKING OF, OR FOR THE PURPOSE OF FURNISHING ANY INFORMATION FOR THE CONSTRUCTION, DESIGN, OR OTHER MAKING OF, ANY BUILDINGS (MODULAR OR OTHERWISE), DRAWINGS, SPECIFICATIONS, PRINTS, APPARATUS, OR PARTS THEREOF, EXCEPT AS EXPRESSLY PERMITTED BY WRITTEN CONSENT OF, OR IN A WRITTEN AGREEMENT WITH, AMS. SUBMITTAL OR DISTRIBUTION TO MEET OFFICIAL REGULATORY REQUIREMENTS WILL NOT BE CONSTRUED AS PUBLICATION IN DEROGATION OF AMS'S COPYRIGHT OR OTHER INTELLECTUAL-PROPERTY OR PROPRIETARY RIGHTS.

PRE-CHECKED SET NAME
24' x 40' THRU 120' x 40'
STANDARD MODULAR BUILDING
(HIGH SEISMIC)
FORM®

SITE SPECIFIC PROJECT NAME
VENTURA COLLEGE
(1) 72'x40' BUILDING

APPROVED
DIV. OF THE STATE ARCHITECT
APP: 04-122051 PC
REVIEWED FOR
SS ☑ FLS ☑ ACS ☑ CG ☑
DATE: 04/03/2024

☒ 2022 CBC PRE-CHECK (PC) DOCUMENT
A SEPARATE PROJECT APPLICATION FOR CONSTRUCTION IS REQUIRED.

MANUFACTURER PROFESSIONAL OF RECORD ON PC

LICENSED ARCHITECT
RANDALL PATRICK CAVANAGH
No. C12631
Ren. 3-31-25
STATE OF CALIFORNIA

THESE DRAWINGS ARE PRELIMINARY AND NOT FOR CONSTRUCTION UNLESS STAMPED & SIGNED BY THE DESIGN PROFESSIONAL OF RECORD.

REVISIONS
1
2
3
4

DRAWN BY:	AA
SCALE:	AS NOTED
DATE:	MM/DD/YY
PROJECT NO:	XXXX-22

SHEET TITLE:
ENERGY CALCULATIONS
72'x40' BUILDING
GROUP 'C'

SHEET NUMBER:
EN.41

CERTIFICATE OF COMPLIANCE - NONRESIDENTIAL PERFORMANCE COMPLIANCE METHOD	NRCC-PRF-E
Nonresidential Performance Compliance Method	(Page 19 of 19)

Responsible Designer Name: Randall P Cavannagh	Responsible Designer Signature:	
Company: American Modular Systems | Gen7 Schools		
Address: 787 Spreckels Avenue	Date Signed: 09/05/23	
City/State/Zip: Manteca, CA 95336	License #: C12631	
Phone: 209.825.1921	Title: Architect	Scope: Lighting

CA Building Energy Efficiency Standards - 2022 Nonresidential Compliance

Report Version: 2022.0.000
Schema Version: rev 20220601

Report Generated: 2023-09-03 10:46:16

IDENTIFICATION STAMP
DIV. OF THE STATE ARCHITECT
APP: 03-124589 INC:
REVIEWED FOR
SS ☑ FLS ☑ ACS ☑
DATE: 04/15/2025

AMS®
American Modular Systems
787 Spreckels Ave., Manteca, CA 95336
Phone (209) 825-1921 Fax (209) 825-7018
www.americanmodular.com

INTELLECTUAL-PROPERTY & PROPRIETARY RIGHTS STATEMENT
COPYRIGHT © AMERICAN MODULAR SYSTEMS (AMS)
AMS OWNS ALL COPYRIGHT AND OTHER INTELLECTUAL PROPERTY AND PROPRIETARY RIGHTS IN THESE DRAWINGS, SPECIFICATIONS, AND THE MATERIAL CONTAINED HEREIN. CERTAIN ELEMENTS SHOWN IN THESE DOCUMENTS ARE REGISTERED TRADEMARKS OF AMS. ALL PATENTABLE MATERIALS CONTAINED IN THESE DOCUMENTS AND ORIGINATING WITH AMS WILL REMAIN THE SOLE PROPERTY OF AMS. THESE DRAWING, SPECIFICATIONS, AND THE MATERIAL CONTAINED HEREIN MAY NOT BE REPRODUCED, TRANSMITTED, COPIED, DISTRIBUTED, MODIFIED, OR OTHERWISE DISPOSED OF (DIRECTLY OR INDIRECTLY) AND MAY NOT BE USED (IN WHOLE OR IN PART) TO ASSIST IN THE CONSTRUCTION, DESIGN, OR OTHER MAKING OF, OR FOR THE PURPOSE OF FURNISHING ANY INFORMATION FOR THE CONSTRUCTION, DESIGN, OR OTHER MAKING OF, ANY BUILDINGS (MODULAR OR OTHERWISE), DRAWINGS, SPECIFICATIONS, PRINTS, APPARATUS, OR PARTS THEREOF, EXCEPT AS EXPRESSLY PERMITTED BY WRITTEN CONSENT OF, OR IN A WRITTEN AGREEMENT WITH, AMS. SUBMITTAL OR DISTRIBUTION TO MEET OFFICIAL REGULATORY REQUIREMENTS WILL NOT BE CONSTRUED AS PUBLICATION IN DEROGATION OF AMS'S COPYRIGHT OR OTHER INTELLECTUAL-PROPERTY OR PROPRIETARY RIGHTS.

PRE-CHECKED SET NAME

24' x 40' THRU 120' x 40'
STANDARD MODULAR BUILDING
(HIGH SEISMIC)

FORM®

SITE SPECIFIC PROJECT NAME

VENTURA COLLEGE
(1) 72'x40' BUILDING

APPROVED
DIV. OF THE STATE ARCHITECT
APP: 04-122051 PC
REVIEWED FOR
SS ☑ FLS ☑ ACS ☑ CG ☑
DATE: 04/03/2024

☒ 2022 CBC PRE-CHECK (PC) DOCUMENT
A SEPARATE PRE-CHECK APPLICATION FOR CONSTRUCTION IS REQUIRED

MANUFACTURER PROFESSIONAL OF RECORD ON PC

LICENSED ARCHITECT
RANDALL PATRICK CAVANNAGH
No. C12631
Ren. 3-31-25
STATE OF CALIFORNIA

THESE DRAWINGS ARE PRELIMINARY AND NOT FOR CONSTRUCTION UNLESS STAMPED & SIGNED BY THE DESIGN PROFESSIONAL OF RECORD.

REVISIONS

1
2
3
4

DRAWN BY:	AA
SCALE:	AS NOTED
DATE:	MM/DD/YY
PROJECT NO:	XXXX-22

SHEET TITLE:

ENERGY CALCULATIONS
72'x40' BUILDING
GROUP 'C'

SHEET NUMBER:

EN.42

STATE OF CALIFORNIA
Indoor Lighting
CALIFORNIA ENERGY COMMISSION

CERTIFICATE OF COMPLIANCE		NRCC-LTI-E
This document is used to demonstrate compliance with requirements in 110.9, 110.12(c), 130.0, 130.1, 140.6 and 141.0(b)2 for indoor lighting scopes using the prescriptive path for nonresidential and hotel/motel occupancies. It is also used to document compliance with requirements in 160.5, 170.2(e) and 180.2(b)4 for indoor lighting scopes using the prescriptive path for multifamily occupancies. Multifamily includes dormitory and senior living facilities.		
Project Name: AMS PC 24x40 UC Ltg	**Report Page:**	**(Page 1 of 7)**
Project Address:	**Date Prepared:**	2023-03-06T11:31:48-05:00

A. GENERAL INFORMATION				
01	Project Location (city)	Palmdale	04 Total Conditioned Floor Area (ft^2)	0
02	Climate Zone	14	05 Total Unconditioned Floor Area (ft^2)	480
03	Occupancy Types Within Project (select all that apply):		06 # of Stories (Habitable Above Grade)	1
● Classroom				

B. PROJECT SCOPE

This table includes any lighting systems that are within the scope of the permit application and are demonstrating compliance using the prescriptive path outlined in 140.6 / 170.2(e) or 141.0(b)2 / 180.2(b)4 for alterations.

Scope of Work	Conditioned Spaces		Unconditioned Spaces	
01	02	03	04	05
My Project Consists of (check all that apply):	Calculation Method	Area (ft^2)	Calculation Method	Area (ft^2)
☒ New Lighting System	Area Category Method	0	Area Category Method	480
☐ New Lighting System - Parking Garage	N/A	0	N/A	0
Total Area of Work (ft^2)	480			

Registration Number: | Generated Date/Time: | Documentation Software: Energy Code Ace
CA Building Energy Efficiency Standards - 2022 Nonresidential Compliance | Report Version: 2022.0.000 Schema Version: rev 20220101 | Compliance ID: 93007-0323-0004 Report Generated: 2023-03-06 08:31:50

STATE OF CALIFORNIA
Indoor Lighting
CALIFORNIA ENERGY COMMISSION

CERTIFICATE OF COMPLIANCE		NRCC-LTI-E
Project Name: AMS PC 24x40 UC Ltg	**Report Page:**	**(Page 2 of 7)**
	Date Prepared:	2023-03-06T11:31:48-05:00

C. COMPLIANCE RESULTS

If any cell on this table says "DOES NOT COMPLY" or "COMPLIES with Exceptional Conditions" refer to Table D. for guidance.

Lighting in conditioned and unconditioned spaces must not be combined for compliance per 140.6(b)1 / 170.2(e)	Allowed Lighting Power per 140.6(b) / 170.2(e) (Watts)						Adjusted Lighting Power per 140.6(a) / 170.2(e) (Watts)				Compliance Results
	01	02	03	04		05	06	07		08	09
	Complete Building 140.6(c)1	Area Category 140.6(c)2 / 170.2(e)4	Area Category Additional 140.6(c)2G / 170.2(e)4Av (+)	Tailored 140.6(c)3 / 170.2(e)4B (+)		**Total Allowed** (Watts)	Total Designed (Watts)	Adjustments: PAF Lighting Control Credits 140.6(a)2 / 170.2(e)1B (-)		**Total Adjusted** (Watts) *Includes Adjustments	**05 must be >= 08 140.6 / 170.2(e)**
	(See Table I)	(See Table I)	(See Table J)	(See Table K)			(See Table F)	(See Table P)			
Conditioned					=				=		
Unconditioned		283.25			=	283.25	≥ 280		=	280	COMPLIES
Controls Compliance (See Table H for Details)											COMPLIES
Rated Power Reduction Compliance (See Table Q for Details)											

D. EXCEPTIONAL CONDITIONS

This table is auto-filled with uneditable comments because of selections made or data entered in tables throughout the form.

E. ADDITIONAL REMARKS

This table includes remarks made by the permit applicant to the Authority Having Jurisdiction.

Registration Number: | Generated Date/Time: | Documentation Software: Energy Code Ace
CA Building Energy Efficiency Standards - 2022 Nonresidential Compliance | Report Version: 2022.0.000 Schema Version: rev 20220101 | Compliance ID: 93007-0323-0004 Report Generated: 2023-03-06 08:31:50

STATE OF CALIFORNIA
Indoor Lighting
CALIFORNIA ENERGY COMMISSION

CERTIFICATE OF COMPLIANCE		NRCC-LTI-E
Project Name: AMS PC 24x40 UC Ltg	**Report Page:**	**(Page 3 of 7)**
	Date Prepared:	2023-03-06T11:31:48-05:00

F. INDOOR LIGHTING FIXTURE SCHEDULE

This table includes all planned permanent and portable lighting other than dwelling unit/ hotel/ motel room lighting. Multifamily dwelling unit and hotel/motel room lighting is documented in Table T. If using Table T to document lighting in multifamily common use areas providing shared provisions for living, eating, cooking or sanitation, those luminaires are not included here.

Designed Wattage: Unconditioned Spaces

01	02	03	04	05	06	07	08	09	10	
Name or Item Tag	Complete Luminaire Description	Modular (Track) Fixture	Small Aperture & Color Change[2]	Watts per luminaire[1]	How is Wattage determined	Total Number of Luminaires	Excluded per 140.6(a)3 / 170.2(e)2C	Design Watts	Field Inspector: Pass	Fail
2x4 LED	2x4 LED	No	NA	50	Mfr. Spec	4	No	200	☐	☐
40W Incandescent	40W Incandescent	No	NA	40	Mfr. Spec	2	No	80	☐	☐
Total Designed Watts: UNCONDITIONED SPACES								280		

[1]*FOOTNOTE: Design Watts for small aperture and color changing luminaires which qualify per 140.6(a)4B / 170.2(e)2D is adjusted to be 75%/80% of their rated wattage. Table F automatically makes this adjustment, the permit applicant should enter full rated wattage in column 05.*

[2]*Authority Having Jurisdiction may ask for Luminaire cut sheets to confirm wattage used for compliance per 130.0(c) / 160.5(b). Wattage used must be the maximum rated for the luminaire, not the lamp.*

G. MODULAR LIGHTING SYSTEMS

This section does not apply to this project.

H. INDOOR LIGHTING CONTROLS (Not including PAFs)

This table includes lighting controls for conditioned and unconditioned spaces.

Building Level Controls

01	02	03: Field Inspector Pass	Fail
Mandatory Demand Response 110.12(c)	Shut-off controls 130.1(c) / 160.5(b)4C		
NA < 4,000W subject to multilevel	See Area/Space Level Controls	☐	☐

Registration Number: | Generated Date/Time: | Documentation Software: Energy Code Ace
CA Building Energy Efficiency Standards - 2022 Nonresidential Compliance | Report Version: 2022.0.000 Schema Version: rev 20220101 | Compliance ID: 93007-0323-0004 Report Generated: 2023-03-06 08:31:50

STATE OF CALIFORNIA
Indoor Lighting
CALIFORNIA ENERGY COMMISSION

CERTIFICATE OF COMPLIANCE		NRCC-LTI-E
Project Name: AMS PC 24x40 UC Ltg	**Report Page:**	**(Page 4 of 7)**
	Date Prepared:	2023-03-06T11:31:48-05:00

H. INDOOR LIGHTING CONTROLS (Not including PAFs)

Area Level Controls

04	05	06	07	08	09	10	11	12: Field Inspector Pass	Fail
Area Description	Complete Building or Area Category Primary Function Area	Manual Area Controls 130.1(a) / 160.5(b)4A	Multi-Level Controls 130.1(b) / 160.5(b)4B	Shut-Off Controls 130.1(c) // 160.5(b)4C	Primary/Skylit Daylighting 130.1(d) / 160.5(b)4D	Secondary Daylighting 130.1(d) / 160.5(b)4D	Interlocked Systems 140.6(a)1/ 170.2(e)2A		
Restrooms	Restroom	Readily Accessible	NA: Restrooms	Occupancy Sensor	NA: Not daylit zone	NA: Not daylit zone	No	☐	☐
Plumb Chase	Electrical Mechancial Telephone Room	Readily Accessible	NA: General Ltg <= 0.5W/SF	NA: Elec. equip. rm	NA: Not daylit zone	NA: Not daylit zone	No	☐	☐
							13		
					Plan Sheet Showing Daylit Zones:				

I. LIGHTING POWER ALLOWANCE: COMPLETE BUILDING OR AREA CATEGORY METHODS

Each area complying using the Complete Building or Area Category Methods per 140.6(b) are included in this table. Column 06 indicates if additional lighting power allowances per 140.6(c) or adjustments per 140.6(a) are being used .

Unconditioned Spaces

01	02	03	04	05	06	
Area Description	Complete Building or Area Category Primary Function Area	Allowed Density (W/ft^2)	Area (ft^2)	Allowed Wattage (Watts)	Additional Allowance / Adjustment: Area Category	PAF
Restrooms	Restroom	0.65	365	237.25	No	No
Plumb Chase	Electrical Mechancial Telephone Room	0.4	115	46	No	No
		TOTALS:	480	283.25	See Tables J, or P for detail	

J. ADDITIONAL ALLOWANCE: AREA CATEGORY METHOD QUALIFYING LIGHTING SYSTEM

This section does not apply to this project.

Registration Number: | Generated Date/Time: | Documentation Software: Energy Code Ace
CA Building Energy Efficiency Standards - 2022 Nonresidential Compliance | Report Version: 2022.0.000 Schema Version: rev 20220101 | Compliance ID: 93007-0323-0004 Report Generated: 2023-03-06 08:31:50

STATE OF CALIFORNIA
Indoor Lighting
CALIFORNIA ENERGY COMMISSION

CERTIFICATE OF COMPLIANCE		NRCC-LTI-E
Project Name: AMS PC 24x40 UC Ltg	**Report Page:**	**(Page 5 of 7)**
	Date Prepared:	2023-03-06T11:31:48-05:00

K. TAILORED METHOD GENERAL LIGHTING POWER ALLOWANCE

This section does not apply to this project.

L. ADDITIONAL LIGHTING ALLOWANCE: TAILORED WALL DISPLAY

This section does not apply to this project.

M. ADDITIONAL LIGHTING ALLOWANCE: TAILORED FLOOR AND TASK LIGHTING

This section does not apply to this project.

N. ADDITIONAL LIGHTING ALLOWANCE: TAILORED DECORATIVE /SPECIAL EFFECTS

This section does not apply to this project.

O. ADDITIONAL LIGHTING ALLOWANCE: TAILORED VERY VALUABLE MERCHANDISE

This section does not apply to this project.

P. POWER ADJUSTMENT: LIGHTING CONTROL CREDIT (POWER ADJUSTMENT FACTOR (PAF))

This section does not apply to this project.

Q. RATED POWER REDUCTION COMPLIANCE FOR ONE-FOR-ONE ALTERATIONS

This section does not apply to this project.

R. 80% LIGHTING POWER FOR ALL ALTERATIONS - CONTROLS EXCEPTIONS

This section does not apply to this project.

Registration Number: | Generated Date/Time: | Documentation Software: Energy Code Ace
CA Building Energy Efficiency Standards - 2022 Nonresidential Compliance | Report Version: 2022.0.000 Schema Version: rev 20220101 | Compliance ID: 93007-0323-0004 Report Generated: 2023-03-06 08:31:50

STATE OF CALIFORNIA
Indoor Lighting
CALIFORNIA ENERGY COMMISSION

CERTIFICATE OF COMPLIANCE		NRCC-LTI-E
Project Name: AMS PC 24x40 UC Ltg	**Report Page:**	**(Page 6 of 7)**
	Date Prepared:	2023-03-06T11:31:48-05:00

S. DAYLIGHT DESIGN POWER ADJUSTMENT FACTOR (PAF)

This section does not apply to this project.

T. DWELLING UNIT LIGHTING

This section does not apply to this project.

U. DECLARATION OF REQUIRED CERTIFICATES OF INSTALLATION

Form/Title
NRCI-LTI-E - Must be submitted for all buildings

V. DECLARATION OF REQUIRED CERTIFICATES OF ACCEPTANCE

Form/Title	Systems/Spaces To Be Field Verified
NRCA-LTI-02-A - Must be submitted for occupancy sensors and automatic time switch controls.	Restrooms

Registration Number: | Generated Date/Time: | Documentation Software: Energy Code Ace
CA Building Energy Efficiency Standards - 2022 Nonresidential Compliance | Report Version: 2022.0.000 Schema Version: rev 20220101 | Compliance ID: 93007-0323-0004 Report Generated: 2023-03-06 08:31:50

STATE OF CALIFORNIA
Indoor Lighting
CALIFORNIA ENERGY COMMISSION

CERTIFICATE OF COMPLIANCE		NRCC-LTI-E
Project Name: AMS PC 24x40 UC Ltg	**Report Page:**	**(Page 7 of 7)**
	Date Prepared:	2023-03-06T11:31:48-05:00

DOCUMENTATION AUTHOR'S DECLARATION STATEMENT

I certify that this Certificate of Compliance documentation is accurate and complete.

Documentation Author Name: Hans Marsman	Documentation Author Signature:	CEA Registered Energy Efficiency Assessor	Digitally signed by Hans Marsman LEED AP, CEA Date: 2023.03.06 10:34:00-08'00'
Company: Marsman Consulting	Signature Date:		
Address: 1150 J Street #409	CEA/ HERS Certification Identification (if applicable):		
City/State/Zip: San Diego, CA 92101	Phone: (619) 573-6374		

RESPONSIBLE PERSON'S DECLARATION STATEMENT

I certify the following under penalty of perjury, under the laws of the State of California:

1. The information provided on this Certificate of Compliance is true and correct.
2. I am eligible under Division 3 of the Business and Professions Code to accept responsibility for the building design or system design identified on this Certificate of Compliance (responsible designer)
3. The energy features and performance specifications, materials, components, and manufactured devices for the building design or system design identified on this Certificate of Compliance conform to the requirements of Title 24, Part 1 and Part 6 of the California Code of Regulations.
4. The building design features or system design features identified on this Certificate of Compliance are consistent with the information provided on other applicable compliance documents, worksheets, calculations, plans and specifications submitted to the enforcement agency for approval with this building permit application.
5. I will ensure that a completed signed copy of this Certificate of Compliance shall be made available with the building permit(s) issued for the building, and made available to the enforcement agency for all applicable inspections. I understand that a completed signed copy of this Certificate of Compliance is required to be included with the documentation the builder provides to the building owner at occupancy.

Responsible Designer Name: Randall P Cavannagh	Responsible Designer Signature:		
Company: American Modular Systems | Gen7 Schools	Date Signed: 03/04/2023		
Address: 787 Spreckels Avenue	License: C12631		
City/State/Zip: Manteca, CA 95336	Phone: 209.825.1921		

Registration Number: | Generated Date/Time: | Documentation Software: Energy Code Ace
CA Building Energy Efficiency Standards - 2022 Nonresidential Compliance | Report Version: 2022.0.000 Schema Version: rev 20220101 | Compliance ID: 93007-0323-0004 Report Generated: 2023-03-06 08:31:50

STATE OF CALIFORNIA
Outdoor Lighting
CALIFORNIA ENERGY COMMISSION

CERTIFICATE OF COMPLIANCE		NRCC-LTO-E
This document is used to demonstrate compliance with requirements in 110.9, 130.0, 130.2, 140.7, and 141.0(b)2L for outdoor lighting scopes using the prescriptive path for nonresidential and hotel/motel occupancies. It is also used to document compliance with requirements in 160.5, 170.2(e)6, 180.1(a) and 180.2(b)4Bv for outdoor lighting scopes using the prescriptive path for multifamily and mixed-use occupancies. Multifamily includes dormitory and senior living facilities.		
Project Name: AMS PCs Ext Ltg - T24-22	**Report Page:**	**(Page 1 of 7)**
Project Address:	**Date Prepared:**	2023-03-06T10:40:21-05:00

A. GENERAL INFORMATION

01	Project Location (city)	Palmdale	04 Total Illuminated Hardscape Area (ft^2)	0
02	Climate Zone	14		
03	Outdoor Lighting Zone per Title 24 Part 1 10.114 or as designated by Authority Having Jurisdiction (AHJ):			
☐	LZ-0: Very Low - Undeveloped Parkland	☐ LZ-2: Moderate - Urban Clusters	☐ LZ-4: High - Must be reviewed by CA Energy Commission for Approval	
☐	LZ-1: Low - Rural Areas	☒ LZ-3: Moderately High - Urban Areas		
05	Occupancy Types within Project			
● Classroom				

B. PROJECT SCOPE

This table includes outdoor lighting systems that are within the scope of the permit application and are demonstrating compliance using the prescriptive path outlined in 140.7 / 170.2(e)6 or 141.0(b)2L / 180.2(b)4Bv for alterations.

My Project Consists of:

01	02
☒ New Lighting System	Must Comply with Allowances from 140.7 / 170.2(e)6
☐ Altered Lighting System	Is your alteration increasing the connected lighting load (Watts)? ○ Yes ○ No

03	04	05
% of Existing Luminaires Being Altered[1]	Sum Total of Luminaires Being Added or Altered	Calculation Method
☐ < 10% ☐ >= 10% and < 50% ☐ >= 50%		

Please proceed to Table F. Outdoor Lighting Fixture Schedule to define the project's luminaires.

[1] *FOOTNOTES: % of Existing Luminaires Being Altered = (Sum Total of Luminaires Being Added or Altered / Existing Luminaires within the Scope of the Permit Application) x 100.*

Registration Number: | Generated Date/Time: | Documentation Software: Energy Code Ace
CA Building Energy Efficiency Standards - 2022 Nonresidential Compliance | Report Version: 2022.0.000 Schema Version: rev 20220101 | Compliance ID: 92981-0323-0007 Report Generated: 2023-03-06 07:40:22

STATE OF CALIFORNIA
Outdoor Lighting
CALIFORNIA ENERGY COMMISSION

CERTIFICATE OF COMPLIANCE		NRCC-LTO-E
Project Name: AMS PCs Ext Ltg - T24-22	**Report Page:**	**(Page 2 of 7)**
	Date Prepared:	2023-03-06T10:40:21-05:00

C. COMPLIANCE RESULTS

Results in this table are automatically calculated from data input and calculations in Tables F through N. Note: if any cell on this table says "COMPLIES with Exceptional Conditions" refer to Table D. Exceptional Conditions for guidance or see applicable Table referenced below.

Calculations of Total Allowed Lighting Power (Watts) 140.7 / 170.2(e)6 or 141.0(b)2L / 180.2(b)4Bv											Compliance Results		
01	02		03		04		05	06		07	08		09
General Hardscape Allowance 140.7(d)1 / 170.2(e)6 (See Table I)	Per Application 140.7(d)2 / 170.2(e)6 (See Table J)	+	Sales Frontage 140.7(d)2 (See Table K)	+	Ornamental 140.7(d)2 / 170.2(e)6 (See Table L)	+	Per Specific Area 140.7(d)2 / 170.2(e)6 (See Table M)	OR Existing Power Allowance 141.0(b)2L / 180.2(b)4Bv (See Table N)	=	**Total Allowed** (Watts)	≥	**Total Actual** (Watts)	**07 must be >= 08**
0	+ 17	+	---	+	---	+	---	OR ---	=	17	≥	17	COMPLIES
Shielding Compliance (See Table G for Details)													N/A
Controls Compliance (See Table H for Details)													COMPLIES

D. EXCEPTIONAL CONDITIONS

This table is auto-filled with uneditable comments because of selections made or data entered in tables throughout the form.

E. ADDITIONAL REMARKS

This table includes remarks made by the permit applicant to the Authority Having Jurisdiction.

Registration Number: | Generated Date/Time: | Documentation Software: Energy Code Ace
CA Building Energy Efficiency Standards - 2022 Nonresidential Compliance | Report Version: 2022.0.000 Schema Version: rev 20220101 | Compliance ID: 92981-0323-0007 Report Generated: 2023-03-06 07:40:22

IDENTIFICATION STAMP
DIV. OF THE STATE ARCHITECT
APP: 03-124589 INC:
REVIEWED FOR
SS ☑ FLS ☑ ACS ☑
DATE: 04/15/2025

AMS®
American Modular Systems
787 Spreckels Ave., Manteca, CA 95336
Phone (209) 825-1921 Fax (209) 825-7018
www.americanmodular.com

INTELLECTUAL-PROPERTY & PROPRIETARY RIGHTS STATEMENT
COPYRIGHT © AMERICAN MODULAR SYSTEMS (AMS)
AMS OWNS ALL COPYRIGHT AND OTHER INTELLECTUAL PROPERTY AND PROPRIETARY RIGHTS IN THE DOCUMENTS, DRAWINGS, SPECIFICATIONS, AND OTHERWISE, CONTAINED HEREIN. CERTAIN ELEMENTS SHOWN IN THESE DOCUMENTS ARE REGISTERED TRADEMARKS OF AMS. ALL PATENTABLE MATERIALS CONTAINED IN THESE DOCUMENTS AND ORIGINATING WITH AMS WILL REMAIN THE SOLE PROPERTY OF AMS. THESE DRAWING, SPECIFICATIONS AND THE MATERIAL CONTAINED HEREIN MAY NOT BE REPRODUCED, TRANSMITTED, COPIED, DISTRIBUTED, MODIFIED, OR OTHERWISE DISPOSED OF (DIRECTLY OR INDIRECTLY) AND MAY NOT BE USED (IN WHOLE OR IN PART) TO ASSIST IN THE CONSTRUCTION, DESIGN, OR OTHER MAKING OF, OR FOR THE PURPOSE OF FURNISHING ANY INFORMATION FOR THE CONSTRUCTION, DESIGN, OR OTHER MAKING OF, ANY BUILDINGS (MODULAR OR OTHERWISE), DRAWINGS, SPECIFICATIONS, PRINTS, APPARATUS, OR PARTS THEREOF, EXCEPT AS EXPRESSLY PERMITTED BY WRITTEN CONSENT OF, OR IN A WRITTEN AGREEMENT WITH, AMS. SUBMITTAL OR DISTRIBUTION TO MEET OFFICIAL REGULATORY REQUIREMENTS WILL NOT BE CONSTRUED AS PUBLICATION IN DEROGATION OF AMS'S COPYRIGHT OR OTHER INTELLECTUAL-PROPERTY OR PROPRIETARY RIGHTS.

PRE-CHECKED SET NAME
24' x 40' THRU 120' x 40'
STANDARD MODULAR BUILDING
(HIGH SEISMIC)
FORM®

SITE SPECIFIC PROJECT NAME
VENTURA COLLEGE
(1) 72'x40' BUILDING

APPROVED
DIV. OF THE STATE ARCHITECT
APP: 04-122051 PC
REVIEWED FOR
SS ☑ FLS ☑ ACS ☑ CG ☑
DATE: 04/03/2024

☒ 2022 CBC PRE-CHECK (PC) DOCUMENT
A SEPARATE PRELIMINARY APPLICATION FOR CONSTRUCTION IS REQUIRED

MANUFACTURER PROFESSIONAL OF RECORD ON PC

LICENSED ARCHITECT
RANDALL PATRICK CAVANNAGH
No. C12631
Exp. 3-31-25
STATE OF CALIFORNIA

THESE DRAWINGS ARE PRELIMINARY AND NOT FOR CONSTRUCTION UNLESS STAMPED & SIGNED BY THE DESIGN PROFESSIONAL OF RECORD.

REVISIONS
1
2
3
4

DRAWN BY:	AA
SCALE:	AS NOTED
DATE:	MM/DD/YY
PROJECT NO:	XXXX-22

SHEET TITLE:
ENERGY CALCULATIONS SUPPLEMENTAL SHEET

SHEET NUMBER:
EN.94

STATE OF CALIFORNIA
Outdoor Lighting
CALIFORNIA ENERGY COMMISSION

CERTIFICATE OF COMPLIANCE			NRCC-LTO-E
Project Name:	AMS PCs Ext Ltg - T24-22	Report Page:	(Page 3 of 7)
		Date Prepared:	2023-03-06T10:40:21-05:00

F. OUTDOOR LIGHTING FIXTURE SCHEDULE

For new or altered lighting systems demonstrating compliance with 140.7 / 170.2(e)6 all new luminaires being installed and any existing luminaires remaining or being moved within the spaces covered by the permit application are included in the Table below. For altered lighting systems using the Existing Power method per 141.0(b)2I, only new luminaires being installed and replacement luminaires being installed as part of the project scope are included (ie, existing luminaires remaining or existing luminaires being moved are not included). Outdoor lighting attached to multifamily buildings and controlled from the inside of a dwelling unit are included in Table H. and are not included here. All other multifamily outdoor lighting is included here.

Designed Wattage:

01	02		03	04	05	06	07	08	09	10	
Name or Item Tag	Complete Luminaire Description		Watts per luminaire[1, 2]	How is Wattage determined	Total Number Luminaires [2]	Luminaire Status[3]	Excluded per 140.7(a) / 170.2(e)6A	Design Watts	Cutoff Req. > 6,200 initial lumen output 130.2(b) / 160.5(c)1[4]	Field Inspector	
										Pass	Fail
Ext Ltg Fixture @ Door	Lihtonia ARC LED	☐ Linear	17	Mfr. Spec	1	New	☐	17	NA: < 6200 lumens	☐	☐
							Total Design Watts:	17			

* NOTES: Selections with a * require a note in the space below explaining how compliance is achieved.
EX: Luminaire is lighting a statue; EXCEPTION 2 to 130.2(b)

[1]FOOTNOTES: Authority Having Jurisdiction may ask for Luminaire cut sheets to confirm wattage used for compliance per 130.0(c) / 160.5(b)
[2] For linear fixtures, wattage should be indicated as W/ft instead of Watts/luminaire. Total linear feet should be indicated in column 05 instead of number of luminaires.
[3] Select "New" for new luminaires in a new outdoor lighting project, or for added luminaires in an alteration. Select "Altered" for replacement luminaires in an alteration. Select "Existing to Remain" for existing luminaires within the project scope that are not being altered and are remaining. Select "Existing Reinstalled" for existing luminaires which are being removed and reinstalled as part of the project scope.
[4] Compliance with mandatory shielding requirements is required for luminaires with initial lumen output >= 6,200 unless exempted by 130.2(b)/ 160.5(c)

G. SHIELDING REQUIREMENTS (BUG)

This section does not apply to this project.

STATE OF CALIFORNIA
Outdoor Lighting
CALIFORNIA ENERGY COMMISSION

CERTIFICATE OF COMPLIANCE			NRCC-LTO-E
Project Name:	AMS PCs Ext Ltg - T24-22	Report Page:	(Page 4 of 7)
		Date Prepared:	2023-03-06T10:40:21-05:00

H. OUTDOOR LIGHTING CONTROLS

This table demonstrates compliance with controls requirements for all new or altered luminaires installed as part of the permit application. For alteration projects, luminaires which are existing to remain (ie untouched) and luminaires which are removed and reinstalled (wiring only) do not need to be included in this table even if they are within the spaces covered by the permit application.
Outdoor lighting for nonresidential buildings, parking garages and common service areas in multifamily buildings must be documented separately from outdoor lighting attached to multifamily buildings and controlled from the inside of a dwelling unit

Mandatory Controls for Nonresidential Occupancies, Parking Garages & Common Areas In Multifamily Buildings

01	02	03	04	05	
Area Description	Shut-Off 130.2(c)1 / 160.5(c)	Auto-Schedule 130.2(c)2 / 160.5(c)	Motion Sensor 130.2(c)3 / 160.5(c)	Field Inspector	
				Pass	Fail
Entry Door(s): "Ext Ltg Fixture @ Door"	Astronomical Timer	Provided	Provided	☐	☐

[1]FOOTNOTE: Text has been abbreviated, please refer to Table 160.5-A to confirm compliance with the specific light source technologies listed.
[2]Authority having jurisdiction may ask for cutsheets or other documentation to confirm compliance of light source.
[3]Recessed luminaires marked for use in fire-rated installations, and recessed luminaires installed in non-insulated ceilings are excepted from ii and iii.

I. LIGHTING POWER ALLOWANCE (per 140.7 / 170.2(e))

This table includes areas using allowance calculations per 140.7 / 170.2(e). General Hardscape Allowance is per Table 140.7-A/Table 170.2-A while "Use it or lose it" Allowances are per Table 140.7-B /Table 170.2-S. Indicate which allowances are being used to expand sections for user input. Luminaires that qualify for one of the "Use it or lose it" allowances shall not qualify for another "Use it or lose it" allowance.
Outdoor lighting attached to multifamily buildings and controlled from the inside of a dwelling unit are included in Table H. and are not included here. All other multifamily outdoor lighting is included here.

	01			
	"Use it or lose it" Allowance (select all that apply) (select all that apply)			
☐ General Hardscape Allowance Table I (below)	☒ Per Application Table J	☐ Sales Frontage Table K	☐ Ornamental Table L	☐ Per Specific Area Table M

STATE OF CALIFORNIA
Outdoor Lighting
CALIFORNIA ENERGY COMMISSION

CERTIFICATE OF COMPLIANCE			NRCC-LTO-E
Project Name:	AMS PCs Ext Ltg - T24-22	Report Page:	(Page 5 of 7)
		Date Prepared:	2023-03-06T10:40:21-05:00

J. LIGHTING ALLOWANCE: PER APPLICATION

This table includes areas using the wattage allowance per application from Table 140.7-B / Table 170.2-S.

01	02	03	04	05	06	07	08	09	10
Area Description	Application per Table 140.7-B[1]	CALCULATED ALLOWANCE (Watts)			DESIGN WATTS				Additional Allowance (Watts)
		# of Locations	Allowance per Location[2]	Extra Allowance (Watts)	Luminaire Name or Item Tag	Watts per Luminaire	# of Luminaires	Design Watts	
Entry Door(s)	Building Entrance/Exit	1	19	19	Ext Ltg Fixture @ Door	17	1	17	17
					Total Design Watts for this Area:			17	
					Total Allowance (Watts) All Areas:				17

[1] FOOTNOTES: Primary entrance applications are only available for senior care facilities, healthcare facilities, police stations, hospitals, fire stations, and emergency vehicle facilities.
[2] The Allowance per Location for ATMs is 100W for the first ATM and 35W for each additional per Table 140.7-B / Table 170.2-S.
[3] For luminaires indicated in Table F as linear, wattage in column 07 is W/ft instead of Watts/luminaire. Total linear feet should be indicated in column 08 instead of number of luminaires.

K. LIGHTING ALLOWANCE: SALES FRONTAGE

This section does not apply to this project.

L. LIGHTING ALLOWANCE: ORNAMENTAL

This section does not apply to this project.

M. LIGHTING ALLOWANCE: PER SPECIFIC AREA

This section does not apply to this project.

N. EXISTING CONDITIONS POWER ALLOWANCE (alterations only)

This section does not apply to this project.

STATE OF CALIFORNIA
Outdoor Lighting
CALIFORNIA ENERGY COMMISSION

CERTIFICATE OF COMPLIANCE			NRCC-LTO-E
Project Name:	AMS PCs Ext Ltg - T24-22	Report Page:	(Page 7 of 7)
Project Address:		Date Prepared:	2023-03-06T10:40:21-05:00

O. DECLARATION OF REQUIRED CERTIFICATES OF INSTALLATION

Form/Title
NRCI-LTO-E - Must be submitted for all buildings

P. DECLARATION OF REQUIRED CERTIFICATES OF ACCEPTANCE

Form/Title	Systems/Spaces To Be Field Verified
NRCA-LTO-02-A - Must be submitted for all outdoor lighting controls except for alterations where controls are added to <= 20 luminaires.	Entry Door(s): "Ext Ltg Fixture @ Door"

DOCUMENTATION AUTHOR'S DECLARATION STATEMENT

I certify that this Certificate of Compliance documentation is accurate and complete.

Documentation Author Name: Hans Marsman		Documentation Author Signature:	Digitally signed by Hans Marsman, LEED AP, CEA Date: 2023.03.06 09:51:37 -08'00'
Company:	Marsman Consulting	Signature Date:	
Address:	1150 J Street #409	CEA/ HERS Certification Identification (if applicable):	
City/State/Zip:	San Diego, CA 92101	Phone: (619) 573-6374	

RESPONSIBLE PERSON'S DECLARATION STATEMENT

I certify the following under penalty of perjury, under the laws of the State of California:
1. The information provided on this Certificate of Compliance is true and correct.
2. I am eligible under Division 3 of the Business and Professions Code to accept responsibility for the building design or system design identified on this Certificate of Compliance (responsible designer)
3. The energy features and performance specifications, materials, components, and manufactured devices for the building design or system design identified on this Certificate of Compliance conform to the requirements of Title 24, Part 1 and Part 6 of the California Code of Regulations.
4. The building design features or system design features identified on this Certificate of Compliance are consistent with the information provided on other applicable compliance documents, worksheets, calculations, plans and specifications submitted to the enforcement agency for approval with this building permit application.
5. I will ensure that a completed signed copy of this Certificate of Compliance shall be made available with the building permit(s) issued for the building, and made available to the enforcement agency for all applicable inspections. I understand that a completed signed copy of this Certificate of Compliance is required to be included with the documentation the builder provides to the building owner at occupancy.

Responsible Designer Name:	Randall P Cavannagh	Responsible Designer Signature:	
Company:	American Modular Systems i Gen7 Schools	Date Signed:	03/04/2025
Address:	787 Spreckels Avenue	License:	C12631
City/State/Zip:	Manteca, CA 95336	Phone:	209.825.1921

STATE OF CALIFORNIA
Domestic Water Heating System
CALIFORNIA ENERGY COMMISSION

CERTIFICATE OF COMPLIANCE			NRCC-PLB-E
Project Name:	AMS PCs Water Heating - T24-22	Report Page:	(Page 1 of 6)
Project Address:		Date Prepared:	2023-03-06T10:41:54-05:00

A. GENERAL INFORMATION

01	Project Location (city)	Palmdale	02	Climate Zone	14
03	Occupancy Types Within Project (select all that apply):				

• Classroom

B. PROJECT SCOPE

This table includes domestic water heating systems that are within the scope of the permit application and are demonstrating compliance using the prescriptive paths outlined in 140.7 / 170.2(d) and 141.0(a)/ 180.1, or 141.0(b)2N / 180.2 for additions or alterations. Solar water heating systems are documented on the NRCC-SAB compliance document. Combined hydronic water heating systems are documented on the NRCC-MCH compliance document.

01	02	03
My project consists of (check all that apply):	System Type[1,2]	System Components
☒ New system (DHW system being installed for the first time in newly constructed building)	Individual System (serving nonresidential spaces)	☒ Equipment ☒ Distribution ☒ Controls
☐ System Alteration (equipment, distribution or controls)		☐ Equipment ☐ Distribution ☐ Controls

[1]FOOTNOTES: Point of use water heaters, or other non-central systems used to serve nonresidential spaces, are considered individual systems.
[2] Dwelling units refers to hotel/motel guest rooms and units in a multifamily residential occupancy.
[3] DHW systems serving 2 or more dwelling units are considered "Central Systems" for multifamily occupancies

C. COMPLIANCE RESULTS

Table C will indicate if the project data input into the compliance document is compliant with water heating requirements. If this table says "DOES NOT COMPLY" or "COMPLIES with Exceptional Conditions" refer to Table D. or the table indicated as not compliant for guidance.

01	02	03	04
Domestic Hot Water Equipment	Distribution Systems	Controls	Compliance Results
Table F	Table G	Table H	
Yes	Yes	Yes	COMPLIES

D. EXCEPTIONAL CONDITIONS

This table is auto-filled with uneditable comments because of selections made or data entered in tables throughout the form.

STATE OF CALIFORNIA
Domestic Water Heating System
CALIFORNIA ENERGY COMMISSION

CERTIFICATE OF COMPLIANCE			NRCC-PLB-E
Project Name:	AMS PCs Water Heating - T24-22	Report Page:	(Page 2 of 6)
		Date Prepared:	2023-03-06T10:41:54-05:00

E. ADDITIONAL REMARKS

This table includes remarks made by the permit applicant to the Authority Having Jurisdiction.

F. DOMESTIC HOT WATER EQUIPMENT

This table is used to demonstrate compliance with mandatory equipment requirements in 110.1 and 110.3. Compliance with prescriptive requirements in 140.5(c) / 170.2(d) must also be demonstrated and with 141.0 / 180.1/ 180.2 for addition and alteration scopes.

Equipment Schedule: Water Heating Efficiency and Standby Loss

03		04			05		06		
System Name	EWH-1	Exception to 140.5(c)/ 170.2(d)3		Exceptions Do Not Apply	☐	Gas Service Water Heating System >= 1MMBtu/h[1]	Capacity-weighted Average Efficiency %		
07	08	09	10		11	12	13	14	15
Name or Item Tag	Equipment Type	Volume (gal)	Rated Input Capacity (Btu/h)	Max GPM/ First Hour Rating (FHR)	Rated Efficiency	Minimum Efficiency Required	Efficiency Unit	Designed Standby Loss	Maximum Standby Loss
EWH-1	Commercial Electric Storage Water Heater	20	6,824					1.25	1.65

[1]FOOTNOTE: In systems >= 1MMBtu/h with multiple units, gas water heaters with input capacity > 100,000 Btu/h may meet 90% Et requirements via an input capacity-weighted average.

Water Heating Equipment All Occupancies

	Yes	No	Not Applicable	Requirement
18	☒	☐	☐	Unfired storage tank insulation shall have Internal + External >=R-16 OR External >=R-3.5. Label required per 110.3(c)3
19	☐	☐	☒	New state buildings 60% of energy for service water heating from site solar energy or recovered energy per 110.3(c)5
20	☐	☐	☒	Isolation valves for instantaneous water heater with input rating >6.8 kBTUH or 2 kW has been specified per 110.3(c)6
21	☒	☐	☐	School buildings < 25,000 ft² and < 4 stories must install a heat pump water heating system per 140.5(a)1. Water heating systems serving an individual bathroom space may be an instantaneous electric water heater.

STATE OF CALIFORNIA
Domestic Water Heating System
CALIFORNIA ENERGY COMMISSION

CERTIFICATE OF COMPLIANCE			NRCC-PLB-E
Project Name:	AMS PCs Water Heating - T24-22	Report Page:	(Page 3 of 6)
		Date Prepared:	2023-03-06T10:41:54-05:00

G. DOMESTIC HOT WATER DISTRIBUTION SYSTEM

This table is used to demonstrate compliance for nonresidential occupancies with distribution requirements in 120.3 and 140.5. For multifamily and hotel/motel occupancies, compliance is demonstrated with requirements 110.3(c), 160.4, 170.2(d).

Mandatory Pipe Insulation All Occupancies

13	☐	For systems serving dwelling units, pipe insulation must meet the minimum insulation requirements in Table 160.4-A (see blow) except: • Piping that penetrates framing members shall not be required to have pipe insulation for the distance of the framing penetration. Piping that penetrates metal framing shall use grommets, plugs, wrapping or other insulating material to assure that no contact is made with the metal framing. Insulation shall abut securely against all framing members • Piping installed in interior or exterior walls shall not be required to have pipe insulation if all of the requirements are met for compliance with Quality Insulation Installation (QII) as specified in the Reference Residential Appendix RA3.5. • Piping surrounded with a minimum of 1 inch of wall insulation, 2 inches of crawlspace insulation, or 4 inches of attic insulation, shall not be required to have pipe insulation.
14	☐	For systems serving nonresidential spaces, pipe insulation for the following applications is specified to comply with Table 120.3-A (see below) per 120.3: • Recirculating system piping, including supply and return piping of the water heater • The first 8 ft of hot and cold outlet piping, including between storage tank and heat trap, for a nonrecirculating storage system • Pipes that are externally heated
15	☒	Insulation shall be protected from damage, including that due to sunlight, moisture, equipment maintenance, and wind. Insulation exposed to weather shall be installed with a cover suitable for outdoor service per 120.3(b) / 160.4(f). Pipe insulation buried below grade must be installed in a water proof and non-crushable casing or sleeve.

TABLE 120.3-A / 160.4-A PIPE INSULATION THICKNESS

Fluid Temperature Range (°F)	Conductivity Range (Btu-in per hour per ft² per °F)	Insulation Mean Rating Temp (°F)	Nominal Pipe Diameter (in)			
			< 1	1 to < 1.5	1.5 to < 4	1.5 to < 4 Multifamily & Hotel/Motel
			Minimum Insulation Required			
105-140	0.22 - 0.28	100	1.0 in or R-7.7	1.5 in or R-12.5	1.5 in or R-11	2.0 in or R-16

STATE OF CALIFORNIA
Domestic Water Heating System
CALIFORNIA ENERGY COMMISSION

CERTIFICATE OF COMPLIANCE			NRCC-PLB-E
Project Name:	AMS PCs Water Heating - T24-22	Report Page:	(Page 4 of 6)
		Date Prepared:	2023-03-06T10:41:54-05:00

H. DOMESTIC HOT WATER CONTROLS

This table is used to demonstrate compliance with control requirements in 110.3 for all occupancies. For multifamily residential and hotel/motel occupancies, compliance is also demonstrated with requirements in 160.4(e) / 170.2(d).

	Yes	No	Not Applicable	Requirement
01	☒	☐	☐	Construction documents require manufacturer certification that service water-heating systems are equipped with automatic temperature controls capable of adjusting temperature settings per 110.3(a).
02	☐	☐	☒	Systems with capacity > 167,000 BTUH equipped with outlet temperature controls per 110.3(c)1 unless covered by California Plumbing Code 613.0.
03	☐	☐	☒	Controls for circulating pumps or electrical heat trace systems are capable of automatically turning off the system per §110.3(c)2 unless systems serves healthcare facility.
04	☐	☐	☒	For recirculation systems serving multiple dwelling units, design includes automatic pump controls per 170.2(d) or 180.1(b)3 for additions.
05	☐	☐	☒	For recirculation systems serving individual dwelling units, design includes manual on/off controls as specified in Reference Appendix RA4.4.9 per 170.2(d).
06	☐	☐	☒	Combustion air positive shut-off shall be provided per 160.4(3).on all newly installed commercial boilers as follows: • Boilers with input capacity >= 2.5 MMBtu/h, in which the boiler is designed to operate with a nonpositive vent static pressure • Boilers where one stack serves two or more boilers with a total combined input capacity per stack of 2.5 MMBtu/h.
07	☐	☐	☒	Boiler combustion air fans with motor >= 10 hp shall meet one of the following • The fan motor shall be driven by a variable speed drive OR • The fan motor shall include controls that limit the fan motor demand to <=30% of the total design wattage at 50% of the design air volume.
08	☐	☐	☒	Newly installed boilers with an input capacity (dgte/) 5MMBtu/h and a steady state full-load combustion efficiency < 90% shall maintain excess (stack-gas) oxygen concentrations <= 5% by volume on a dry basis over firing rates of 20-100%. Combustion air volume shall be controlled with respect to firing rate or flue gas oxygen concentration. Use of a common gas and combustion air control linkage or jack shaft is prohibited.

I. DECLARATION OF REQUIRED CERTIFICATES OF INSTALLATION

Form/Title
NRCI-PLB-E - Must be submitted for all buildings

IDENTIFICATION STAMP
DIV. OF THE STATE ARCHITECT
APP: 03-124589 INC:
REVIEWED FOR
SS ☑ FLS ☑ ACS ☑
DATE: 04/15/2025

AMS
American Modular Systems
787 Spreckels Ave., Manteca, CA 95336
Phone (209) 825-1921 Fax (209) 825-7018
www.americanmodular.com

INTELLECTUAL-PROPERTY & PROPRIETARY RIGHTS STATEMENT
COPYRIGHT © AMERICAN MODULAR SYSTEMS (AMS)
AMS OWNS ALL COPYRIGHT AND OTHER INTELLECTUAL-PROPERTY AND PROPRIETARY RIGHTS IN THE DOCUMENTS AND DESIGNS PROVIDED TO YOU. NOTHING IN THESE DOCUMENTS CERTAIN ELEMENTS SHOWN IN THESE DOCUMENTS ARE REGISTERED TRADEMARKS OF AMS. ALL PATENTABLE MATERIALS CONTAINED IN THESE DOCUMENTS AND ORIGINATING WITH AMS WILL REMAIN THE SOLE PROPERTY OF AMS. THESE DRAWING, SPECIFICATIONS AND THE MATERIAL CONTAINED HEREIN MAY NOT BE REPRODUCED, TRANSMITTED, COPIED, DISTRIBUTED, MODIFIED, OR OTHERWISE DISPOSED OF (DIRECTLY OR INDIRECTLY) AND MAY NOT BE USED (IN WHOLE OR IN PART) TO ASSIST IN THE CONSTRUCTION, DESIGN, OR OTHER MAKING OF, OR FOR THE PURPOSE OF FURNISHING ANY INFORMATION FOR THE CONSTRUCTION, DESIGN, OR OTHER MAKING OF, ANY BUILDINGS (MODULAR OR OTHERWISE), DRAWINGS, SPECIFICATIONS, PRINTS, APPARATUS, OR PARTS THEREOF, EXCEPT AS EXPRESSLY PERMITTED BY WRITTEN CONSENT OF, OR IN A WRITTEN AGREEMENT WITH, AMS. SUBMITTAL OR DISTRIBUTION TO MEET OFFICIAL REGULATORY REQUIREMENTS WILL NOT BE CONSTRUED AS PUBLICATION IN DEROGATION OF AMS'S COPYRIGHT OR OTHER INTELLECTUAL-PROPERTY OR PROPRIETARY RIGHTS.

PRE-CHECKED SET NAME
24' x 40' THRU 120' x 40'
STANDARD MODULAR BUILDING
(HIGH SEISMIC)
FORM®

SITE SPECIFIC PROJECT NAME
VENTURA COLLEGE
(1) 72'x40' BUILDING

APPROVED
DIV. OF THE STATE ARCHITECT
APP: 04-122051 PC
REVIEWED FOR
SS ☑ FLS ☑ ACS ☑ CG ☑
DATE: 04/03/2024

☒ 2022 CBC PRE-CHECK (PC) DOCUMENT
A SEPARATE PRELIMINARY APPLICATION FOR CONSTRUCTION IS REQUIRED

MANUFACTURER PROFESSIONAL OF RECORD ON PC

LICENSED ARCHITECT
PATRICK CAVANNAGH
No. C12631
Ren. 3-31-25
STATE OF CALIFORNIA

THESE DRAWINGS ARE PRELIMINARY AND NOT FOR CONSTRUCTION UNLESS STAMPED & SIGNED BY THE DESIGN PROFESSIONAL OF RECORD.

REVISIONS
1
2
3
4

DRAWN BY:	AA
SCALE:	AS NOTED
DATE:	MM/DD/YY
PROJECT NO:	XXXX-22

SHEET TITLE:
ENERGY CALCULATIONS SUPPLEMENTAL SHEET

SHEET NUMBER:
EN.95

STATE OF CALIFORNIA

Domestic Water Heating System

CALIFORNIA ENERGY COMMISSION

CERTIFICATE OF COMPLIANCE			NRCC-PLB-E
Project Name:	AMS PCs Water Heating - T24-22	**Report Page:**	(Page 5 of 6)
		Date Prepared:	2023-03-06T10:41:54-05:00

J. DECLARATION OF REQUIRED CERTIFICATES OF ACCEPTANCE
There are no forms required for this project.

K. DECLARATION OF REQUIRED CERTIFICATES OF VERIFICATION
There are no forms required for this project.

STATE OF CALIFORNIA

Domestic Water Heating System

CALIFORNIA ENERGY COMMISSION

CERTIFICATE OF COMPLIANCE			NRCC-PLB-E
Project Name:	AMS PCs Water Heating - T24-22	**Report Page:**	(Page 6 of 6)
Project Address:		**Date Prepared:**	2023-03-06T10:41:54-05:00

DOCUMENTATION AUTHOR'S DECLARATION STATEMENT

I certify that this Certificate of Compliance documentation is accurate and complete.

Documentation Author Name:	Hans Marsman	Documentation Author Signature:	Digitally signed by Hans Marsman, LEED AP, CEA Date: 2023.03.06 09:51:00-06'00'
Company:	Marsman Consulting	Signature Date:	
Address:	1150 J Street #409	CEA/ HERS Certification Identification (if applicable):	
City/State/Zip:	San Diego, CA 92101	Phone:	(619) 573-6374

RESPONSIBLE PERSON'S DECLARATION STATEMENT

I certify the following under penalty of perjury, under the laws of the State of California:

1. The information provided on this Certificate of Compliance is true and correct.
2. I am eligible under Division 3 of the Business and Professions Code to accept responsibility for the building design or system design identified on this Certificate of Compliance (responsible designer)
3. The energy features and performance specifications, materials, components, and manufactured devices for the building design or system design identified on this Certificate of Compliance conform to the requirements of Title 24, Part 1 and Part 6 of the California Code of Regulations.
4. The building design features or system design features identified on this Certificate of Compliance are consistent with the information provided on other applicable compliance documents, worksheets, calculations, plans and specifications submitted to the enforcement agency for approval with this building permit application.
5. I will ensure that a completed signed copy of this Certificate of Compliance shall be made available with the building permit(s) issued for the building, and made available to the enforcement agency for all applicable inspections. I understand that a completed signed copy of this Certificate of Compliance is required to be included with the documentation the builder provides to the building owner at occupancy.

Responsible Designer Name:	Randall P Cavannagh	Responsible Designer Signature:	
Company:	American Modular Systems | Gen7 Schools	Date Signed:	03/04/2023
Address:	787 Spreckels Avenue	License:	C12631
City/State/Zip:	Manteca, CA 95336	Phone:	209.825.1921

CALIFORNIA ENERGY COMMISSION

ELECTRICAL POWER DISTRIBUTION

CEC-NRCC-ELC-E

CERTIFICATE OF COMPLIANCE

This document is used to demonstrate compliance with mandatory requirements in §130.5 for electrical systems in newly constructed nonresidential and hotel/motel occupancies and §160.6 and §160.9 for electrical systems in newly constructed multifamily occupancies. Additions and alterations to electrical service systems in nonresidential & hotel/motel occupancies will also use this document to demonstrate compliance per §141.0(a) or §141.0(b)2P for alterations. For multifamily addition or alterations compliance will be documented per §180.1(a) or §180.2(b)4Bvii.

Project Name:	PC 48'-240'x40'	Enforcement Agency:	DSA
Dwelling Address:	N/A	Permit Number:	N/A
City and Zip Code:	N/A	Permit Application Date:	

A. GENERAL INFORMATION

01	Project Location (city)					02	Climate Zone				
						03	Occupancy Types Within Project:				
☐	Office	☐	Retail	☐	Warehouse	☐	Hotel/ Motel	☒	School	☐	Support Areas
☐	High-Rise Residential Multifamily/ MF Mixed-use >= 4 stories (new construction)	☐	High-Rise Residential Multifamily/ MF Mixed-use >= 4 stories (Addition or Alteration)	☐	Healthcare Facilities	☐	Parking Garage				
				☐	Relocatable	☐	All Others	☐	Theater	☐	Sports Arena
☐	Auditorium	☐	Commercial/ Industrial	☐	Grocery Store	☐	Religious Facility	☐	Data Center	☐	Convention Center
☐	Classroom	☐	Library	☐	Gymnasium	☐	Restaurant/ Commercial Kitchen	☐	Financial Institution	☐	Medical Clinic

CALIFORNIA ENERGY COMMISSION

ELECTRICAL POWER DISTRIBUTION

CEC-NRCC-ELC-E

B. PROJECT SCOPE

This table includes electrical service systems that are within the scope of the permit application.

01	02	03	04	05	06	07
					Demand Response Controls	
Electrical Service Designation/ Description	Scope of Work[1]	Rating[2] (kVA)	Utility Provided Metering System Exception to §130.5(a)/§160.6(a)[3]	System subject to CA Elec Code Article 517 Exception to §130.5(a)&(b)	Where required, demand response controls must be specified which are capable of receiving and automatically responding to at least one standard based messaging protocol which enables demand response after receiving a demand response signal. Sections §120.2/§160.3, §130.1/§160.5 and §130.3/§160.5 and mechanical, indoor lighting, and sign lighting Certificate of Compliance documents-will indicate when demand response controls are required.	Provides power to dwelling units/common living areas only in multifamily occupancy
			☐	☐		☐

[1]FOOTNOTES: Adding only new feeders and branch circuits triggers Voltage Drop 130.5(c)/160.6(c), no other requirements from 130.5/160.6 are required.
[2] If common use areas in a multifamily occupancy are submetered, rating is for submeter size serving common use areas.
[3] Applicable if the utility company is providing a metering system that indicates instantaneous kW demand and kWh for a utility-defined period.

CALIFORNIA ENERGY COMMISSION

ELECTRICAL POWER DISTRIBUTION

CEC-NRCC-ELC-E

C. COMPLIANCE RESULTS

Results in this table are automatically calculated from data input and calculations in Tables F through J.

Note: If any cell on this table says "COMPLIES with Exceptional Conditions" refer to Table D. Exceptional Conditions for guidance or see the applicable Table referenced below.

01		02		03		04		05	06
Service Electrical Metering §130.5(a)/ §160.6(a)	AND	Separation for Monitoring §130.5(b)/ §160.6(b)	AND	Voltage Drop §130.5(c)/ §160.6(c)	AND	Controlled Receptacles §130.5(d)/ §160.6(d)	AND	Electric Ready §160.9	Compliance Results
(See Table F)		(See Table G)		(See Table H)		(See Table I)		(See Table J)	
Yes/No	**AND**	Yes/No	**AND**	Yes/No	**AND**	Yes/No	**AND**	Yes/No	**COMPLIES, DOES NOT COMPLY, Or COMPLIES with Exceptional Conditions**

D. EXCEPTIONAL CONDITIONS

This table is auto-filled with uneditable comments because of selections made or data entered in tables throughout the form.

CALIFORNIA ENERGY COMMISSION

ELECTRICAL POWER DISTRIBUTION

CEC-NRCC-ELC-E

E. ADDITIONAL REMARKS

This table includes remarks made by the installer to the Authority Having Jurisdiction.

F. SERVICE ELECTRICAL METERING

This table includes new or replacement electrical service systems OR equipment to demonstrate compliance with §130.5(a)/§160.6(a). For multifamily occupancies, submetered systems that provide power to common use areas must meet the following metering requirements. Submetered systems providing power to dwelling units do not.

01	02	F. SERVICE ELECTRICAL METERING 03				04	05	
		Required Metering Capabilities per Table 130.5-A					Field Inspector	
Electrical Service Designation/ Description	Rating[1] (kVA)	Instantaneous Demand (kW)	Historical Peak Demand (kW)	Tracking kWh for user-defined period	kWh per rate period	Location of Requirements in Construction Documents	Pass	Fail
		☐	☐	☐	☐		☐	☐
		☐	☐	☐	☐		☐	☐

[1]FOOTNOTES: If common use areas in a multifamily occupancy are submetered, rating is for submeter size serving common use areas.

CALIFORNIA ENERGY COMMISSION

ELECTRICAL POWER DISTRIBUTION

CEC-NRCC-ELC-E

G. SEPARATION OF ELECTRICAL CIRCUITS FOR ENERGY MONITORING

This table includes entirely new or complete replacement electrical power distribution systems to demonstrate compliance with §130.5(b)/§160.6(b). Any load types that are not included in the service do not need to be shown. For multifamily occupancies, submetered systems that provide power to dwelling units do not need to meet these separation requirements and therefore load types on those submetered systems also do not need to be shown.

Electrical Service Designation/ Description:					
01	02	03	04	05	
				Field Inspector	
Load Type per Table 130.5-B[1]	Minimum Required Separation of Load per Table 130.5-B	Compliance Method[2]	Location of Requirements in Construction Documents	Pass	Fail
				☐	☐

NOTES If "Other" is selected under Compliance Method above, please indicate how compliance has been achieved in the space provided below.
[1] FOOTNOTES: For each separate load type, up to 10% of the connected load may be of any type.
[2] Method 1: Switchboards/ motor control centers/ panelboard loads disaggregated for each load type.
Method 2: Switchboards/ motor control centers/ panelboard supply other distribution equipment with loads disaggregated for each load type.
Method 3: Branch circuits serve load types individually & provisions for adding future branch circuit monitoring.
Method 4: Complete metering system measures and reports loads by type.
See Chapter 8 of the Nonresidential Compliance Manual for more detail on Compliance Methods.

CALIFORNIA ENERGY COMMISSION

ELECTRICAL POWER DISTRIBUTION

CEC-NRCC-ELC-E

H. VOLTAGE DROP

This table includes entirely new or complete replacement electrical power distribution systems, or alterations that add, modify or replace both feeders and branch circuits to demonstrate compliance with §130.5(c)/§160.6(c). For alterations, only the altered circuits must demonstrate compliance per §141.0(b)2Piii/§180.2(b) 4Bviic.

NOTES If "Permitted by CA Elec Code" is selected under Compliance Method above, please indicate where the exception applies in the space provided below.

01	02		03	04	05	
					Field Inspector	
Electrical Service Designation/ Description	Combined Voltage Drop on Installed Feeder/Branch Circuit Conductors Compliance Method		Location of Voltage Drop Calculations[1]	Sheet Number for Voltage Drop Calculations in Construction Documents	Pass	Fail
	☐ Voltage drop ≤ 5%	☐ Permitted by CA Elec Code (Exception to §130.5(c))*			☐	☐

[1] FOOTNOTES: Voltage drop calculations may be attached to the permit application outside the construction documents if allowed by the Authority Having Jurisdiction. Select "attached" if applicable. If calculations will be the responsibility of the installing contractor, select "Contractor Responsible".

CALIFORNIA ENERGY COMMISSION

ELECTRICAL POWER DISTRIBUTION

CEC-NRCC-ELC-E

I. CIRCUIT CONTROLS FOR 120-VOLT RECEPTACLES AND CONTROLLED RECEPTACLES

This table includes entirely new or complete replacement electrical power distribution systems to demonstrate compliance with §130.5(d)/§160.6(d). Both controlled and uncontrolled receptacles must be provided in office areas, lobbies, conference rooms, kitchen areas in office spaces, copy rooms and hotel/motel guest rooms.

01	02	03	04	05	06	07	
						Field Inspector	
Room Name or Description	Location/ Type of Controlled Receptacles[1]	Shut-Off Controls	Demand Responsive Controls	Permanent Durable Marking Will be Used	Location of Requirements in Construction Documents	Pass	Fail
				☐		☐	☐

NOTES: If "Other" is selected under Shut-Off Controls above, please indicate how compliance has been achieved in the space provided below.

[1] FOOTNOTES: Receptacles dedicated to refrigerators and water dispensers in kitchens, located a minimum of 6ft above the floor specifically for clocks, network copiers, fax machines, A/V and data equipment other than personal computers in copy rooms, circuits rated more than 20 Amps, or connected to a UPS that are intended to be in continuous use and are marked to differentiate them from other receptacles or circuits are excepted from the requirements.

J. ELECTRIC READY BUILDINGS

This table includes electrical system requirements that must be met when using gas or propane heating, cooking or clothes drying in multifamily occupancies to demonstrate compliance with §160.9.

01	Systems serving multifamily occupancy that use gas or propane include:	☐ Furnaces serving individual dwelling units	☐ Cooktops serving individual dwelling units	☐ Clothes dryers serving individual dwelling units	☐ Clothes dryers in common areas	☐ None of these

IDENTIFICATION STAMP
DIV. OF THE STATE ARCHITECT
APP: 03-124589 INC:
REVIEWED FOR
SS ☑ FLS ☑ ACS ☑
DATE: 04/15/2025

American Modular Systems
787 Spreckels Ave., Manteca, CA 95336
Phone (209) 825-1921 Fax (209) 825-7018
www.americanmodular.com

INTELLECTUAL-PROPERTY & PROPRIETARY RIGHTS STATEMENT
COPYRIGHT © AMERICAN MODULAR SYSTEMS (AMS)
AMS OWNS ALL COPYRIGHT AND OTHER INTELLECTUAL-PROPERTY AND PROPRIETARY RIGHTS IN THESE DRAWINGS, SPECIFICATIONS, AND THE MATERIAL CONTAINED HEREIN. CERTAIN ELEMENTS SHOWN IN THESE DOCUMENTS ARE REGISTERED TRADEMARKS OF AMS. ALL PATENTABLE MATERIALS CONTAINED IN THESE DOCUMENTS AND ORIGINATING WITH AMS WILL REMAIN THE SOLE PROPERTY OF AMS. THESE DRAWING, SPECIFICATIONS, AND THE MATERIAL CONTAINED HEREIN MAY NOT BE REPRODUCED, TRANSMITTED, COPIED, DISTRIBUTED, MODIFIED, OR OTHERWISE DISPOSED OF (DIRECTLY OR INDIRECTLY) AND MAY NOT BE USED (IN WHOLE OR IN PART) TO ASSIST IN THE CONSTRUCTION, DESIGN, OR OTHER MAKING OF, OR FOR THE PURPOSE OF FURNISHING ANY INFORMATION FOR THE CONSTRUCTION, DESIGN, OR OTHER MAKING OF, ANY BUILDINGS (MODULAR OR OTHERWISE), DRAWINGS, SPECIFICATIONS, PRINTS, APPARATUS, OR PARTS THEREOF, EXCEPT AS EXPRESSLY PERMITTED BY WRITTEN CONSENT OF, OR IN A WRITTEN AGREEMENT WITH, AMS. SUBMITTAL OR DISTRIBUTION TO MEET OFFICIAL REGULATORY REQUIREMENTS WILL NOT BE CONSTRUED AS PUBLICATION IN DEROGATION OF AMS'S COPYRIGHT OR OTHER INTELLECTUAL-PROPERTY OR PROPRIETARY RIGHTS.

PRE-CHECKED SET NAME
24' x 40' THRU 120' x 40' STANDARD MODULAR BUILDING (HIGH SEISMIC)
FORM

SITE SPECIFIC PROJECT NAME
VENTURA COLLEGE
(1) 72'x40' BUILDING

APPROVED
DIV. OF THE STATE ARCHITECT
APP: 04-122051 PC
REVIEWED FOR
SS ☑ FLS ☑ ACS ☑ CG ☑
DATE: 04/03/2024

☒ 2022 CBC PRE-CHECK (PC) DOCUMENT
A SEPARATE PROJECT APPLICATION FOR CONSTRUCTION IS REQUIRED.

MANUFACTURER PROFESSIONAL OF RECORD ON PC

LICENSED ARCHITECT
RANDALL PATRICK CAVANAGH
No. C12631
Ren. 3-31-25
STATE OF CALIFORNIA

THESE DRAWINGS ARE PRELIMINARY AND NOT FOR CONSTRUCTION UNLESS STAMPED & SIGNED BY THE DESIGN PROFESSIONAL OF RECORD.

REVISIONS
1
2
3
4

DRAWN BY:	AA
SCALE:	AS NOTED
DATE:	MM/DD/YY
PROJECT NO:	XXXX-22

SHEET TITLE:
ENERGY CALCULATIONS SUPPLEMENTAL SHEET

SHEET NUMBER:
EN.96

ELECTRICAL POWER DISTRIBUTION

CALIFORNIA ENERGY COMMISSION

CEC-NRCC-ELC-E

Gas/ Propane Furnaces Serving Individual Dwelling Units (Heat Pump Space Heater Ready)

	Yes	Requirement
02	☐	A dedicated 240 volt branch circuit shall be installed within 3 feet from the furnace and accessible to the furnace with no obstructions. The branch circuit shall be rated at 30 amps minimum. The blank cover shall be identified as "240V ready". All electrical components shall be installed in accordance with the California Electrical Code.
03	☐	The main electrical service panel shall have a reserved space to allow for the installation of a double pole circuit breaker for a future heat pump space heater installation. The reserved space shall be permanently marked as "For Future 240V use".

Gas/ Propane Cooktops Serving Individual Dwelling Units

	Yes	Requirement
04	☐	A dedicated 240 volt branch circuit shall be installed within 3 feet from the cooktop and accessible to the cooktop with no obstructions. The branch circuit shall be rated at 50 amps minimum. The blank cover shall be identified as "240V ready". All electrical components shall be installed in accordance with the California Electrical Code.
05	☐	The main electrical service panel shall have a reserved space to allow for the installation of a double pole circuit breaker for a future electric cooktop installation. The reserved space shall be permanently marked as "For Future 240V use".

Gas/ Propane Clothes Dryers Serving Individual Dwelling Units

	Yes	Requirement
06	☐	A dedicated 240 volt branch circuit shall be installed within 3 feet from the clothes dryer and accessible to the clothes dryer with no obstructions. The branch circuit shall be rated at 30 amps minimum. The blank cover shall be identified as "240V ready". All electrical components shall be installed in accordance with the California Electrical Code.
07	☐	The main electrical service panel shall have a reserved space to allow for the installation of a double pole circuit breaker for a future electric clothes dryer installation. The reserved space shall be permanently marked as "For Future 240V use".

ELECTRICAL POWER DISTRIBUTION

CALIFORNIA ENERGY COMMISSION

CEC-NRCC-ELC-E

Gas/ Propane Clothes Dryers In Common Areas

	Yes	Requirement
08	☐	Conductors or raceway shall be installed with termination points at the main electrical panel, via subpanels panels if applicable, to a location no more than 3 feet from each gas outlet or a designated location of future electric replacement equipment. Both ends of the conductors or raceway shall be labelled "Future 240V Use." The conductors or raceway and any intervening subpanels, panelboards, switchboards, and busbars shall be sized to meet the future electric power requirements, at the service voltage to the point at which the conductors serving the building connect to the utility distribution system, as specified below. The capacity requirements may be adjusted for demand factors in accordance with the California Electric Code. Gas flow rates shall be determined in accordance with the California Plumbing Code. Capacity shall be one of the following: - 24 amps at 208/240 volts per clothes dryer; - 2.6 kVA for each 10,000 Btu per hour of rated gas input or gas pipe capacity; or - The electrical power required to provide equivalent functionality of the gas-powered equipment as calculated by the responsible person.

K. DECLARATION OF REQUIRED CERTIFICATES OF INSTALLATION

Selections have been made based on information provided in this document. If any selections have been changed by the permit applicant, an explanation should be included in Table E. Additional Remarks. These documents must be provided to the building inspector during construction and can be found online.

YES	NO	Form/Title	Field Inspector Pass	Field Inspector Fail
●	❍	NRCI-ELC-E - Must be submitted for all buildings.	☐	☐

L. DECLARATION OF REQUIRED CERTIFICATES OF ACCEPTANCE

There are no Certificates of Acceptance applicable to electrical power distribution requirements.

ELECTRICAL POWER DISTRIBUTION

CALIFORNIA ENERGY COMMISSION

CEC-NRCC-ELC-E

DOCUMENTATION AUTHOR'S DECLARATION STATEMENT

1. I certify that this Certificate of Compliance documentation is accurate and complete.

Documentation Author Name: JOSE AREVALO	Documentation Author Signature: Jose M Arevalo
Documentation Author Company Name: AMERICAN MODULAR SYSTEMS	Date Signed: 06/30/23
Address: 787 SPRECKELS AVE	CEA Certification Identification (If applicable):
City/State/Zip: MANTECA, CA	Phone: 209-825-1921

RESPONSIBLE PERSON'S DECLARATION STATEMENT

2. I certify the following under penalty of perjury, under the laws of the State of California:
   1. The information provided on this Certificate of Compliance is true and correct.
   2. I am eligible under Division 3 of the Business and Professions Code to accept responsibility for the building design or system design identified on this Certificate of Compliance (responsible designer).
   3. The energy features and performance specifications, materials, components, and manufactured devices for the building design or system design identified on this Certificate of Compliance conform to the requirements of Title 24, Part 1 and Part 6 of the California Code of Regulations.
   4. The building design features or system design features identified on this Certificate of Compliance are consistent with the information provided on other applicable compliance documents, worksheets, calculations, plans and specifications submitted to the enforcement agency for approval with this building permit application.
   5. I understand that a registered copy of this Certificate of Compliance shall be made available with the building permit(s) issued for the building, and made available to the enforcement agency for all applicable inspections, and I will take the necessary steps to accomplish this requirement.
   6. I understand that a registered copy of this Certificate of Compliance is required to be included with the documentation the builder provides to the building owner at occupancy, and I will take the necessary steps to accomplish these requirements.

Responsible Designer Name: Randall Cavanagh	Responsible Designer Signature:
Company: American Modular systems	Date Signed: 6-28-23
Address: 787 Spreckels Avenue	License: C12631
City/State/Zip: Manteca, Ca 95363	Phone: (209)825-1921

For assistance or questions regarding the Energy Standards, contact the Energy Hotline at: 1-800-772-3300

CERTIFICATE OF COMPLIANCE – USER INSTRUCTIONS	NRCC-ELC-E
Electrical Power Distribution	(Page 1 of 3)

A. General Information
1. Enter the City the project is located in.
2. Climate Zone: Select from dropdown.
3. Select the applicable Occupancy Types within the Project.

B. Project Scope
1. Enter the Electrical Service Designation/Description.
2. Scope of Work: Select from dropdown.
3. Enter the kVA Rating.
4. Check if the Utility Provided Metering System meets Exception to §130.5(a)/§160.6(a)3.
5. Check if the System is subject to CA Elec Code Article 517 Exception to §130.5(a)&(b).
6. Demand Response Controls static text.
7. Check if power is provided to dwelling units/common living areas only in a multifamily occupancy.

C. Compliance Results
1. Results in this table are automatically calculated from data input and calculations in Tables F through J.

D. Exceptional Conditions
1. This table is auto-filled with uneditable comments because of selections made or data entered in tables throughout the form.

E. Additional Remarks
1. Enter any notes or comments for the AHJ.

F. Service Electrical Metering
1. This field is filled out automatically.
2. This field is filled out automatically.
3. Instantaneous Demand checkbox is always checked.
   Historical Peak Demand checkbox is checked automatically.
   Tracking kWh for user-defined period checkbox is always checked.
   kWh per rate period is checked automatically.
4. Enter the Location of Requirements in Construction Documents.
5. This is a Pass or Fail checkbox for the field inspector.

CERTIFICATE OF COMPLIANCE – USER INSTRUCTIONS	NRCC-ELC-E
Electrical Power Distribution	(Page 2 of 3)

G. Separation of Electrical Circuits for Energy Monitoring
1. Load Type per Table 130.5-B: Select from dropdown.
2. This field is filled out automatically.
3. Compliance Method: Select from dropdown.
4. Enter the Location of Requirements in the Construction Documents.
5. This is a Pass or Fail checkbox for the field inspector.

H. Voltage Drop
1. This field is filled out automatically.
2. Select the Combined Voltage Drop on Installed Feeder/Branch Circuit Conductors Compliance Method.
3. Location of Voltage Drop Calculation: Select from dropdown.
4. Enter the Sheet Number for Voltage Drop Calculation in Construction Documents.
5. This is a Pass or Fail checkbox for the field inspector.

I. Circuit Controls for 120-Volt Receptacles and Controlled Receptacles
1. Enter the Room Name or Description.
2. Location/Type of Controlled Receptacles: Select from dropdown.
3. Shut-Off Controls: Select from dropdown.
4. Demand Responsive Controls: Select from dropdown.
5. Check if a Permanent Durable Marking Will be Used.
6. Enter the Location of Requirements in the Construction Documents.
7. This is a Pass or Fail checkbox for the field inspector.

J. Electric Ready Buildings
1. Select the applicable systems serving multifamily occupancy that use gas or propane.

2-8. Check Yes to verify your project meets the requirements.

K. Declaration of Required Certificates of Installation
Selections have been automatically made based on information provided in this document. If any selections have been changed by the permit applicant, an explanation should be included in Table E. Additional Remarks.

L. Declaration of Required Certificates of Acceptance

CERTIFICATE OF COMPLIANCE – USER INSTRUCTIONS	NRCC-ELC-E
Electrical Power Distribution	(Page 3 of 3)

Selections have been made based on information provided in this document. If any selections have been changed by the permit applicant, an explanation should be included in Table E. Additional Remarks.

Documentation Declaration Statements
1. The person who prepared the NRCC will sign and complete the fields for their name, company (if applicable), address, phone number, certification information (if applicable), date and signature.
2. The person who is assuming responsibility for the project being built to comply with Title 24, Part 6, will complete the fields for their name, company (if applicable), address, phone number, license number (if applicable), date and signature.

American Modular Systems | Gen7 healthy schools, delivered

April 30, 2023

DSA
Division of the State Architect
5100 Q street
Sacramento, CA 95811

This letter is in regards to the 2022 Energy/CALGreen Code DSA Plan Review, **2022 CBC - AMS PC Submissions.**

American Modular Systems (AMS) shall conform their on-site construction practices to comply with the required construction waste management practices illustrated in the Part 11, Title 24 California Green Building Code (CDC). The intent of this letter is to inform, illustrate, and demonstrate that AMS and its buildings comply to the following applicable code section illustrated below:

2022 California Green Building Code (CGC) – (Part 11, Title 24, CCR)

- ***Section 5.408.1 – Construction Waste Management***
  If the construction waste management takes place in the factory, provide program specifics to CALGreen plan reviewer which identifies:
  1. Percentage of waste to be salvaged or recycled with a minimum of 65% of nonhazardous construction waste.
  2. Procedures for waste management reporting.
  3. Type of waste to be diverted.
  4. If sorted or bulk mixed
  5. If handled by a waste management company or a diversion facility.
  6. If calculated by weight or volume.

AMS shall comply to this section by the following procedure & practice:
1. AMS shall be responsible for the organization and management of construction waste on the factory site, including the responsibility of recycling waste that is a minimum of 65% of non-hazardous construction waste.
2. AMS shall order rental waste & recycling bin(s) from a licensed and authorized waste management company from the City of Manteca, or equivalent in that matter. Upon approval, the bin(s) shall be dropped off on factory site by hired waste management company. As the bin(s) reach full capacity of construction waste, AMS schedules a pick-up for the bin(s) and is given invoice receipts from the waste management company.
3. AMS shall station the bin(s) whereas needed for AMS plant workers to salvage and/or recycle construction waste during the work day. **Each bin is labeled to help sort the different types of construction waste (e.g. Wood, Scrap Metal, Glass, Leather).**
4. AMS plant workers and management are responsible for **sorting** each bin with the correct types of construction waste listed above.
5. The invoice provided by the **hired waste management company** provides a description of the bin(s) and additional information.
6. Invoice receipts provides calculated **weights** of each bin & pricing of rental usage.

The PC plans and specifications will not reflect and show these procedures for any project.
Any questions regarding the construction waste management procedures,
please feel free to contact AMS's office.

Thank you,

Randall P. Cavanagh

LICENSED ARCHITECT RANDALL PATRICK CAVANAGH No. C12631 Ren. 03-31-25 STATE OF CALIFORNIA

American Modular Systems, Inc., 787 Spreckels Ave. Manteca, California 95336, Ph: 209 825 1921 Fax: 209 825 7018
www.americanmodular.com

Page **1** of **1**

IDENTIFICATION STAMP
DIV. OF THE STATE ARCHITECT
APP: 03-124589 INC:
REVIEWED FOR
SS ☑ FLS ☑ ACS ☑
DATE: 04/15/2025

AMS®
American Modular Systems
787 Spreckels Ave., Manteca, CA 95336
Phone (209) 825-1921 Fax (209) 825-7018
www.americanmodular.com

INTELLECTUAL-PROPERTY & PROPRIETARY RIGHTS STATEMENT
COPYRIGHT © AMERICAN MODULAR SYSTEMS (AMS)
AMS OWNS ALL COPYRIGHT AND OTHER INTELLECTUAL-PROPERTY AND PROPRIETARY RIGHTS IN THESE DRAWINGS, SPECIFICATIONS, AND THE MATERIAL CONTAINED HEREIN. CERTAIN ELEMENTS SHOWN IN THESE DOCUMENTS ARE REGISTERED TRADEMARKS OF AMS. ALL PATENTABLE MATERIALS CONTAINED IN THESE DOCUMENTS AND ORIGINATING WITH AMS WILL REMAIN THE SOLE PROPERTY OF AMS. THESE DRAWING, SPECIFICATIONS, AND THE MATERIAL CONTAINED HEREIN MAY NOT BE REPRODUCED, TRANSMITTED, COPIED, DISTRIBUTED, MODIFIED, OR OTHERWISE DISPOSED OF (DIRECTLY OR INDIRECTLY) AND MAY NOT BE USED (IN WHOLE OR IN PART) TO ASSIST IN THE CONSTRUCTION, DESIGN, OR OTHER MAKING OF, OR FOR THE PURPOSE OF FURNISHING ANY INFORMATION FOR THE CONSTRUCTION, DESIGN, OR OTHER MAKING OF, ANY BUILDINGS (MODULAR OR OTHERWISE), DRAWINGS, SPECIFICATIONS, PRINTS, APPARATUS, OR PARTS THEREOF, EXCEPT AS EXPRESSLY PERMITTED BY WRITTEN CONSENT OF, OR IN A WRITTEN AGREEMENT WITH, AMS. SUBMITTAL OR DISTRIBUTION TO MEET OFFICIAL REGULATORY REQUIREMENTS WILL NOT BE CONSTRUED AS PUBLICATION IN DEROGATION OF AMS'S COPYRIGHT OR OTHER INTELLECTUAL-PROPERTY OR PROPRIETARY RIGHTS.

PRE-CHECKED SET NAME
24' x 40' THRU 120' x 40'
STANDARD MODULAR BUILDING
(HIGH SEISMIC)
FORM®

SITE SPECIFIC PROJECT NAME
VENTURA COLLEGE
(1) 72'x40' BUILDING

APPROVED
DIV. OF THE STATE ARCHITECT
APP: 04-122051 PC
REVIEWED FOR
SS ☑ FLS ☑ ACS ☑ CG ☑
DATE: 04/03/2024

☒ 2022 CBC PRE-CHECK (PC) DOCUMENT
A SEPARATE PROJECT APPLICATION FOR CONSTRUCTION IS REQUIRED.

MANUFACTURER PROFESSIONAL OF RECORD ON PC

LICENSED ARCHITECT RANDALL PATRICK CAVANAGH No. C12631 Ren. 3-31-25 STATE OF CALIFORNIA

THESE DRAWINGS ARE PRELIMINARY AND NOT FOR CONSTRUCTION UNLESS STAMPED & SIGNED BY THE DESIGN PROFESSIONAL OF RECORD.

REVISIONS
1
2
3
4

DRAWN BY:	AA
SCALE:	AS NOTED
DATE:	MM/DD/YY
PROJECT NO:	XXXX-22

SHEET TITLE:
ENERGY CALCULATIONS SUPPLEMENTAL SHEET

SHEET NUMBER:
EN.97

. SEE SHEET A1.0-M FOR SITE SPECIFIC SHEET

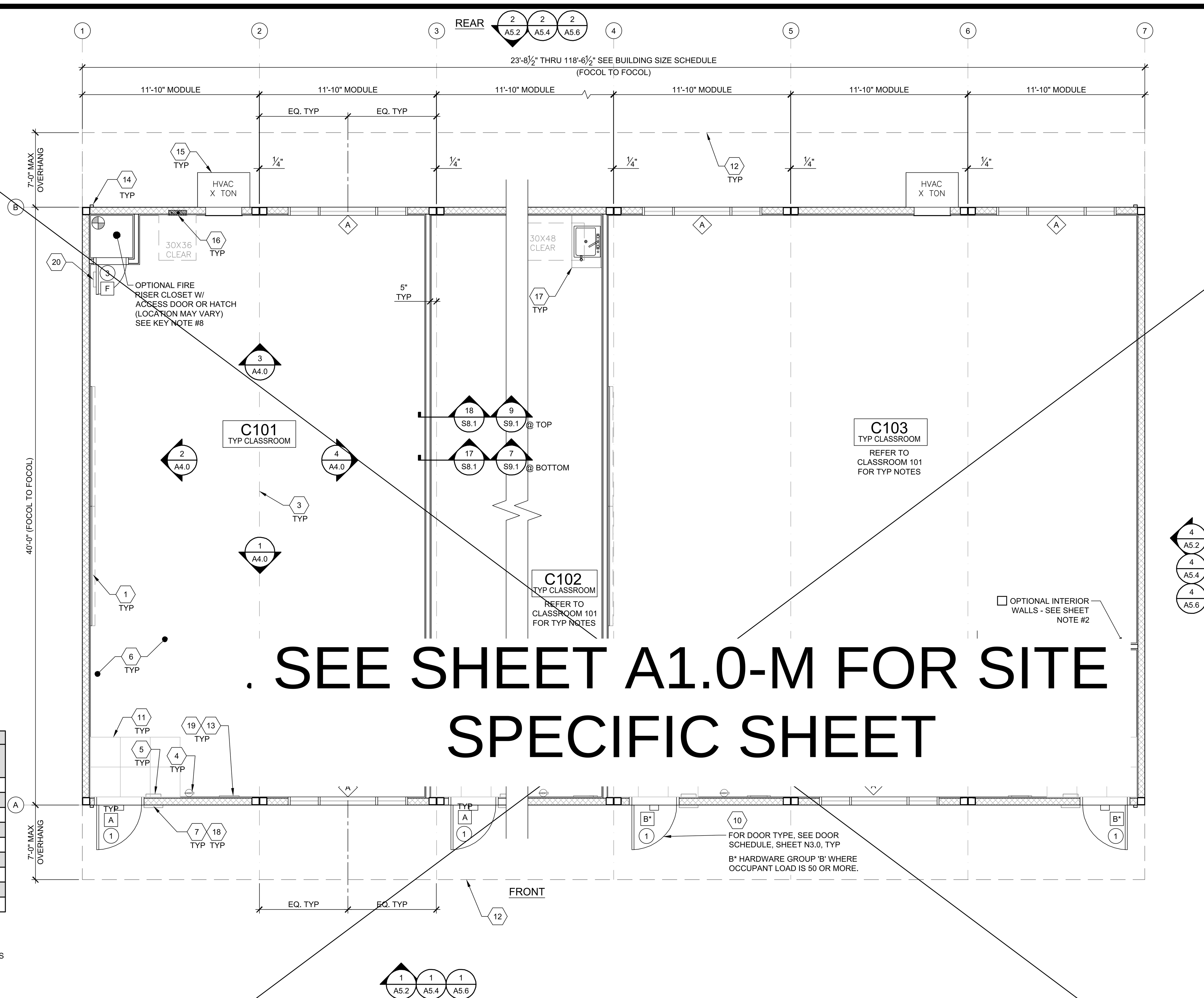

BUILDING SIZE SCHEDULE			
BUILDING SIZE (FT)	TOTAL # OF 12'-0" WIDE MODULES	TOTAL # OF CENTER MODULES	OVERALL BUILDING WIDTH[1]
☐ 24'x40'	2	0	23'-8½"
☐ 36'x40'	3	1	35'-6¾"
☐ 48'x40'	4	2	47'-5"
☐ 60'x40'	5	3	59'-3¼"
☐ 72'x40'	6	4	71'-1½"
☐ 84'x40'	7	5	82'-11¾"
☐ 96'x40'	8	6	94'-10"
☐ 108'x40'	9	7	106'-8¼"
☐ 120'x40'	10	8	118'-6½"

NOTES:

1. TOTAL BUILDING WIDTH INCLUDES 1/4" PER MODULAR CONSTRUCTION TOLERANCE PER FOUNDATION SHEETS S1.0, S1.1, S1.2, & S1.3.

TYPICAL FLOOR PLAN

SCALE: 1/4" = 1'-0" A

1. (2) 8'x4' MARKER BOARDS - SEE SHEET A4.0
2. NOT USED
3. TYP MOD LINE
4. FIRE EXTINGUISHER - TOP OF HANDLE @ +48" A.F.F. 4" MAX PROTRUSION FROM WALL IF BOTTOM OF FIRE EXTINGUISHER IS ABOVE 27" A.F.F. - SEE 19/N4.0
5. TACTILE EXIT SIGN PER DETAIL 10/N4.0 (BY OTHERS)
6. EGRESS AREA
7. ROOM SIGNAGE AND I.S.A. PER DETAILS 5&9/N4.0 (BY OTHERS)
8. OPTIONAL FIRE RISER CLOSET WITH CEILING HEIGHT WALLS AND NO CEILING
9. CARPET
10. EGRESS DOOR
11. NON-ABSORBENT FLOOR AREA (2'-0" MIN. IN ALL DIRECTIONS @ ALL ENTRY DOOR) CHANGES IN LEVEL ARE NOT PERMITTED IN DOOR MANEUVERING CLEARANCE NON-ABSORBENT MATERIAL SHALL BE FLUSH WITH CARPET (11B-404.2.4).
12. OPTIONAL OVERHANG
13. OCCUPANT LOAD SIGN PER DETAIL 11/N4.0 (BY OTHERS)
14. DOWNSPOUT - DISCHARGE TO SPLASH BLOCK (U.O.N.) (QUANTITY AND LOCATION MAY VARY)
15. HVAC - SEE MECHANICAL AND NOTES ON EXTERIOR ELEVATIONS.
16. ELECTRICAL PANEL (LOCATION MAY VARY)
17. CASEWORK WITH SINK - REFER TO 17/-
18. FLOOR LIVE LOAD SIGN PER 2022 CBC SECTION 106.1. *(FLOOR LIVE LOAD SIGN IS REQUIRED ONLY FOR COMMERCIAL OR INSTITUTIONAL BUILDINGS DESIGNED WITH LIVE LOADS EXCEEDING 50 PSF) WHERE 150 PSF LIVE LOAD IS SPECIFIED, THE TEXT "LONG TERM STORAGE NOT PERMITTED" SHALL ALSO BE INCLUDED ON THE SIGN.*
19. ASSISTIVE LISTENING (AL) SIGN POSTED IN PROMINENT PLACE AT OR NEAR THE ENTRANCE PER 17/N4.0.
20. FIRE RISER SIGN ("FIRE SPRINKLER RISER INSIDE") WITH 2" LETTERING WITH 3/8" MIN. STROKE ON THE CONTRASTING BACKGROUND

KEY NOTES

1. REFER TO SHEETS N5.0 AND N5.1 FOR POSSIBLE ADDITIONAL FLOOR PLAN CONFIGURATIONS.
2. OPTIONAL INTERIOR WALLS MAY OCCUR THROUGHOUT THE BUILDING AS CONSTRUCTED PER SHEETS S8.1 OR S9.1. THE PC TITLE 24 HAS BEEN RUN FOR THE WORST CASE ENVELOPE BASED ON AREA.
3. PANIC HARDWARE COMPLYING WITH C.B.C. 1010.2.9 IS REQUIRED TO BE INSTALLED WHEN THE CONFIGURATION OF ANY ROOM PROVIDES AN OCCUPANT LOAD OF 50 OR GREATER.
4. IF OCCUPANCY LOAD EXCEEDS 50, PROVIDE A SECOND EXIT DOOR, PER CBC TABLE 1006.2.1.
5. FOR EVERY ROOM OR SPACE USED FOR ASSEMBLY OR CLASSROOM, PROVIDE AN OCCUPANT LOAD SIGN (BY OTHERS) IN A CONSPICUOUS PLACE, NEAR THE MAIN EXIT, PER C.B.C. SECTION 1004.9.
6. ALL PRIMARY EXTERIOR DOOR ENTRIES SHALL BE COVERED TO PREVENT WATER INTRUSION BY USING NONABSORBENT FLOOR AND WALL FINISHES WITHIN AT LEAST 2 FEET AROUND AND PERPENDICULAR TO OPENING, PER CALGREEN, SECTION 5.407.2.2.1.
7. PRIMARY EXTERIOR DOOR ENTRIES SHALL HAVE AT LEAST ONE OF THE FOLLOWING:
   - INSTALLED AWNING AT LEAST 4 FEET IN DEPTH (BY OTHERS).
   - OPTIONAL SIDE WALL CANOPY (4 FEET IN DEPTH) PER SHEET S5.4A.
   - ROOF OVERHANG AT LEAST 4 FEET IN DEPTH.
   - DOOR RECESSED AT LEAST 4 FEET.
   - OTHER METHODS WHICH PROVIDE EQUIVALENT PROTECTION (BY OTHERS)
8. WINDOW PLACEMENT & SIZE MAY VARY AS THE TITLE 24 MODEL REFLECTS THE LARGEST WINDOW OPTION. NO PC'S TOTAL WINDOW AREA MAY EXCEED THE TOTAL FENESTRATION AREA LISTED IN SECTION G1. ENVELOPE GENERAL INFORMATION OF THE TITLE 24 REPORT.
8. CABINETRY MAY BE INSTALLED ON ONE OR BOTH SIDES OF INTERIOR WALLS AND THE INSIDE FACE OF EXTERIOR WALLS WHEN INSTALLED PER THE DETAIL 8/A7.1.
9. IF FIRE RATED WALLS ARE REQUIRED DUE TO SITE SPECIFIC REQUIREMENTS, REFER TO SHEET A8.0 FOR 1 HOUR RATED DETAILS

SITE NOTE

3/16:12 (1%) MINIMUM TO 1/4:12 (2%) MAXIMUM GRADE FROM FACE OF BUILDING MUST BE ADHERED TO FOR WATER RUN-OFF. PONDING MAY OCCUR AROUND THE PERIMETER OF THE BUILDING.

SHEET NOTES

(NO HATCH)

2X4 WALLS

2X6 WALLS

WALL LEGEND

(X) hexagon = KEY NOTE - SEE KEY NOTES ABOVE

(X) circle = DOOR TYPE - SEE SCHEDULE, SHEET N3.0

[X] = DOOR HARDWARE - SEE HARDWARE SCHEDULE, SHEET N3.0

(X) diamond = WINDOW TYPE - SEE SCHEDULE, SHEET N3.0

SYMBOLS LEGEND

16

IN-ROOM SINK OPTION

BASE CABINET WITH SOLID SURFACE OR PLASTIC LAMINATE COUNTERTOP AND SINK. CABINET SHALL HAVE PLASTIC LAMINATE FINISH.
CABINET WITH SINK SHALL BE ACCESSIBLE - SEE DETAIL 12/P2.0.

FOR SINK HEIGHT & DIMENSIONS, SEE DETAIL 8/P2.0.

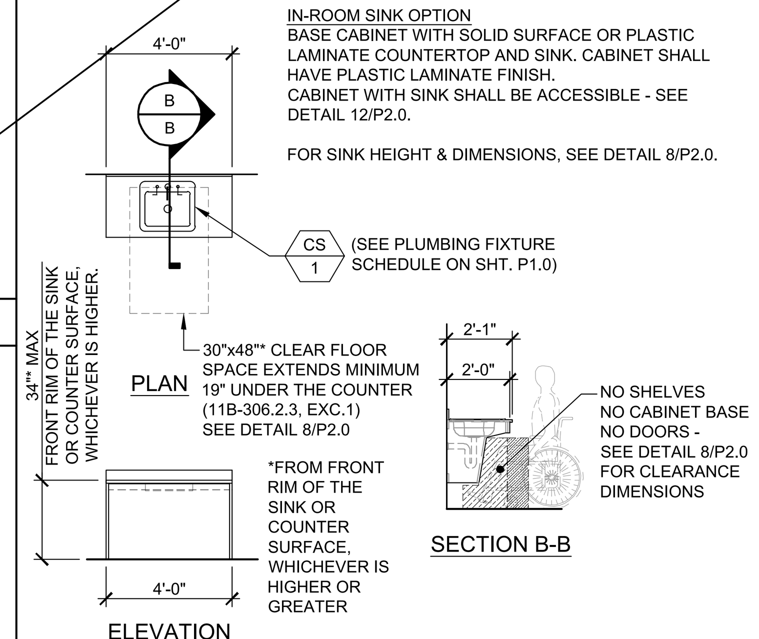

CLASSROOM SINK - OPTIONAL

SCALE: 1/4" = 1'-0" 17

ENERGY CONTROLS

1. DEMAND RESPONSE CONTROLS:
   ONLY REQUIRED IN BUILDINGS LARGER THAN 10,000 S.F., THEREFORE, NOT REQUIRED FOR THIS PC.
2. AUTOMATIC DAYLIGHTING CONTROLS:
   NOT REQUIRED IN ROOMS WHERE COMBINED INSTALLED LIGHTING POWER IN COMBINED SKYLIT & PRIMARY DAYLIT ZONES ARE <120 WATTS. INSTALLED WATTAGE IN PRIMARY SIDELIT DAY LIT ZONE IS 90 WATTS (2x 45w, AS SHOWN ON SHEET E1.0). THEREFORE, AUTOMATIC DAYLIGHTING CONTROLS ARE ONLY REQUIRED WHEN "SOLATUBES" ARE INSTALLED. SEE A1.1
3. ENERGY MANAGEMENT CONTROL SYSTEM (EMCS) CONNECTION:
   PER TITLE 24 CODE, "AN EMCS MAY BE INSTALLED TO COMPLY WITH THE REQUIREMENTS OF ONE OR MORE LIGHTING CONTROLS IF IT MEETS THE MINIMUM REQUIREMENTS". PC MAY CONTAIN OCCUPANCY SENSORS AND PHOTOCELL CONTROL LIGHTING, IN THAT CASE, AN EMCS IS NOT REQUIRED FOR THIS PC.
4. SOLAR-READY ZONE REQUIREMENTS:
   REQUIREMENTS & TABLE CAN BE FOUND ON SHEET A2.0

NOTE:
ANY MONITORING EQUIPMENT OR ASSOCIATED SENSORS ARE SITE SPECIFIC AND ARE NOT INCLUDED IN THE BASE PC.

ENERGY NOTES

ACOUSTIC CONTROLS

1. WHEN THE PRE-CHECK (PC) BUILDING IS SITE ADAPTED, THE BUILDING AND SITE FEATURES SHALL COMPLY WITH THE CALGREEN CODE, SECTION 5.507.4, FOR THE SPECIFIC SITE LOCATION.
2. MINIMUM WALL ASSEMBLIES:
   WALL ASSEMBLIES SHALL BE CONSTRUCTED PER DETAIL SHEETS A5.3, A5.5, A5.7, & A8.0, WITH EITHER 2x4 WOOD STUDS OR 6" STEEL STUDS PER LISTED OPTIONS.
   MINIMUM STC RATINGS LISTED BELOW ARE PER THE CATALOG OF STC & IIC RATINGS FOR WALL AND FLOOR/CEILING ASSEMBLIES, PRODUCED BY THE OFFICE OF NOISE CONTROL, CA DEPARTMENT OF HEALTH SERVICES.

(1) LAYER 1/2" GYPSUM BOARD SECURED TO MIN. 2x4 STUDS @ 16" O.C. MAX.

STC=28
(CATALOG SECTION 1.2.1.5.4.1)
TEST REF.: NATIONAL RESEARCH COUNCIL OF CANADA - NRC #66

(1) LAYER 1/2" GYPSUM BOARD SECURED TO MIN. 2½" METAL STUDS @ 24" O.C. MAX.

STC=27
(CATALOG SECTION 1.3.2.5.4.1)
TEST REF.: NATIONAL RESEARCH COUNCIL OF CANADA - NRC #66

3. IN THE EVENT THAT A PC CLASSROOM IS DESIGNED TO CONNECT TO ANOTHER PC CLASSROOM OR RESTROOM, INTERIOR SOUND TRANSMISSION IN THE INTERIOR ADJOINING WALL AND FLOOR/CEILING SHALL MEET THE MINIMUM REQUIREMENT OF A STC OF 40, PER CALGREEN CODE SECTION 507.4.3. (EXAMPLES OF QUALIFYING ASSEMBLIES SHOWN BELOW).

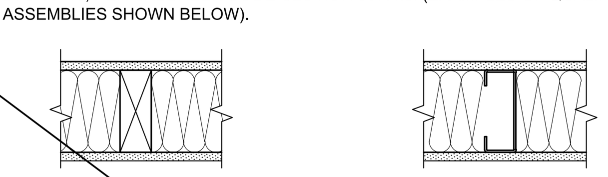

(2) LAYER 5/8" GYPSUM BOARD SECURED TO MIN. 2x4 STUDS @ 24" O.C. MAX. w/ 3½" THK. BATT INSULATION

STC=40
TEST REF.: AUDIO ALLOY L.L.C TEST NUMBER: OL-05-1003

(2) LAYER 5/8" GYPSUM BOARD SECURED TO MIN. 2½" METAL STUDS @ 24" O.C. MAX. W/3½ THK BATT INSULATION

STC=48
TEST REF.: AUDIO ALLOY L.L.C TEST NUMBER OL-92-410

4. MINIMUM WINDOW & DOOR RATINGS:
   ALL WINDOWS AND DOORS SPECIFIED ON THE SCHEDULES FOUND ON SHEET N3.0 OF THIS PACKAGE SHALL MEET A MINIMUM STC RATING OF 27.

ACOUSTIC NOTES

IDENTIFICATION STAMP
DIV. OF THE STATE ARCHITECT
APP: 03-124589 INC:
REVIEWED FOR
SS ☑ FLS ☑ ACS ☑
DATE: 04/15/2025

AMS®
American Modular Systems
787 Spreckels Ave., Manteca, CA 95336
Phone (209) 825-1921 Fax (209) 825-7018
www.americanmodular.com

INTELLECTUAL-PROPERTY & PROPRIETARY RIGHTS STATEMENT
COPYRIGHT © AMERICAN MODULAR SYSTEMS (AMS)
AMS OWNS ALL COPYRIGHT AND OTHER INTELLECTUAL-PROPERTY AND PROPRIETARY RIGHTS IN THESE DRAWINGS, SPECIFICATIONS, AND THE MATERIAL CONTAINED HEREIN. CERTAIN ELEMENTS SHOWN IN THESE DOCUMENTS ARE REGISTERED TRADEMARKS OF AMS. ALL PATENTABLE MATERIALS CONTAINED IN THESE DOCUMENTS AND ORIGINATING WITH AMS WILL REMAIN THE SOLE PROPERTY OF AMS. THESE DRAWING, SPECIFICATIONS, AND THE MATERIAL CONTAINED HEREIN MAY NOT BE REPRODUCED, TRANSMITTED, COPIED, DISTRIBUTED, MODIFIED, OR OTHERWISE DISPOSED OF (DIRECTLY OR INDIRECTLY) AND MAY NOT BE USED (IN WHOLE OR IN PART) TO ASSIST IN THE CONSTRUCTION, DESIGN, OR OTHER MAKING OF, OR FOR THE PURPOSE OF FURNISHING ANY INFORMATION FOR THE CONSTRUCTION, DESIGN, OR OTHER MAKING OF, ANY BUILDINGS (MODULAR OR OTHERWISE), DRAWINGS, SPECIFICATIONS, PRINTS, APPARATUS, OR PARTS THEREOF, EXCEPT AS EXPRESSLY PERMITTED BY WRITTEN CONSENT OF, OR IN A WRITTEN AGREEMENT WITH, AMS. SUBMITTAL OR DISTRIBUTION TO MEET OFFICIAL REGULATORY REQUIREMENTS WILL NOT BE CONSTRUED AS PUBLICATION IN DEROGATION OF AMS'S COPYRIGHT OR OTHER INTELLECTUAL-PROPERTY OR PROPRIETARY RIGHTS.

PRE-CHECKED SET NAME
24' x 40' THRU 120' x 40'
STANDARD MODULAR BUILDING
(HIGH SEISMIC)
FORM®

SITE SPECIFIC PROJECT NAME
.
.
.

APPROVED
DIV. OF THE STATE ARCHITECT
APP: 04-122051 PC
REVIEWED FOR
SS ☑ FLS ☑ ACS ☑ CG ☑
DATE: 04/03/2024

☐ 2022 CBC PRE-CHECK (PC) DOCUMENT
A SEPARATE PROJECT APPLICATION FOR CONSTRUCTION IS REQUIRED.

MANUFACTURER PROFESSIONAL OF RECORD ON PC

LICENSED ARCHITECT
RANDALL PATRICK CAVANAGH
No. C12631
Ren. 3-31-25
STATE OF CALIFORNIA

THESE DRAWINGS ARE PRELIMINARY AND NOT FOR CONSTRUCTION UNLESS STAMPED & SIGNED BY THE DESIGN PROFESSIONAL OF RECORD.

REVISIONS
1
2
3
4

DRAWN BY:	AA
SCALE:	AS NOTED
DATE:	MM/DD/YY
PROJECT NO:	XXXX-22

SHEET TITLE:
TYPICAL
FLOOR PLAN

SHEET NUMBER:
A1.0

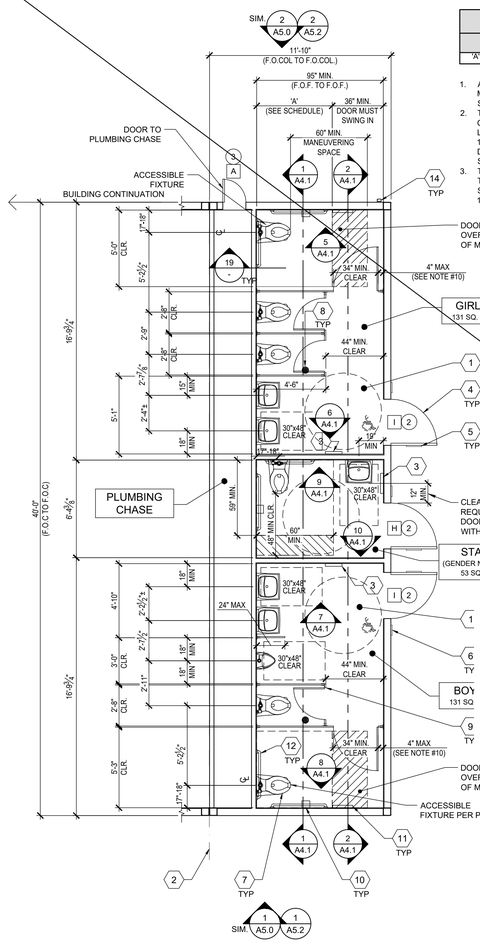

ACCESSIBLE CLEARANCE FOR WATER CLOSETS		WALL MOUNTED	FLOOR MOUNTED
'A'	ADULT	56" MIN.	59" MIN.

1. ACCESSIBLE TOILET COMPARTMENT'S SHALL HAVE A MANEUVERING SPACE COMPLYING WITH 2022 CBC SECTION 11B-604.8.1.1.
2. THE TABLE ABOVE IS A LIST OF REQ'D WATER CLOSET CLEARANCE. THE W.C. MANEUVERING SPACE IS LOCATED IN FRONT OF THE W.C. AND IS DESCRIBED IN 11B-604.8.1.1.1, 11B-604.8.1.1.2 AND 11B-604.8.1.1.3 DEPENDING ON IF THE DOOR IS END-OPENING OR SIDE-OPENING AND DIRECTION OF SWING.
3. THE MANEUVERING CLEARANCE FOR ALL ACCESSIBLE TOILET COMPARTMENTS SHOWN IN THESE PLANS SHALL COMPLY WITH 11B-604.8.1.1.1 (IN-SWINGING) & 11B-604.8.1.1.2. (SIDE-OPENING)

BOYS, GIRLS & STAFF RESTROOM FLOOR PLAN OPTION — A
AGE RANGE: 13-ADULT — SCALE: 1/4" = 1'-0"

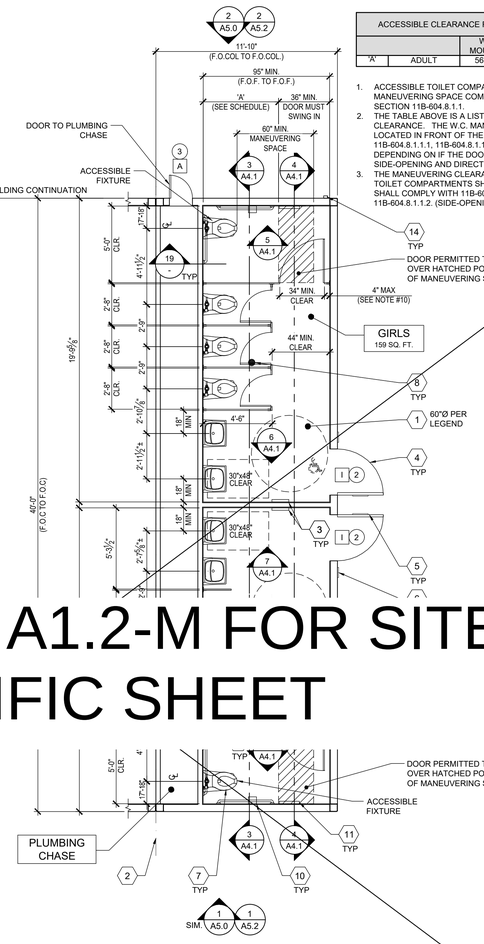

ACCESSIBLE CLEARANCE FOR WATER CLOSETS		WALL MOUNTED	FLOOR MOUNTED
'A'	ADULT	56" MIN.	59" MIN.

1. ACCESSIBLE TOILET COMPARTMENT'S SHALL HAVE A MANEUVERING SPACE COMPLYING WITH 2022 CBC SECTION 11B-604.8.1.1.
2. THE TABLE ABOVE IS A LIST OF REQ'D WATER CLOSET CLEARANCE. THE W.C. MANEUVERING SPACE IS LOCATED IN FRONT OF THE W.C. AND IS DESCRIBED IN 11B-604.8.1.1.1, 11B-604.8.1.1.2 AND 11B-604.8.1.1.3 DEPENDING ON IF THE DOOR IS END-OPENING OR SIDE-OPENING AND DIRECTION OF SWING.
3. THE MANEUVERING CLEARANCE FOR ALL ACCESSIBLE TOILET COMPARTMENTS SHOWN IN THESE PLANS SHALL COMPLY WITH 11B-604.8.1.1.1 (IN-SWINGING) & 11B-604.8.1.1.2. (SIDE-OPENING)

BOYS & GIRLS RESTROOM FLOOR PLAN OPTION — B
AGE RANGE: 13-ADULT — SCALE: 1/4" = 1'-0"

SEE SHEET A1.2-M FOR SITE SPECIFIC SHEET

1. CLEAR FLOOR SPACE AREA
2. TYP. MOD LINE
3. PAPER TOWEL OR HAND DRYER (BY OTHERS) MAXIMUM PROJECTION 4" INTO PATH OF TRAVEL AND SHALL NOT ENCROACH THE LAV CLEAR FLOOR SPACE
4. DOOR PER SCHEDULE ON SHEET N3.0, TYP.
5. RESTROOM SIGNAGE (BY OTHERS) PER DETAILS 1/9, SHEET N4.0
6. ROOM AND ISA SIGNAGE (BY OTHERS) PER DETAILS 5&9/N4.0
7. PLUMBING FIXTURE PER P1.0
8. FLOOR DRAIN (LOCATION MAY VARY) - PER P1.0. 1:48 FLOOR SLOPE MAX
9. TOILET PARTITIONS (ACCURATE, SOLID PLASTIC, OR EQUAL)
10. TOILET TISSUE DISPENSER PER ACCESSIBLE HEIGHTS TABLE 10/P2.0
11. TOILET-SEAT COVER DISPENSER PER P1.0 (BRADLEY MODEL 508-32, OR EQUAL)
12. GRAB BARS - SEE 6/A7.1
13. NOT USED
14. DOWNSPOUT - DISCHARGE TO SPLASH BLOCK (U.N.O.) (QUANTITY AND LOCATION MAY VARY)

KEY NOTES

1. DIMENSIONS ARE TO FACE OF FINISH (F.O.F.) UNLESS NOTED OTHERWISE (i.e. F.O.C., ℄)
2. RESTROOM CONFIGURATION MAY VARY PER BUILDING CONFIGURATION.
3. RESTROOM MODULE OCCURS ONLY AT END OF BUILDING. SINGLE RESTROOMS MAY OCCUR IN ANY PART OF A BUILDING.
4. RESTROOM MODULE CANNOT STAND ALONE AND SHALL BE ASSEMBLED TOGETHER WITH AT LEAST ONE OTHER MODULE OF THE SAME SIZE.
5. INTERIOR WALLS MAY OCCUR THROUGHOUT BUILDING. REFER TO SHEET S8.1 FOR ATTACHMENTS.
6. REFER TO SCHEDULE 10/P2.0 FOR ACCESSIBLE HEIGHTS & DIMENSIONS.
7. REFER TO DETAILS 3, 4 & 5, SHEET A7.1 FOR TOILET PARTITION ANCHORAGE BLOCKING.
8. SEWER AND WATER STUB OUTS SHALL BE LOCATED WITHIN THE ALLOWABLE AREA AS SHOWN ON FLOOR PLAN AND CONNECTIONS SHALL BE EASILY ACCESSIBLE FOR FUTURE RELOCATION. STUB OUT HEIGHT SHALL BE COORDINATED BY THE MANUFACTURER.
9. PIPING MATERIAL
   a. WATER: COPPER TYPE "L", 95/5 SOLDER.
   b. WASTE DRAIN AND VENT: ABS.
10. TOILET COMPARTMENT DOORS LOCATED IN THE SIDE WALL OR PARTITION, THE DOOR OPENING SHALL BE 4 INCHES (102MM) MAXIMUM FROM THE FRONT PARTITION, PER C.B.C. SECTION 11B-604.8.1.2.
11. ALL RESTROOM AND SINK ACCESSORIES NOT SHOWN HERE MUST BE COORDINATED BY THE PROJECT AOR/DISTRICT BEFORE SUBMITTING SITE-SPECIFIC PLANS TO DSA FOR REVIEW.

PLUMBING NOTE

MODULAR MFR. TO STUB THROUGH FLOOR ALL PLUMBING LINES. BUILDING PERIMETER POC'S SHOWN ARE FOR COORDINATION PURPOSES ONLY. ALL UNDER-FLOOR CONNECTIONS ARE BY SITE CONTRACTOR, U.O.N.

SITE NOTE

3/16:12 (1%) MINIMUM TO 1/4:12 (2%) MAXIMUM GRADE FROM FACE OF BUILDING MUST BE ADHERED TO FOR WATER RUN-OFF. PONDING MAY OCCUR AROUND THE PERIMETER OF THE BUILDING.

GENERAL NOTES

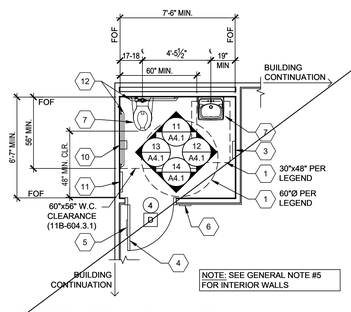

(THIS RESTROOM OPTION CAN OCCUR ANYWHERE IN THE BUILDING)

SINGLE TOILET PLAN - FRONT WALL APPROACH — 16
AGE RANGE: 13-ADULT — SCALE: 1/4" = 1'-0"

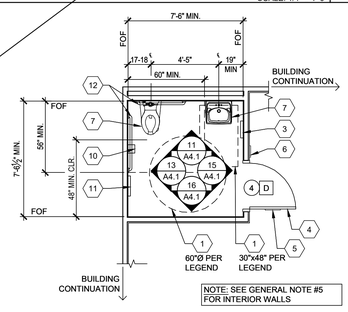

(THIS RESTROOM OPTION CAN OCCUR ANYWHERE IN THE BUILDING)

SINGLE TOILET PLAN - SIDE WALL APPROACH — 17
AGE RANGE: 13-ADULT — SCALE: 1/4" = 1'-0"

IF WATER HEATER IS MOUNTED ABOVE CIRCULATION AREA, BOTTOM EDGE OF MOUNT AND EQUIPMENT SHALL BE MIN. +80" PER 11B-307. (CLARIFY WHEN OPTIONAL MOUNT IS REQUIRED)

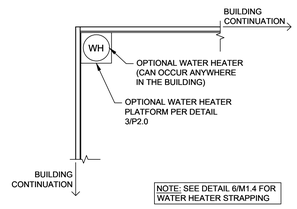

OPTIONAL WATER HEATER — 18
SCALE: 1/4" = 1'-0"

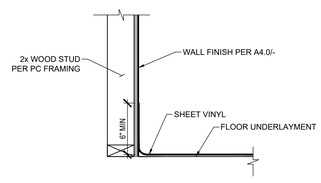

PROTECTION OF WOOD WALLS @ TOILET ROOMS — 19
SCALE: 1/4" = 1'-0"

- 1 = KEY NOTE - SEE KEY NOTES, THIS SHEET
- X = DOOR TYPE - SEE SCHEDULE SHEET N3.0
- X = DOOR HARDWARE - SEE HARDWARE SCHEDULE SHEET N3.0
- X = WINDOW TYPE - SEE SCHEDULE SHEET N3.0
- = 60" DIAMETER CLEAR FLOOR TURNING SPACE
- = 30"x48" CLEAR FLOOR SPACE

SYMBOLS LEGEND — 20
SCALE: 1/4" = 1'-0"

IDENTIFICATION STAMP
DIV. OF THE STATE ARCHITECT
APP: 03-124589 INC:
REVIEWED FOR
SS ☑ FLS ☑ ACS ☑
DATE: 04/15/2025

AMS®
American Modular Systems
787 Spreckels Ave., Manteca, CA 95336
Phone (209) 825-1921 Fax (209) 825-7018
www.americanmodular.com

INTELLECTUAL-PROPERTY & PROPRIETARY RIGHTS STATEMENT
COPYRIGHT © AMERICAN MODULAR SYSTEMS (AMS)
AMS OWNS ALL COPYRIGHT AND OTHER INTELLECTUAL-PROPERTY AND PROPRIETARY RIGHTS IN THESE DRAWINGS, SPECIFICATIONS, AND THE MATERIAL CONTAINED HEREIN. CERTAIN ELEMENTS SHOWN IN THESE DOCUMENTS ARE REGISTERED TRADEMARKS OF AMS. ALL PATENTABLE MATERIALS CONTAINED IN THESE DOCUMENTS AND ORIGINATING WITH AMS WILL REMAIN THE SOLE PROPERTY OF AMS. THESE DRAWINGS, SPECIFICATIONS, AND THE MATERIAL CONTAINED HEREIN MAY NOT BE REPRODUCED, TRANSMITTED, COPIED, DISTRIBUTED, MODIFIED, OR OTHERWISE DISPOSED OF (DIRECTLY OR INDIRECTLY) AND MAY NOT BE USED (IN WHOLE OR IN PART) TO ASSIST IN THE CONSTRUCTION, DESIGN, OR OTHER MAKING OF, OR FOR THE PURPOSE OF FURNISHING ANY INFORMATION FOR THE CONSTRUCTION, DESIGN, OR OTHER MAKING OF, ANY BUILDINGS (MODULAR OR OTHERWISE), DRAWINGS, SPECIFICATIONS, PRINTS, APPARATUS, OR PARTS THEREOF, EXCEPT AS EXPRESSLY PERMITTED BY WRITTEN CONSENT OF, OR IN A WRITTEN AGREEMENT WITH, AMS. SUBMITTAL OR DISTRIBUTION TO MEET OFFICIAL REGULATORY REQUIREMENTS WILL NOT BE CONSTRUED AS PUBLICATION IN DEROGATION OF AMS'S COPYRIGHT OR OTHER INTELLECTUAL-PROPERTY OR PROPRIETARY RIGHTS.

PRE-CHECKED SET NAME
24' x 40' THRU 120' x 40'
STANDARD MODULAR BUILDING
(HIGH SEISMIC)
FORM®

SITE SPECIFIC PROJECT NAME

APPROVED
DIV. OF THE STATE ARCHITECT
APP: 04-122051_PC
REVIEWED FOR
SS ☑ FLS ☑ ACS ☑ CG ☑
DATE: 04/03/2024

☐ 2022 CBC PRE-CHECK (PC) DOCUMENT
A SEPARATE PRE-SITE AND FOUNDATION CONSTRUCTION IS REQUIRED.

MANUFACTURER PROFESSIONAL OF RECORD ON PC

LICENSED ARCHITECT — PATRICK CRAWFORD — No. C12631 — Ren. 3-31-25 — STATE OF CALIFORNIA

THESE DRAWINGS ARE PRELIMINARY AND NOT FOR CONSTRUCTION UNLESS STAMPED & SIGNED BY THE DESIGN PROFESSIONAL OF RECORD.

REVISIONS
1
2
3
4

DRAWN BY:	AA
SCALE:	AS NOTED
DATE:	MM/DD/YY
PROJECT NO:	XXXX-22

SHEET TITLE:
RESTROOM FLOOR PLAN OPTIONS - AGE RANGE: 13-ADULT

SHEET NUMBER:
A1.2

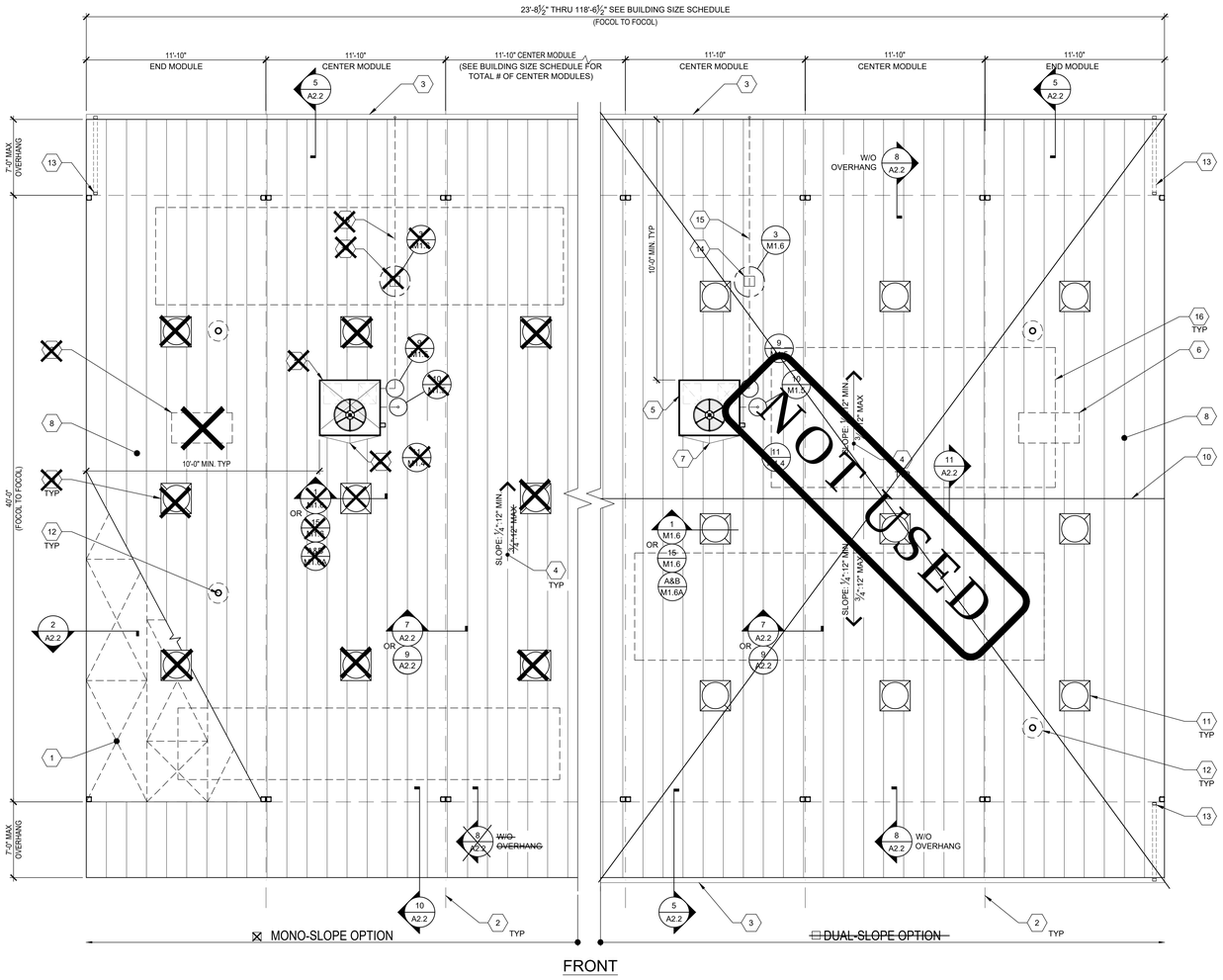

TYPICAL ROOF PLAN

SCALE: 1/4" = 1'-0" | 1

1. ROOF SHEATHING PER SHEET S4.1 ~~OR STEEL STRAP CROSS BRACING PER S4.0~~
2. TYPICAL MOD LINE
3. ~~OPTIONAL~~ GUTTER PER DETAIL 5/A2.2
4. TYPICAL ROOF SLOPE
5. ~~OPTIONAL ROOF MOUNTED HVAC PER M1.7A~~
6. ~~OPTIONAL ATTIC MOUNTED SPLIT-SYSTEM HVAC PER M1.7A~~
7. ~~CRICKET @ OPTIONAL HVAC PER 12/A2.2~~
8. STANDING SEAM METAL ROOF PER 7/S0.0 & DETAILS ON SHEET A2.2
9. NOT USED
10. ~~RIDGE @ DUAL SLOPE OPTION~~
11. ~~OPTIONAL SOLATUBE - SEE SHEET NOTE #1~~
12. PIPE VENT PER PLUMBING PLANS & 2/M1.6
13. ~~OPTIONAL~~ DOWNSPOUT - SEE ROOF DRAIN SCHEDULE BELOW FOR MIN. # OF DRAINS.
14. ~~ROOF TOP PIPE SUPPORT BLOCK PER DETAIL 3/M1.6~~
15. ~~CONDENSATE LINE PER DETAIL 9/M1.5~~
16. TYPICAL SOLAR READY AREA

KEY NOTES

1. SOLATUBE LOCATIONS SHOWN ON PLAN ARE GENERIC AND ACTUAL LOCATIONS MAY VARY - (4) MAX. PER MOD. FRAMING PER S4.0 ~~& S4.1~~ INSTALLATION PER DETAILS 1 OR 15/M1.6
2. OPTIONAL GUTTERS SHALL BE LOCATED ALONG THE END-WALLS OF THE BUILDING(S):
   - MONO-SLOPE: REAR END WALLS ONLY.
   - ~~DUAL-PITCH: BOTH FRONT & REAR END WALLS.~~
3. EITHER ROOF-SHEATHING OR STRAP CROSS BRACING MAY BE USED FOR MONO-SLOPE OR DUAL PITCH SLOPED BUILDING(S).

SHEET NOTES

SOLAR ZONE REQUIRED, PER TITLE 24 SECTION 110.10: FOR NON-RESIDENTIAL BUILDINGS, 3 STORIES OR LESS, A MINIMUM OF 15% OF ROOF AREA (EXCLUDING SKYLIGHTS) MUST BE SET ASIDE FOR PHOTO-VOLTAICS (PV). THE ROOF MUST HAVE NO ROOF OBSTRUCTIONS.

1. REQUIRED SOLAR-READY ZONE, AREA PER THE CHART BELOW, MUST BE PROVIDED ON BUILDING ROOF.
2. ZONE MUST BE LEFT VOID OF ROOF-MOUNTED HVAC UNITS, SKYLIGHTS OR OTHER OBSTRUCTIONS THAT WOULD HINDER FUTURE INSTALLATION OF SOLAR SYSTEM COMPONENTS, INCLUDING PV PANELS.
3. TOTAL AREA REQUIRED FOR SOLAR-READY ZONE DOES NOT NEED TO BE LOCATED IN ONE AREA BUT CAN BE SPREAD OUT OVER ROOF.
4. SOLAR-READY ZONE SHALL NOT INCLUDE ROOF OVERHANGS, AND SOLAR SYSTEM COMPONENTS MAY NOT BE PLACED THERE.
5. THE ROOF STRUCTURE HAS BEEN DESIGNED PER THE DESIGN LOADS SPECIFIED ON SHEET TS, WHICH DOES INCLUDE LOADS FROM SOLAR EQUIPMENT THAT MIGHT BE INSTALLED AT A LATER DATE.
6. EQUIPMENT SUCH AS SOLAR MODULES, INVERTERS, AND METERING EQUIPMENT DO NOT NEED TO BE INSTALLED, NOR DOES CONDUIT, PIPING, OR PRE-INSTALLED MOUNTING HARDWARE.
7. A STRUCTURAL ENGINEER SHOULD BE CONSULTED PRIOR TO ANY FUTURE SOLAR INSTALLATIONS TO DETERMINE THE ADEQUACY OF THE ROOF FRAMING TO SUSTAIN THE LOADS OF THE INSTALLATION ON THE BUILDING STRUCTURE.
8. A SEPARATE DSA APPLICATION NUMBER IS REQUIRED FOR DESIGN & INSTALLATION OF THE SOLAR PANEL SYSTEM, ITS ANCHORAGE & ROOF SUPPORT STRUCTURE.

ROOF AREA DRAINS (WITH 7'+7' OVERHANGS)

BUILDING SIZE (NOM.)	ROOF AREA	MINIMUM NO. OF DRAINS	SIZE OF DRAIN
☐ 24'x40'	1296	1	2x3
☐ 36'x40'	1644	1	2x3
☐ 48'x40'	2592	1	2x3
☐ 60'x40'	3420	2	2x3
☒ 72'x40'	3888	2	2x3
☐ 84'x40'	4536	2	2x3
☐ 96'x40'	5184	2	2x3
☐ 108'x40'	5832	2	2x3
☐ 120'x40'	6480	3	2x3

NOTES:
1. DOWNSPOUTS & LEADERS PER C.P.C. 1106.1 AND TABLE 1103.1.
2. PC DOWNSPOUT SIZING BASED ON ROOF AREA AND MAX RAINFALL RATE OF 3" PER HOUR. SITE SPECIFIC BUILDING MAY UTILIZE LOCAL RAINFALL RATE--PROVIDE SITE RAINFALL RATE TO DETERMINE MINIMUM NUMBER OF DRAINS REQUIRED.

ROOF DRAIN SCHEDULE

BUILDING SIZE SCHEDULE

BUILDING SIZE (FT)	TOTAL # OF 12'-0" WIDE MODULES	TOTAL # OF CENTER MODULES	OVERALL BUILDING WIDTH[1]
☐ 24'x40'	2	0	23'-8½"
☐ 36'x40'	3	1	35'-6¾"
☐ 48'x40'	4	2	47'-5"
☐ 60'x40'	5	3	59'-3¼"
☒ 72'x40'	6	4	71'-1½"
☐ 84'x40'	7	5	82'-11¾"
☐ 96'x40'	8	6	94'-10"
☐ 108'x40'	9	7	106'-8¼"
☐ 120'x40'	10	8	118'-6½"

NOTES:
1. TOTAL WIDTH INCLUDES 1/4" PER MODULE CONSTRUCTION TOLERANCE PER FOUNDATION.

BUILDING SIZE SCHEDULE

NOT USED | 3

NOT USED | 4

REQUIRED SOLAR-READY ZONE

BUILDING SIZE (NOM.)	MAX. ROOF AREA (SQ. FT.)	REQ'D ZONE AREA (SQ. FT.)	*CLIMATE ZONE GROUP(S)
☐ 24'x40'	960	0	N/A
☐ 36'x40'	1440	0	N/A
☐ 48'x40'	1920	288	D
☐ 60'x40'	2400	360	D
☒ 72'x40'	2880	432	C
☐ 84'x40'	3360	504	A, B & D
☐ 96'x40'	3840	576	A & D
☐ 108'x40'	4320	648	D
☐ 120'x40'	4800	720	D

*NOTE:
~~GROUP A: CLIMATE ZONES 1, 16~~
~~GROUP B: CLIMATE ZONES 2 - 5~~
GROUP C: CLIMATE ZONES 6 - 13
~~GROUP D: CLIMATE ZONES 14, 15~~

SOLAR-READY ZONE REQUIREMENTS

IDENTIFICATION STAMP
DIV. OF THE STATE ARCHITECT
APP: 03-124589 INC:
REVIEWED FOR
SS ☑ FLS ☑ ACS ☑
DATE: 04/15/2025

AMS®
American Modular Systems
787 Spreckels Ave., Manteca, CA 95336
Phone (209) 825-1921 Fax (209) 825-7018
www.americanmodular.com

INTELLECTUAL-PROPERTY & PROPRIETARY RIGHTS STATEMENT
COPYRIGHT © AMERICAN MODULAR SYSTEMS (AMS)
AMS OWNS ALL COPYRIGHT AND OTHER INTELLECTUAL-PROPERTY AND PROPRIETARY RIGHTS IN THESE DRAWINGS, SPECIFICATIONS, AND THE MATERIAL CONTAINED HEREIN. CERTAIN ELEMENTS SHOWN IN THESE DOCUMENTS ARE REGISTERED TRADEMARKS OF AMS. ALL PATENTABLE MATERIALS CONTAINED IN THESE DOCUMENTS AND ORIGINATING WITH AMS WILL REMAIN THE SOLE PROPERTY OF AMS. THESE DRAWING, SPECIFICATIONS, AND THE MATERIAL CONTAINED HEREIN MAY NOT BE REPRODUCED, TRANSMITTED, COPIED, DISTRIBUTED, MODIFIED, OR OTHERWISE DISPOSED OF (DIRECTLY OR INDIRECTLY) AND MAY NOT BE USED (IN WHOLE OR IN PART) TO ASSIST IN THE CONSTRUCTION, DESIGN, OR OTHER MAKING OF, OR FOR THE PURPOSE OF FURNISHING ANY INFORMATION FOR THE CONSTRUCTION, DESIGN, OR OTHER MAKING OF, ANY BUILDINGS (MODULAR OR OTHERWISE), DRAWINGS, SPECIFICATIONS, PRINTS, APPARATUS, OR PARTS THEREOF, EXCEPT AS EXPRESSLY PERMITTED BY WRITTEN CONSENT OF, OR IN A WRITTEN AGREEMENT WITH, AMS. SUBMITTAL OR DISTRIBUTION TO MEET OFFICIAL REGULATORY REQUIREMENTS WILL NOT BE CONSTRUED AS PUBLICATION IN DEROGATION OF AMS'S COPYRIGHT OR OTHER INTELLECTUAL-PROPERTY OR PROPRIETARY RIGHTS.

PRE-CHECKED SET NAME
24' x 40' THRU 120' x 40'
STANDARD MODULAR BUILDING
(HIGH SEISMIC)
FORM®

SITE SPECIFIC PROJECT NAME
VENTURA COLLEGE
(1) 72'x40' BUILDING

APPROVED
DIV. OF THE STATE ARCHITECT
APP: 04-122051 PC
REVIEWED FOR
SS ☑ FLS ☑ ACS ☑ CG ☑
DATE: 04/03/2024

☒ 2022 CBC PRE-CHECK (PC) DOCUMENT
A SEPARATE FIRE-RESIST AND SEISMIC/WIND CONSTRUCTION IS REQUIRED

MANUFACTURER PROFESSIONAL OF RECORD ON PC

LICENSED ARCHITECT
PATRICK CHANG
No. C12631
Ren. 3-31-25
STATE OF CALIFORNIA

THESE DRAWINGS ARE PRELIMINARY AND NOT FOR CONSTRUCTION UNLESS STAMPED & SIGNED BY THE DESIGN PROFESSIONAL OF RECORD.

REVISIONS
1
2
3
4

DRAWN BY:	AA
SCALE:	AS NOTED
DATE:	MM/DD/YY
PROJECT NO:	XXXX-22

SHEET TITLE:
TYPICAL ROOF PLAN
METAL STANDING SEAM
(WITHOUT PARAPETS)

SHEET NUMBER:
A2.0

1. REFER TO BUILDING SECTIONS IN SHEET A7.3 FOR BUILDING ENVELOPE
2. REFER TO MINIMUM INSULATION SCHEDULES ON SHEET M1.7 FOR ALL INSULATION REQUIREMENTS.

1 NOTES

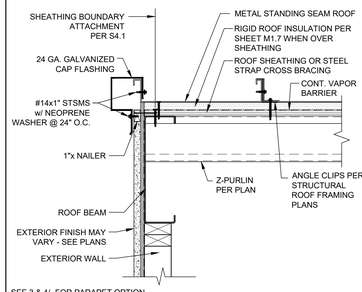

SEE 3 & 4/- FOR PARAPET OPTION.
SEE SHEETS A5.2, A5.4, & A5.6 FOR EXTERIOR FINISHES.

2 METAL ROOF w/ DECKING

SCALE : 1 1/2"=1'-0"

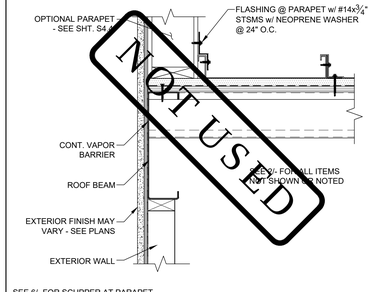

SEE 6/- FOR SCUPPER AT PARAPET.
SEE SHEETS A5.2, A5.4, & A5.6 FOR EXTERIOR FINISHES.

3 OPTIONAL PARAPET @ METAL ROOF SIDE

SCALE : 1 1/2"=1'-0"

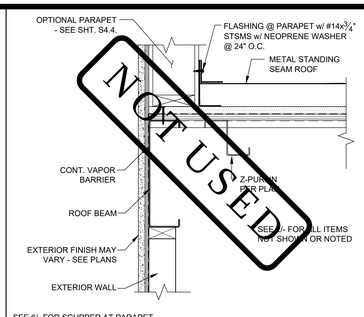

SEE 6/- FOR SCUPPER AT PARAPET.
SEE SHEETS A5.2, A5.4, & A5.6 FOR EXTERIOR FINISHES.

4 OPTIONAL PARAPET @ METAL ROOF END

SCALE : 1 1/2"=1'-0"

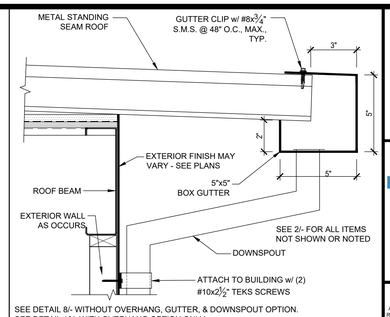

SEE DETAIL 8/- WITHOUT OVERHANG, GUTTER, & DOWNSPOUT OPTION.
SEE DETAIL 10/- WITH OVERHANG OPTION ONLY.
SEE SHEET S4.1 FOR SOFFIT NOT SHOWN.

5 TYP. GUTTER ATTACHMENT

SCALE : 1 1/2"=1'-0"

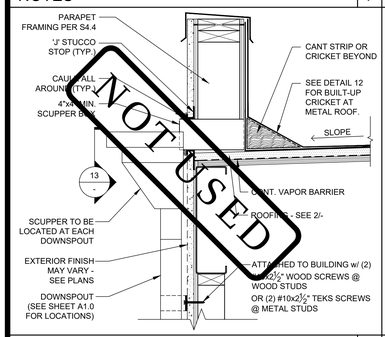

6 TYP. SCUPPER DETAIL

SCALE : 1 1/2"=1'-0"

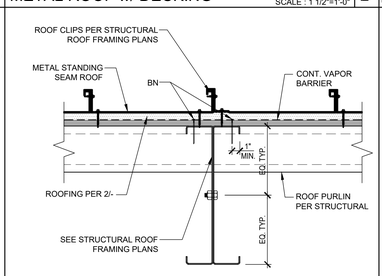

NOTE: SEE DETAIL 9/- FOR OPTIONAL MOD-LINE CONNECTION AT SEISMIC JOINT.

7 TYP. ROOF BEAM CONN. @ MODLINE

SCALE : 1 1/2"=1'-0"

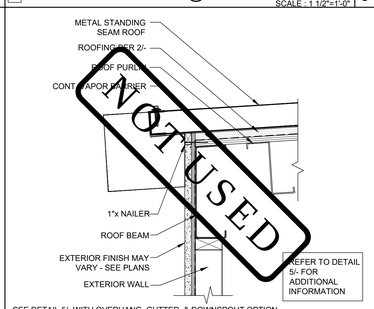

SEE DETAIL 5/- WITH OVERHANG, GUTTER, & DOWNSPOUT OPTION.
SEE DETAIL 10/- WITH OVERHANG OPTION ONLY.
SEE SHEET S4.1 FOR SOFFIT NOT SHOWN.

8 METAL ROOF @ END WALLS (w/o OVERHANGS)

SCALE : 1 1/2"=1'-0"

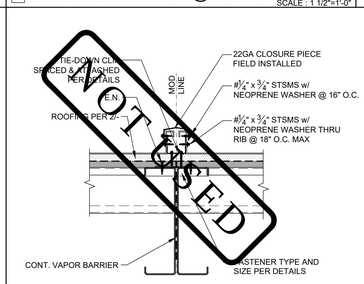

NOTE: SEE DETAIL 7/- FOR TYPICAL MOD-LINE CONNECTION.

9 METAL ROOF @ MODLINE OPTION

SCALE : 1 1/2"=1'-0"

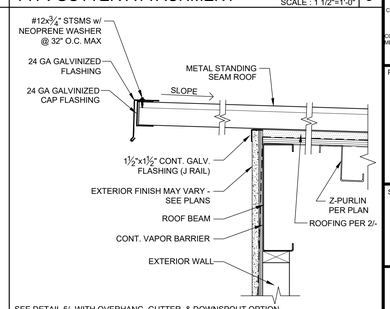

SEE DETAIL 5/- WITH OVERHANG, GUTTER, & DOWNSPOUT OPTION.
SEE DETAIL 8/- WITHOUT OVERHANG, GUTTER, & DOWNSPOUT OPTION.
SEE SHEET S4.1 FOR SOFFIT NOT SHOWN.

10 METAL ROOF EDGE @ OVERHANG

SCALE : 1 1/2"=1'-0"

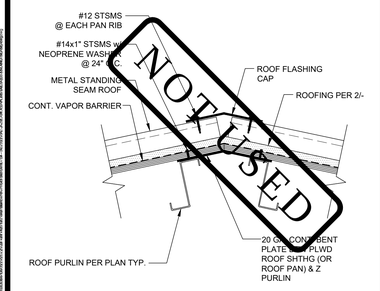

11 OPTIONAL METAL DUAL SLOPED

SCALE: 1-1/2"=1'-0"

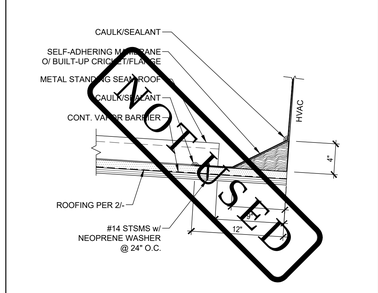

12 BUILT-UP CRICKET AT METAL ROOF

SCALE: 1-1/2"=1'-0"

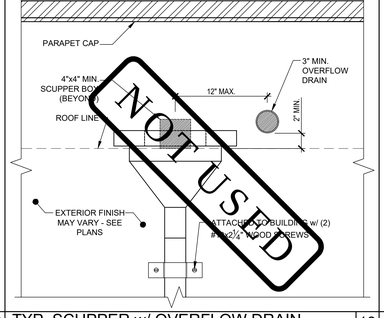

13 TYP. SCUPPER w/ OVERFLOW DRAIN

SCALE: 1-1/2"=1'-0"

14 NOT USED

15 NOT USED

16 NOT USED

17 NOT USED

18 NOT USED

19 NOT USED

20 NOT USED

IDENTIFICATION STAMP
DIV. OF THE STATE ARCHITECT
APP: 03-124589 INC:
REVIEWED FOR
SS ☑ FLS ☑ ACS ☑
DATE: 04/15/2025

AMS®
American Modular Systems
787 Spreckels Ave., Manteca, CA 95336
Phone (209) 825-1921 Fax (209) 825-7018
www.americanmodular.com

INTELLECTUAL-PROPERTY & PROPRIETARY RIGHTS STATEMENT
COPYRIGHT © AMERICAN MODULAR SYSTEMS (AMS)
AMS OWNS ALL COPYRIGHT AND OTHER INTELLECTUAL-PROPERTY AND PROPRIETARY RIGHTS IN THESE DRAWINGS, SPECIFICATIONS, AND THE MATERIAL CONTAINED HEREIN. CERTAIN ELEMENTS SHOWN IN THESE DOCUMENTS ARE REGISTERED TRADEMARKS OF AMS. ALL PATENTABLE MATERIALS CONTAINED IN THESE DOCUMENTS AND ORIGINATING WITH AMS WILL REMAIN THE SOLE PROPERTY OF AMS. THESE DRAWINGS, SPECIFICATIONS AND THE MATERIAL CONTAINED HEREIN MAY NOT BE REPRODUCED, TRANSMITTED, COPIED, DISTRIBUTED, MODIFIED, OR OTHERWISE DISPOSED OF (DIRECTLY OR INDIRECTLY) AND MAY NOT BE USED (IN WHOLE OR IN PART) TO ASSIST IN THE CONSTRUCTION, DESIGN, OR OTHER MAKING OF, OR FOR THE PURPOSE OF FURNISHING ANY INFORMATION FOR THE CONSTRUCTION, DESIGN, OR OTHER MAKING OF, ANY BUILDINGS (MODULAR OR OTHERWISE), DRAWINGS, SPECIFICATIONS, PRINTS, APPARATUS, OR PARTS THEREOF, EXCEPT AS EXPRESSLY PERMITTED BY WRITTEN CONSENT OF, OR IN A WRITTEN AGREEMENT WITH, AMS. SUBMITTAL OR DISTRIBUTION TO MEET OFFICIAL REGULATORY REQUIREMENTS WILL NOT BE CONSTRUED AS PUBLICATION IN DEROGATION OF AMS'S COPYRIGHT OR OTHER INTELLECTUAL-PROPERTY OR PROPRIETARY RIGHTS.

PRE-CHECKED SET NAME
24' x 40' THRU 120' x 40'
STANDARD MODULAR BUILDING
(HIGH SEISMIC)
FORM®

SITE SPECIFIC PROJECT NAME
VENTURA COLLEGE
(1) 72'x40' BUILDING

APPROVED
DIV. OF THE STATE ARCHITECT
APP: 04-122051 PC
REVIEWED FOR
SS ☑ FLS ☑ ACS ☑ CG ☑
DATE: 04/03/2024

☒ 2022 CBC PRE-CHECK (PC) DOCUMENT
A SEPARATE FIRE DEPT. AND CLIENT CONSTRUCTION PLAN REQUIRED

MANUFACTURER PROFESSIONAL OF RECORD ON PC

LICENSED ARCHITECT
PATRICK O'NEILL
No. C12631
Ren. 3-31-25
STATE OF CALIFORNIA

THESE DRAWINGS ARE PRELIMINARY AND NOT FOR CONSTRUCTION UNLESS STAMPED & SIGNED BY THE DESIGN PROFESSIONAL OF RECORD.

REVISIONS
1
2
3
4

DRAWN BY:	AA
SCALE:	AS NOTED
DATE:	MM/DD/YY
PROJECT NO:	XXXX-22

SHEET TITLE:
TYPICAL ROOF DETAILS
METAL STANDING SEAM

SHEET NUMBER:
A2.2

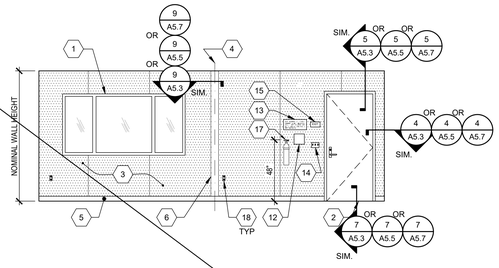

TYPICAL CLASSROOM FRONT END WALL ELEVATION SCALE : 1/4"=1'-0" 1

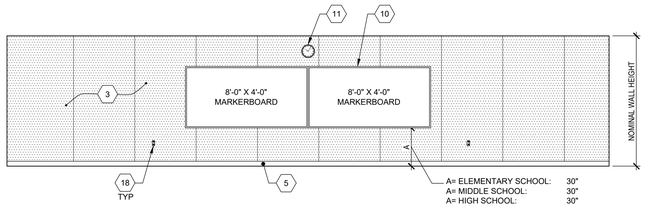

TYPICAL CLASSROOM SIDE WALL ELEVATION SCALE : 1/4"=1'-0" 2

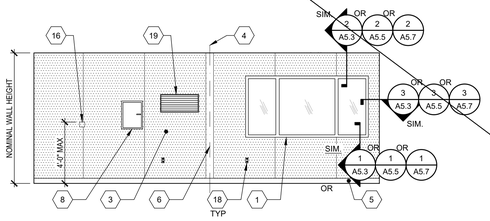

TYPICAL CLASSROOM REAR END WALL ELEVATION

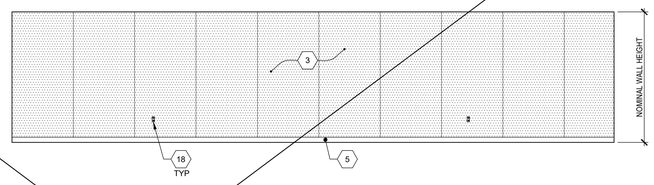

SCALE : 1/4"=1'-0" 4

SEE SHEET A4.0-M FOR SITE SPECIFIC SHEET

NOT USED 5

NOT USED 6

NOT USED 7

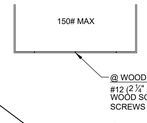

› STUDS:
MIN
\TION INTO
OOD SCREWS TO
) 16" O.C. TOP
SCREWS FOR AN
8'-0" BOARD)

@ METAL STUDS:
#8x2" STS @ 16" O.C. TOP
(MIN. (5) SCREWS FOR AN
8'-0" BOARD)

@ WOOD STUDS:
#12 (2 ½" MIN PENETRATION INTO STUD)
WOOD SCREWS @ 32" O.C. BOT. (MIN. (3)
SCREWS FOR AN 8'-0" BOARD)

@ METAL STUDS:
#8x2" STS @ 32" O.C. BOT. (MIN. (3)
SCREWS FOR AN 8'-0" BOARD)

NOTE:
1. ATTACHMENT IS FOR EACH MARKERBOARD.
2. EACH WHITEBOARD SHALL PROTRUDE 4" MAX HORIZONTALLY INTO THE CIRCULATION PATH, PER CBC SECTION 11B-307.2.
3. EACH WHITEBOARD SHALL HAVE FASTENERS PROVIDED BY MANUFACTURER AS NOTED ABOVE.

MARKERBOARD ATT. DETAIL SCALE : 1/4"=1'-0" 8

NOT USED 9

NOT USED 10

NOT USED 11

NOT USED 12

1. WINDOW, SEE SPEC'S
2. TYP EXTERIOR DOOR
3. TACKBOARD - (FLAME RESISTANT INDUSTRIAL TACKABLE BOARD) - SHALL BE CLASS A RATED (ASTM E-84). NOMINAL PANEL THICKNESS SHALL BE ± 0.5" AND SHALL BE INSTALED IN ACCORDANCE WITH THE MANUFACTURER'S GUIDELINES.
4. TYP MOD LINE
5. TOP SET BASE
6. FULL PANEL CLOSE-UP AT MOD-LINES, TYP
7. NOT USED
8. ELECTRICAL PANEL - SEE ELECTRICAL SHEETS
9. NOT USED
10. (2) 8'x4' MARKER BOARDS - SEE DETAIL 8/A4.0
11. CLOCK
12. ASSISTIVE LISTENING SIGN, BY OTHERS, INSTALLED PER DETAIL 17/N4.0 SIGN SHALL BE A MAXIMUM OF 70" A.F.F. TO BASELINE OF HIGHEST TEXT.
13. OCCUPANT LOAD SIGN PER DETAIL 11/N4.0 (BY OTHERS)
14. LIGHT SWITCH - SEE ELECTRICAL SHEETS
15. EXIT TACTILE SIGN PER DETAIL 10/N4.0 (NIC)
16. THERMOSTAT, TOP @ 48" A.F.F. - SEE MECHANICAL SHEETS
17. FIRE EXTINGUISHER TOP OF HANDLE @ +48" MAX. A.F.F. PROTRUSION MAX 4" FROM WALL IF BOTTOM OF FIRE EXTINGUISHER GREATER THAN +27" A.F.F - SEE 19/N4.0
18. TYP DUPLEX OUTLET - SEE ELECTRICAL SHEETS
19. HVAC GRILL

KEY NOTES

IDENTIFICATION STAMP
DIV. OF THE STATE ARCHITECT
APP: 03-124589 INC:
REVIEWED FOR
SS ☑ FLS ☑ ACS ☑
DATE: 04/15/2025

AMS®
American Modular Systems
787 Spreckels Ave., Manteca, CA 95336
Phone (209) 825-1921 Fax (209) 825-7018
www.americanmodular.com

INTELLECTUAL-PROPERTY & PROPRIETARY RIGHTS STATEMENT
COPYRIGHT © AMERICAN MODULAR SYSTEMS (AMS)
AMS OWNS ALL COPYRIGHT AND OTHER INTELLECTUAL-PROPERTY AND PROPRIETARY RIGHTS IN THESE DRAWINGS, SPECIFICATIONS, AND THE MATERIAL CONTAINED HEREIN. CERTAIN ELEMENTS SHOWN IN THESE DOCUMENTS ARE REGISTERED TRADEMARKS OF AMS. ALL PATENTABLE MATERIALS CONTAINED IN THESE DOCUMENTS AND ORIGINATING WITH AMS WILL REMAIN THE SOLE PROPERTY OF AMS. THESE DRAWING, SPECIFICATIONS, AND THE MATERIAL CONTAINED HEREIN MAY NOT BE REPRODUCED, TRANSMITTED, COPIED, DISTRIBUTED, MODIFIED, OR OTHERWISE DISPOSED OF (DIRECTLY OR INDIRECTLY) AND MAY NOT BE USED (IN WHOLE OR IN PART) TO ASSIST IN THE CONSTRUCTION, DESIGN, OR OTHER MAKING OF, OR FOR THE PURPOSE OF FURNISHING ANY INFORMATION FOR THE CONSTRUCTION, DESIGN, OR OTHER MAKING OF, ANY BUILDINGS (MODULAR OR OTHERWISE), DRAWINGS, SPECIFICATIONS, PRINTS, APPARATUS, OR PARTS THEREOF, EXCEPT AS EXPRESSLY PERMITTED BY WRITTEN CONSENT OF, OR IN A WRITTEN AGREEMENT WITH, AMS. SUBMITTAL OR DISTRIBUTION TO MEET OFFICIAL REGULATORY REQUIREMENTS WILL NOT BE CONSTRUED AS PUBLICATION IN DEROGATION OF AMS'S COPYRIGHT OR OTHER INTELLECTUAL-PROPERTY OR PROPRIETARY RIGHTS.

PRE-CHECKED SET NAME
24' x 40' THRU 120' x 40'
STANDARD MODULAR BUILDING
(HIGH SEISMIC)
FORM®

SITE SPECIFIC PROJECT NAME

APPROVED
DIV. OF THE STATE ARCHITECT
APP: 04-122051 PC
REVIEWED FOR
SS ☑ FLS ☑ ACS ☑ CG ☑
DATE: 04/03/2024

☐ 2022 CBC PRE-CHECK (PC) DOCUMENT
A SEPARATE DSA-101 APPLICATION FOR CONSTRUCTION IS REQUIRED

MANUFACTURER PROFESSIONAL OF RECORD ON PC

LICENSED ARCHITECT
PATRICK O'MALLEY
No. C12631
Ren. 3-31-25
STATE OF CALIFORNIA

THESE DRAWINGS ARE PRELIMINARY AND NOT FOR CONSTRUCTION UNLESS STAMPED & SIGNED BY THE DESIGN PROFESSIONAL OF RECORD.

REVISIONS
1
2
3
4

DRAWN BY:	AA
SCALE:	AS NOTED
DATE:	MM/DD/YY
PROJECT NO:	XXXX-22

SHEET TITLE:
INTERIOR ELEVATIONS
TYPICAL CLASSROOM

SHEET NUMBER:
A4.0

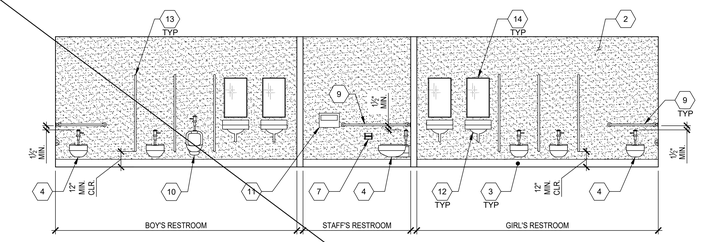

RESTROOM SIDEWALL ELEVATION - GIRLS, STAFF, BOYS SCALE: 1/4" = 1'-0" 1

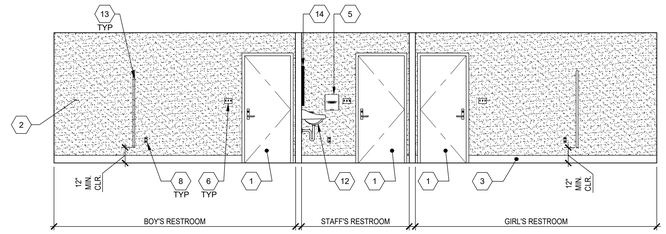

RESTROOM SIDEWALL ELEVATION - GIRLS, STAFF, BOYS SCALE: 1/4" = 1'-0" 2

1. TYPICAL DOOR
2. F.R.P. (FIBER REINFORCED PLASTIC) - SHALL BE CLASS C RATED (ASTM E-84) EMBOSSED & SMOOTH INTERIOR WALL PANELS. NOMINAL PANEL THICKNESS SHALL BE ± 0.090 - PANEL SHALL BE INSTALLED IN ACCORDANCE WITH THE MANUFACTURER'S GUIDELINES.
3. 6" TOP SET BASE - REFER TO DETAIL 5/A1.2
4. ACCESSIBLE TOILET - SEE DETAIL 14/P2.0
5. PAPER TOWEL DISPENSER OR HAND DRYER (BY OTHERS)
6. LIGHT SWITCH - SEE ELECTRICAL SHEETS
7. TOILET PAPER DISPENSER PER P1.0
8. TYP. GFCI OUTLET - SEE ELECTRICAL SHEETS
9. GRAB BAR - SEE DETAIL 6/A7.1
10. ACCESSIBLE URINAL - SEE DETAIL 15/P2.0
11. TOILET SEAT COVER DISPENSER PER P1.0
12. ACCESSIBLE LAVATORY - SEE DETAIL 17/P2.0
13. TOILET PARTITIONS: SOLID PLASTIC BY ACCURATE PARTITIONS CORP., OR EQUIVALENT, w/ FLOOR ANCHORS, OVERHEAD BRACED OR EQUIVALENT. MINIMUM FLAME SPREAD RATING: 50. MINIMUM SMOKE DEVELOPMENT RATING: 450. (BY OTHERS)
14. TYP. MIRROR (19" MAX. WEIGHT) - SEE DETAIL 17/P2.0
15. WINDOW - SEE SPEC'S

NOTE: FOR ACCESSIBLE FIXTURES & ACCESSORIES MOUNTING HEIGHT REQUIREMENTS (PER 2022 CBC CHAPTER 11B), SEE SHEET P2.0/10 FOR ACCESSIBLE HEIGHTS TABLE.

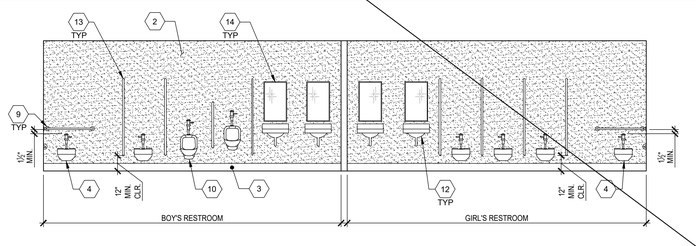

RESTROOM SIDEWALL ELEVATION - BOYS & GIRLS SCALE: 1/4" = 1'-0" 3

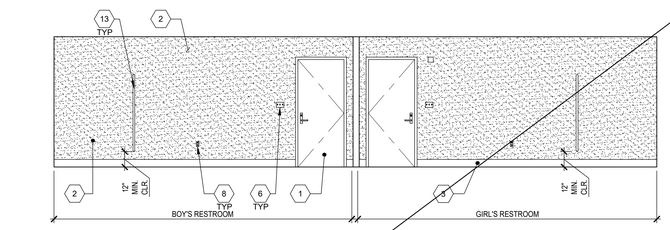

RESTROOM SIDEWALL ELEVATION - BOYS & GIRLS SCALE: 1/4" = 1'-0" 4

KEY NOTES

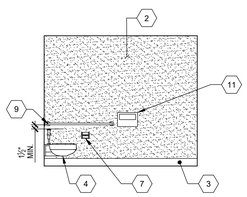

RESTROOM ENDWALL ELEV. - GIRLS SCALE: 1/4" = 1'-0" 5

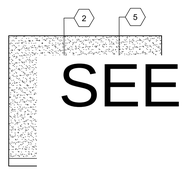

RESTROOM INTERIOR WALL ELEV. - GIRLS SCALE: 1/4" = 1'-0" 6

RESTROOM INTERIOR WALL ELEV. - BOYS SCALE: 1/4" = 1'-0" 7

RESTROOM ENDWALL ELEV. - BOYS SCALE: 1/4" = 1'-0" 8

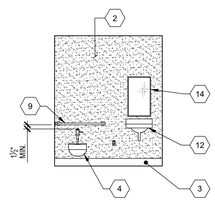

RESTROOM INTERIOR WALL ELEV. - STAFF SCALE: 1/4" = 1'-0" 9

SEE SHEET A4.1-M FOR SITE SPECIFIC SHEET

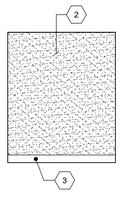

RESTROOM INTERIOR WALL ELEV. - STAFF SCALE: 1/4" = 1'-0" 10

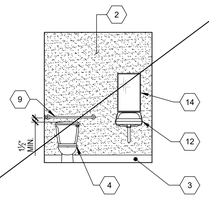

SINGLE TOILET ELEVATION - UNISEX SCALE: 1/4" = 1'-0" 11

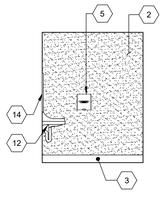

SINGLE TOILET ELEVATION - UNISEX SCALE: 1/4" = 1'-0" 12

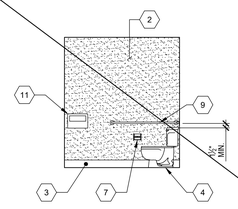

SINGLE TOILET ELEVATION - UNISEX SCALE: 1/4" = 1'-0" 13

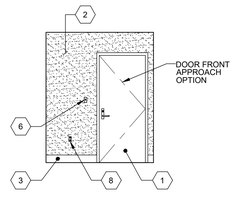

SINGLE TOILET ELEVATION - UNISEX SCALE: 1/4" = 1'-0" 14

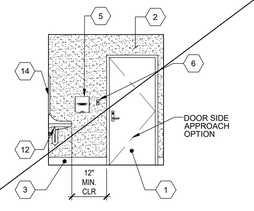

SINGLE TOILET ELEVATION - UNISEX SCALE: 1/4" = 1'-0" 15

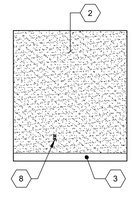

SINGLE TOILET ELEVATION - UNISEX SCALE: 1/4" = 1'-0" 16

NOT USED 17

NOT USED 18

NOT USED 19

IDENTIFICATION STAMP
DIV. OF THE STATE ARCHITECT
APP: 03-124589 INC:
REVIEWED FOR
SS ☑ FLS ☑ ACS ☑
DATE: 04/15/2025

American Modular Systems
787 Spreckels Ave., Manteca, CA 95336
Phone (209) 825-1921 Fax (209) 825-7018
www.americanmodular.com

INTELLECTUAL-PROPERTY & PROPRIETARY RIGHTS STATEMENT
COPYRIGHT © AMERICAN MODULAR SYSTEMS (AMS)
AMS OWNS ALL COPYRIGHT AND OTHER INTELLECTUAL-PROPERTY AND PROPRIETARY RIGHTS IN THESE DRAWINGS, SPECIFICATIONS, AND THE MATERIAL CONTAINED HEREIN. CERTAIN ELEMENTS SHOWN IN THESE DOCUMENTS ARE REGISTERED TRADEMARKS OF AMS. ALL PATENTABLE MATERIALS CONTAINED IN THESE DOCUMENTS AND ORIGINATING WITH AMS WILL REMAIN THE SOLE PROPERTY OF AMS. THESE DRAWING, SPECIFICATIONS, AND THE MATERIAL CONTAINED HEREIN MAY NOT BE REPRODUCED, TRANSMITTED, COPIED, DISTRIBUTED, MODIFIED, OR OTHERWISE DISPOSED OF (DIRECTLY OR INDIRECTLY) AND MAY NOT BE USED (IN WHOLE OR IN PART) TO ASSIST IN THE CONSTRUCTION, DESIGN, OR OTHER MAKING OF, OR FOR THE PURPOSE OF FURNISHING ANY INFORMATION FOR THE CONSTRUCTION, DESIGN, OR OTHER MAKING OF, ANY BUILDINGS (MODULAR OR OTHERWISE), DRAWINGS, SPECIFICATIONS, PRINTS, APPARATUS, OR PARTS THEREOF, EXCEPT AS EXPRESSLY PERMITTED BY WRITTEN CONSENT OF, OR IN A WRITTEN AGREEMENT WITH, AMS. SUBMITTAL OR DISTRIBUTION TO MEET OFFICIAL REGULATORY REQUIREMENTS WILL NOT BE CONSTRUED AS PUBLICATION IN DEROGATION OF AMS'S COPYRIGHT OR OTHER INTELLECTUAL-PROPERTY OR PROPRIETARY RIGHTS.

PRE-CHECKED SET NAME
24' x 40' THRU 120' x 40'
STANDARD MODULAR BUILDING
(HIGH SEISMIC)
FORM®

SITE SPECIFIC PROJECT NAME

APPROVED
DIV. OF THE STATE ARCHITECT
APP: 04-122051 PC
REVIEWED FOR
SS ☑ FLS ☑ ACS ☑ CG ☑
DATE: 04/03/2024

☐ 2022 CBC PRE-CHECK (PC) DOCUMENT
A SEPARATE PROJECT APPLICATION FOR CONSTRUCTION IS REQUIRED

MANUFACTURER PROFESSIONAL OF RECORD ON PC

LICENSED ARCHITECT PATRICK CUNNINGHAM No. C12631 Ren. 3-31-25 STATE OF CALIFORNIA

THESE DRAWINGS ARE PRELIMINARY AND NOT FOR CONSTRUCTION UNLESS STAMPED & SIGNED BY THE DESIGN PROFESSIONAL OF RECORD.

REVISIONS
1
2
3
4

DRAWN BY:	AA
SCALE:	AS NOTED
DATE:	MM/DD/YY
PROJECT NO:	XXXX-22

SHEET TITLE:
INTERIOR ELEVATIONS
RESTROOM OPTIONS

SHEET NUMBER:
A4.1

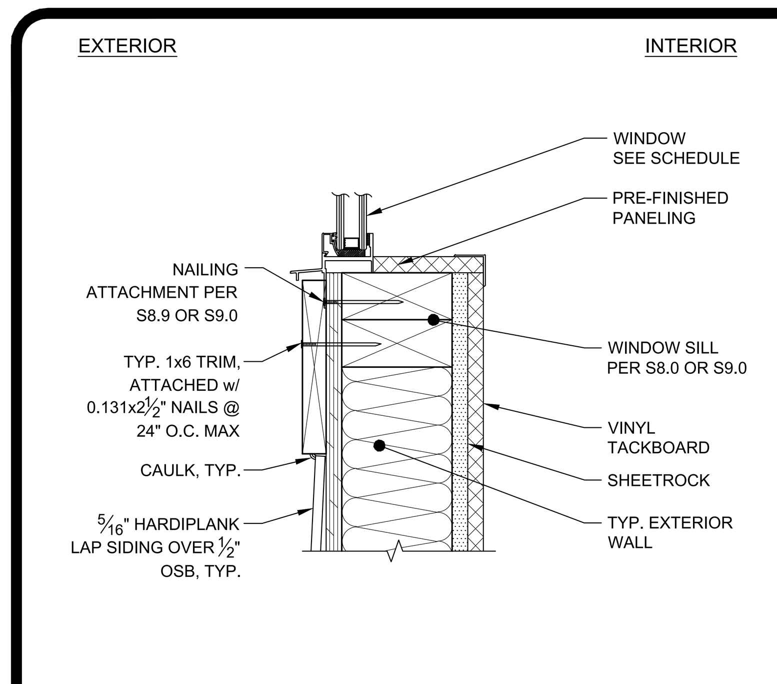

TYPICAL WINDOW SILL — SCALE: 3" = 1'-0" — 1

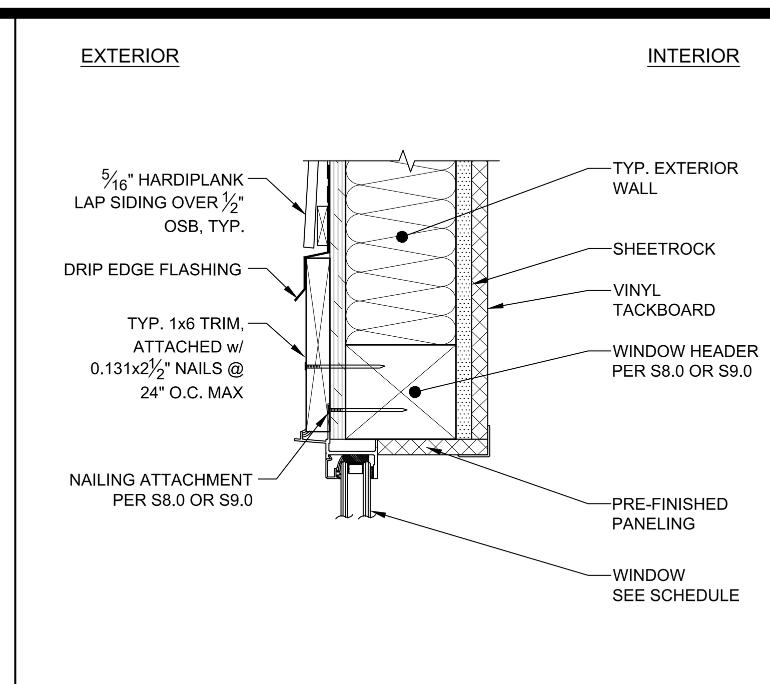

TYPICAL WINDOW HEADER — SCALE: 3" = 1'-0" — 2

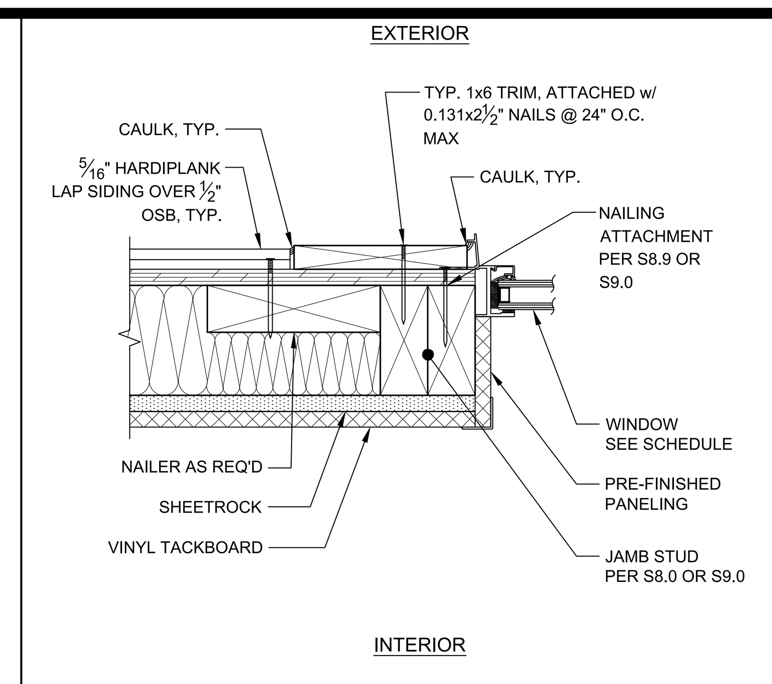

TYPICAL WINDOW JAMB — SCALE: 3" = 1'-0" — 3

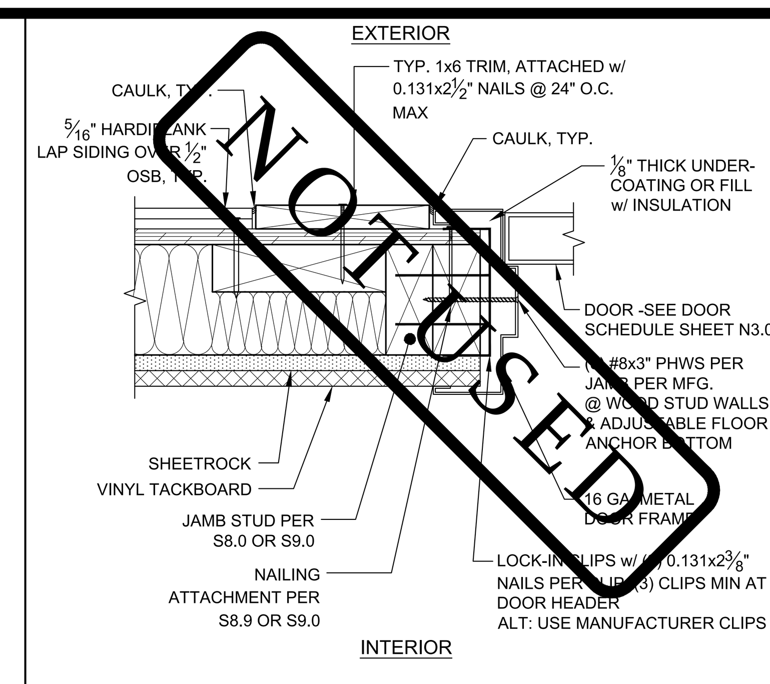

TYPICAL DOOR JAMB — SCALE: 3" = 1'-0" — 4

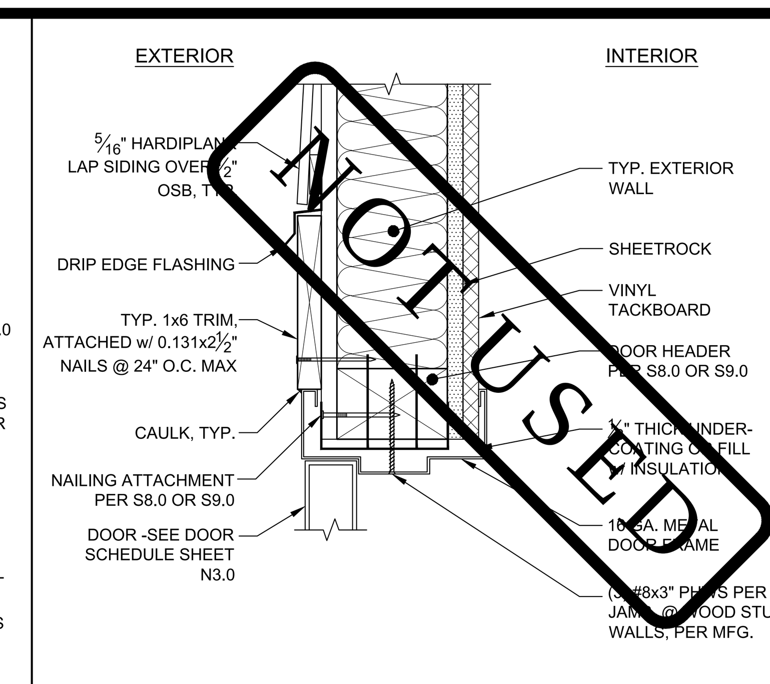

TYPICAL DOOR HEADER — SCALE: 3" = 1'-0" — 5

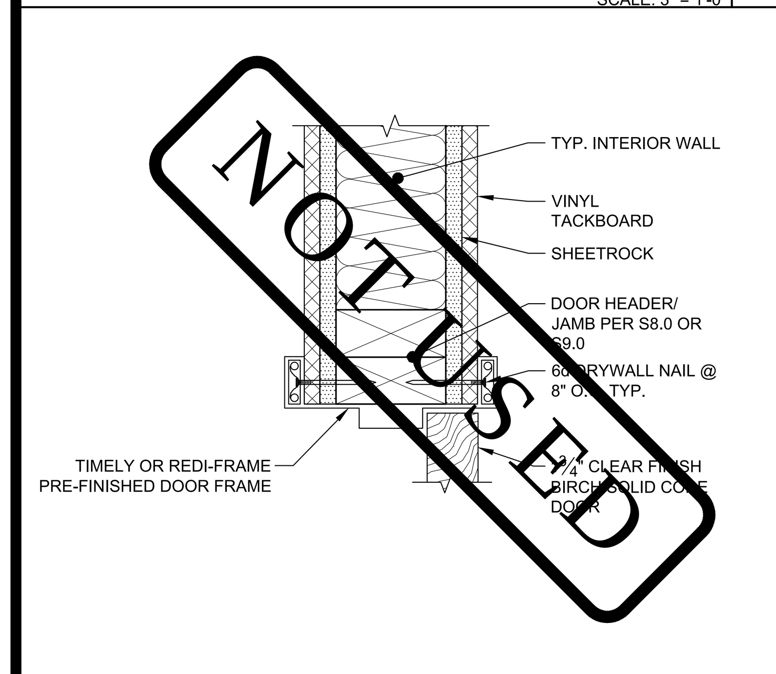

TYP. INTERIOR DOOR HEADER/JAMB — SCALE: 3" = 1'-0" — 6

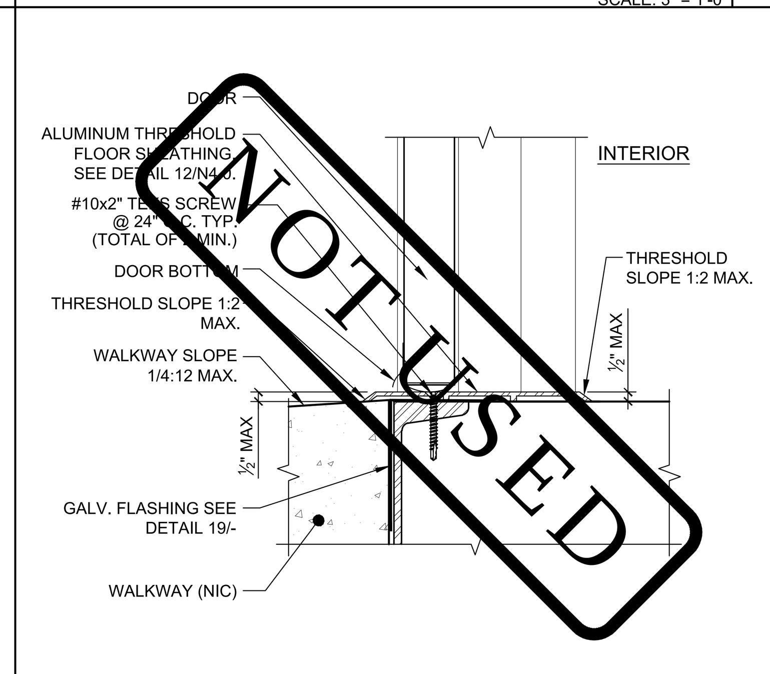

TYPICAL THRESHOLD DETAIL — SCALE: 3" = 1'-0" — 7

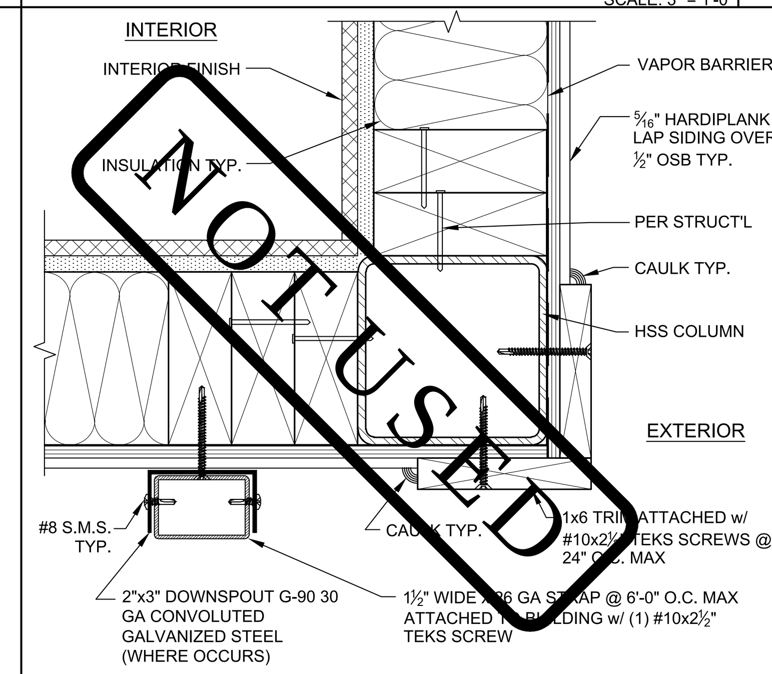

TYP. BLDG CORNER & DOWNSPOUT ATTACHMENT DETAIL — SCALE: 3" = 1'-0" — 8

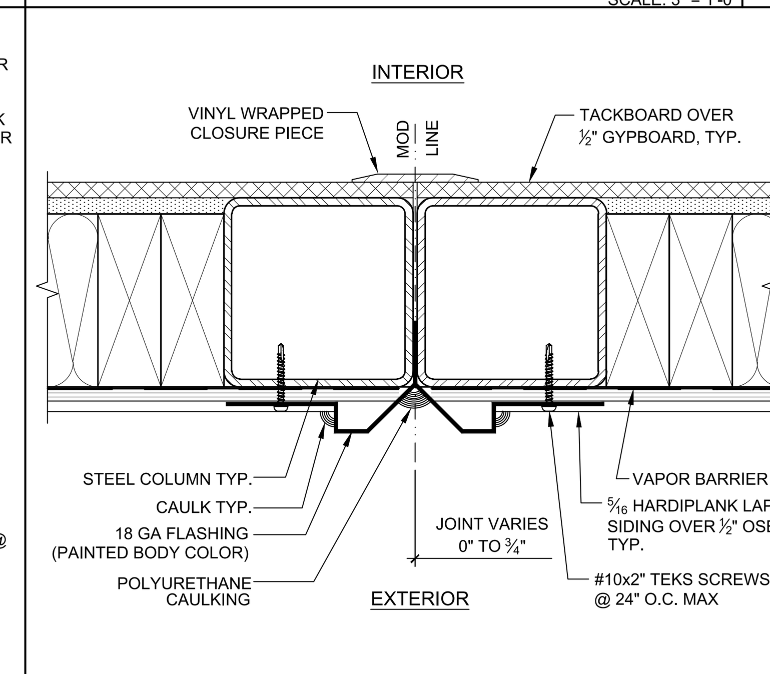

TYP. MODLINE CLOSURE DETAIL — SCALE: 3" = 1'-0" — 9

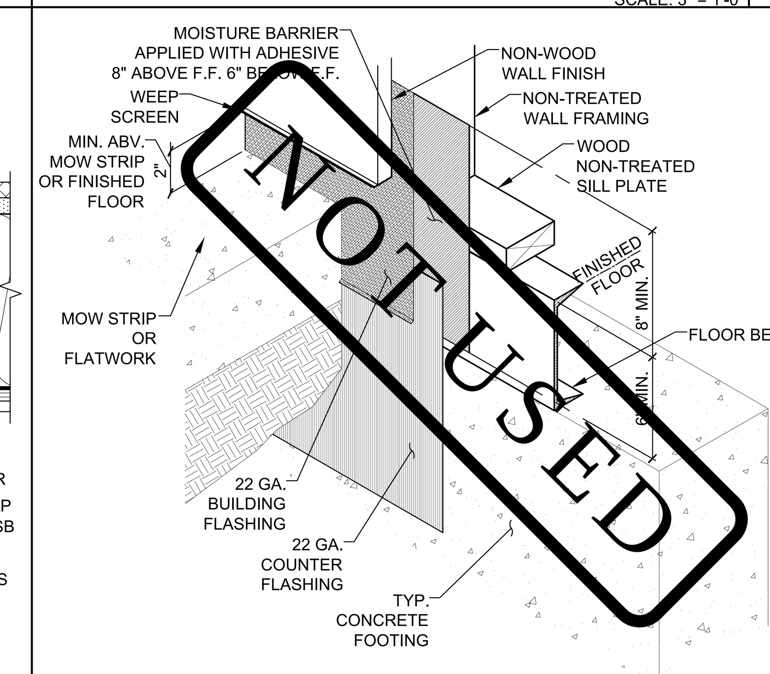

ISOMETRIC FLASHING DETAIL FOR BUILDINGS 2160 SQ. FT. OR LESS — SCALE: 1 1/2" = 1'-0" — 10

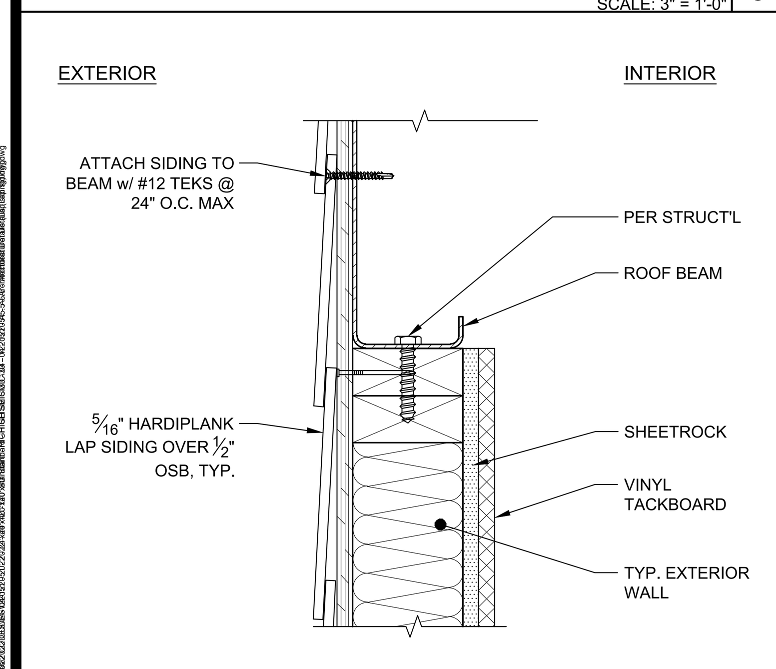

SIDING DETAIL @ ROOF BEAM — SCALE: 3" = 1'-0" — 11

NOT USED — 12

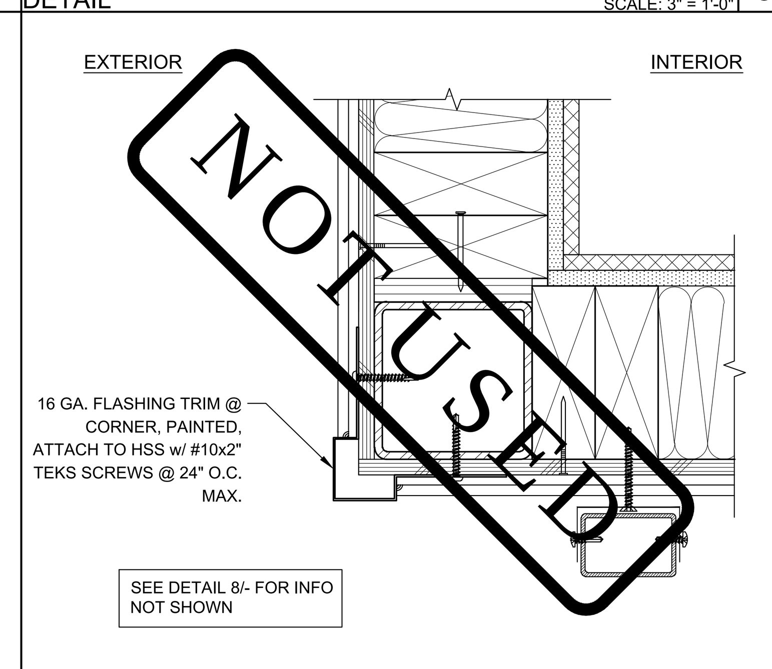

ALTERNATE BUILDING CORNER DETAIL — SCALE: 3" = 1'-0" — 13

1. FOR OPTIONAL METAL STUD FRAMING, SEE S9.0-S9.2.
2. ADDITIONAL R-5 RIGID INSULATION REQUIRED @ METAL STUD WALLS. REFER TO MINIMUM INSULATION SCHEDULES ON SHEET M1.7. & DETAIL 18/-
3. FOR FINISH OPTIONS, SEE SHEET A7.0.
4. REFER TO SHEET A7.3 FOR ALL BUILDING INSULATION INSTALLATION NOT SHOWN OR NOTED ON DETAIL ON THIS SHEET.
5. FOR BUILDINGS 2160 SQ. FT. OR LESS & ALL BUILDINGS INSTALLED ON ABOVE GRADE FOUNDATIONS PER 1A/S1.4 , FLASHING SHALL BE PROVIDED PER DETAILS 10 & 19/-.
6. FOR BUILDINGS LARGER THAN 2160 SQ. FT. INSTALLED ON BELOW GRADE FOUNDATIONS PER 1/S1.4, FLASHING & DETERIORATION PROTECTION SHALL BE PROVIDED PER SHEET S5.5A. WHERE DETERIORATION PROTECTION IS NOT REQUIRED BY THE SHEET NOTES OF SHEET A5.5A, FLASHING SHALL BE PROVIDED BY DETAIL 10 & 19/-.
7. LAP SIDING SPECIFICATIONS - FACTORY PRIMED FIBER CEMENT BOARDS - 12' LENGTH X 4"-10-3/4" PLANKS. ASTM-D3359 & ASTM-E136 TESTED - INSTALLATION PER MANUFACTURER'S INSTRUCTIONS. PLANKS SHALL BE ATTACHED WITH 8D RING SHANK GALVANIZED NAILS TO EACH STUD (16" O.C.).
8. FLAME SPREAD OF 0 (ASTM E84) & SMOKE DEVELOPMENT OF LESS THAN 5 PER ASTM E84

SHEET NOTES

NOT USED — 17

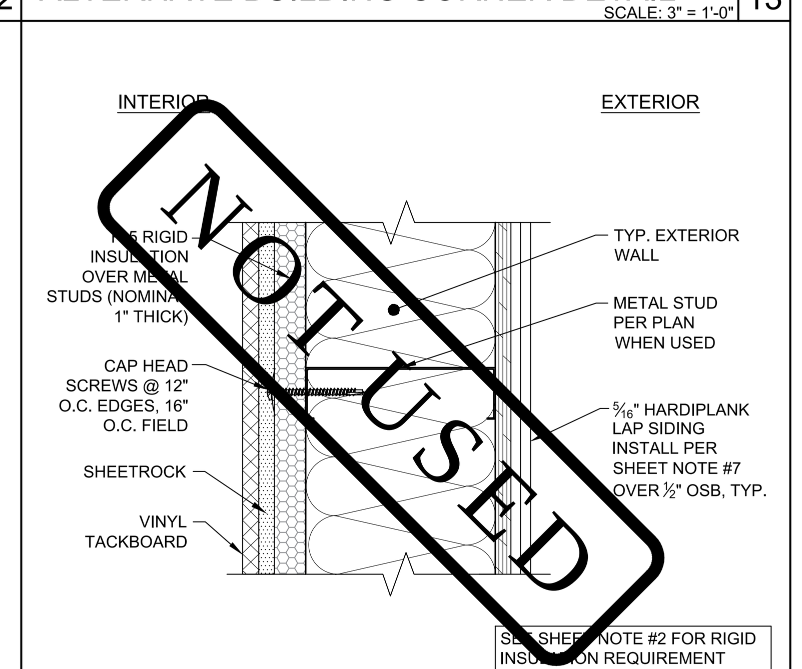

RIGID INSULATION @ METAL STUDS — SCALE: 3" = 1'-0" — 18

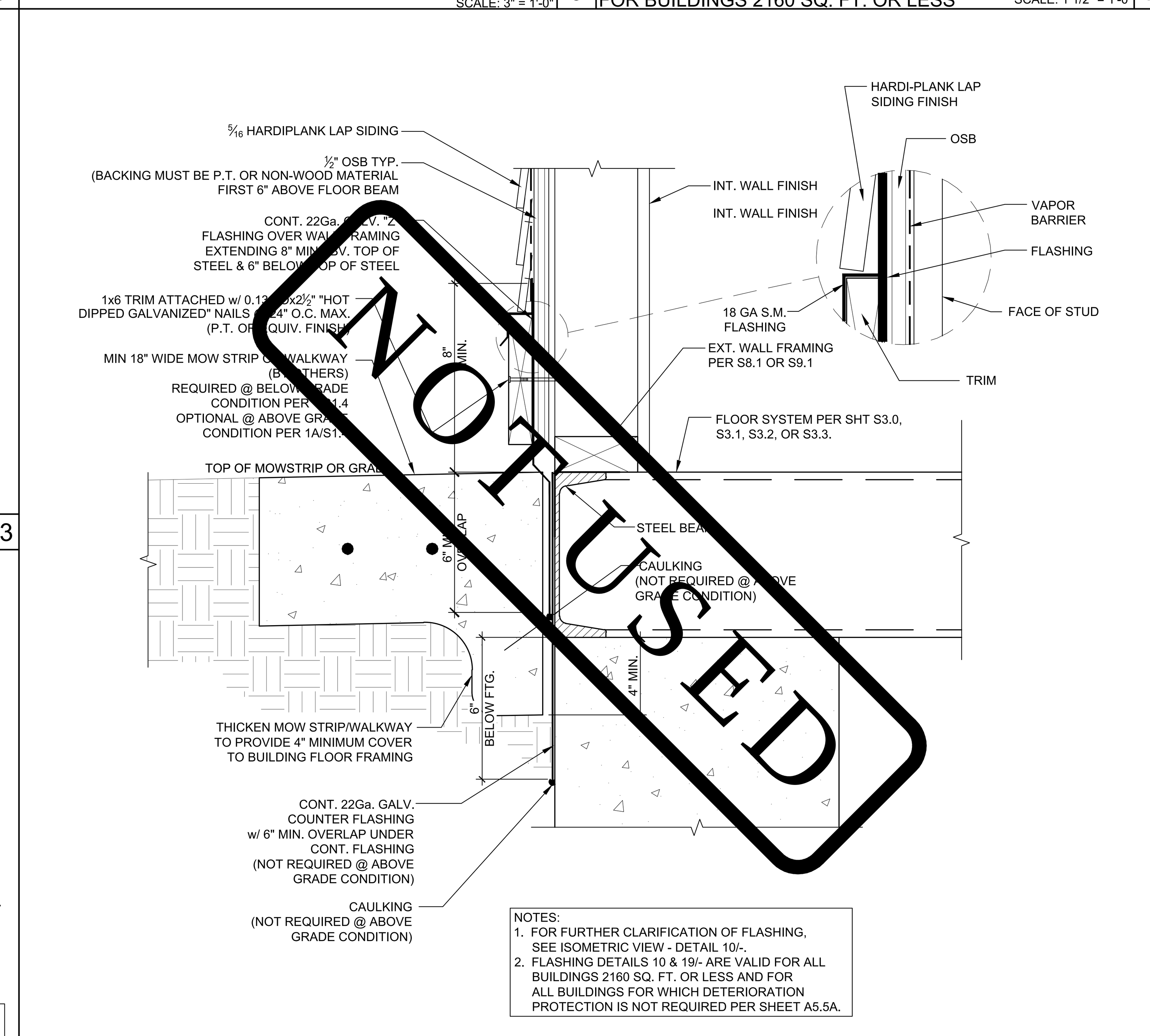

NOTES:
1. FOR FURTHER CLARIFICATION OF FLASHING, SEE ISOMETRIC VIEW - DETAIL 10/-.
2. FLASHING DETAILS 10 & 19/- ARE VALID FOR ALL BUILDINGS 2160 SQ. FT. OR LESS AND FOR ALL BUILDINGS FOR WHICH DETERIORATION PROTECTION IS NOT REQUIRED PER SHEET A5.5A.

FLASHING DETAIL FOR BUILDINGS 2160 SQ. FT. OR LESS — SCALE: 3" = 1'-0" — 19

IDENTIFICATION STAMP
DIV. OF THE STATE ARCHITECT
APP: 03-124589 INC:
REVIEWED FOR
SS ☑ FLS ☑ ACS ☑
DATE: 04/15/2025

American Modular Systems
787 Spreckels Ave., Manteca, CA 95336
Phone (209) 825-1921 Fax (209) 825-7018
www.americanmodular.com

INTELLECTUAL-PROPERTY & PROPRIETARY RIGHTS STATEMENT
COPYRIGHT © AMERICAN MODULAR SYSTEMS (AMS)
AMS OWNS ALL COPYRIGHT AND OTHER INTELLECTUAL-PROPERTY AND PROPRIETARY RIGHTS IN THESE DRAWINGS, SPECIFICATIONS, AND THE MATERIAL CONTAINED HEREIN. CERTAIN ELEMENTS SHOWN IN THESE DOCUMENTS ARE REGISTERED TRADEMARKS OF AMS. ALL PATENTABLE MATERIALS CONTAINED IN THESE DOCUMENTS AND ORIGINATING WITH AMS WILL REMAIN THE SOLE PROPERTY OF AMS. THESE DRAWING, SPECIFICATIONS, AND THE MATERIAL CONTAINED HEREIN MAY NOT BE REPRODUCED, TRANSMITTED, COPIED, DISTRIBUTED, MODIFIED, OR OTHERWISE DISPOSED OF (DIRECTLY OR INDIRECTLY) AND MAY NOT BE USED (IN WHOLE OR IN PART) TO ASSIST IN THE CONSTRUCTION, DESIGN, OR OTHER MAKING OF, OR FOR THE PURPOSE OF FURNISHING ANY INFORMATION FOR THE CONSTRUCTION, DESIGN, OR OTHER MAKING OF, ANY BUILDINGS (MODULAR OR OTHERWISE), DRAWINGS, SPECIFICATIONS, PRINTS, APPARATUS, OR PARTS THEREOF, EXCEPT AS EXPRESSLY PERMITTED BY WRITTEN CONSENT OF, OR IN A WRITTEN AGREEMENT WITH, AMS. SUBMITTAL OR DISTRIBUTION TO MEET OFFICIAL REGULATORY REQUIREMENTS WILL NOT BE CONSTRUED AS PUBLICATION IN DEROGATION OF AMS'S COPYRIGHT OR OTHER INTELLECTUAL-PROPERTY OR PROPRIETARY RIGHTS.

PRE-CHECKED SET NAME
24' x 40' THRU 120' x 40'
STANDARD MODULAR BUILDING
(HIGH SEISMIC)
FORM

SITE SPECIFIC PROJECT NAME
VENTURA COLLEGE
(1) 72'x40' BUILDING

APPROVED
DIV. OF THE STATE ARCHITECT
APP: 04-122051 PC
REVIEWED FOR
SS ☑ FLS ☑ ACS ☑ CG ☑
DATE: 04/03/2024

☒ 2022 CBC PRE-CHECK (PC) DOCUMENT
A SEPARATE PROJECT APPLICATION FOR CONSTRUCTION IS REQUIRED.

MANUFACTURER PROFESSIONAL OF RECORD ON PC
LICENSED ARCHITECT
RANDAL PATRICK CAVANAGH
No. C12631
Ren. 3-31-25
STATE OF CALIFORNIA

THESE DRAWINGS ARE PRELIMINARY AND NOT FOR CONSTRUCTION UNLESS STAMPED & SIGNED BY THE DESIGN PROFESSIONAL OF RECORD.

REVISIONS
1
2
3
4

DRAWN BY:	AA
SCALE:	AS NOTED
DATE:	MM/DD/YY
PROJECT NO:	XXXX-22

SHEET TITLE:
TYP. ARCHITECTURAL DETAILS - LAP SIDING OPTION

SHEET NUMBER:
A5.5

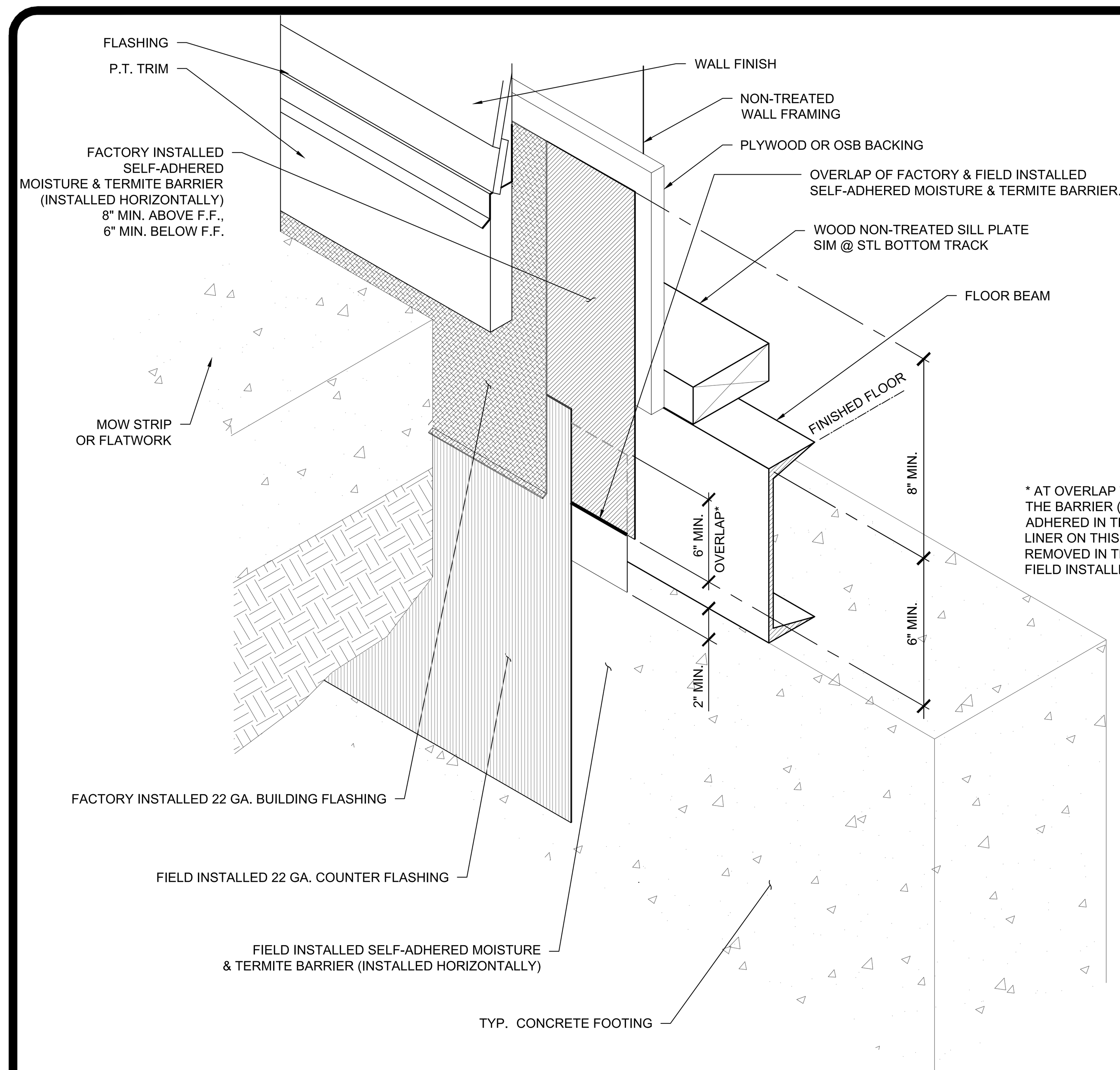

* AT OVERLAP THE BOTTOM PORTION OF THE BARRIER (6" MIN.) SHALL NOT BE ADHERED IN THE FACTORY. THE BACKING LINER ON THIS PORTION SHALL BE REMOVED IN THE FIELD SO THAT THE LAP IS FIELD INSTALLED.

ISOMETRIC VIEW

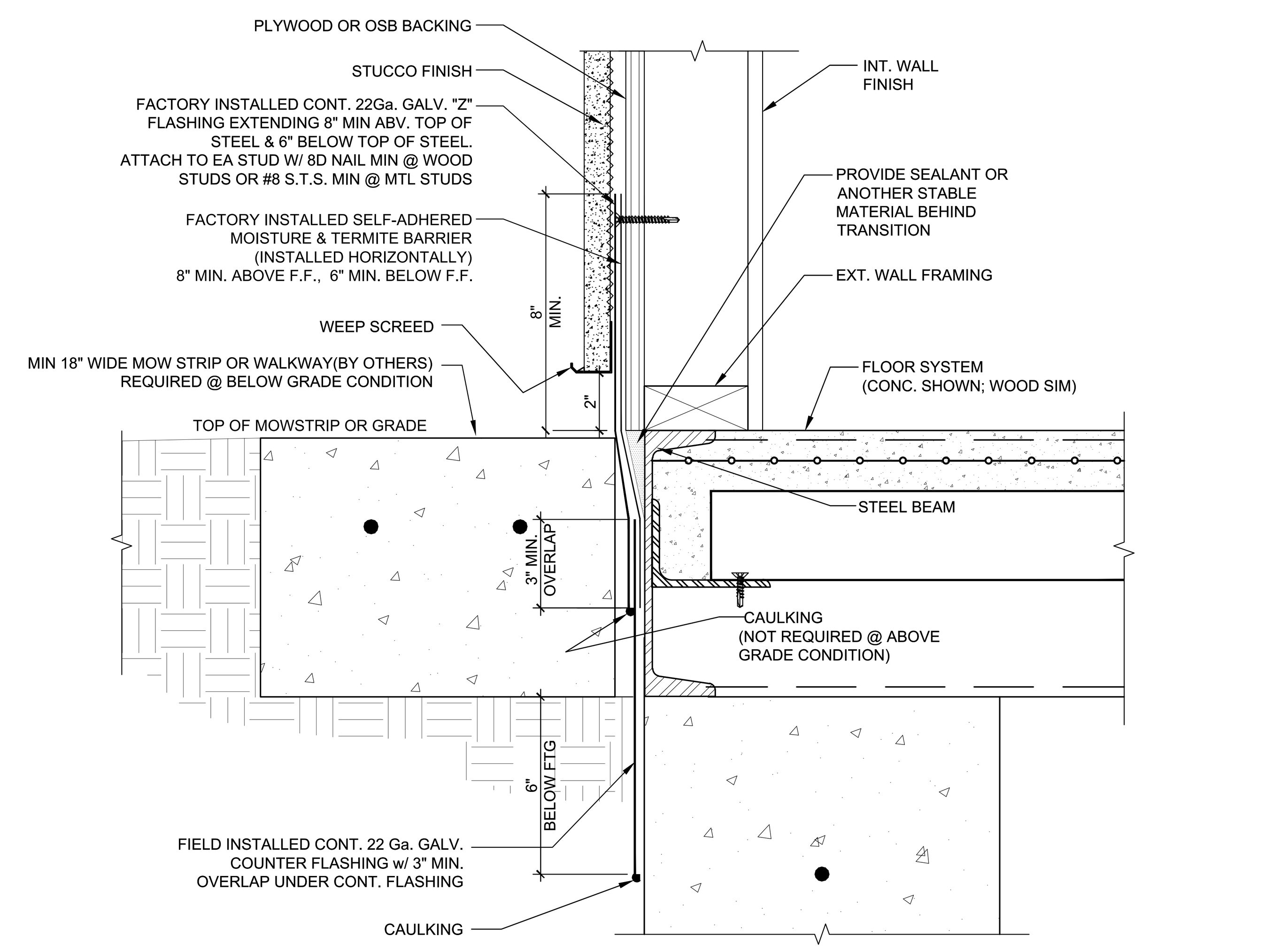

NOTE:
SEE NOTES IN DETAIL 2/- FOR DETERIORATION PROTECTION REQUIREMENTS.
SEE NOTES IN DETAIL 7/- FOR DETERIORATION PROTECTION MATERIALS.

NOTE: WATER RESISTIVE BARRIER (BUILDING PAPER) AND POLYGUARD MEMBRANE (MOISTURE & TERMITE BARRIER) NOT SHOWN IN SECTION FOR CLARITY. REFER TO ISOMETRIC VIEW FOR POLYGUARD MEMBRANE.

SECTION VIEW

DETERIORATION PROTECTION 1

MOISTURE AND TERMITE BARRIER MEMBRANE INSTALLATION REQUIREMENTS

- ALL SURFACES SHALL BE CLEAN (FREE OF DIRT, DUST, OIL AND OTHER DEBRIS) PRIOR TO APPLICATION OF THE ADHESIVE AND MEMBRANE.
- ALL SURFACE VOIDS GREATER THAN 1/8" IN WIDTH SHALL BE FILLED WITH SEALANT PRIOR TO INSTALLATION.
- APPLY LIQUID ADHESIVE TO ALL SURFACES WHICH WILL RECEIVE THE POLY-GUARD BARRIER.
- CUT PIECES OF MEMBRANE TO LENGTH AS NEEDED AND APPLY TO SUBSTRATE ONCE THE LIQUID ADHESIVE HAS BECOME TACKY. IMMEDIATELY PRIOR TO MEMBRANE APPLICATION, THE INSTALLER SHALL VERIFY THAT THE ADHESIVE IS STILL TACKY TO THE TOUCH, IF NECESSARY A SECOND LAYER OF ADHESIVE SHALL BE PROVIDED.
- INSTALL MEMBRANE IN A HORIZONTAL ORIENTATION.
- WHERE A HORIZONTAL LAP OCCURS IN THE SELF-ADHERED BARRIER, THE JOINTS SHALL BE LAPPED 2 1/2 INCHES MINIMUM.
- AT BUILDING CORNERS THE MEMBRANE SHALL BE WRAPPED AROUND THE CORNER AND SHALL EXTEND NO LESS THAN 6" BEYOND THE CORNER PRIOR TO LAPPING ANOTHER SHEET, SEE DETAIL 9/-.
- WHERE A MODULE JOINT (MODLINE) OCCURS THE FACTORY INSTALLED MEMBRANE SHALL BE TERMINATED AS SHOWN ON DETAIL 4\-. A FIELD INSTALLED MEMBRANE PIECE SHALL BE APPLIED FOLLOWING THE INSTALLATION OF THE MODULES ON THE FOUNDATION. THE FIELD INSTALLED MEMBRANE PIECE SHALL LAP THE FACTORY INSTALLED MEMBRANE 3" MINIMUM AT EACH END.
- WHERE A VERTICAL LAP OCCURS THE UPPER MEMBRANE LAYER SHALL BE LAPPED OVER THE LOWER MEMBRANE LAYER 6" MINIMUM.
- THE MEMBRANE SHALL BE ROLLED FIRMLY INTO PLACE USING HAND ROLLER.
- APPLY MASTIC OR SEALANT TO TERMINATING EDGES AND AROUND PIPES OR OTHER PENETRATIONS.
- WHERE THE SURFACES ARE OFFSET MORE THAN 1/8" OUT-OF-PLANE PROVIDE SEALANT OR ANOTHER STABLE MATERIAL TO TRANSITION BETWEEN THE SURFACES.
- WHERE A HORIZONTAL LAP OCCURS IN THE GALVANIZED FLASHING THE JOINTS SHALL BE LAPPED 2 1/2" MINIMUM
- REFER TO DETAIL 4/- FOR MODLINE DETERIORATION PROTECTION

REPAIR REQUIREMENTS
WHERE DAMAGE OCCURS, THE REPAIRS SHALL BE AS FOLLOWS:

1. WHERE THE DAMAGE MEASURES LESS THAN ½" IN ANY DIRECTION THE PUNCTURE SHALL BE SEALED WITH MASTIC.
2. WHERE THE DAMAGE MEASURES MORE THAN ½", BUT LESS THAN 2", IN ANY DIRECTION A PATCH SHALL BE INSTALLED OVER THE DAMAGE USING THE SAME MEMBRANE MATERIAL. THE PATCH SHALL OVERLAP 4" MINIMUM IN ALL DIRECTION.
3. WHERE THE DAMAGE MEASURES MORE THAN 2" IN ANY DIRECTION THE DAMAGED PORTION SHALL BE REMOVE AND A PIECE OF MEMBRANE SHALL BE INSTALLED. THE PATCH SHALL OVERLAP 4" MINIMUM IN ALL DIRECTIONS.

INSPECTION REQUIREMENTS
THE IN-PLANT INSPECTOR SHALL OBSERVE THE INSTALLATION OF FACTORY INSTALLED PORTION OF THE MEMBRANE FLASHING. THE ADHESIVE AND MEMBRANE SHALL BE INSTALLED IN ACCORDANCE WITH THESE INSTALLATION INSTRUCTIONS. ALL OVERLAPS SHALL BE AS INDICATED WITHIN THIS DRAWING PACKAGE. THE MEMBRANE SHALL BE CONTINUOUS UP THE WALL TO A MINIMUM HEIGHT ABOVE FINISH FLOOR AS INDICATED WITHIN THIS DRAWING PACKAGE.

THE ON-SITE INSPECTOR SHALL OBSERVE THE INSTALLATION OF THE SITE INSTALLED PORTION OF THE MEMBRANE FLASHING. THE FACTORY INSTALLED MEMBRANE SHOULD BE INVESTIGATED TO DETERMINE IF ANY DAMAGE OCCURRED DURING MODULE SHIPMENT/INSTALLATION PRIOR TO PROCEEDING WITH THE SITE INSTALLED MEMBRANE PLACEMENT. THE ADHESIVE AND MEMBRANE SHALL BE INSTALLED IN ACCORDANCE WITH THESE INSTALLATION INSTRUCTIONS. ALL OVERLAPS SHALL BE AS INDICATED WITHIN THIS DRAWING PACKAGE. THE MEMBRANE SHALL BE LAPPED ONTO THE FOUNDATION WALL AS INDICATED WITHIN THIS DRAWING PACKAGE. THE GALVANIZED FLASHING SHALL BE INSTALLED OVER THE MEMBRANE. THE GALVANIZED FLASHING SHALL BE CONTINUOUS UP THE WALL TO A MINIMUM HEIGHT ABOVE FINISH FLOOR AS INDICATED WITHIN THIS DRAWING PACKAGE AND SHALL CONTINUE BELOW THE BOTTOM OF THE FLATWORK OR MOW STRIP AS INDICATED WITHIN THIS DRAWING PACKAGE.

DETERIORATION PROTECTION REQUIREMENTS 2

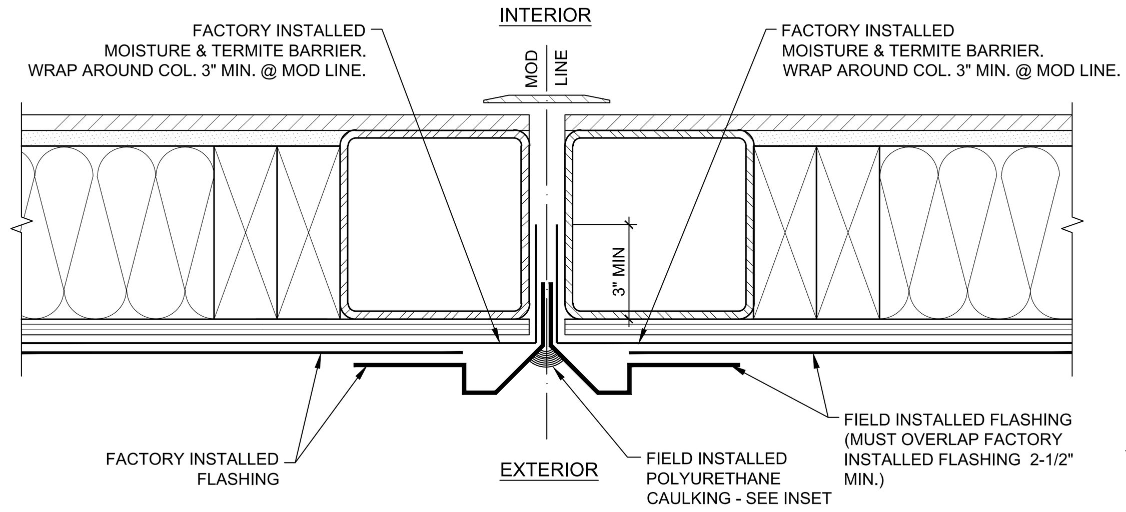

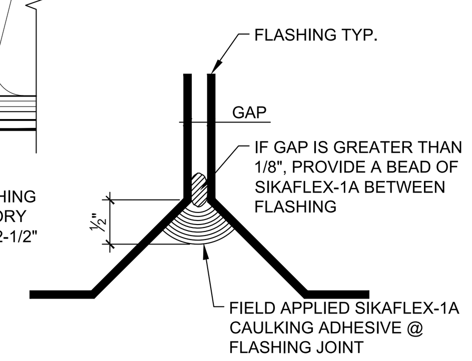

INSET DETAIL

NOTES:
1. SHOWN SLIGHTLY EXPLODED AT MODLINE FOR CLARITY.
2. SEE DETAIL 1/- FOR REQUIRED HEIGHT OF BARRIER AND FLASHING ON WALL.
3. UTILIZE TYPICAL BUILDING DETAILS FOR MOD LINE FINISHING ABOVE DETERIORATION PROTECTION.
4. WALL FINISH NOT SHOWN FOR CLARITY.

DETERIORATION PROTECTION DETAIL @ MOD LINE 4
SCALE: 3" = 1'-0"

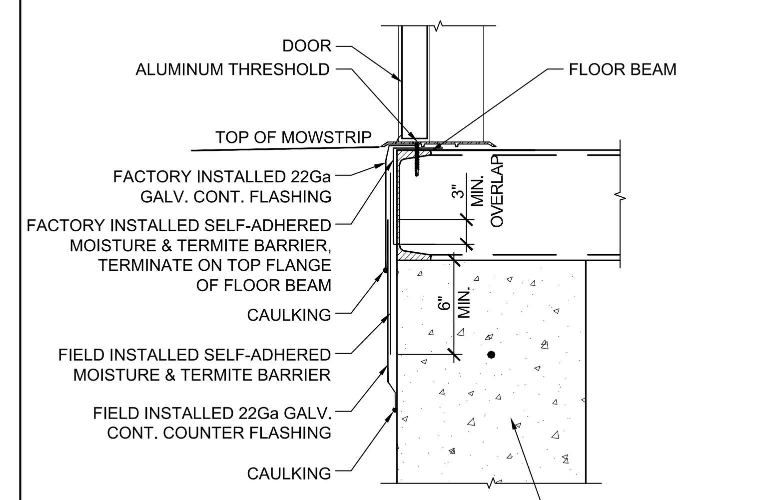

NOTE:
SEE DETAIL 1/- FOR ALL ITEMS NOT SHOWN OR NOTED.

DETERIORATION PROTECTION @ THRESHOLD 5
SCALE: 1-1/2" = 1'-0"

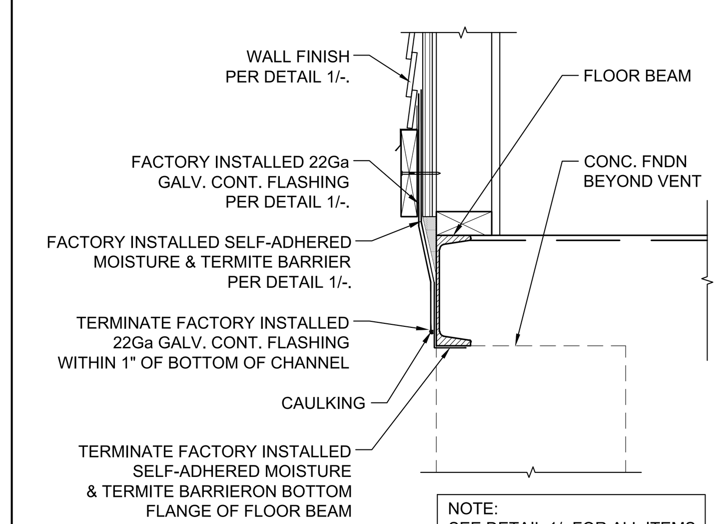

NOTE:
SEE DETAIL 1/- FOR ALL ITEMS NOT SHOWN OR NOTED.

DETERIORATION PROTECTION @ VENT ACCESS 6
SCALE: 1-1/2" = 1'-0"

MATERIALS USED FOR DETERIORATION PROTECTION SHALL BE AS FOLLOWS:

1. FACTORY INSTALLED SELF-ADHERED TERMITE BARRIER SHALL BE "POLYGUARD TERM" FLASHING MOISTURE/TERMITE BARRIER. WITH FOIL FACE UV BARRIER.
2. FIELD INSTALLED SELF-ADHERED TERMITE BARRIER SHALL BE "POLYGUARD TERM" WATER TERMITE/BARRIER FOR CONCRETE FOUNDATIONS.
3. LIQUID ADHESIVE SHALL BE "POLYGUARD" 650WB.
4. ALL FLASHING TO BE 22 GA FLASHING G60 COATING MIN., TYP.

DETERIORATION PROTECTION MATERIALS 7

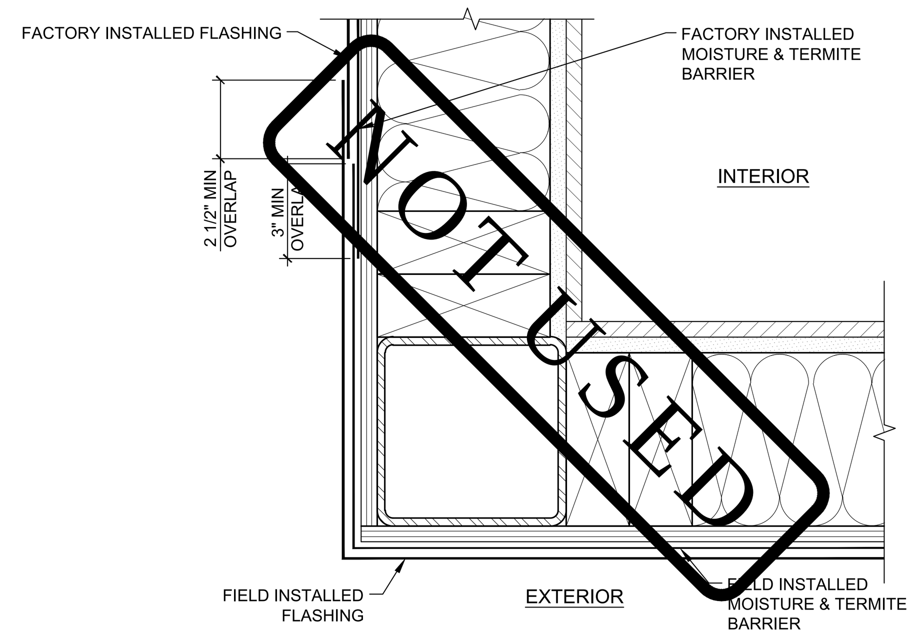

DETERIORATION PROTECTION DETAIL @ CORNER 9
SCALE: 3" = 1'-0"

NOT USED 10

NOT USED 11

1. DETERIORATION DETAILS SHOWN ON THIS SHEET ARE NOT REQUIRED FOR BUILDINGS 2160 SQ. FT. OR LESS.
2. DETERIORATION DETAILS SHOWN ON THIS SHEET ARE ONLY REQUIRED FOR BUILDINGS INSTALLED WITH BELOW GRADE FOUNDATIONS.
3. DETERIORATION DETAILS SHOWN ON THIS SHEET ARE NOT REQUIRED FOR BUILDINGS WITH CONCRETE FLOORS & MTL STUDS WHERE ALL WALL FINISHES AND BACKING ARE P.T. OR NON-WOOD MATERIAL.
4. THE DETERIORATION DETAILS SHOWN ON THIS SHEET SHALL BE USED AT THE BUILDINGS PERIMETER & SHALL EXTEND VERTICALLY UP THE WALL TO THE MIN. HEIGHT REQUIRED PER DETAIL 1/-. THE TYPICAL BUILDING DETAILS FOR MOD LINE FINISHING MAY BE USED ABOVE THAT POINT.

SHEET NOTES 12

IDENTIFICATION STAMP
DIV. OF THE STATE ARCHITECT
APP: 03-124589 INC:
REVIEWED FOR
SS ☑ FLS ☑ ACS ☑
DATE: 04/15/2025

American Modular Systems
787 Spreckels Ave., Manteca, CA 95336
Phone (209) 825-1921 Fax (209) 825-7018
www.americanmodular.com

INTELLECTUAL-PROPERTY & PROPRIETARY RIGHTS STATEMENT
COPYRIGHT © AMERICAN MODULAR SYSTEMS (AMS)
AMS OWNS ALL COPYRIGHT AND OTHER INTELLECTUAL-PROPERTY AND PROPRIETARY RIGHTS IN THESE DRAWINGS, SPECIFICATIONS, AND THE MATERIAL CONTAINED HEREIN. CERTAIN ELEMENTS SHOWN IN THESE DOCUMENTS ARE REGISTERED TRADEMARKS OF AMS. ALL PATENTABLE MATERIALS CONTAINED IN THESE DOCUMENTS AND ORIGINATING WITH AMS WILL REMAIN THE SOLE PROPERTY OF AMS. THESE DRAWING, SPECIFICATIONS, AND THE MATERIAL CONTAINED HEREIN MAY NOT BE REPRODUCED, TRANSMITTED, COPIED, DISTRIBUTED, MODIFIED, OR OTHERWISE DISPOSED OF (DIRECTLY OR INDIRECTLY) AND MAY NOT BE USED (IN WHOLE OR IN PART) TO ASSIST IN THE CONSTRUCTION, DESIGN, OR OTHER MAKING OF, OR FOR THE PURPOSE OF FURNISHING ANY INFORMATION FOR THE CONSTRUCTION, DESIGN, OR OTHER MAKING OF, ANY BUILDINGS (MODULAR OR OTHERWISE), DRAWINGS, SPECIFICATIONS, PRINTS, APPARATUS, OR PARTS THEREOF, EXCEPT AS EXPRESSLY PERMITTED BY WRITTEN CONSENT OF, OR IN A WRITTEN AGREEMENT WITH, AMS. SUBMITTAL OR DISTRIBUTION TO MEET OFFICIAL REGULATORY REQUIREMENTS WILL NOT BE CONSTRUED AS PUBLICATION IN DEROGATION OF AMS'S COPYRIGHT OR OTHER INTELLECTUAL-PROPERTY OR PROPRIETARY RIGHTS.

PRE-CHECKED SET NAME
24' x 40' THRU 120' x 40' STANDARD MODULAR BUILDING (HIGH SEISMIC)
FORM

SITE SPECIFIC PROJECT NAME
VENTURA COLLEGE
(1) 72'x40' BUILDING

APPROVED
DIV. OF THE STATE ARCHITECT
APP: 04-122051 PC
REVIEWED FOR
SS ☑ FLS ☑ ACS ☑ CG ☑
DATE: 04/03/2024

☒ 2022 CBC PRE-CHECK (PC) DOCUMENT
A SEPARATE PROJECT APPLICATION FOR CONSTRUCTION IS REQUIRED.

MANUFACTURER PROFESSIONAL OF RECORD ON PC

LICENSED ARCHITECT
RANDAL PATRICK CAVANAGH
No. C12631
Ren. 3-31-25
STATE OF CALIFORNIA

THESE DRAWINGS ARE PRELIMINARY AND NOT FOR CONSTRUCTION UNLESS STAMPED & SIGNED BY THE DESIGN PROFESSIONAL OF RECORD.

REVISIONS
1
2
3
4

DRAWN BY:	AA
SCALE:	AS NOTED
DATE:	MM/DD/YY
PROJECT NO:	XXXX-22

SHEET TITLE:
DETERIORATION DETAILS GREATER THAN 2160 SQ. FT. - LAP SIDING OPTION

SHEET NUMBER:
A5.5A

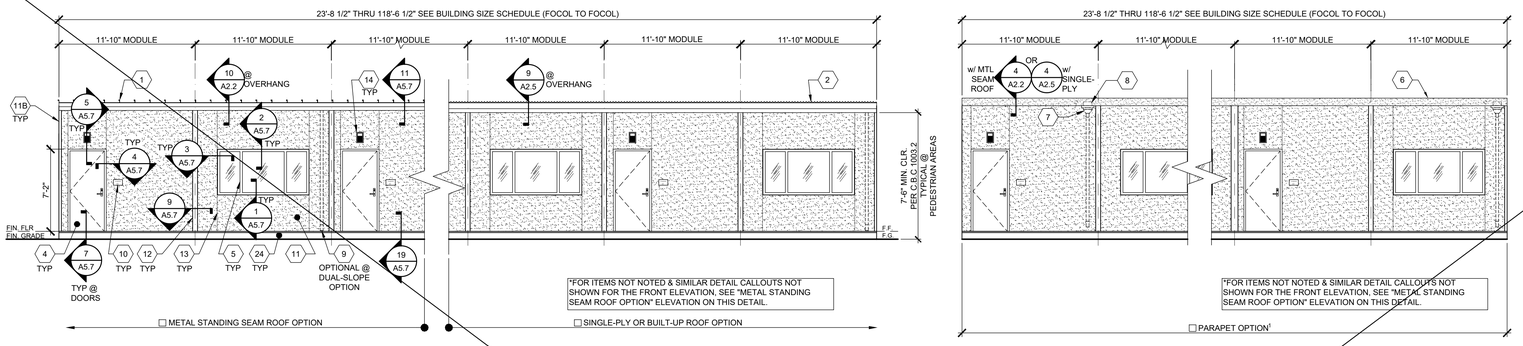

NOTES:
1. METAL STANDING SEAM OR SINGLE-PLY/BUILT-UP MAY BE USED WITH PARAPET OPTION.

EXTERIOR ELEVATION - FRONT

SCALE : 3/16"=1'-0" | 1

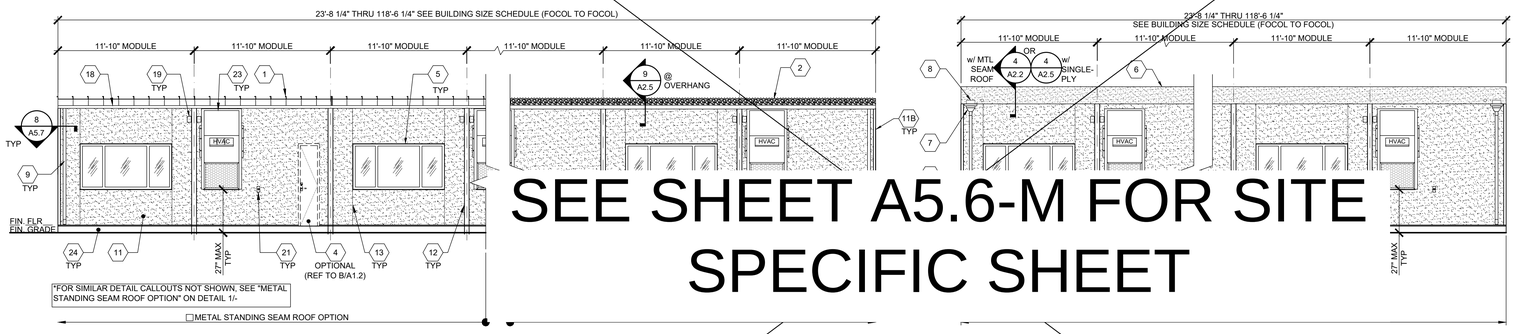

NOTES:
1. METAL STANDING SEAM OR SINGLE-PLY/BUILT-UP MAY BE USED WITH PARAPET OPTION.
2. WHEN ELEMENTS HIGHER THAN +27" ABOVE FINISH GRADE PROJECT MORE THAN 4" INTO CIRCULATION AREAS (INCLUDING GRASS PLAY AREAS), THAN CANE-DETECTION ELEMENTS WILL BE REQUIRED

EXTERIOR ELEVATION - REAR

SCALE : 3/16"=1'-0" | 2

SEE SHEET A5.6-M FOR SITE SPECIFIC SHEET

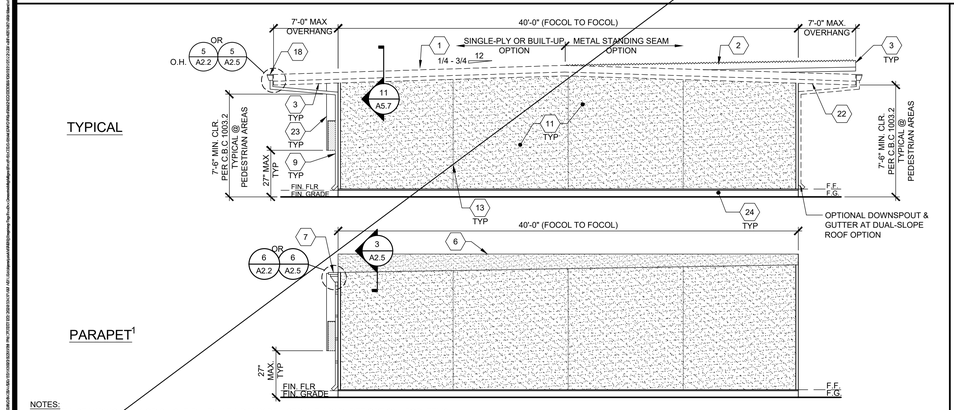

NOTES:
1. METAL STANDING-SEAM OR SINGLE-PLY/BUILT-UP MAY BE USED WITH PARAPET OPTION. FOR ITEMS NOT NOTED, SEE "TYPICAL" ELEVATION SHOWN ABOVE.
2. WHEN ELEMENTS HIGHER THAN +27" ABOVE FINISH GRADE PROJECT MORE THAN 4" INTO CIRCULATION AREAS (INCLUDING GRASS PLAY AREAS), THAN CANE-DETECTION ELEMENTS WILL BE REQUIRED

EXTERIOR ELEVATION - LEFT

SCALE : 3/16"=1'-0" | 3

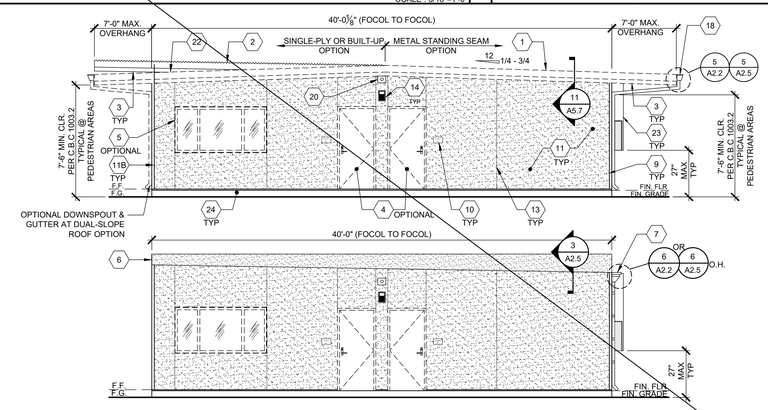

NOTES:
1. METAL STANDING SEAM OR SINGLE-PLY/BUILT-UP MAY BE USED WITH PARAPET OPTION. FOR ITEMS NOT NOTED, SEE "TYPICAL" ELEVATION SHOWN ABOVE.
2. WHEN ELEMENTS HIGHER THAN +27" ABOVE FINISH GRADE PROJECT MORE THAN 4" INTO CIRCULATION AREAS (INCLUDING GRASS PLAY AREAS), THAN CANE-DETECTION ELEMENTS WILL BE REQUIRED

EXTERIOR ELEVATION - RIGHT

SCALE : 3/16"=1'-0" | 4

1. STANDING SEAM METAL ROOFING
2. SINGLE-PLY ROOFING
3. OVERHANG - SEE STRUCTURAL
4. TYP EXTERIOR DOOR - SEE SCHEDULE SHEET N3.0
5. WINDOW - SEE SCHEDULE SHEET N3.0
6. OPTIONAL PARAPET - SEE SHEET S4.3
7. SCUPPER @ PARAPET OPTION - SEE DETAIL 6/A2.5
8. 4"x4" MIN. SCUPPER BOX @ PARAPET OPTION - SEE DETAIL 6 & 14/A2.5
9. DOWNSPOUT SEE DETAIL 8/A5.1 FOR ATTACHMENT
10. ROOM ID AND ISA SIGNAGE (BY OTHER) SEE DETAILS 5 & 9/N4.0 - TYP
11. SYNTHETIC STUCCO TEXTURED FINISH
11A. 1x4 WINDOW TRIM
11B. 22 GA. CORNER FLASHING
12. 16 GA. FLASHING TRIM
13. CONTROL JOINT (LOCATION MAY VARY) - SIMILAR DETAIL 9/A5.3 @ STUDS
14. EXTERIOR LIGHT - SEE ELECTRICAL
15. NOT USED
16. NOT USED
17. NOT USED
18. GUTTER - SEE ATTACHMENT DETAIL 5/A2.2 AT STANDING SEAM ROOFING, OR 5/A2.5 AT SINGLE-PLY / BUILT-UP ROOFING
19. MODULAR IDENTIFICATION TAG +90" ABOVE A.F.F.
20. FIRE ALARM HORN(BY OTHERS)-REFER TO ELECTRICAL PLANS
21. WP/G.F.C.I. @ HVAC UNITS - REFER TO ELECTRICAL PLANS
22. DUAL SLOPE OPTION
23. HVAC UNIT
24. SHEET METAL FLASHING PAINTED BODY COLOR

KEYNOTES

BUILDING SIZE SCHEDULE

BUILDING SIZE (FT)	TOTAL # OF 12'-0" WIDE MODULES	TOTAL # OF CENTER MODULES	OVERALL BUILDING WIDTH
24'x40'	2	0	23'-4½"
36'x40'	3	1	35'-4½"
48'x40'	4	2	47'-5"
60'x40'	5	3	59'-5½"
72'x40'	6	4	71'-5½"
84'x40'	7	5	82'-11½"
96'x40'	8	6	94'-10"
108'x40'	9	7	106'-4½"
120'x40'	10	8	118'-4½"

NOTES:
1. TOTAL BUILDING WIDTH INCLUDES ½" PER MODULE CONSTRUCTION TOLERANCE PER FOUNDATION SHEETS S1.0, S1.1, S1.2 & S1.3.

BUILDING SIZE SCHEDULE

IDENTIFICATION STAMP
DIV. OF THE STATE ARCHITECT
APP: 03-124589 INC:
REVIEWED FOR
SS ☑ FLS ☑ ACS ☑
DATE: 04/15/2025

AMS®
American Modular Systems
787 Spreckels Ave., Manteca, CA 95336
Phone (209) 825-1921 Fax (209) 825-7018
www.americanmodular.com

INTELLECTUAL-PROPERTY & PROPRIETARY RIGHTS STATEMENT
COPYRIGHT © AMERICAN MODULAR SYSTEMS (AMS)
AMS OWNS ALL COPYRIGHT AND OTHER INTELLECTUAL-PROPERTY AND PROPRIETARY RIGHTS IN THESE DRAWINGS, SPECIFICATIONS, AND THE MATERIAL CONTAINED HEREIN. CERTAIN ELEMENTS SHOWN IN THESE DOCUMENTS ARE REGISTERED TRADEMARKS OF AMS. ALL PATENTABLE MATERIALS CONTAINED IN THESE DOCUMENTS AND ORIGINATING WITH AMS WILL REMAIN THE SOLE PROPERTY OF AMS. THESE DRAWINGS, SPECIFICATIONS, AND THE MATERIAL CONTAINED HEREIN MAY NOT BE REPRODUCED, TRANSMITTED, COPIED, DISTRIBUTED, MODIFIED, OR OTHERWISE DISPOSED OF (DIRECTLY OR INDIRECTLY) AND MAY NOT BE USED (IN WHOLE OR IN PART) TO ASSIST IN THE CONSTRUCTION, DESIGN, OR OTHER MAKING OF, OR FOR THE PURPOSE OF FURNISHING ANY INFORMATION FOR THE CONSTRUCTION, DESIGN, OR OTHER MAKING OF, ANY BUILDINGS (MODULAR OR OTHERWISE), DRAWINGS, SPECIFICATIONS, PRINTS, APPARATUS, OR PARTS THEREOF, EXCEPT AS EXPRESSLY PERMITTED BY WRITTEN CONSENT OF, OR IN A WRITTEN AGREEMENT WITH, AMS. SUBMITTAL OR DISTRIBUTION TO MEET OFFICIAL REGULATORY REQUIREMENTS WILL NOT BE CONSTRUED AS PUBLICATION IN DEROGATION OF AMS'S COPYRIGHT OR OTHER INTELLECTUAL-PROPERTY OR PROPRIETARY RIGHTS.

PRE-CHECKED SET NAME
24' x 40' THRU 120' x 40'
STANDARD MODULAR BUILDING
(HIGH SEISMIC)
FORM®

SITE SPECIFIC PROJECT NAME

APPROVED
DIV. OF THE STATE ARCHITECT
APP: 04-122051 PC
REVIEWED FOR
SS ☑ FLS ☑ ACS ☑ CG ☑
DATE: 04/03/2024

☐ 2022 CBC PRE-CHECK (PC) DOCUMENT
A SEPARATE PRE-REVIEW AND CERTIFICATE OF CONSTRUCTION IS REQUIRED

MANUFACTURER PROFESSIONAL OF RECORD ON PC

LICENSED ARCHITECT
PATRICK MANGAN
No. C12631
Ren. 3-31-25
STATE OF CALIFORNIA

THESE DRAWINGS ARE PRELIMINARY AND NOT FOR CONSTRUCTION UNLESS STAMPED & SIGNED BY THE DESIGN PROFESSIONAL OF RECORD.

REVISIONS
1
2
3
4

DRAWN BY:	AA
SCALE:	AS NOTED
DATE:	MM/DD/YY
PROJECT NO:	XXXX-22

SHEET TITLE:
TYPICAL EXTERIOR ELEVATIONS - SYNTHETIC STUCCO OPTION

SHEET NUMBER:
A5.6

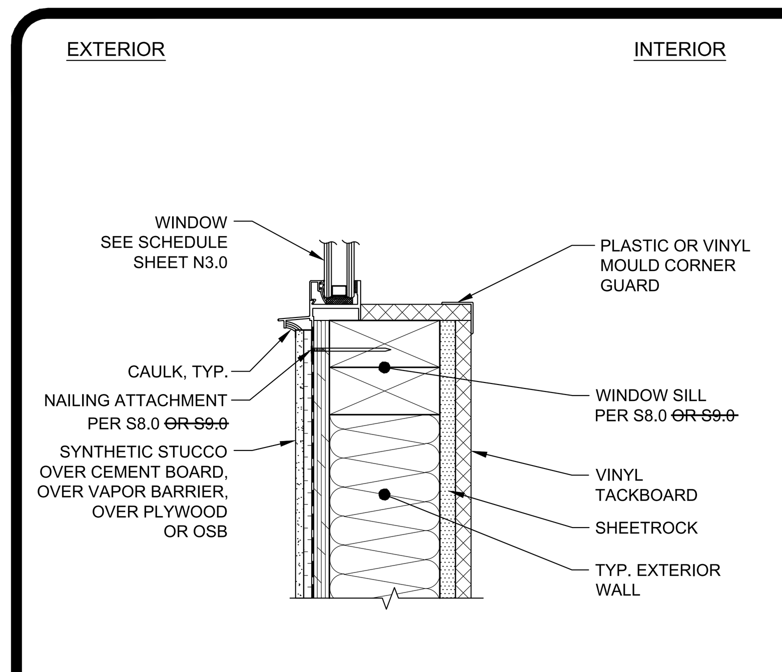

TYPICAL WINDOW SILL SCALE: 3" = 1'-0" 1

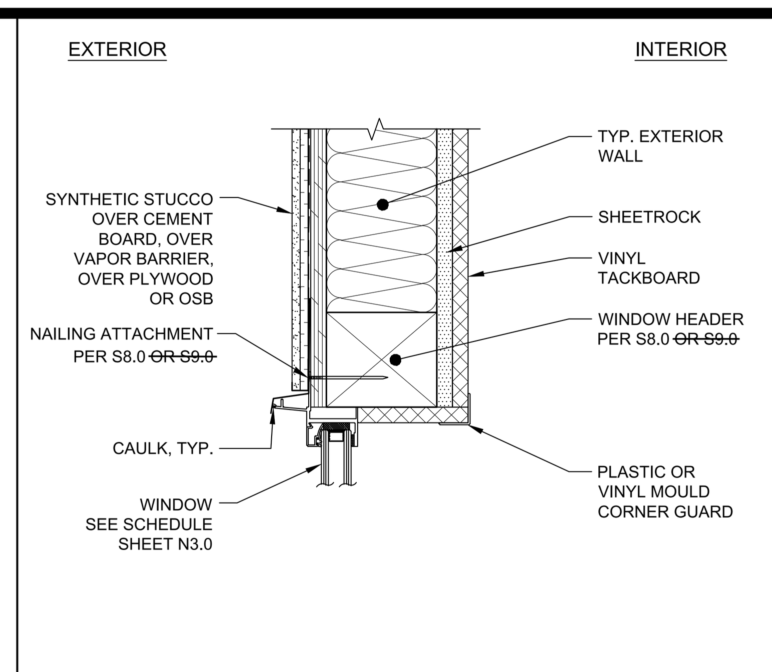

TYPICAL WINDOW HEADER SCALE: 3" = 1'-0" 2

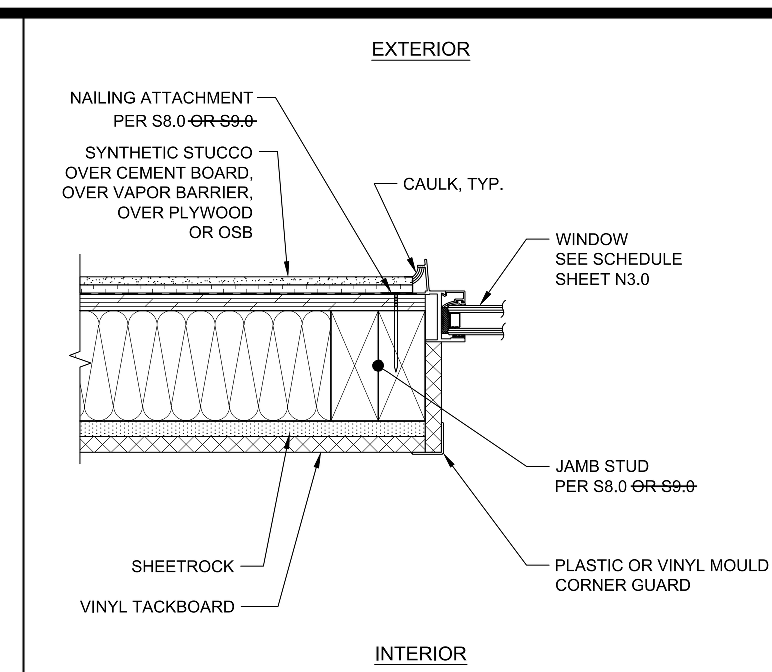

TYPICAL WINDOW JAMB SCALE: 3" = 1'-0" 3

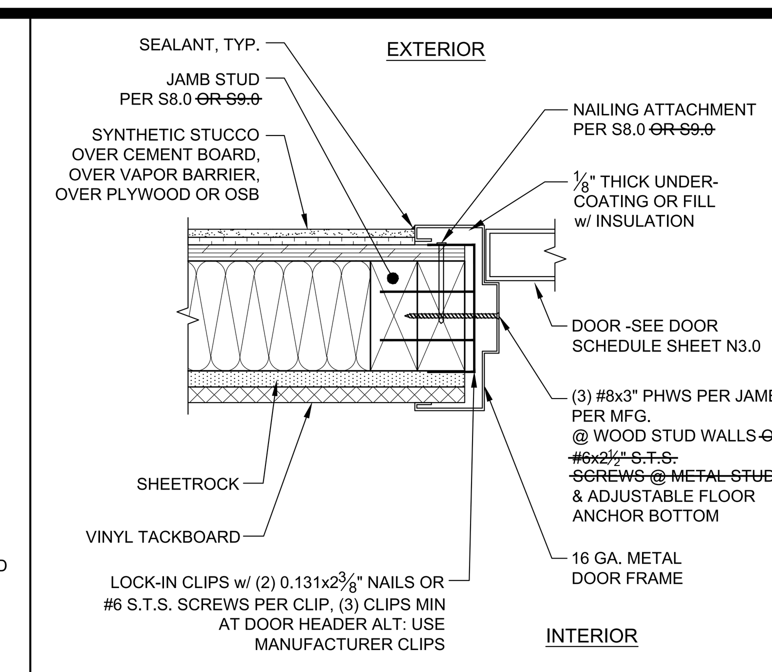

TYPICAL DOOR JAMB SCALE: 3" = 1'-0" 4

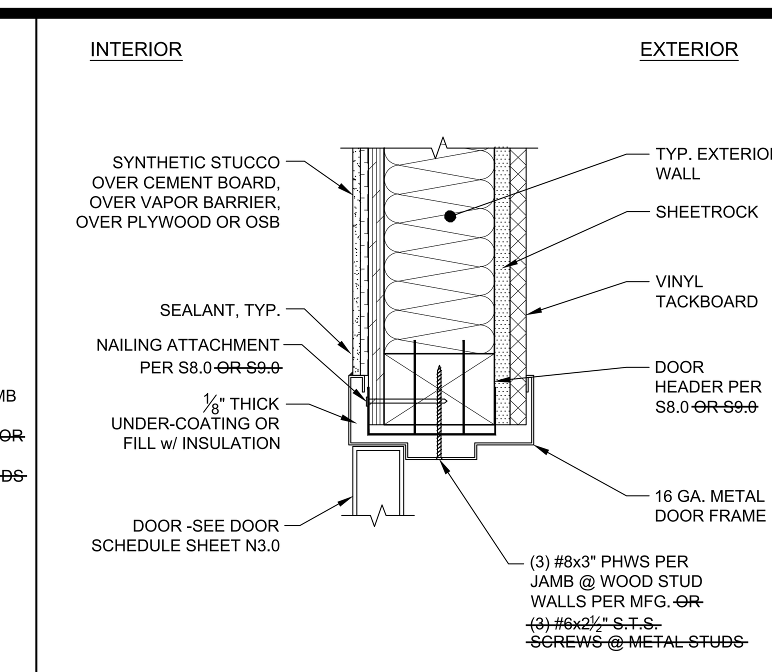

TYPICAL DOOR HEADER SCALE: 3" = 1'-0" 5

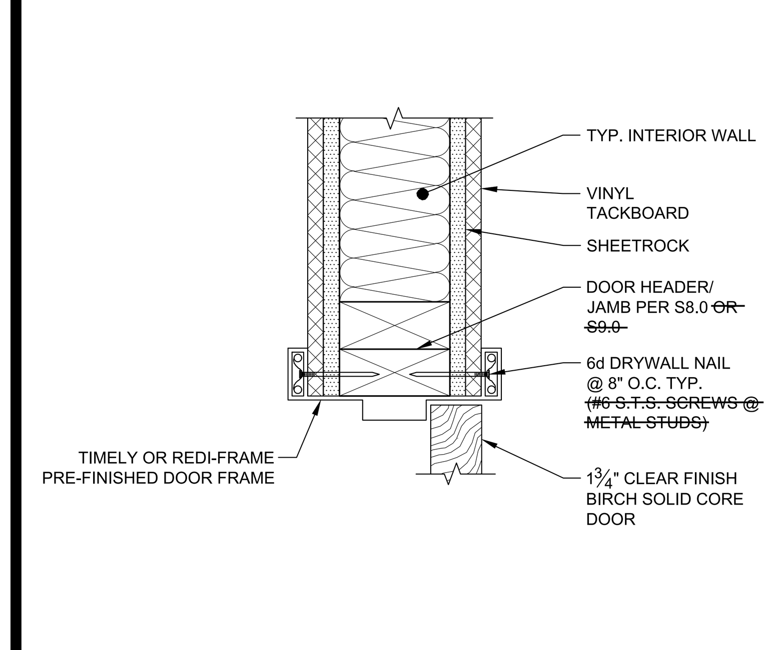

TYP. INTERIOR DOOR HEADER/JAMB SCALE: 3" = 1'-0" 6

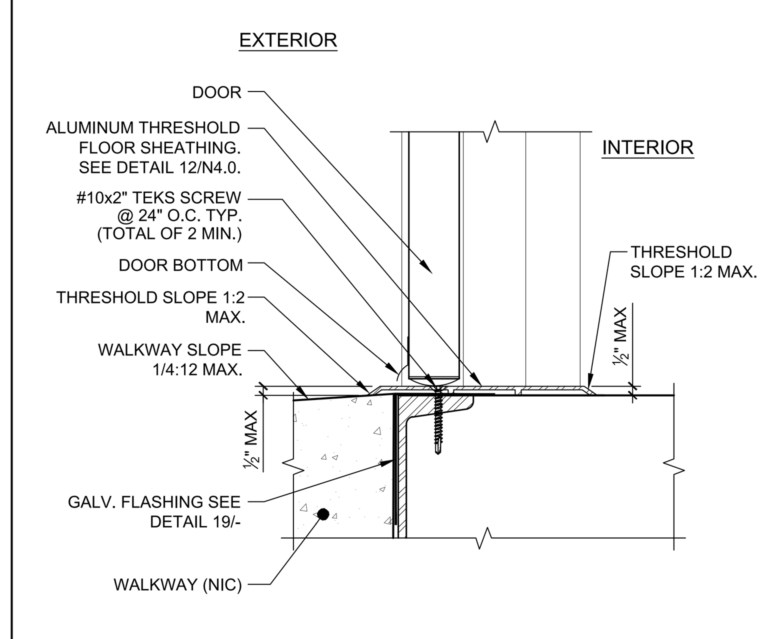

TYPICAL THRESHOLD DETAIL SCALE: 3" = 1'-0" 7

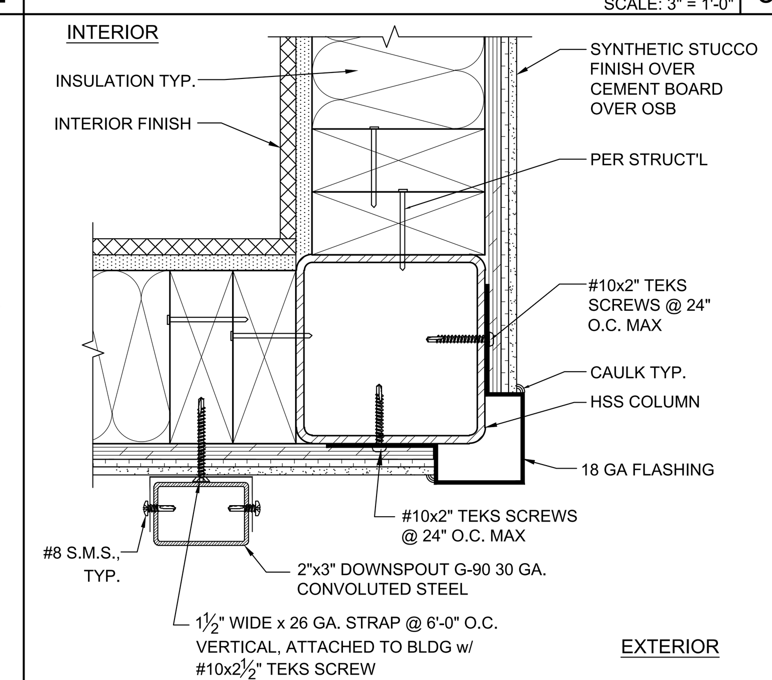

TYP. BLDG CORNER & DOWNSPOUT ATTACHMENT DETAIL SCALE: 3" = 1'-0" 8

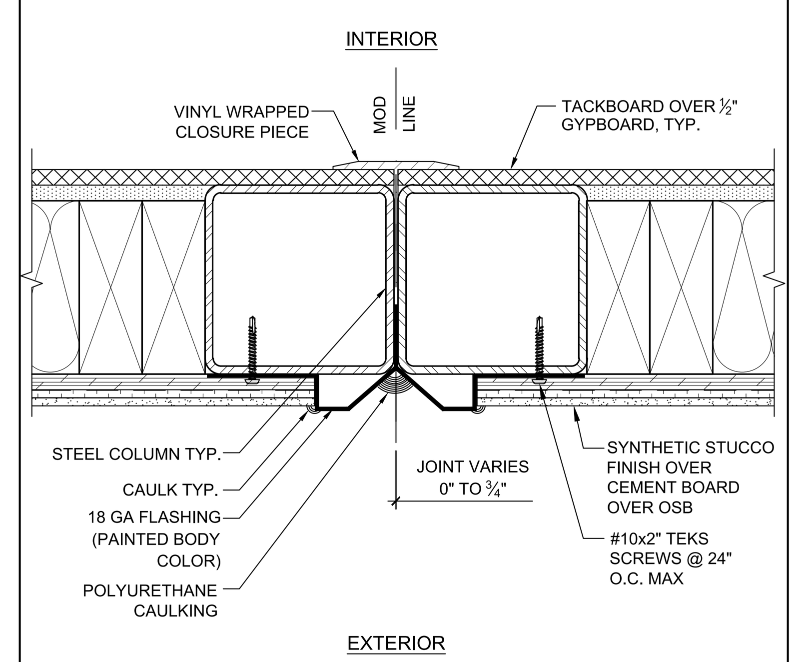

TYP. MODLINE CLOSURE DETAIL SCALE: 3" = 1'-0" 9

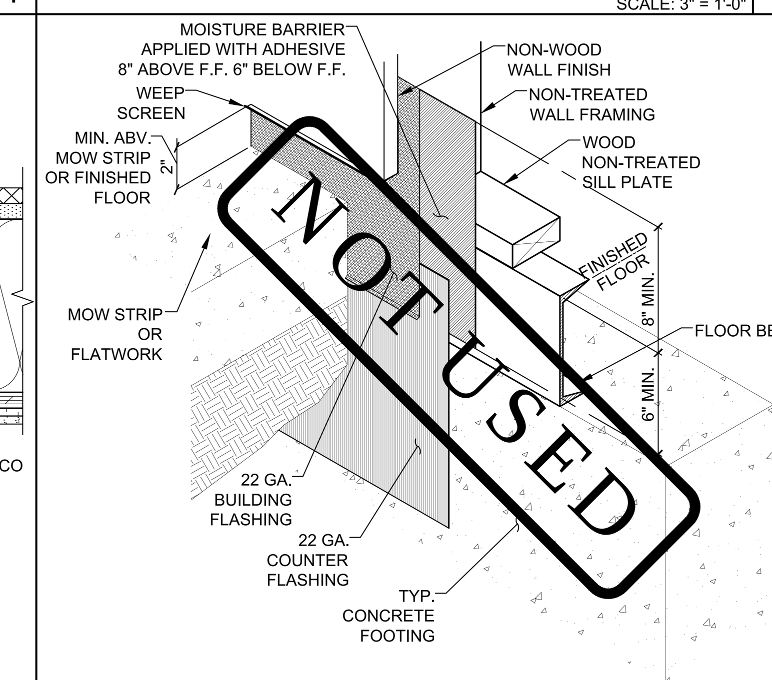

ISOMETRIC FLASHING DETAIL FOR BUILDINGS 2160 SQ. FT. OR LESS SCALE: 1 1/2" = 1'-0" 10

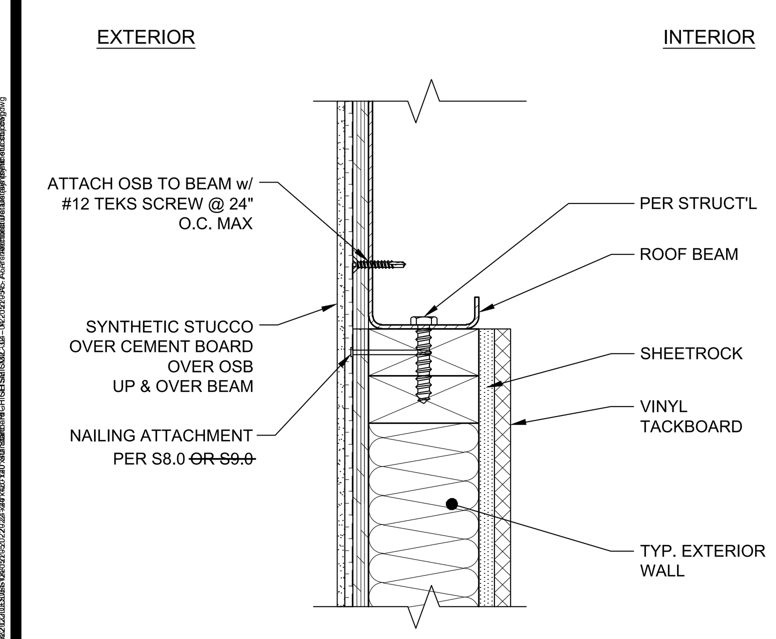

SIDING DETAIL @ ROOF BEAM SCALE: 3" = 1'-0" 11

NOT USED 12

NOT USED 13

1. FOR OPTIONAL METAL STUD FRAMING, SEE S9.0-S9.2.
2. ADDITIONAL R-5 RIGID INSULATION REQUIRED @ METAL STUD WALLS. REFER TO MINIMUM INSULATION SCHEDULES ON SHEET M1.7 & 18/-.
3. FOR FINISH OPTIONS, SEE SHEET A7.0.
4. OPTIONAL HYBRID STUCCO FINISH DOES NOT REQUIRE OSB; SEE DETAIL 17/-.
5. REFER TO SHEET A7.3 FOR ALL BUILDING INSULATION INSTALLATION NOT SHOWN OR NOTED ON DETAIL ON THIS SHEET.
6. FOR BUILDINGS 2160 SQ. FT. OR LESS & ALL BUILDINGS INSTALLED ON ABOVE GRADE FOUNDATIONS PER 1A/S1.4, FLASHING SHALL BE PROVIDED PER DETAILS 10 & 19/-.
7. FOR BUILDINGS LARGER THAN 2160 SQ. FT. INSTALLED ON BELOW GRADE FOUNDATIONS PER 1/S1.4, FLASHING & DETERIORATION PROTECTION SHALL BE PROVIDED PER SHEET S5.7A. WHERE DETERIORATION PROTECTION IS NOT REQUIRED BY THE SHEET NOTES OF SHEET A5.7A, FLASHING SHALL BE PROVIDED BY DETAIL 10 & 19/-.

SHEET NOTES

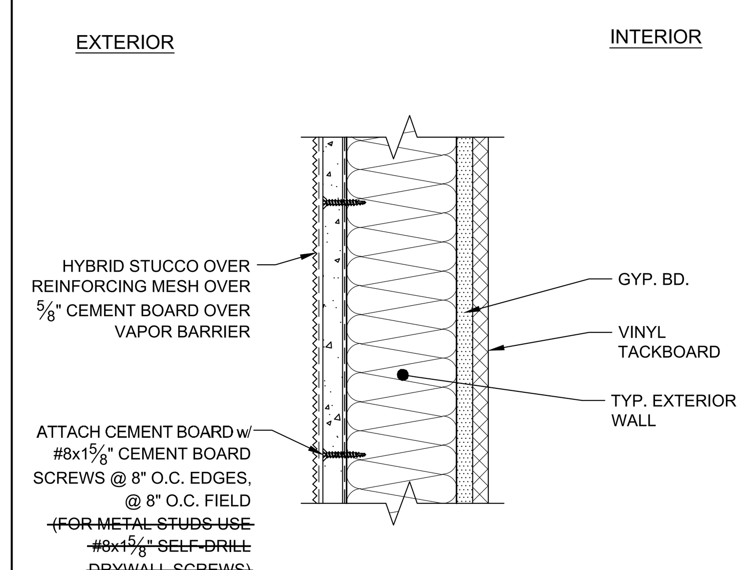

OPTIONAL HYBRID STUCCO FINISH SCALE: 3" = 1'-0" 17

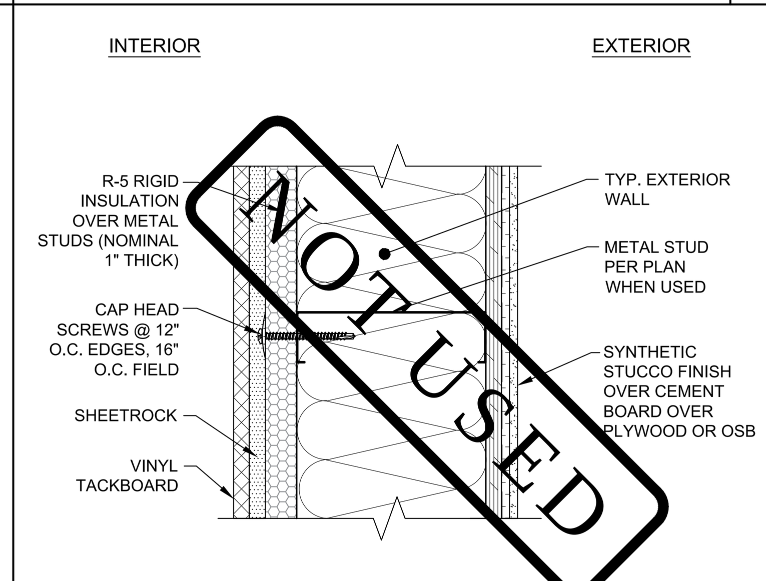

RIGID INSULATION @ METAL STUDS SCALE: 3" = 1'-0" 18

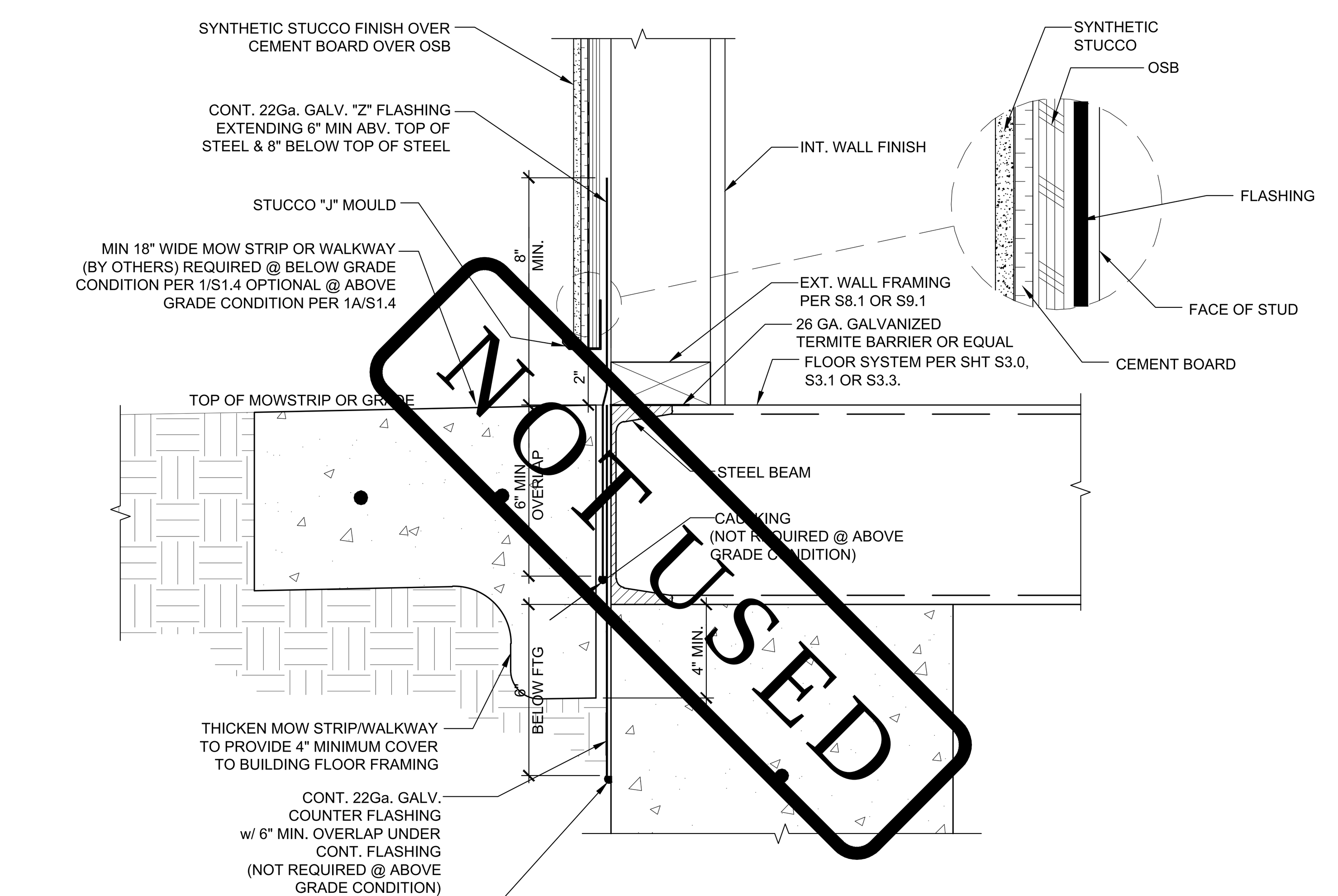

NOTES:
1. FOR FURTHER CLARIFICATION OF FLASHING, SEE ISOMETRIC VIEW - DETAIL 10/-.
2. FLASHING DETAILS 10 & 19/- ARE VALID FOR ALL BUILDINGS 2160 SQ. FT. OR LESS AND FOR ALL BUILDINGS FOR WHICH DETERIORATION PROTECTION IS NOT REQUIRED PER SHEET A5.7A.

FLASHING DETAIL FOR BUILDINGS 2160 SQ. FT. OR LESS SCALE: 3" = 1'-0" 19

IDENTIFICATION STAMP
DIV. OF THE STATE ARCHITECT
APP: 03-124589 INC:
REVIEWED FOR
SS ☑ FLS ☑ ACS ☑
DATE: 04/15/2025

American Modular Systems
787 Spreckels Ave., Manteca, CA 95336
Phone (209) 825-1921 Fax (209) 825-7018
www.americanmodular.com

INTELLECTUAL-PROPERTY & PROPRIETARY RIGHTS STATEMENT
COPYRIGHT © AMERICAN MODULAR SYSTEMS (AMS)
AMS OWNS ALL COPYRIGHT AND OTHER INTELLECTUAL-PROPERTY AND PROPRIETARY RIGHTS IN THESE DRAWINGS, SPECIFICATIONS, AND THE MATERIAL CONTAINED HEREIN. CERTAIN ELEMENTS SHOWN IN THESE DOCUMENTS ARE REGISTERED TRADEMARKS OF AMS. ALL PATENTABLE MATERIALS CONTAINED IN THESE DOCUMENTS AND ORIGINATING WITH AMS WILL REMAIN THE SOLE PROPERTY OF AMS. THESE DRAWING, SPECIFICATIONS, AND THE MATERIAL CONTAINED HEREIN MAY NOT BE REPRODUCED, TRANSMITTED, COPIED, DISTRIBUTED, MODIFIED, OR OTHERWISE DISPOSED OF (DIRECTLY OR INDIRECTLY) AND MAY NOT BE USED (IN WHOLE OR IN PART) TO ASSIST IN THE CONSTRUCTION, DESIGN, OR OTHER MAKING OF, OR FOR THE PURPOSE OF FURNISHING ANY INFORMATION FOR THE CONSTRUCTION, DESIGN, OR OTHER MAKING OF, ANY BUILDINGS (MODULAR OR OTHERWISE), DRAWINGS, SPECIFICATIONS, PRINTS, APPARATUS, OR PARTS THEREOF, EXCEPT AS EXPRESSLY PERMITTED BY WRITTEN CONSENT OF, OR IN A WRITTEN AGREEMENT WITH, AMS. SUBMITTAL OR DISTRIBUTION TO MEET OFFICIAL REGULATORY REQUIREMENTS WILL NOT BE CONSTRUED AS PUBLICATION IN DEROGATION OF AMS'S COPYRIGHT OR OTHER INTELLECTUAL-PROPERTY OR PROPRIETARY RIGHTS.

PRE-CHECKED SET NAME
24' x 40' THRU 120' x 40' STANDARD MODULAR BUILDING (HIGH SEISMIC)
FORM

SITE SPECIFIC PROJECT NAME
VENTURA COLLEGE
(1) 72'x40' BUILDING

APPROVED
DIV. OF THE STATE ARCHITECT
APP: 04-122051 PC
REVIEWED FOR
SS ☑ FLS ☑ ACS ☑ CG ☑
DATE: 04/03/2024

☒ 2022 CBC PRE-CHECK (PC) DOCUMENT
A SEPARATE PROJECT APPLICATION FOR CONSTRUCTION IS REQUIRED.

MANUFACTURER PROFESSIONAL OF RECORD ON PC
LICENSED ARCHITECT RANDAL PATRICK CAVANAGH No. C12631 Ren. 3-31-25 STATE OF CALIFORNIA

THESE DRAWINGS ARE PRELIMINARY AND NOT FOR CONSTRUCTION UNLESS STAMPED & SIGNED BY THE DESIGN PROFESSIONAL OF RECORD.

REVISIONS
1
2
3
4

DRAWN BY:	AA
SCALE:	AS NOTED
DATE:	MM/DD/YY
PROJECT NO:	XXXX-22

SHEET TITLE:
TYPICAL ARCHITECTURAL DETAILS - SYNTHETIC STUCCO OPTION

SHEET NUMBER:
A5.7

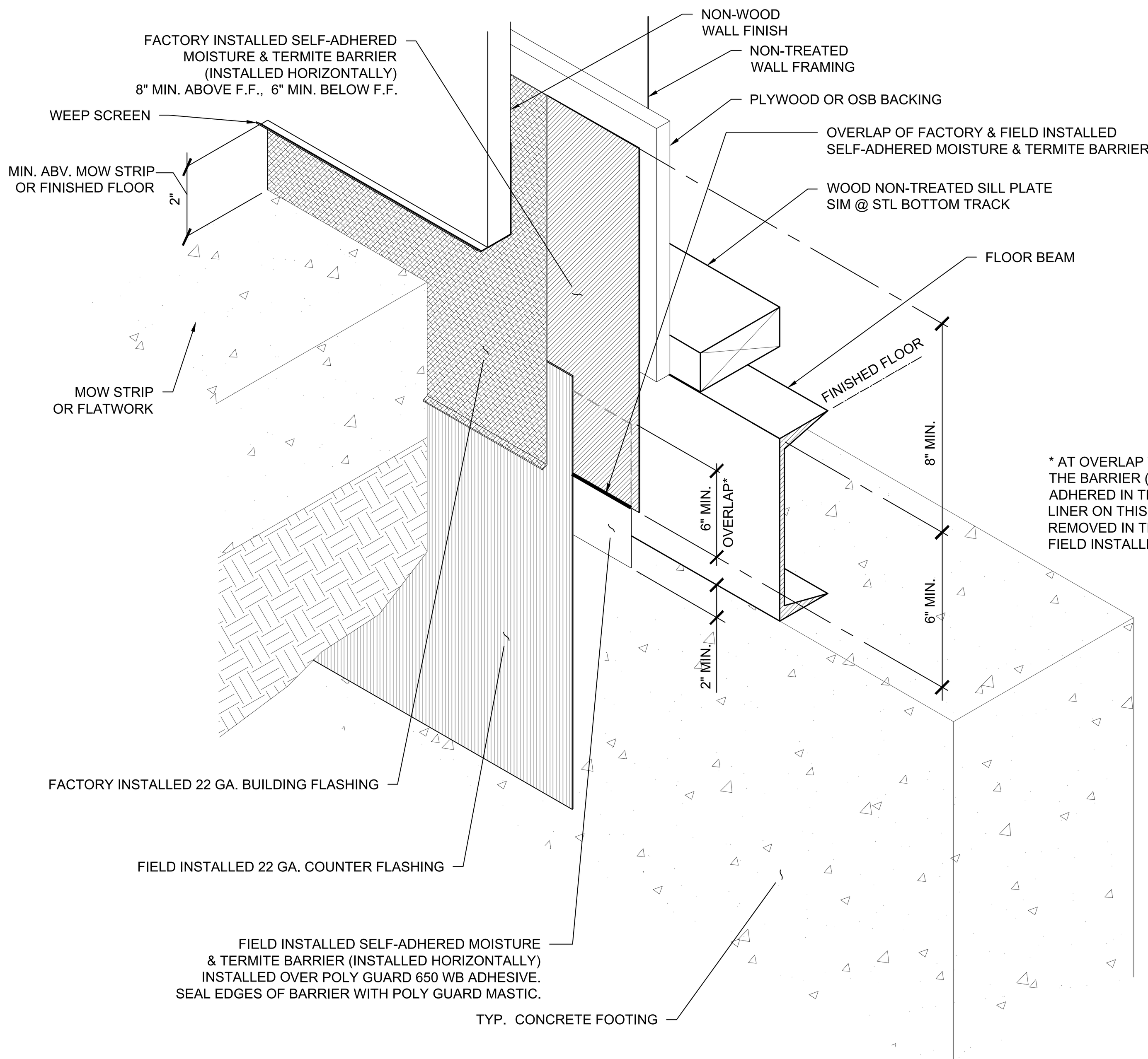

ISOMETRIC VIEW

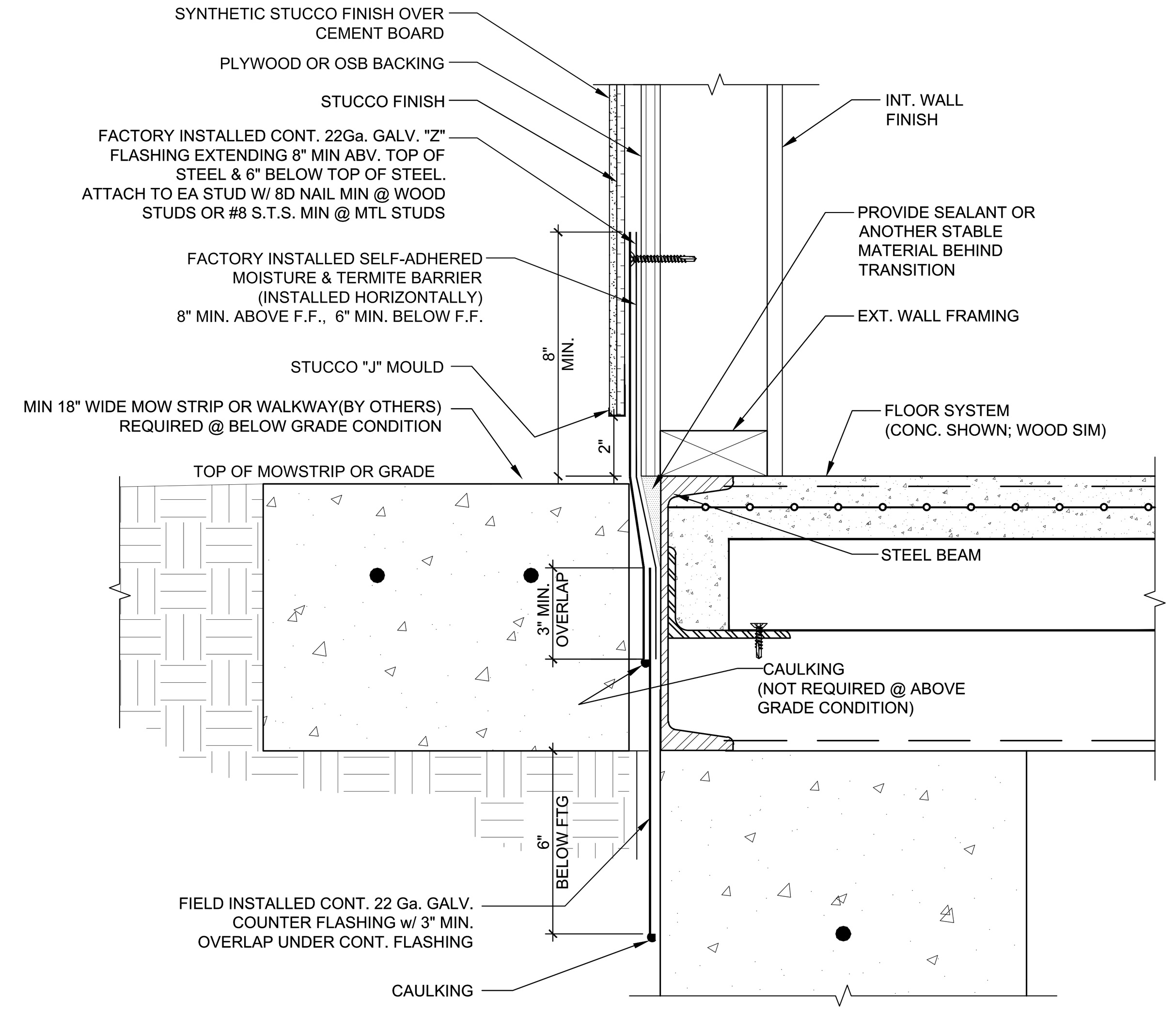

NOTE: WATER RESISTIVE BARRIER (BUILDING PAPER) AND POLYGUARD MEMBRANE (MOISTURE & TERMITE BARRIER) NOT SHOWN IN SECTION FOR CLARITY. REFER TO ISOMETRIC VIEW FOR POLYGUARD MEMBRANE.

SECTION VIEW

NOTE:
SEE NOTES IN DETAIL 2/- FOR DETERIORATION PROTECTION REQUIREMENTS.
SEE NOTES IN DETAIL 7/- FOR DETERIORATION PROTECTION MATERIALS.

DETERIORATION PROTECTION 1

MOISTURE AND TERMITE BARRIER MEMBRANE INSTALLATION REQUIREMENTS

- ALL SURFACES SHALL BE CLEAN (FREE OF DIRT, DUST, OIL AND OTHER DEBRIS) PRIOR TO APPLICATION OF THE ADHESIVE AND MEMBRANE.
- ALL SURFACE VOIDS GREATER THAN 1/8" IN WIDTH SHALL BE FILLED WITH SEALANT PRIOR TO INSTALLATION.
- APPLY LIQUID ADHESIVE TO ALL SURFACES WHICH WILL RECEIVE THE POLY-GUARD BARRIER.
- CUT PIECES OF MEMBRANE TO LENGTH AS NEEDED AND APPLY TO SUBSTRATE ONCE THE LIQUID ADHESIVE HAS BECOME TACKY. IMMEDIATELY PRIOR TO MEMBRANE APPLICATION, THE INSTALLER SHALL VERIFY THAT THE ADHESIVE IS STILL TACKY TO THE TOUCH, IF NECESSARY A SECOND LAYER OF ADHESIVE SHALL BE PROVIDED.
- INSTALL MEMBRANE IN A HORIZONTAL ORIENTATION.
- WHERE A HORIZONTAL LAP OCCURS IN THE SELF-ADHERED BARRIER, THE JOINTS SHALL BE LAPPED 2 1/2 INCHES MINIMUM.
- AT BUILDING CORNERS THE MEMBRANE SHALL BE WRAPPED AROUND THE CORNER AND SHALL EXTEND NO LESS THAN 6" BEYOND THE CORNER PRIOR TO LAPPING ANOTHER SHEET, SEE DETAIL 9/-.
- WHERE A MODULE JOINT (MODLINE) OCCURS THE FACTORY INSTALLED MEMBRANE SHALL BE TERMINATED AS SHOWN ON DETAIL 4\-. A FIELD INSTALLED MEMBRANE PIECE SHALL BE APPLIED FOLLOWING THE INSTALLATION OF THE MODULES ON THE FOUNDATION. THE FIELD INSTALLED MEMBRANE PIECE SHALL LAP THE FACTORY INSTALLED MEMBRANE 3" MINIMUM AT EACH END.
- WHERE A VERTICAL LAP OCCURS THE UPPER MEMBRANE LAYER SHALL BE LAPPED OVER THE LOWER MEMBRANE LAYER 6" MINIMUM.
- THE MEMBRANE SHALL BE ROLLED FIRMLY INTO PLACE USING HAND ROLLER.
- APPLY MASTIC OR SEALANT TO TERMINATING EDGES AND AROUND PIPES OR OTHER PENETRATIONS.
- WHERE THE SURFACES ARE OFFSET MORE THAN 1/8" OUT-OF-PLANE PROVIDE SEALANT OR ANOTHER STABLE MATERIAL TO TRANSITION BETWEEN THE SURFACES.
- WHERE A HORIZONTAL LAP OCCURS IN THE GALVANIZED FLASHING THE JOINTS SHALL BE LAPPED 2 1/2" MINIMUM
- REFER TO DETAIL 4/- FOR MODLINE DETERIORATION PROTECTION

REPAIR REQUIREMENTS
WHERE DAMAGE OCCURS, THE REPAIRS SHALL BE AS FOLLOWS:
1. WHERE THE DAMAGE MEASURES LESS THAN ½" IN ANY DIRECTION THE PUNCTURE SHALL BE SEALED WITH MASTIC.
2. WHERE THE DAMAGE MEASURES MORE THAN ½", BUT LESS THAN 2", IN ANY DIRECTION A PATCH SHALL BE INSTALLED OVER THE DAMAGE USING THE SAME MEMBRANE MATERIAL. THE PATCH SHALL OVERLAP 4" MINIMUM IN ALL DIRECTION.
3. WHERE THE DAMAGE MEASURES MORE THAN 2" IN ANY DIRECTION THE DAMAGED PORTION SHALL BE REMOVE AND A PIECE OF MEMBRANE SHALL BE INSTALLED. THE PATCH SHALL OVERLAP 4" MINIMUM IN ALL DIRECTIONS.

INSPECTION REQUIREMENTS
THE IN-PLANT INSPECTOR SHALL OBSERVE THE INSTALLATION OF FACTORY INSTALLED PORTION OF THE MEMBRANE FLASHING. THE ADHESIVE AND MEMBRANE SHALL BE INSTALLED IN ACCORDANCE WITH THESE INSTALLATION INSTRUCTIONS. ALL OVERLAPS SHALL BE AS INDICATED WITHIN THIS DRAWING PACKAGE. THE MEMBRANE SHALL BE CONTINUOUS UP THE WALL TO A MINIMUM HEIGHT ABOVE FINISH FLOOR AS INDICATED WITHIN THIS DRAWING PACKAGE.

THE ON-SITE INSPECTOR SHALL OBSERVE THE INSTALLATION OF THE SITE INSTALLED PORTION OF THE MEMBRANE FLASHING. THE FACTORY INSTALLED MEMBRANE SHOULD BE INVESTIGATED TO DETERMINE IF ANY DAMAGE OCCURRED DURING MODULE SHIPMENT/INSTALLATION PRIOR TO PROCEEDING WITH THE SITE INSTALLED MEMBRANE PLACEMENT. THE ADHESIVE AND MEMBRANE SHALL BE INSTALLED IN ACCORDANCE WITH THESE INSTALLATION INSTRUCTIONS. ALL OVERLAPS SHALL BE AS INDICATED WITHIN THIS DRAWING PACKAGE. THE MEMBRANE SHALL BE LAPPED ONTO THE FOUNDATION WALL AS INDICATED WITHIN THIS DRAWING PACKAGE. THE GALVANIZED FLASHING SHALL BE INSTALLED OVER THE MEMBRANE. THE GALVANIZED FLASHING SHALL BE CONTINUOUS UP THE WALL TO A MINIMUM HEIGHT ABOVE FINISH FLOOR AS INDICATED WITHIN THIS DRAWING PACKAGE AND SHALL CONTINUE BELOW THE BOTTOM OF THE FLATWORK OR MOW STRIP AS INDICATED WITHIN THIS DRAWING PACKAGE.

DETERIORATION PROTECTION REQUIREMENTS 2

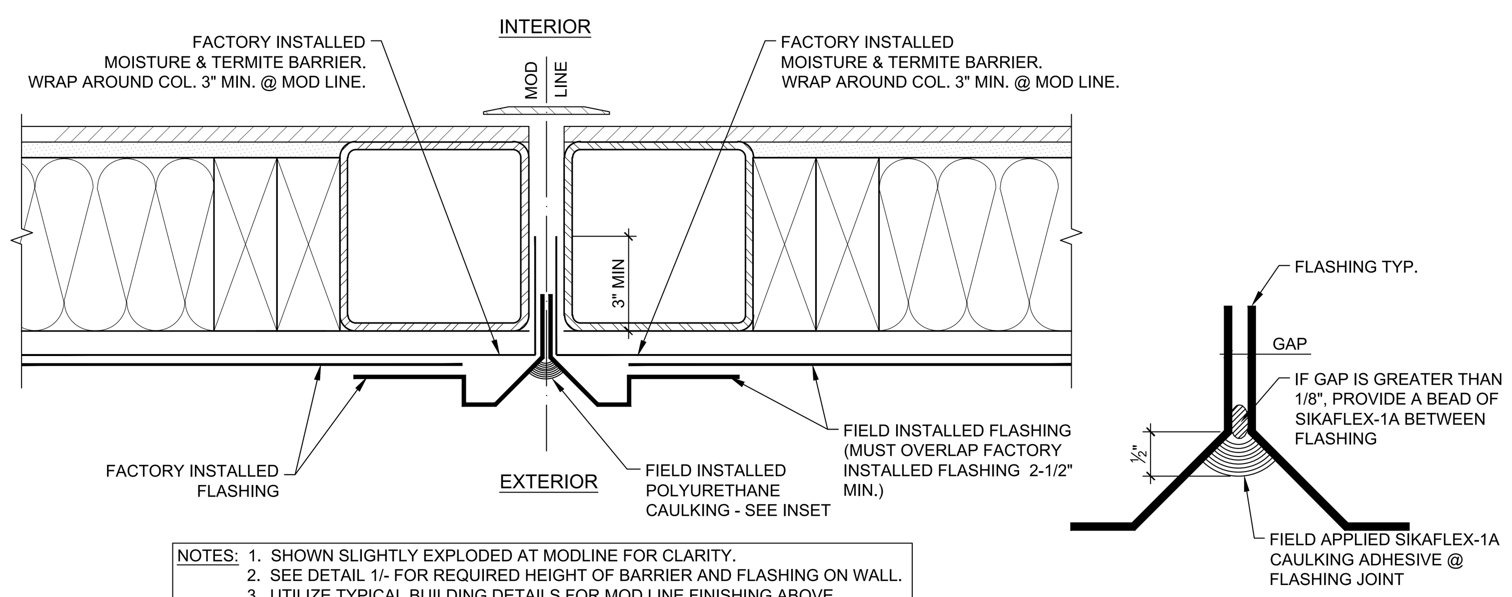

INSET DETAIL

NOTES:
1. SHOWN SLIGHTLY EXPLODED AT MODLINE FOR CLARITY.
2. SEE DETAIL 1/- FOR REQUIRED HEIGHT OF BARRIER AND FLASHING ON WALL.
3. UTILIZE TYPICAL BUILDING DETAILS FOR MOD LINE FINISHING ABOVE DETERIORATION PROTECTION.
4. WALL FINISH NOT SHOWN FOR CLARITY.

DETERIORATION PROTECTION DETAIL @ MOD LINE 4
SCALE: 3" = 1'-0"

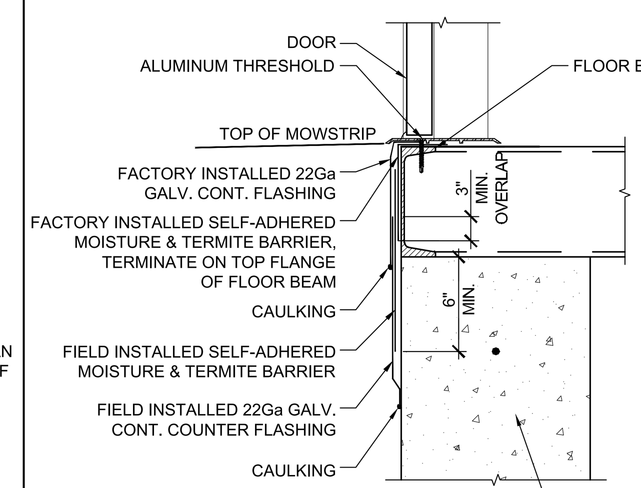

NOTE:
SEE DETAIL 1/- FOR ALL ITEMS NOT SHOWN OR NOTED.

DETERIORATION PROTECTION @ THRESHOLD 5
SCALE: 1-1/2" = 1'-0"

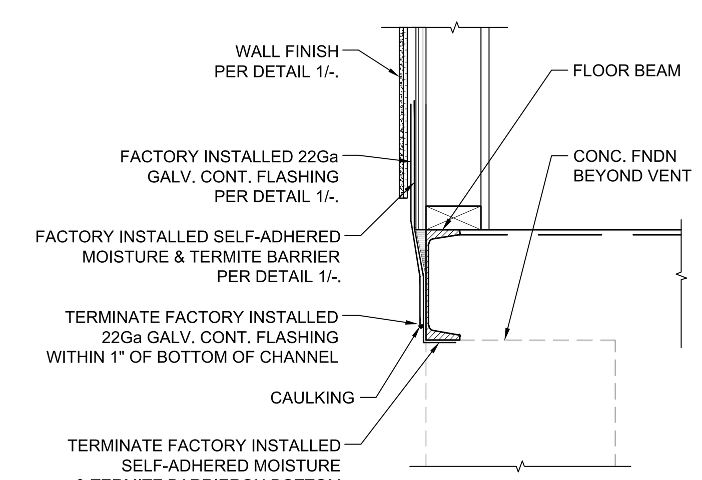

NOTE:
SEE DETAIL 1/- FOR ALL ITEMS NOT SHOWN OR NOTED.

DETERIORATION PROTECTION @ VENT ACCESS 6
SCALE: 1-1/2" = 1'-0"

MATERIALS USED FOR DETERIORATION PROTECTION SHAL BE AS FOLLOWS:

1. FACTORY INSTALLED SELF-ADHERED TERMITE BARRIER SHALL BE "POLYGUARD TERM" FLASHING MOISTURE/TERMITE BARRIER. WITH FOIL FACE UV BARRIER.
2. FIELD INSTALLED SELF-ADHERED TERMITE BARRIER SHALL BE "POLYGUARD TERM" WATER TERMITE/BARRIER FOR CONCRETE FOUNDATIONS.
3. LIQUID ADHESIVE SHALL BE "POLYGUARD" 650WB.
4. ALL FLASHING TO BE 22 GA FLASHING G60 COATING MIN., TYP.

DETERIORATION PROTECTION MATERIALS 7

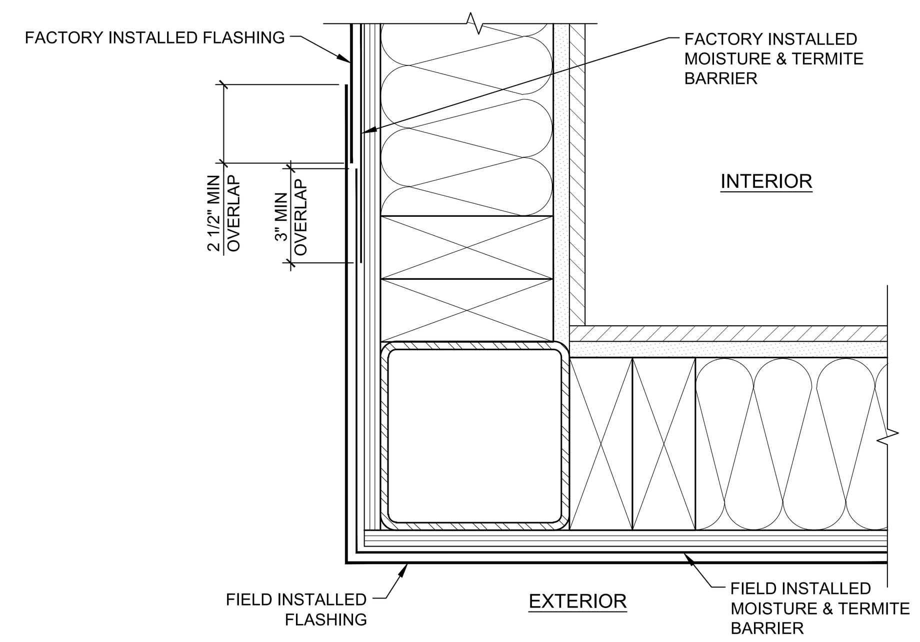

DETERIORATION PROTECTION DETAIL @ CORNER 9
SCALE: 3" = 1'-0"

NOT USED 10

NOT USED 11

1. DETERIORATION DETAILS SHOWN ON THIS SHEET ARE NOT REQUIRED FOR BUILDINGS 2160 SQ. FT. OR LESS.
2. DETERIORATION DETAILS SHOWN ON THIS SHEET ARE ONLY REQUIRED FOR BUILDINGS INSTALLED WITH BELOW GRADE FOUNDATIONS.
3. DETERIORATION DETAILS SHOWN ON THIS SHEET ARE NOT REQUIRED FOR BUILDINGS WITH CONCRETE FLOORS & MTL STUDS WHERE ALL WALL FINISHES AND BACKING ARE P.T. OR NON-WOOD MATERIAL.
4. THE DETERIORARTION DETAILS SHOWN ON THIS SHEET SHALL BE USED AT THE BUILDINGS PERIMETER & SHALL EXTEND VERTICALLY UP THE WALL TO THE MIN. HEIGHT REQUIRED PER DETAIL 1/-. THE TYPICAL BUILDING DETAILS FOR MOD LINE FINISHING MAY BE USED ABOVE THAT POINT.

SHEET NOTES 12

IDENTIFICATION STAMP
DIV. OF THE STATE ARCHITECT
APP: 03-124589 INC:
REVIEWED FOR
SS ☑ FLS ☑ ACS ☑
DATE: 04/15/2025

American Modular Systems
787 Spreckels Ave., Manteca, CA 95336
Phone (209) 825-1921 Fax (209) 825-7018
www.americanmodular.com

INTELLECTUAL-PROPERTY & PROPRIETARY RIGHTS STATEMENT
COPYRIGHT © AMERICAN MODULAR SYSTEMS (AMS)
AMS OWNS ALL COPYRIGHT AND OTHER INTELLECTUAL-PROPERTY AND PROPRIETARY RIGHTS IN THESE DRAWINGS, SPECIFICATIONS, AND THE MATERIAL CONTAINED HEREIN. CERTAIN ELEMENTS SHOWN IN THESE DOCUMENTS ARE REGISTERED TRADEMARKS OF AMS. ALL PATENTABLE MATERIALS CONTAINED IN THESE DOCUMENTS AND ORIGINATING WITH AMS WILL REMAIN THE SOLE PROPERTY OF AMS. THESE DRAWING, SPECIFICATIONS, AND THE MATERIAL CONTAINED HEREIN MAY NOT BE REPRODUCED, TRANSMITTED, COPIED, DISTRIBUTED, MODIFIED, OR OTHERWISE DISPOSED OF (DIRECTLY OR INDIRECTLY) AND MAY NOT BE USED (IN WHOLE OR IN PART) TO ASSIST IN THE CONSTRUCTION, DESIGN, OR OTHER MAKING OF, OR FOR THE PURPOSE OF FURNISHING ANY INFORMATION FOR THE CONSTRUCTION, DESIGN, OR OTHER MAKING OF, ANY BUILDINGS (MODULAR OR OTHERWISE), DRAWINGS, SPECIFICATIONS, PRINTS, APPARATUS, OR PARTS THEREOF, EXCEPT AS EXPRESSLY PERMITTED BY WRITTEN CONSENT OF, OR IN A WRITTEN AGREEMENT WITH, AMS. SUBMITTAL OR DISTRIBUTION TO MEET OFFICIAL REGULATORY REQUIREMENTS WILL NOT BE CONSTRUED AS PUBLICATION IN DEROGATION OF AMS'S COPYRIGHT OR OTHER INTELLECTUAL-PROPERTY OR PROPRIETARY RIGHTS.

PRE-CHECKED SET NAME
24' x 40' THRU 120' x 40'
STANDARD MODULAR BUILDING
(HIGH SEISMIC)
FORM®

SITE SPECIFIC PROJECT NAME
VENTURA COLLEGE
(1) 72'x40' BUILDING

APPROVED
DIV. OF THE STATE ARCHITECT
APP: 04-122051 PC
REVIEWED FOR
SS ☑ FLS ☑ ACS ☑ CG ☑
DATE: 04/03/2024

☒ 2022 CBC PRE-CHECK (PC) DOCUMENT
A SEPARATE PROJECT APPLICATION FOR CONSTRUCTION IS REQUIRED.

MANUFACTURER PROFESSIONAL OF RECORD ON PC

LICENSED ARCHITECT
RANDAL PATRICK CAVANAGH
No. C12631
Ren. 3-31-25
STATE OF CALIFORNIA

THESE DRAWINGS ARE PRELIMINARY AND NOT FOR CONSTRUCTION UNLESS STAMPED & SIGNED BY THE DESIGN PROFESSIONAL OF RECORD.

REVISIONS
1
2
3
4

DRAWN BY:	AA
SCALE:	AS NOTED
DATE:	MM/DD/YY
PROJECT NO:	XXXX-22

SHEET TITLE:
DETERIORATION DETAILS
GREATER THAN 2160 SQ FT.
- SYNTHETIC STUCCO OPTION

SHEET NUMBER:
A5.7A

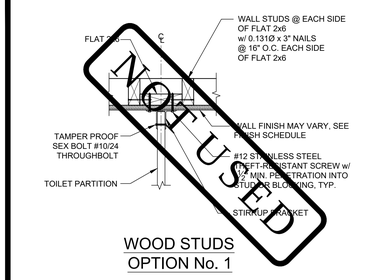

WOOD STUDS OPTION No. 1

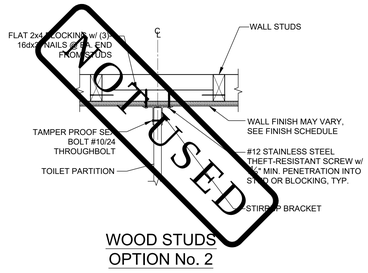

WOOD STUDS OPTION No. 2

TOILET PARTITION ANCHORAGE BLOCKING DETAILS @ WALL

SCALE: 1-1/2" = 1'-0" | 1

NOTCH & BORING SCHEDULE				
	NOMINAL STUD SIZE	ACTUAL STUD DEPTH	MAX NOTCH DEPTH	MAX BORED HOLE DIAMETER
EXTERIOR WALL	2x6	5½"	NOT PERMITTED	1"
	2x8	7¼"	1½"	1¾"
INTERIOR WALL	2x4	3½"	NOT PERMITTED	¾"
	2x6	5½"	¾"	1½"
	2x8	7¼"	1½"	2½"

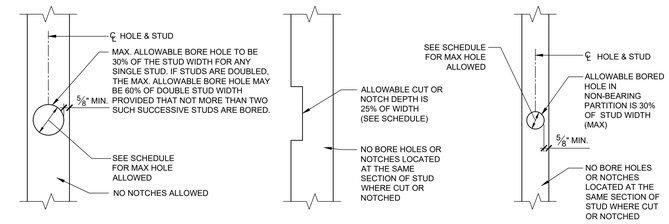

EXTERIOR WALL BORING | INTERIOR WALL NOTCHING | INTERIOR WALL BORING

STUD NOTCHING AND BORING DETAILS

NOT TO SCALE | 2

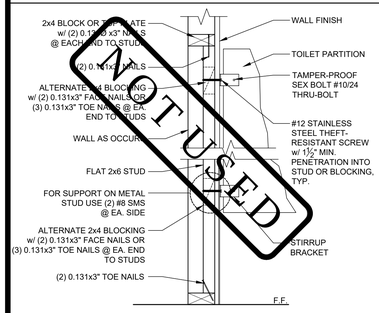

NOTE: FOR METAL STUD OPTION, SEE SHEET 20/S9.1 FOR BLOCKING.

TOILET PARTITION WALL BLOCKING

NOT TO SCALE | 3

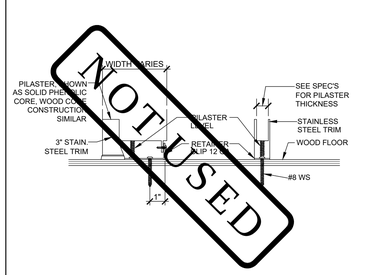

PARTITION TO WOOD FLOOR

NOT TO SCALE | 4

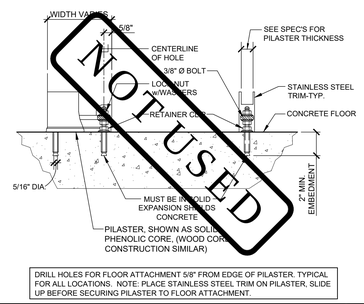

DRILL HOLES FOR FLOOR ATTACHMENT 5/8" FROM EDGE OF PILASTER. TYPICAL FOR ALL LOCATIONS. NOTE: PLACE STAINLESS STEEL TRIM ON PILASTER, SLIDE UP BEFORE SECURING PILASTER TO FLOOR ATTACHMENT.

PARTITION TO CONCRETE FLOOR

NOT TO SCALE | 5

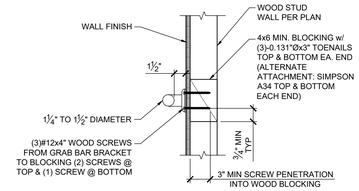

TYPICAL GRAB BAR BLOCKING DETAIL

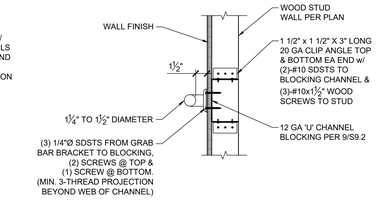

ALTERNATE GRAB BAR BLOCKING DETAIL

~~NOTE: FOR METAL STUD WALL OPTION, SEE DETAILS 9&10/S9.2.~~

GRAB BAR BLOCKING DETAIL

SCALE: 1-1/2" = 1'-0" | 6

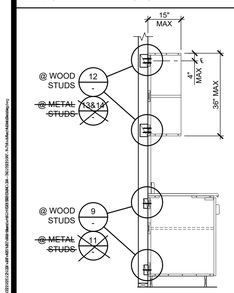

UPPER/BASE CABINET

NOTE:
1. FOR BRACING OF PARTITION WALLS WITH CABINETS OR BOOKSHELVES, REFER TO DETAILS 13&18/S8.1 @ WOOD STUD WALLS & DETAILS 9&10/S9.1 @ METAL STUD WALLS.
2. WHERE WORK SURFACES ARE PROVIDED FOR USE BY OTHER THAN EMPLOYEES, AT LEAST 5% SHALL BE ACCESSIBLE WITH FORWARD APPROACH. SEE 6/P2.0. (11B-226, 11B-902)
3. WHERE WORK SURFACES THAT ARE USED PRIMARILY BY CHILDREN 5 YEARS AND YOUNGER SHALL NOT BE REQUIRED TO COMPLY WITH SECTION 11B-902.4.

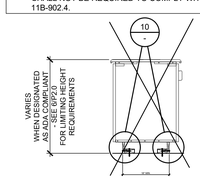

ISLAND CABINET

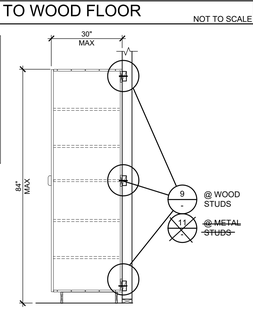

TALL CABINET

TYP. CABINET ATTACHMENT

NOT TO SCALE | 8

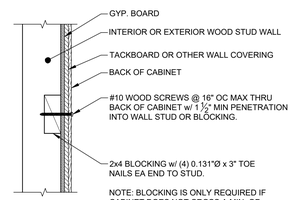

~~NOTE: SEE 11/- FOR METAL STUD WALLS.~~

FLOOR SUPPORTED CABINET ATTACHMENT @ WOOD STUD WALLS

SCALE: 1-1/2" = 1'-0" | 9

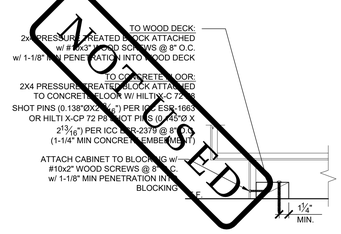

ISLAND CABINET ATTACHMENT @ FLOOR

SCALE: 1-1/2" = 1'-0" | 10

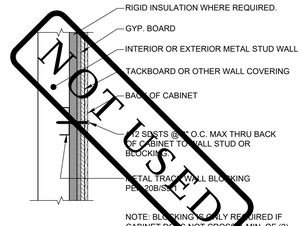

NOTE: SEE 9/- FOR WOOD STUD WALLS.

FLOOR SUPPORTED CABINET ATTACHMENT @ METAL STUD WALLS

SCALE: 1-1/2" = 1'-0" | 11

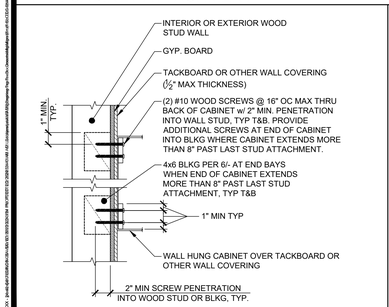

NOTE: SEE 13&14/- FOR METAL STUD WALLS.

WALL HUNG CABINET ATTACHMENT @ WOOD STUD WALLS (INTERIOR & EXTERIOR WALLS)

SCALE: 1-1/2" = 1'-0" | 12

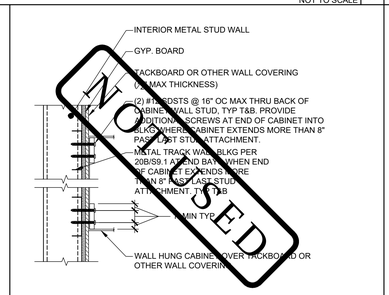

NOTE: SEE 14/- FOR EXTERIOR METAL STUD WALLS.
SEE 12/- FOR WOOD STUDS WALLS.

WALL HUNG CABINET ATTACHMENT @ INTERIOR METAL STUD WALLS

SCALE: 1-1/2" = 1'-0" | 13

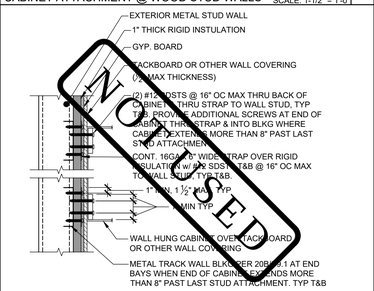

NOTE: SEE 13/- FOR INTERIOR METAL STUD WALLS.
SEE 12/- FOR WOOD STUDS WALLS.

WALL HUNG CABINET ATTACHMENT @ EXTERIOR METAL STUD WALLS

SCALE: 1-1/2" = 1'-0" | 14

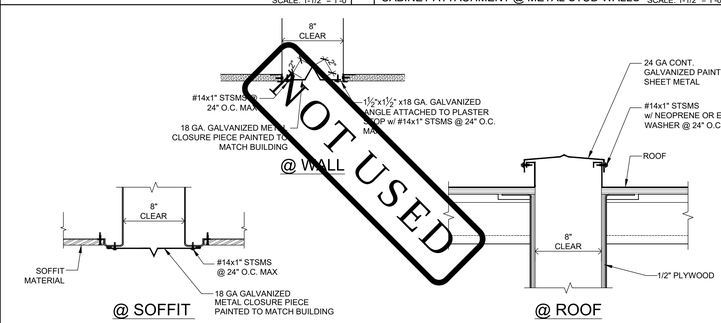

SEISMIC CLOSURE DETAILS

SCALE: 1-1/2" = 1'-0" | 15

IDENTIFICATION STAMP
DIV. OF THE STATE ARCHITECT
APP: 03-124589 INC:
REVIEWED FOR
SS ☑ FLS ☑ ACS ☑
DATE: 04/15/2025

AMS®
American Modular Systems
787 Spreckels Ave., Manteca, CA 95336
Phone (209) 825-1921 Fax (209) 825-7018
www.americanmodular.com

INTELLECTUAL-PROPERTY & PROPRIETARY RIGHTS STATEMENT
COPYRIGHT © AMERICAN MODULAR SYSTEMS (AMS)
AMS OWNS ALL COPYRIGHT AND OTHER INTELLECTUAL-PROPERTY AND PROPRIETARY RIGHTS IN THESE DRAWINGS, SPECIFICATIONS, AND THE MATERIAL CONTAINED HEREIN. CERTAIN ELEMENTS SHOWN IN THESE DOCUMENTS ARE REGISTERED TRADEMARKS OF AMS. ALL PATENTABLE MATERIALS CONTAINED IN THESE DOCUMENTS AND ORIGINATING WITH AMS WILL REMAIN THE SOLE PROPERTY OF AMS. THESE DRAWING, SPECIFICATIONS, AND THE MATERIAL CONTAINED HEREIN MAY NOT BE REPRODUCED, TRANSMITTED, COPIED, DISTRIBUTED, MODIFIED, OR OTHERWISE DISPOSED OF (DIRECTLY OR INDIRECTLY) AND MAY NOT BE USED (IN WHOLE OR IN PART) TO ASSIST IN THE CONSTRUCTION, DESIGN, OR OTHER MAKING OF, OR FOR THE PURPOSE OF FURNISHING ANY INFORMATION FOR THE CONSTRUCTION, DESIGN, OR OTHER MAKING OF, ANY BUILDINGS (MODULAR OR OTHERWISE), DRAWINGS, SPECIFICATIONS, PRINTS, APPARATUS, OR PARTS THEREOF, EXCEPT AS EXPRESSLY PERMITTED BY WRITTEN CONSENT OF, OR IN A WRITTEN AGREEMENT WITH, AMS. SUBMITTAL OR DISTRIBUTION TO MEET OFFICIAL REGULATORY REQUIREMENTS WILL NOT BE CONSTRUED AS PUBLICATION IN DEROGATION OF AMS'S COPYRIGHT OR OTHER INTELLECTUAL-PROPERTY OR PROPRIETARY RIGHTS.

PRE-CHECKED SET NAME

24' x 40' THRU 120' x 40' STANDARD MODULAR BUILDING (HIGH SEISMIC)

FORM®

SITE SPECIFIC PROJECT NAME

VENTURA COLLEGE
(1) 72'x40' BUILDING

APPROVED
DIV. OF THE STATE ARCHITECT
APP: 04-122051 PC
REVIEWED FOR
SS ☑ FLS ☑ ACS ☑ CG ☑
DATE: 04/03/2024

☒ 2022 CBC PRE-CHECK (PC) DOCUMENT
A SEPARATE DSA-SS/CC AND CLASS 2 CERTIFICATION IS REQUIRED.

MANUFACTURER PROFESSIONAL OF RECORD ON PC

LICENSED ARCHITECT PATRICK CLAY HOVEY No. C12631 Exp. 3-31-25 STATE OF CALIFORNIA

THESE DRAWINGS ARE PRELIMINARY AND NOT FOR CONSTRUCTION UNLESS STAMPED & SIGNED BY THE DESIGN PROFESSIONAL OF RECORD.

REVISIONS
1
2
3
4

DRAWN BY:	AA
SCALE:	AS NOTED
DATE:	MM/DD/YY
PROJECT NO:	XXXX-22

SHEET TITLE:

MISCELLANEOUS ARCHITECTURAL DETAILS

SHEET NUMBER:

A7.1

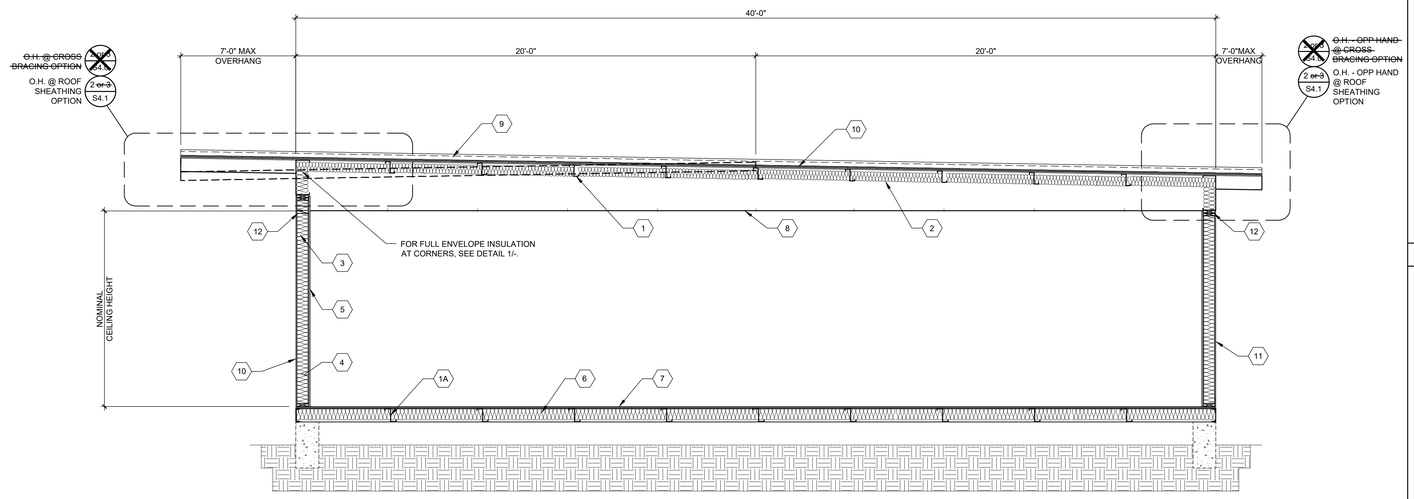

TYP. LONGITUDINAL SECTION - MONO/DUAL PITCH

SCALE: 3/8"=1'-0" | A

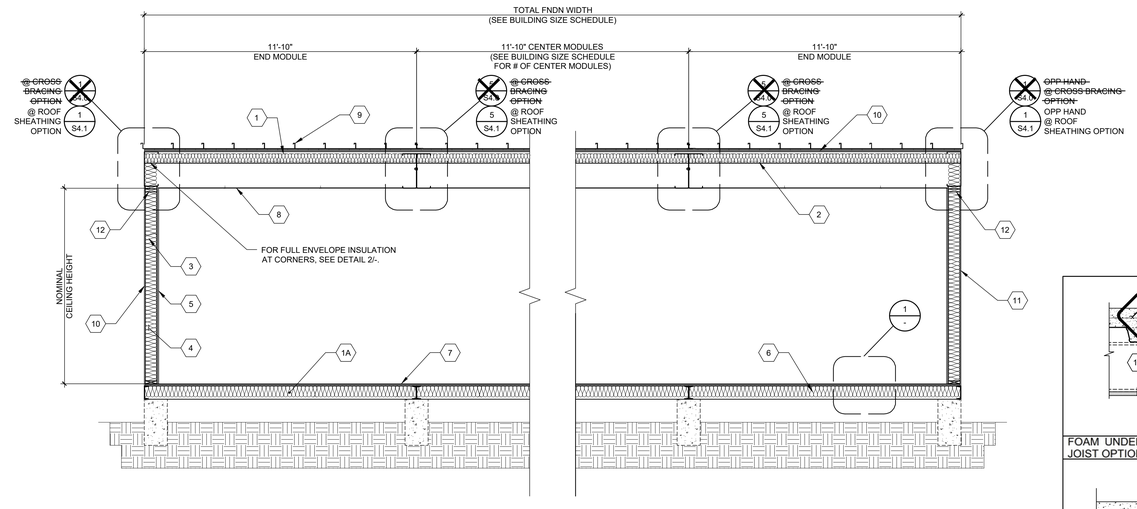

TYP. TRANSVERSE SECTION - MONO/DUAL PITCH

SCALE: 3/8"=1'-0" | B

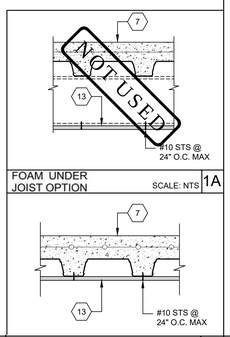

FOAM UNDER JOIST OPTION SCALE: NTS | 1A

FLOOR SECTION CONCRETE FLOOR SCALE: NTS | 1

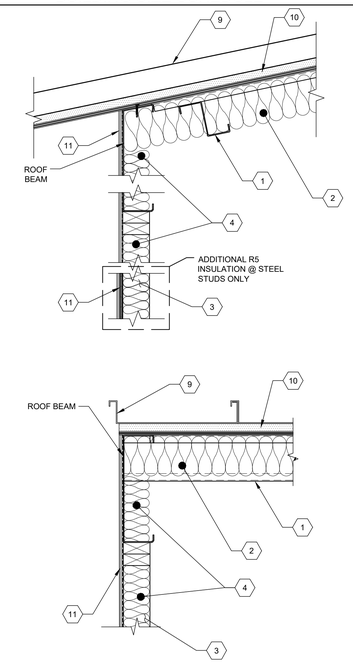

INSULATION CORNER DET.

SCALE: 1-1/2"=1'-0" | 2

1. ROOF PURLINS PER ROOF FRAMING PLAN
1A. FLOOR JOISTS PER FLOOR FRAMING PLAN
2. BATT ROOF INSULATION PER INSULATION SCHEDULE ON SHEET M1.7
3. WALL FRAMING PER SHEETS S8.0 ~~OR S9.0~~
4. BATT WALL INSULATION PER INSULATION SCHEDULE ON SHEET M1.7
5. VINYL FABRIC OVER TACKABLE BRACING PANELS
6. BATT FLOOR INSULATION PER INSULATION SCHEDULE ON SHEET M1.7
7. ~~PLYWOOD FLOOR PER SHEET S3.0 OR~~ CONCRETE FLOOR PER SHEETS ~~S3.1~~ S3.3
8. SUSPENDED T-BAR CEILING PER M1.0
9. FINISHED ROOFING PER ROOF PLAN & ROOF FRAMING PLAN
10. RIGID ROOF INSULATION PER INSULATION SCHEDULES ON SHEET M1.7 OVER ROOF SHEATHING (S4.1) ~~OR STEEL CROSS BRACING WITHOUT RIGID ROOF INSULATION (S4.0)~~
11. EXTERIOR WALL FINISH PER EXTERIOR ELEVATIONS ~~PROVIDE R-5 RIGID INSULATION AT METAL STUD WALLS~~
12. FIRE BLOCKING @ CEILING LEVEL PER CBC 718.2
13. RIGID INSULATION @ CONCRETE FLOORS - REFER TO INSULATION SCHEDULES IN SHEET M1.7

KEY NOTES

BUILDING SIZE SCHEDULE				
BUILDING SIZE (FT)	TOTAL # OF 12'-0" WIDE MODULES	TOTAL # OF CENTER MODULES	OVERALL BUILDING WIDTH[1]	
☐ 24'x40'	2	0	23'-8½"	
☐ 36'x40'	3	1	35'-6¾"	
☐ 48'x40'	4	2	47'-5"	
☐ 60'x40'	5	3	59'-3¼"	
☒ 72'x40'	6	4	71'-1½"	
☐ 84'x40'	7	5	82'-11¾"	
☐ 96'x40'	8	6	94'-10"	
☐ 108'x40'	9	7	106'-8¼"	
☐ 120'x40'	10	8	118'-6½"	

NOTES:

1. TOTAL BUILDING WIDTH INCLUDES 1/4" PER MODULE CONSTRUCTION TOLERANCE PER FOUNDATION SHEETS ~~S1.0,~~ S1.1, ~~S1.2 & S1.3~~

BUILDING SIZE SCHEDULE

IDENTIFICATION STAMP
DIV. OF THE STATE ARCHITECT
APP: 03-124589 INC:
REVIEWED FOR
SS ☑ FLS ☑ ACS ☑
DATE: 04/15/2025

AMS®
American Modular Systems
787 Spreckels Ave., Manteca, CA 95336
Phone (209) 825-1921 Fax (209) 825-7018
www.americanmodular.com

INTELLECTUAL-PROPERTY & PROPRIETARY RIGHTS STATEMENT
COPYRIGHT © AMERICAN MODULAR SYSTEMS (AMS)
AMS OWNS ALL COPYRIGHT AND OTHER INTELLECTUAL-PROPERTY AND PROPRIETARY RIGHTS IN THE DOCUMENTS AND DESIGNS OF WHICH THIS DOCUMENT OR DESIGN HEREIN CERTAIN ELEMENTS SHOWN IN THESE DOCUMENTS ARE REGISTERED TRADEMARKS OF AMS. ALL PATENTABLE MATERIALS CONTAINED IN THESE DOCUMENTS AND ORIGINATING WITH AMS WILL REMAIN THE SOLE PROPERTY OF AMS. THESE DRAWING, SPECIFICATIONS AND THE MATERIAL CONTAINED HEREIN MAY NOT BE REPRODUCED, TRANSMITTED, COPIED, DISTRIBUTED, MODIFIED, OR OTHERWISE DISPOSED OF (DIRECTLY OR INDIRECTLY) AND MAY NOT BE USED (IN WHOLE OR IN PART) TO ASSIST IN THE CONSTRUCTION, DESIGN, OR OTHER MAKING OF, OR FOR THE PURPOSE OF FURNISHING ANY INFORMATION FOR THE CONSTRUCTION, DESIGN, OR OTHER MAKING OF, ANY BUILDINGS (MODULAR OR OTHERWISE), DRAWINGS, SPECIFICATIONS, PRINTS, APPARATUS, OR PARTS THEREOF, EXCEPT AS EXPRESSLY PERMITTED BY WRITTEN CONSENT OF, OR IN A WRITTEN AGREEMENT WITH, AMS. SUBMITTAL OR DISTRIBUTION TO MEET OFFICIAL REGULATORY REQUIREMENTS WILL NOT BE CONSTRUED AS PUBLICATION IN DEROGATION OF AMS'S COPYRIGHT OR OTHER INTELLECTUAL-PROPERTY OR PROPRIETARY RIGHTS.

PRE-CHECKED SET NAME

24' x 40' THRU 120' x 40'
STANDARD MODULAR BUILDING
(HIGH SEISMIC)

FORM®

SITE SPECIFIC PROJECT NAME

VENTURA COLLEGE
(1) 72'x40' BUILDING

APPROVED
DIV. OF THE STATE ARCHITECT
APP: 04-122051 PC
REVIEWED FOR
SS ☑ FLS ☑ ACS ☑ CG ☑
DATE: 04/03/2024

☒ 2022 CBC PRE-CHECK (PC) DOCUMENT
A SEPARATE PRELIMINARY APPLICATION FOR CONSTRUCTION IS REQUIRED

MANUFACTURER PROFESSIONAL OF RECORD ON PC

LICENSED ARCHITECT PATRICK CHANG No. C12631 Rem. 3-31-25 STATE OF CALIFORNIA

THESE DRAWINGS ARE PRELIMINARY AND NOT FOR CONSTRUCTION UNLESS STAMPED & SIGNED BY THE DESIGN PROFESSIONAL OF RECORD.

REVISIONS
1
2
3
4

DRAWN BY:	AA
SCALE:	AS NOTED
DATE:	MM/DD/YY
PROJECT NO:	XXXX-22

SHEET TITLE:
TYPICAL LONGITUDINAL AND TRANSVERSE FRAME SECTIONS

SHEET NUMBER:
A7.3

1504.4.2 STRUCTURAL METAL PANEL ROOF SYSTEMS:
WHERE THE METAL ROOF PANEL FUNCTIONS AS THE ROOF DECK AND ROOF COVERING AND IT PROVIDES BOTH WEATHER PROTECTION AND SUPPORT FOR LOADS, THE STRUCTURAL METAL PANEL ROOF SYSTEM SHALL COMPLY WITH THIS SECTION. STRUCTURAL STANDING-SEAM METAL PANEL ROOF SYSTEMS SHALL BE TESTED IN ACCORDANCE WITH ASTM E1592 OR FM 4474. STRUCTURAL THROUGH FASTENED METAL PANEL ROOF SYSTEMS SHALL BE TESTED IN ACCORDANCE WITH ASTM E1592, FM 4474 OR UL 580.

EXCEPTIONS:
1. METAL ROOFS CONSTRUCTED OF COLD-FORMED STEEL SHALL BE PERMITTED TO BE DESIGNED AND TESTED IN ACCORDANCE WITH THE APPLICABLE REFERENCED STRUCTURAL DESIGN STANDARD IN SECTION 2210.1.

TESTING REPORT: TWINNING TEST REPORT #226045.R1 UL 1897

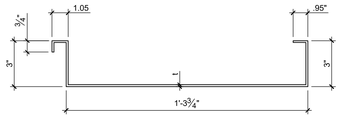

ASTM A1011 SS, GRADE 36
Fy = 36 ksi

w/ GALVANIZATION
t=0.0356 IN. MIN.

w/0 GALVANIZATION
t=0.0329 IN. MIN.
(0.035 IN. DESIGN)

EFFECTIVE SECTION PROPERTIES

$Sx^+(t) = 0.364\ IN^3$
$Sx^-(b) = 1.371\ IN^3$
$Ix^+ = 0.863\ IN^4$
$Sx^-(t) = 0.330\ IN^3$
$Sx^-(b) = 0.306\ IN^3$
$Ix^-= 0.476\ IN^4$
$Ae = 0.259\ IN^2$

GROSS SECTION PROPERTIES

$A = 0.844\ IN^2$
$Sx(t)= 0.418\ IN^3$
$Sx(b)= 1.412\ IN^3$
$Ix = 0.968\ IN^4$

20GA ROOF PAN MAY BE USED @ ROOFS WITH SHEATHING (S4.1) OR WITHOUT SHEATHING (S4.0)

20GA ROOF PAN PROPERTIES 2

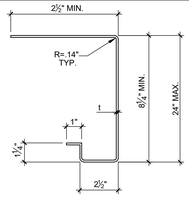

8 1/4" MIN. * x2½"x14ga
SOFFIT BEAM
ASTM A1011 SS, GRADE 45
Fy = 45 ksi
$A = 0.97\ IN^2$
$Sx^- = 1.78\ IN^3$
$Sx^+ = 1.31\ IN^3$
$Ix = 6.87\ IN^4$
t = 0.068 IN MIN.
(0.0713 IN DESIGN)

*- NOTE:
BEAM TO BE 8 1/4" MIN. DEEP TO MATCH OUTRIGGER BEAM. PROPERTIES & DESIGN BASED ON 7" MIN. MEMBER.

SOFFIT BEAM PROPERTIES 3

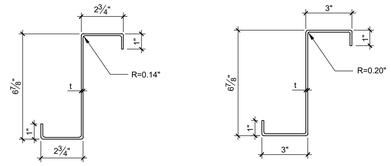

6⅞"x2¾"x14ga
14ga FLOOR JOIST
ASTM A1011 SS, GRADE 45
Fy = 45 ksi
$A = 0.98\ IN^2$
$Sx = 2.10\ IN^3$
$Ix = 7.22\ IN^4$
t = 0.068 IN MIN.
(0.0713 IN DESIGN)

6⅞"x3"x12ga
12ga FLOOR JOIST
ASTM A1011 SS, GRADE 45
Fy = 45 ksi
$A = 1.43\ IN^2$
$Sx = 3.06\ IN^3$
$Ix = 10.54\ IN^4$
t = 0.097 IN MIN.
(0.1017 IN DESIGN)

LIGHT GAUGE FLOOR JOIST PROPERTIES 5

1504.4.2 STRUCTURAL METAL PANEL ROOF SYSTEMS:
WHERE THE METAL ROOF PANEL FUNCTIONS AS THE ROOF DECK AND ROOF COVERING AND IT PROVIDES BOTH WEATHER PROTECTION AND SUPPORT FOR LOADS, THE STRUCTURAL METAL PANEL ROOF SYSTEM SHALL COMPLY WITH THIS SECTION. STRUCTURAL STANDING-SEAM METAL PANEL ROOF SYSTEMS SHALL BE TESTED IN ACCORDANCE WITH ASTM E1592 OR FM 4474. STRUCTURAL THROUGH FASTENED METAL PANEL ROOF SYSTEMS SHALL BE TESTED IN ACCORDANCE WITH ASTM E1592, FM 4474 OR UL 580.

EXCEPTIONS:
1. METAL ROOFS CONSTRUCTED OF COLD-FORMED STEEL SHALL BE PERMITTED TO BE DESIGNED AND TESTED IN ACCORDANCE WITH THE APPLICABLE REFERENCED STRUCTURAL DESIGN STANDARD IN SECTION 2210.1.

TESTING REPORT: TWINNING TEST REPORT #226045.R1 UL 1897

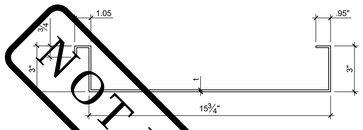

NOT USED

ASTM A1011 SS, GRADE 36 (Fy = 36 ksi)
OR ASTM A653 SS, GRADE 37 (Fy = 37 ksi)

w/ GALVANIZATION
t=0.0296 IN. MIN.

w/o GALVANIZATION
t=0.0269 IN. MIN.
(0.0283 IN. DESIGN)

EFFECTIVE SECTION PROPERTIES

$Sx^+(t) = 0.[illegible]\ IN^3$
$Sx^-(b) = 1.109\ IN^3$
$Ix^+ = 0.618\ IN^4$
$Sx^-(t) = 0.260\ IN^3$
$Sx^-(b) = 0.226\ IN^3$
$Ix^- = 0.363\ IN^4$
$Ae = 0.[illegible]80\ IN^2$

GROSS SECTION PROPERTIES

$A = 0.682\ IN^2$
$Sx(t)= 0.338\ IN^3$
$Sx(b)= 1.148\ IN^3$
$Ix = 0.784\ IN^4$

22GA ROOF PAN MAY BE ONLY USED @ ROOFS WITH SHEATHING (S4.1)

22GA ROOF PAN PROPERTIES 7

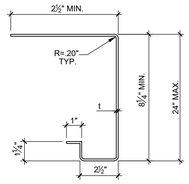

8 1/4" MIN.x2½"x12ga
SOFFIT OUTRIGGER BEAM
ASTM A1011 SS, GRADE 45
Fy = 45 ksi
$A = 1.4785\ IN^2$
$Sx^- = 3.0614\ IN^3$
$Sx^+ = 2.5100\ IN^3$
$Ix = 13.642\ IN^4$
t = 0.097 IN MIN.
(0.1017 IN DESIGN)

OUTRIGGER BEAM PROPERTIES 8

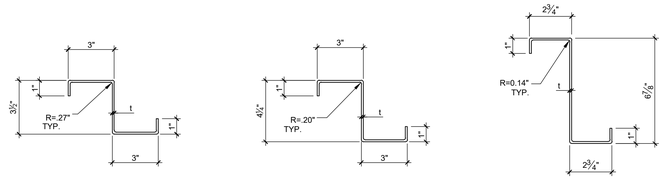

3½"x3"x10ga
ROOF PURLIN
ASTM A1011 SS, GRADE 50
Fy = 50 ksi
$A = 1.31\ IN^2$
$Sx = 1.51\ IN^3$
$Ix = 2.64\ IN^4$
t = 0.1278 IN MIN.
(0.1345 IN DESIGN)

4½"x3"x12ga
ROOF PURLIN
ASTM A1011 SS, GRADE 45
Fy = 45 ksi
$A = 1.16\ IN^2$
$Sx = 1.63\ IN^3$
$Ix = 3.46\ IN^4$
t = 0.097 IN MIN.
(0.1017 IN DESIGN)

6⅞"x2¾"x14ga
ROOF PURLIN
ASTM A1011 SS, GRADE 45
Fy = 45 ksi
$A = 0.98\ IN^2$
$Sx = 2.10\ IN^3$
$Ix = 7.22\ IN^4$
t = 0.068 IN MIN.
(0.0713 IN DESIGN)

LIGHT GAUGE ROOF PURLIN PROPERTIES (FOR USE W/ ROOF FRAMING PLANS S4.0 & S4.1) 10

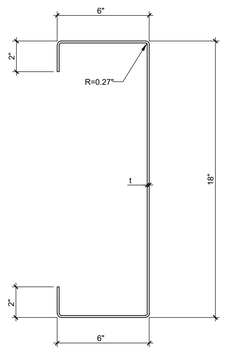

10 GA. LONGITUDINAL BEAM

ASTM = A1011 SS
GRADE = 50
Fy = 50ksi
t = 0.1278 IN. MIN.
(0.1345 IN. DESIGN)

BEAM DEPTH	18"
A (IN^2)	4.42
S_X MIN. (IN^3)	24.077
I_X MIN. (IN^4)	216.70

ROOF BEAM PROPERTIES 18

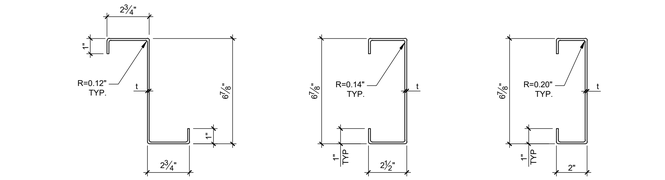

6⅞"x2¾"x16ga 'Z'
TYPICAL ROOF PURLIN
ASTM A1011 SS, GRADE 50
Fy = 50 ksi
$A = 0.79\ IN^2$
$Sx = 1.69\ IN^3$
$Ix = 5.82\ IN^4$
t = 0.0538 IN MIN.
(0.0566 IN DESIGN)

6⅞"x2½"x14ga 'C'
ALTERNATE ROOF PURLIN
ASTM A1011 SS, GRADE 45
Fy = 45 ksi
$A = 0.95\ IN^2$
$Sx = 1.98\ IN^3$
$Ix = 6.81\ IN^4$
t = 0.0677 IN MIN.
(0.0713 IN DESIGN)

6⅞"x2"x12ga 'C'
ALTERNATE ROOF PURLIN
ASTM A1011 SS, GRADE 45
Fy = 45 ksi
$A = 1.22\ IN^2$
$Sx = 2.39\ IN^3$
$Ix = 8.20\ IN^4$
t = 0.0966 IN MIN.
(0.1017 IN DESIGN)

LIGHT GAUGE ROOF PURLIN PROPERTIES (FOR USE W/ ROOF FRAMING PLAN S4.1 ONLY) 15

NOT USED 19

1. THE MATERIAL THICKNESS OF LIGHT GAUGE STRUCTURAL MEMBERS, IN THEIR END-USE, SHALL MEET OR EXCEED THE MINIMUM BASE METAL THICKNESS SPECIFIED ON SHEET S0.0 THE MATERIAL GAGE DESIGNATION IN THE PLAN SHALL BE USED AS REFERENCE ONLY.
2. UNLESS NOTED OTHERWISE, ALL SECTION PROPERTIES ARE GROSS SECTION PROPERTIES.
3. LIGHT GAUGE STRUCTURAL MEMBERS TO BE FABRICATED FROM HOT ROLLED SHEETS WITH RUST INHIBITIVE COATING. SEE SHEET N2.0, "LIGHT GAUGE METAL STUDS & COLD FORMED STEEL", FOR ADDITIONAL INFORMATION.

SHEET NOTES

IDENTIFICATION STAMP
DIV. OF THE STATE ARCHITECT
APP: 03-124589 INC:
REVIEWED FOR
SS ☑ FLS ☑ ACS ☑
DATE: 04/15/2025

AMS®
American Modular Systems
787 Spreckels Ave., Manteca, CA 95336
Phone (209) 825-1921 Fax (209) 825-7018
www.americanmodular.com

INTELLECTUAL-PROPERTY & PROPRIETARY RIGHTS STATEMENT
COPYRIGHT © AMERICAN MODULAR SYSTEMS (AMS)
AMS OWNS ALL COPYRIGHT AND OTHER INTELLECTUAL-PROPERTY AND PROPRIETARY RIGHTS IN THESE DRAWINGS, SPECIFICATIONS, AND THE MATERIAL CONTAINED HEREIN. CERTAIN ELEMENTS SHOWN IN THESE DOCUMENTS ARE REGISTERED TRADEMARKS OF AMS. ALL PATENTABLE MATERIALS CONTAINED IN THESE DOCUMENTS AND ORIGINATING WITH AMS WILL REMAIN THE SOLE PROPERTY OF AMS. THESE DRAWINGS, SPECIFICATIONS, AND THE MATERIAL CONTAINED HEREIN MAY NOT BE REPRODUCED, TRANSMITTED, COPIED, DISTRIBUTED, MODIFIED, OR OTHERWISE DISPOSED OF (DIRECTLY OR INDIRECTLY) AND MAY NOT BE USED (IN WHOLE OR IN PART) TO ASSIST IN THE CONSTRUCTION, DESIGN, OR OTHER MAKING OF, OR FOR THE PURPOSE OF FURNISHING ANY INFORMATION FOR THE CONSTRUCTION, DESIGN, OR OTHER MAKING OF, ANY BUILDINGS (MODULAR OR OTHERWISE), DRAWINGS, SPECIFICATIONS, PRINTS, APPARATUS, OR PARTS THEREOF, EXCEPT AS EXPRESSLY PERMITTED BY WRITTEN CONSENT OF, OR IN A WRITTEN AGREEMENT WITH, AMS. SUBMITTAL OR DISTRIBUTION TO MEET OFFICIAL REGULATORY REQUIREMENTS WILL NOT BE CONSTRUED AS PUBLICATION IN DEROGATION OF AMS'S COPYRIGHT OR OTHER INTELLECTUAL-PROPERTY OR PROPRIETARY RIGHTS.

PRE-CHECKED SET NAME
24' x 40' THRU 120' x 40'
STANDARD MODULAR BUILDING
(HIGH SEISMIC)
FORM®

SITE SPECIFIC PROJECT NAME
VENTURA COLLEGE
(1) 72'x40' BUILDING

APPROVED
DIV. OF THE STATE ARCHITECT
APP: 04-122051 PC
REVIEWED FOR
SS ☑ FLS ☑ ACS ☑ CG ☑
DATE: 04/03/2024

☒ 2022 CBC PRE-CHECK (PC) DOCUMENT
A SEPARATE PRE-SITE AND CATEGORY CONSTRUCTION PLAN IS REQUIRED.

MANUFACTURER PROFESSIONAL OF RECORD ON PC

LICENSED ARCHITECT PATRICK CAMPBELL MAGNUSSON No. C12631 Ren. 3-31-25 STATE OF CALIFORNIA

REGISTERED PROFESSIONAL ENGINEER MARK D. FRANCK No. S3380 STRUCTURAL STATE OF CALIFORNIA RST#22214

03/13/2024

THESE DRAWINGS ARE PRELIMINARY AND NOT FOR CONSTRUCTION UNLESS STAMPED & SIGNED BY THE DESIGN PROFESSIONAL OF RECORD.

REVISIONS
1
2
3
4

DRAWN BY:	AA
SCALE:	AS NOTED
DATE:	MM/DD/YY
PROJECT NO:	XXXX-22

SHEET TITLE:
STEEL MEMBER PROPERTIES

SHEET NUMBER:
S0.0

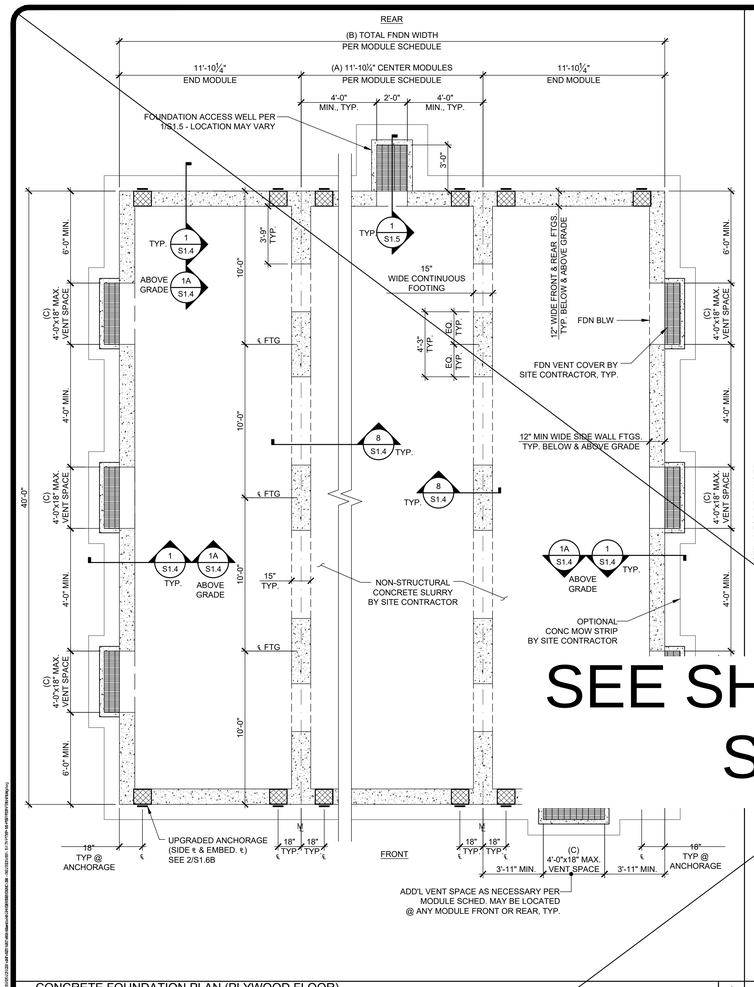

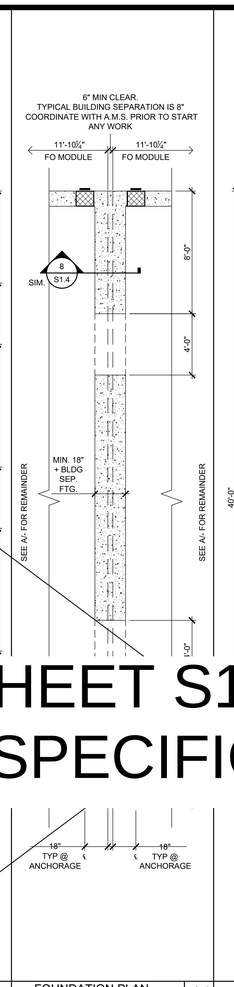

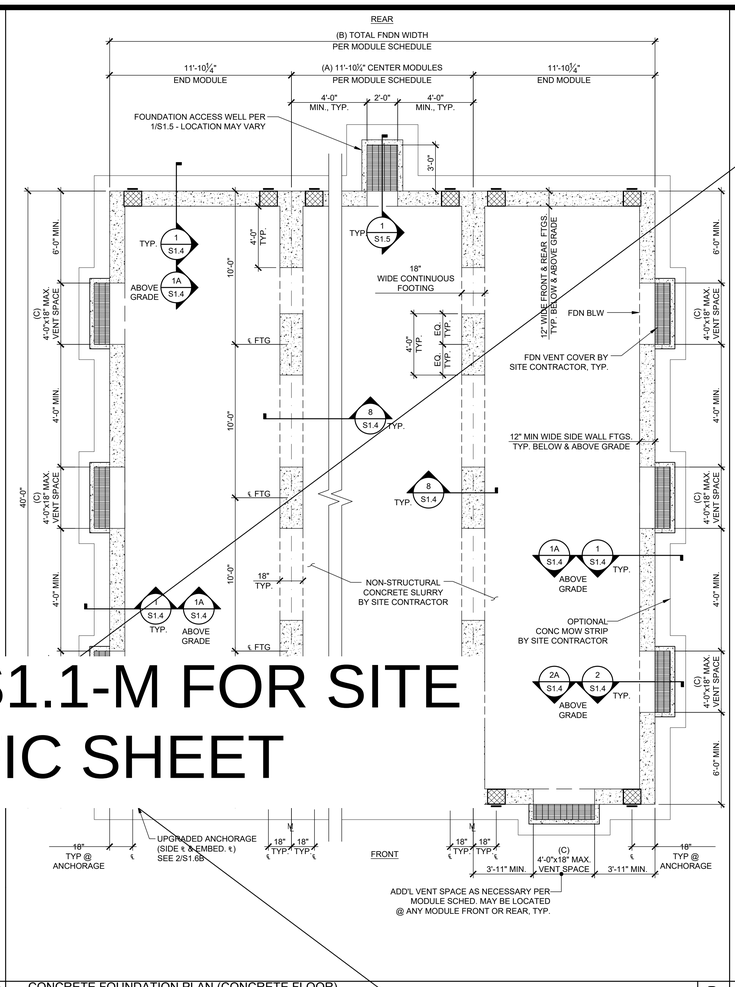

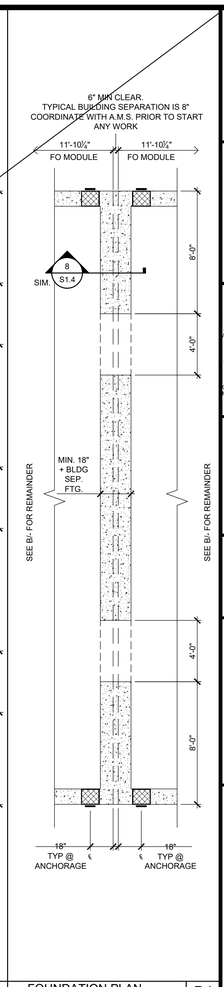

SEE SHEET S1.1-M FOR SITE SPECIFIC SHEET

☐ CONCRETE FOUNDATION PLAN (PLYWOOD FLOOR)
50 PSF LIVE LOAD + 15 PSF PARTITION LOAD
SCALE: 1/4"=1'-0" | A

☐ FOUNDATION PLAN
COMBINED SCALE: 1/4"=1'-0" | A1

☐ CONCRETE FOUNDATION PLAN (CONCRETE FLOOR)
50 PSF LIVE LOAD + 15 PSF PARTITION LOAD
SCALE: 1/4"=1'-0" | B

☐ FOUNDATION PLAN
COMBINED SCALE: 1/4"=1'-0" | B1

NOTES

1. CONCRETE MIXTURES:
   A. ULTIMATE 28-DAY CONCRETE COMPRESSIVE STRENGTH (f'c) SHALL BE PER SHEET N1.0A
   B. PROPORTIONING OF CONCRETE MIXTURES SHALL BE IN ACCORDANCE WITH ACI 318-19, SECTION 26.4.3.
   C. DOCUMENTATION OF CONCRETE MIXTURE CHARACTERISTICS SHALL BE IN ACCORDANCE WITH ACI 318-19, SECTION 26.4.4.
   D. CEMENT SHALL BE CERTIFIED PER TITLE 24, PART 2, SECTION 1910A.1.
   E. SEE SHEET N1.0 FOR ADDITIONAL CONCRETE NOTES.
2. BUILDINGS MAY BE SET ON CONCRETE FOUNDATIONS THAT HAVE REACHED A MINIMUM CONCRETE COMPRESSIVE STRENGTH OF 2,500 PSI. PRIOR TO THE SETTING OF THE MODULAR BUILDING ON CONCRETE FOUNDATIONS THAT HAVE NOT YET CURED 28 DAYS POST PLACEMENT OF FOUNDATION CONCRETE, THE FOUNDATION CONTRACTOR SHALL
   A. HAVE THE PROJECT TESTING LAB PERFORM CONCRETE CYLINDER COMPRESSION TESTS OF THE FOUNDATION CONCRETE USED AT THE SITE,
   B. FURNISH THE PROJECT IOR AND THE REGISTERED DESIGN PROFESSIONAL IN RESPONSIBLE CHARGE WITH THE CONCRETE TEST REPORTS VERIFYING THAT THE FOUNDATION CONCRETE HAS REACHED THE MINIMUM STRENGTH AS SPECIFIED ABOVE, AND
   C. NOTIFY THE PROJECT IOR AND THE REGISTERED DESIGN PROFESSIONAL IN RESPONSIBLE CHARGE OF THEIR INTENT TO SET THE MODULAR BUILDING PRIOR TO 28 DAYS POST PLACEMENT OF FOUNDATION CONCRETE.
3. REINFORCING STEEL SHALL BE 60,000 PSI MINIMUM, PER ASTM A615. THE REINFORCING BARS SHALL BE TESTED PER TITLE 24, PART 2, SECTION 1910A.2. TEST OF REINFORCING BARS MAY BE WAIVED PROVIDED CERTIFIED MILL TEST REPORTS ARE PROVIDED FOR EACH SHIPMENT OF SUCH REINFORCEMENT.
4. DESIGN SOIL BEARING CAPACITY: 1500 PSF,
   (1/3 INCREASE IN SOIL BEARING CAPACITY NOT PERMITTED FOR WIND & SEISMIC LOAD COMBINATIONS UNLESS USING ALTERNATIVE BASIC LOAD COMBINATIONS PER CBC SECTION 1605A.3.2)
5. THE REGISTERED DESIGN PROFESSIONAL IN RESPONSIBLE CHARGE SHALL VERIFY THE NET AREA OF THE UNDER-FLOOR VENTING IS EQUAL TO OR LARGER THAN THE VENT AREA REQUIRED (AS SHOWN ON THE ADJACENT TABLE).
6. EXPANSIVE, ORGANIC, LOOSE, OR SOFT SOILS SHALL NOT BE UTILIZED FOR SUPPORT OF FOOTINGS. AMS AND ITS CONSULTANTS ARE NOT RESPONSIBLE FOR THE EFFECTS DUE TO EXPANSIVE SOILS OR SETTLEMENTS DUE TO ORGANIC, LOOSE, OR SOFT SOILS. IT IS THE OWNER'S RESPONSIBILITY TO ENSURE COMPLIANCE WITH THESE REQUIREMENTS.

MODULE SCHEDULE AND VENTING

NOMINAL BLDG SIZE (FT)	TOTAL # OF 12' WIDE MODULES	"A" TOTAL # OF CENTER MODULES	"B" TOTAL FNDN WIDTH[1]	TOTAL NOMINAL FLOOR AREA (FT^2)	NET FREE VENT AREA REQ'D[2] (FT^2)	IF 4'x12" VENTS ARE USED SOLELY		IF 4'x18" VENTS ARE USED SOLELY	
						"C" MIN. TOTAL VENTS REQ'D[3]	NET FREE VENT AREA PROVIDED[3] (FT^2)	"C" MIN. TOTAL VENTS REQ'D[3]	NET FREE VENT AREA PROVIDED[3] (FT^2)
☐ 24'x40'	2	0	23'-8½"	960	6.4	3	8.7	2	8.8
☐ 36'x40'	3	1	35'-6¾"	1440	9.6	4	11.6	3	13.1
☐ 48'x40'	4	2	47'-5"	1920	12.8	5	14.6	4	17.5
☐ 60'x40'	5	3	59'-3¼"	2400	16.0	6	17.5	4	17.5
☐ 72'x40'	6	4	71'-1½"	2880	19.2	7	20.4	5	21.9
☐ 84'x40'	7	5	82'-11¾"	3360	22.4	8	23.3	6	26.3
☐ 96'x40'	8	6	94'-10"	3840	25.6	9	26.2	6	26.3
☐ 108'x40'	9	7	106'-8¼"	4320	28.8	10	29.2	7	30.7
☐ 120'x40'	10	8	118'-6½"	4800	32.0	11	32.1	8	35.0

NOTES:

TOTAL FOUNDATION WIDTH INCLUDES ¼" PER MODULE CONSTRUCTION TOLERANCE.

1. UNLESS NOTED OTHERWISE, DIMENSIONS ARE FROM FACE OF CONCRETE TO FACE OF CONCRETE (FOC TO FOC)
2. THE NUMBER OF VENTS REQUIRED IS BASED ON THE VENT NET FREE AREA (NFA) PROVIDED BEING GREATER OR EQUAL TO THE VENT NFA REQUIRED. VENT NFA REQUIRED IS BASED ON A 1:150 VENTILATION RATIO OF THE NOMINAL BUILDING FLOOR AREA. VENT NFA PROVIDED IS THE ACTUAL OPEN AREA WITH A VENT GROSS AREA REDUCTION PERCENTAGE OF 73% & NUMBER OF VENTS PROVIDED.

   $NFA_{REQUIRED} = A_{FLOOR} / 150$ $NFA_{PROVIDED} > NFA_{REQUIRED}$ $A_{VENT,GROSS}$ x 73% x (# OF VENTS) > $NFA_{REQUIRED}$

4. REQUIRED VENTING MAY BE ACHIEVED BY A COMBINATION OF ACCESS VENT(S) AND VENTS OF DIFFERENT SIZES BASED ON THE VALUES LISTED BELOW.

   4'x12" VENTS x 0.73 x (# OF VENTS) = 2.92 FT^2 x (# OF VENTS) **4'x18" VENTS** x 0.73 x (# OF VENTS) = 4.38 FT^2 x (# OF VENTS)
   ACCESS VENTS - 2' x1.5' x (# OF VENTS) = 3.00 FT^2 x (# OF VENTS)

IDENTIFICATION STAMP
DIV. OF THE STATE ARCHITECT
APP: 03-124589 INC:
REVIEWED FOR
SS ☑ FLS ☑ ACS ☑
DATE: 04/15/2025

AMS®
American Modular Systems
787 Spreckels Ave., Manteca, CA 95336
Phone (209) 825-1921 Fax (209) 825-7018
www.americanmodular.com

INTELLECTUAL-PROPERTY & PROPRIETARY RIGHTS STATEMENT
COPYRIGHT © AMERICAN MODULAR SYSTEMS (AMS)
AMS OWNS ALL COPYRIGHT AND OTHER INTELLECTUAL-PROPERTY AND PROPRIETARY RIGHTS IN THE DOCUMENTS PROVIDED HEREWITH. THE DESIGNS AND INFORMATION HEREIN CERTAIN ELEMENTS SHOWN IN THESE DOCUMENTS ARE REGISTERED TRADEMARKS OF AMS. ALL PATENTABLE MATERIALS CONTAINED IN THESE DOCUMENTS AND ORIGINATING WITH AMS WILL REMAIN THE SOLE PROPERTY OF AMS. THESE DRAWING, SPECIFICATIONS AND THE MATERIAL CONTAINED HEREIN MAY NOT BE REPRODUCED, TRANSMITTED, COPIED, DISTRIBUTED, MODIFIED, OR OTHERWISE DISPOSED OF (DIRECTLY OR INDIRECTLY) AND MAY NOT BE USED (IN WHOLE OR IN PART) TO ASSIST IN THE CONSTRUCTION, DESIGN, OR OTHER MAKING OF, OR FOR THE PURPOSE OF FURNISHING ANY INFORMATION FOR THE CONSTRUCTION, DESIGN, OR OTHER MAKING OF, ANY BUILDINGS (MODULAR OR OTHERWISE), DRAWINGS, SPECIFICATIONS, PRINTS, APPARATUS, OR PARTS THEREOF, EXCEPT AS EXPRESSLY PERMITTED BY WRITTEN CONSENT OF, OR IN A WRITTEN AGREEMENT WITH, AMS. SUBMITTAL OR DISTRIBUTION TO MEET OFFICIAL REGULATORY REQUIREMENTS WILL NOT BE CONSTRUED AS PUBLICATION IN DEROGATION OF AMS'S COPYRIGHT OR OTHER INTELLECTUAL-PROPERTY OR PROPRIETARY RIGHTS.

PRE-CHECKED SET NAME
24' x 40' THRU 120' x 40'
STANDARD MODULAR BUILDING
(HIGH SEISMIC)
FORM®

SITE SPECIFIC PROJECT NAME
.
.
.

APPROVED
DIV. OF THE STATE ARCHITECT
APP: 04-122051 PC
REVIEWED FOR
SS ☑ FLS ☑ ACS ☑ CG ☑
DATE: 04/03/2024

☐ 2022 CBC PRE-CHECK (PC) DOCUMENT
A SEPARATE PRE-SITE APPLICATION & CONSTRUCTION PLAN IS REQUIRED

MANUFACTURER PROFESSIONAL OF RECORD ON PC

LICENSED ARCHITECT PATRICK A. MANGANO No. C12631 Ren. 3-31-25 STATE OF CALIFORNIA

REGISTERED PROFESSIONAL ENGINEER Mahesh D. Patel No. S3380 STRUCTURAL STATE OF CALIFORNIA RST#22114

03/13/2024

THESE DRAWINGS ARE PRELIMINARY AND NOT FOR CONSTRUCTION UNLESS STAMPED & SIGNED BY THE DESIGN PROFESSIONAL OF RECORD.

REVISIONS
1
2
3
4

DRAWN BY:	AA
SCALE:	AS NOTED
DATE:	MM/DD/YY
PROJECT NO:	XXXX-22

SHEET TITLE:
CONCRETE FOUNDATION PLAN
(50 PSF LIVE LOAD + 15 PSF
FLOOR PARTITION LOAD)

SHEET NUMBER:
S1.1

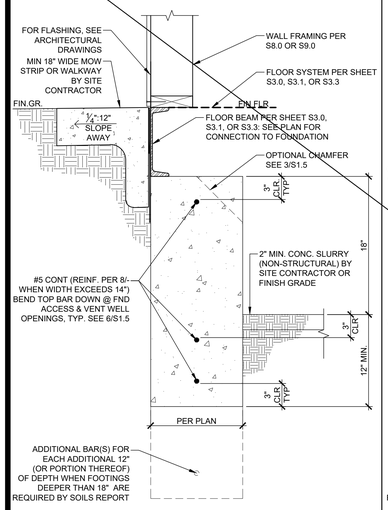

TYP. FOOTING - BELOW GRADE SCALE: 1-1/2" = 1'-0" 1

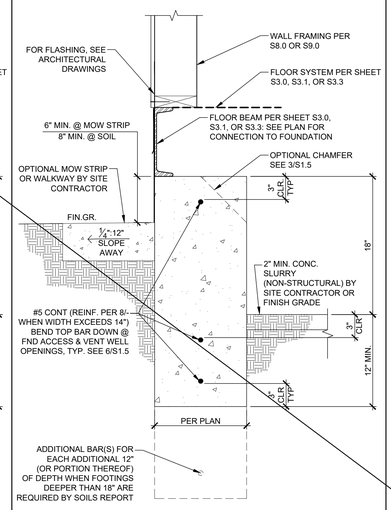

TYP. FOOTING - ... SCALE: 1-1/2" = 1'-0" 2

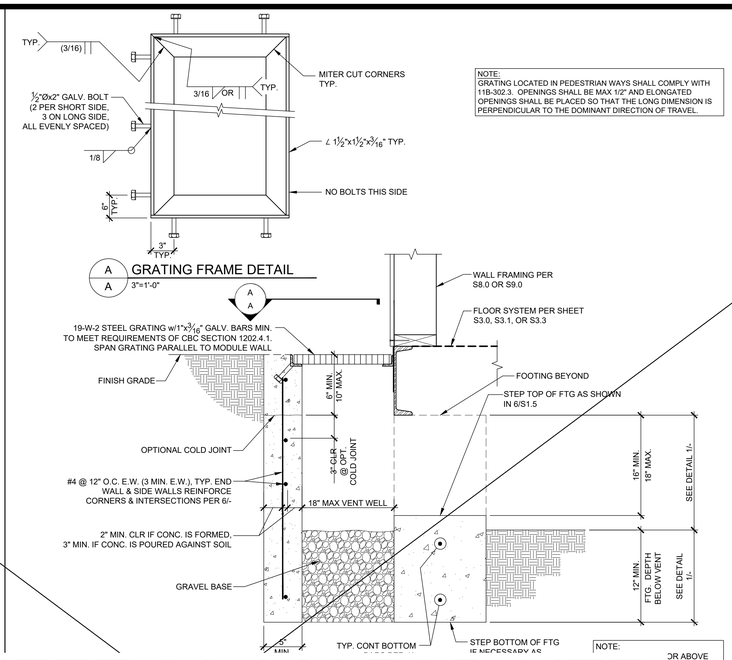

NOTE:
GRATING LOCATED IN PEDESTRIAN WAYS SHALL COMPLY WITH 11B-302.3. OPENINGS SHALL BE MAX 1/2" AND ELONGATED OPENINGS SHALL BE PLACED SO THAT THE LONG DIMENSION IS PERPENDICULAR TO THE DOMINANT DIRECTION OF TRAVEL.

NOTE:
... OR ABOVE ...AIL.

...LE: 1-1/2" = 1'-0" 2

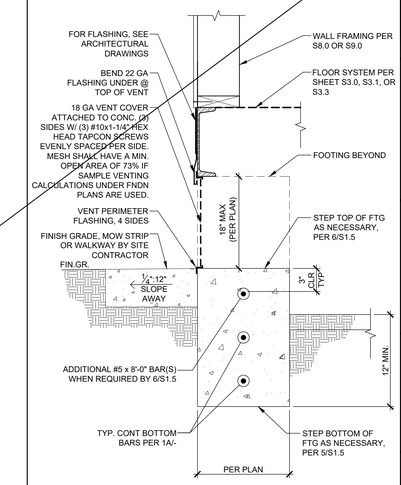

NOTE:
SEE DETAIL 2/- FOR INFO NOT SHOWN

TYP. VENT DETAIL - ABOVE GRADE SCALE: 1-1/2" = 1'-0" 2A

SEE SHEET S1.4-M FOR SITE SPECIFIC SHEET

NOT USED 3

NOT USED 3A

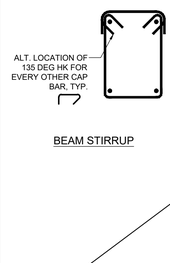

TYPICAL HOOP-STIRRUP DETAIL SCALE: 1-1/2" = 1'-0" 5

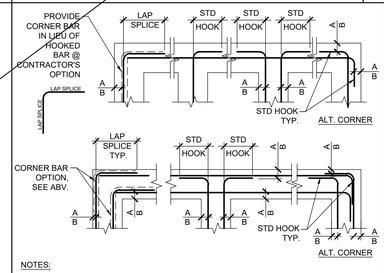

NOTES:
1. LAP SPLICE SHALL BE TYPICAL CLASS B SPLICE PER DETAIL 9/-.
2. HOOK LENGTH SHALL BE MIN 12d OR 12", WHICHEVER IS GREATER, WHERE d = DIAMETER OF THE BAR.
3. "A" = 2" COVER @ FORMED FOOTING
4. "B" = 3" COVER @ UNFORMED FOOTING

TYPICAL FOOTING REINFORCING SCALE: 1-1/2" = 1'-0" 6

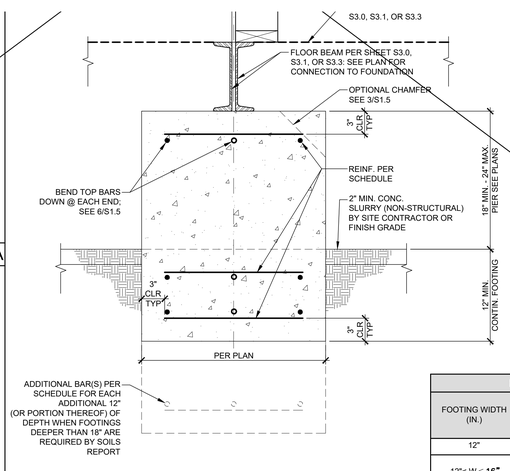

REINFORCING SCHEDULE		
FOOTING WIDTH (IN.)	CONTINUOUS LONGITUDINAL REINFORCING (EACH HORIZ. LEVEL)	TRANSVERSE REINFORCING (EACH HORIZ. LEVEL)
12"	(1) #5	NOT REQ'D
12"< W ≤ 16"	(1) #6	NOT REQ'D
	(2) #5	#4 @ 24" O.C.
16"< W ≤ 24"	(2) #5	#4 @ 24" O.C.
24"< W ≤ 36"	(3) #5	#4 @ 24" O.C.
36"< W ≤ 48"	(4) #5	#4 @ 24" O.C.

TYPICAL INTERIOR MODLINE FOOTING SECTION 8

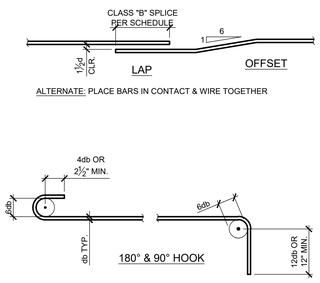

BAR SIZE #	DEVELOPMENT LENGTH[3]			TYPICAL CLASS B LAP SPLICE LENGTH[4]					
	3000 PSI (IN)	3500 PSI (IN)	4000+ PSI (IN)	3000 PSI		3500 PSI		4000+ PSI	
				TOP[2] (IN)	BOTTOM (IN)	TOP[2] (IN)	BOTTOM (IN)	TOP[2] (IN)	BOTTOM (IN)
3	13	12	12	21	16	20	16	20	16
4	17	16	15	28	22	26	20	24	19
5	21	20	18	35	27	33	25	30	24
6	25	23	22	42	32	39	30	36	28

NOTES:
1. THE ABOVE TABLE IS BASED ON GRADE 60 STEEL
2. TOP BARS ARE ANY BARS WITH MORE THAN 12" OF CONCRETE PLACED BELOW.
3. DEVELOPMENT LENGTH IS CALCULATED FOR TYP. BARS - Ψ_t=1.0
4. LAP SPLICES IN ADJACENT BARS SHALL BE STAGGERED, UNLESS OTHERWISE NOTED.

TYP. REINFORCING LAPS & BENDS SCALE: 1-1/2" = 1'-0" 9

IDENTIFICATION STAMP
DIV. OF THE STATE ARCHITECT
APP: 03-124589 INC:
REVIEWED FOR
SS ☑ FLS ☑ ACS ☑
DATE: 04/15/2025

AMS®
American Modular Systems
787 Spreckels Ave., Manteca, CA 95336
Phone (209) 825-1921 Fax (209) 825-7018
www.americanmodular.com

INTELLECTUAL-PROPERTY & PROPRIETARY RIGHTS STATEMENT
COPYRIGHT © AMERICAN MODULAR SYSTEMS (AMS)
AMS OWNS ALL COPYRIGHT AND OTHER INTELLECTUAL-PROPERTY AND PROPRIETARY RIGHTS IN THESE DRAWINGS, SPECIFICATIONS, AND THE MATERIAL CONTAINED HEREIN. CERTAIN ELEMENTS SHOWN IN THESE DOCUMENTS ARE REGISTERED TRADEMARKS OF AMS. ALL PATENTABLE MATERIALS CONTAINED IN THESE DOCUMENTS AND ORIGINATING WITH AMS WILL REMAIN THE SOLE PROPERTY OF AMS. THESE DRAWING, SPECIFICATIONS AND THE MATERIAL CONTAINED HEREIN MAY NOT BE REPRODUCED, TRANSMITTED, COPIED, DISTRIBUTED, MODIFIED, OR OTHERWISE DISPOSED OF (DIRECTLY OR INDIRECTLY) AND MAY NOT BE USED (IN WHOLE OR IN PART) TO ASSIST IN THE CONSTRUCTION, DESIGN, OR OTHER MAKING OF, OR FOR THE PURPOSE OF FURNISHING ANY INFORMATION FOR THE CONSTRUCTION, DESIGN, OR OTHER MAKING OF, ANY BUILDINGS (MODULAR OR OTHERWISE), DRAWINGS, SPECIFICATIONS, PRINTS, APPARATUS, OR PARTS THEREOF, EXCEPT AS EXPRESSLY PERMITTED BY WRITTEN CONSENT OF, OR IN A WRITTEN AGREEMENT WITH, AMS. SUBMITTAL OR DISTRIBUTION TO MEET OFFICIAL REGULATORY REQUIREMENTS WILL NOT BE CONSTRUED AS PUBLICATION IN DEROGATION OF AMS'S COPYRIGHT OR OTHER INTELLECTUAL-PROPERTY OR PROPRIETARY RIGHTS.

PRE-CHECKED SET NAME
24' x 40' THRU 120' x 40'
STANDARD MODULAR BUILDING
(HIGH SEISMIC)
FORM®

SITE SPECIFIC PROJECT NAME

APPROVED
DIV. OF THE STATE ARCHITECT
APP: 04-122051 PC
REVIEWED FOR
SS ☑ FLS ☑ ACS ☑ CG ☑
DATE: 04/03/2024

☐ 2022 CBC PRE-CHECK (PC) DOCUMENT
A SEPARATE PERMIT AND CLASSIFICATION DETERMINATION IS REQUIRED.

MANUFACTURER PROFESSIONAL OF RECORD ON PC

LICENSED ARCHITECT — PATRICK CONNELLY — No. C12631 — Ren. 3-31-25 — STATE OF CALIFORNIA

REGISTERED PROFESSIONAL ENGINEER — MARIA D. FIGUEROA — No. S3380 — STRUCTURAL — STATE OF CALIFORNIA — RST#2214

03/13/2024

THESE DRAWINGS ARE PRELIMINARY AND NOT FOR CONSTRUCTION UNLESS STAMPED & SIGNED BY THE DESIGN PROFESSIONAL OF RECORD.

REVISIONS
1
2
3
4

DRAWN BY:	AA
SCALE:	AS NOTED
DATE:	MM/DD/YY
PROJECT NO:	XXXX-22

SHEET TITLE:
CONCRETE FOUNDATION DETAILS

SHEET NUMBER:
S1.4

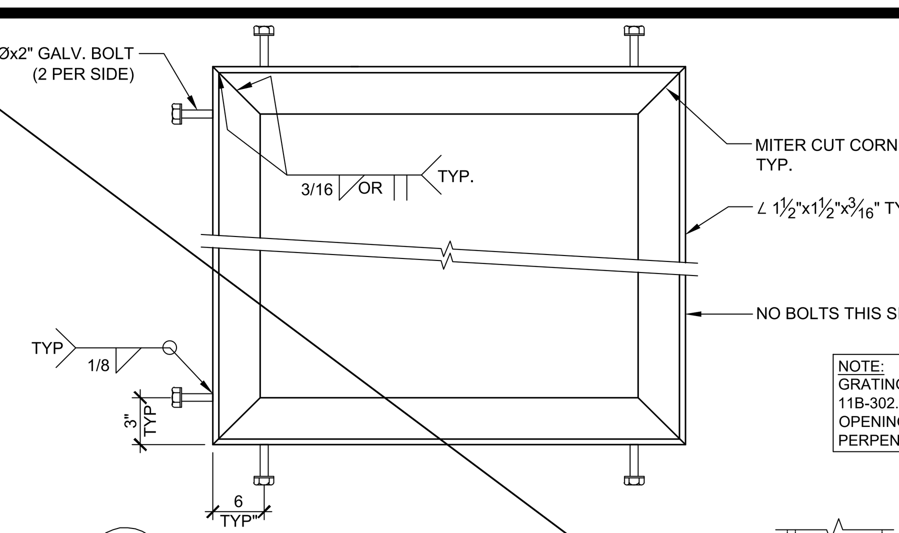

NOTE: GRATING LOCATED IN PEDESTRIAN WAYS SHALL COMPLY WITH 11B-302.3. OPENINGS SHALL BE MAX 1/2" AND ELONGATED OPENINGS SHALL BE PLACED SO THAT THE LONG DIMENSION IS PERPENDICULAR TO THE DOMINANT DIRECTION OF TRAVEL.

A/A GRATING FRAME DETAIL
3"=1'-0"

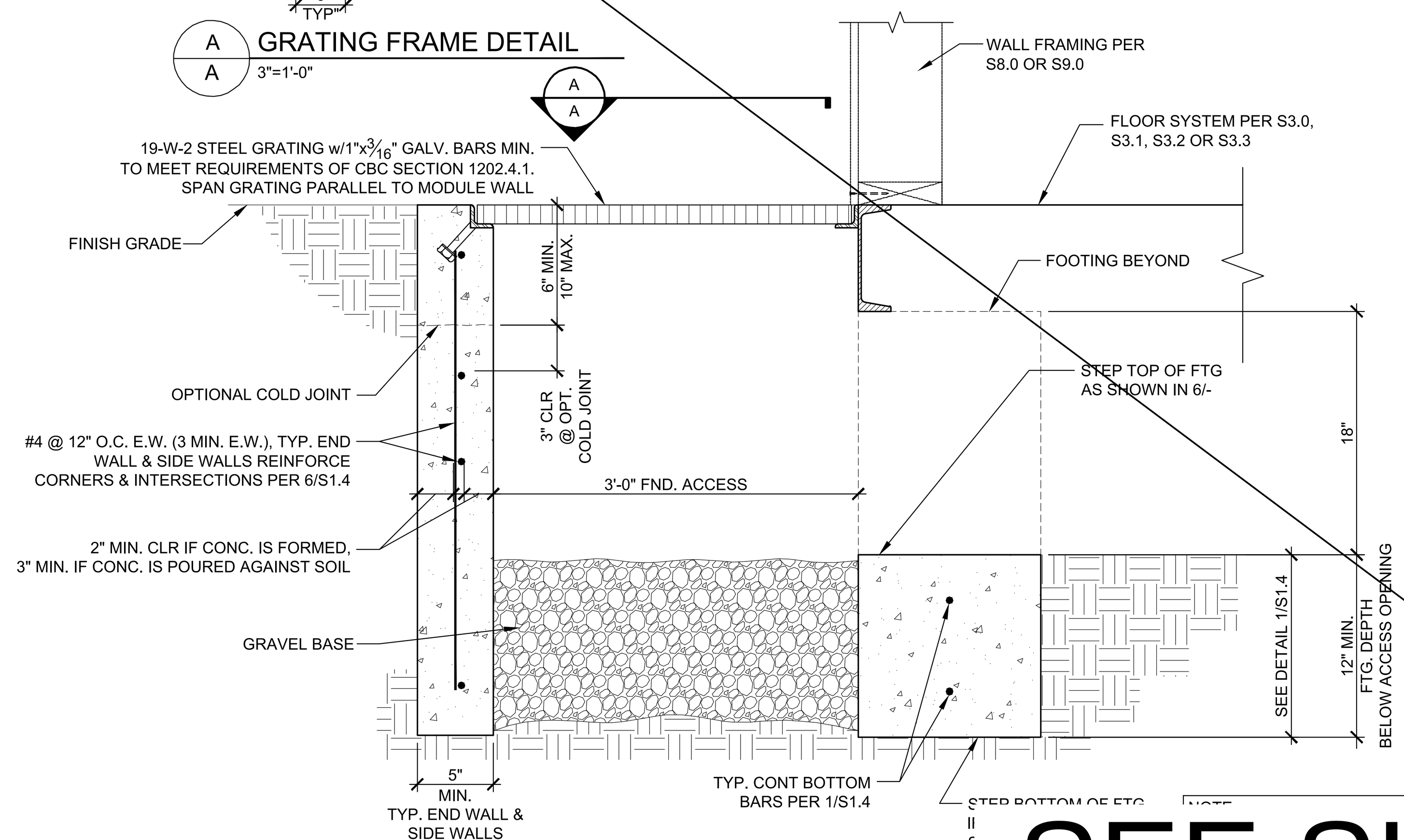

BELOW GRADE SECTION / ACCESS WELL DETAIL

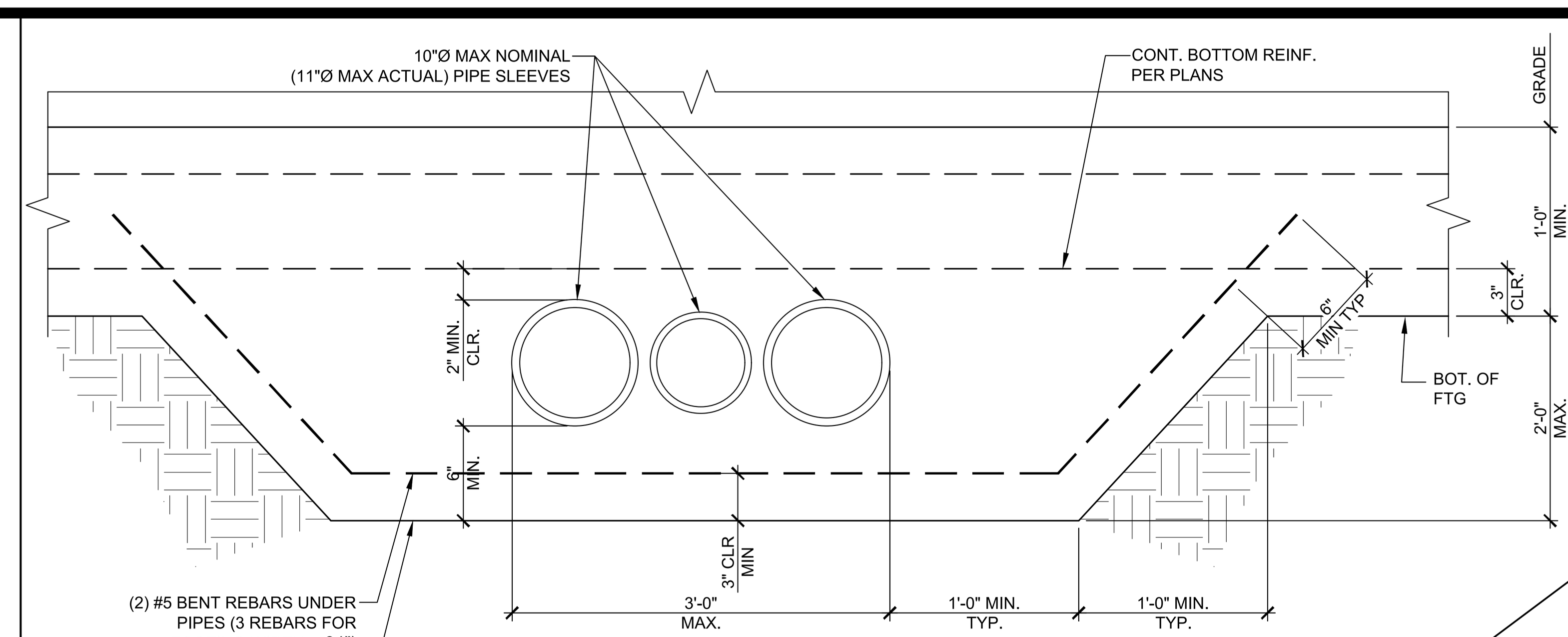

OPTION A

NOTES:
1. AS AN OPTION TO INDIVIDUAL PIPE SLEEVES, THE FOOTING MAY BE BLOCKED OUT FOR MULTIPLE PIPES (10" HIGH x 36" WIDE MAX @ OPTION "A", 10" HIGH x 24" WIDE MAX OPTION "B") OR INDIVIDUALLY. PROVIDE 1" MIN. CLEARANCE ALL AROUND BETWEEN PIPES/CONDUITS & BLOCKOUT/SLEEVES & FILL w/ CAULK.
2. CONCRETE SHALL BE WELL CONSOLIDATED AROUND & UNDER PIPES, CONDUITS, SLEEVES, BLOCKOUTS TO PREVENT CONCRETE VOIDS.
3. PROVIDE 2" CLEAR MIN BETWEEN BLOCKOUT SLEEVES AND REINFORCEMENT.
4. WHERE TOP OF PIPES/CONDUITS ARE 12" OR MORE BELOW THE BOTTOM OF THE FOOTING, THICKENED FOOTING AROUND PIPES/CONDUITS IS NOT REQUIRED. BACKFILL & COMPACT TO 95% OVER PIPES / CONDUITS PRIOR TO PLACING FOOTING.

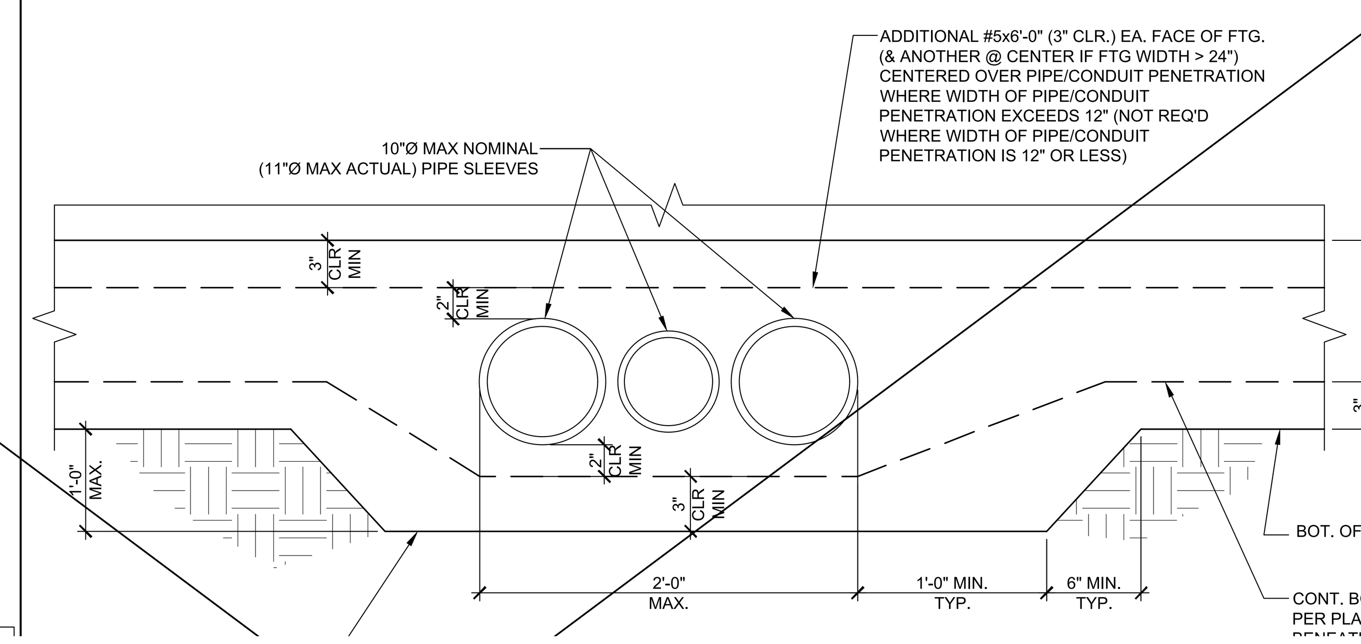

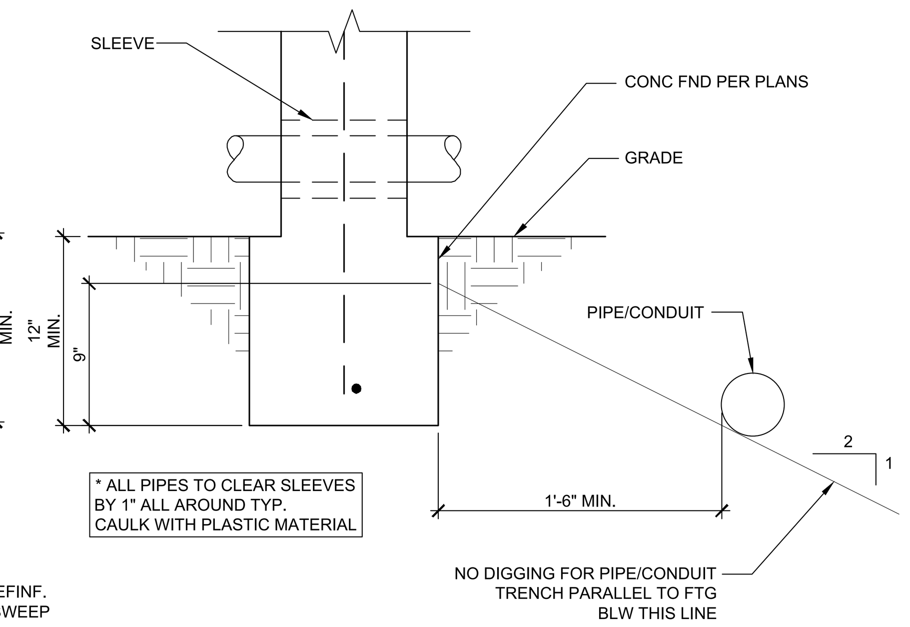

SCALE: 1-1/2"=1'-0" | 2

SEE SHEET S1.5-M FOR SITE SPECIFIC SHEET

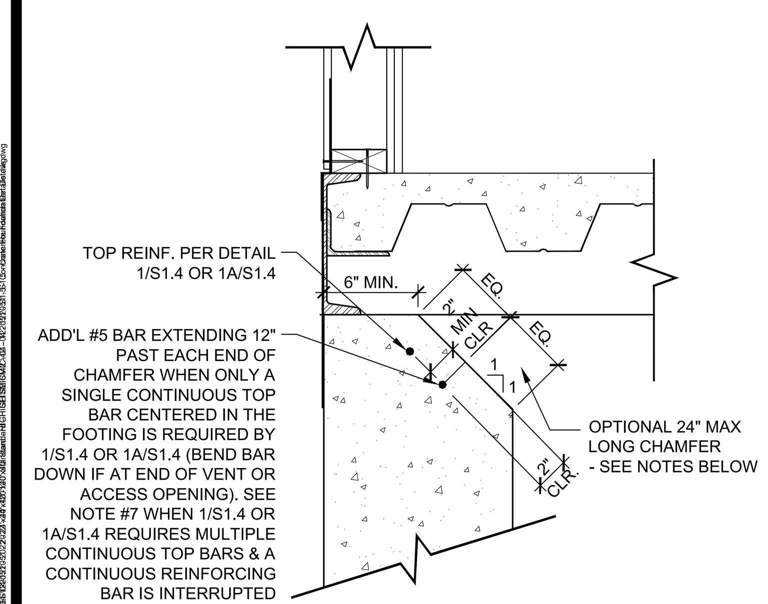

NOTES:
1. CHAMFER MAY BE LOCATED ALONG ALL LOCATIONS OF THE PERIMETER OF THE BUILDING FOUNDATION UNLESS OTHERWISE NOTED ON PLAN OR AS DESCRIBED BELOW.
2. CHAMFER SHALL NOT BE LOCATED WITHIN 3'-6" OF THE CORNERS OF THE BUILDING FOUNDATION.
3. CHAMFERS AT FRONT OR REAR END WALL FOOTINGS SHALL NOT BE LOCATED WITHIN 2'-0" OF A MODULE LINE
4. CHAMFER SHALL NOT BE LOCATED WITHIN 1'-6" OF ANCHORAGE EMDED. PLATE LOCATION.
5. CHAMFERS SHALL NOT BE LOCATED WITHIN 1'-6" OF UTILITY OPENINGS PER SHEET S1.7
6. CHAMFER MAY OCCUR AT THE ENDS OF VENT OR ACCESS OPENINGS (ALONG THE INTERIOR EDGE OF THE STEMWALL PARALLEL TO THE FLOOR BEAM AS SHOWN ABOVE)
7. BOTTOM OF CHAMFER SHALL NOT BE LOWER THAN FINISHED GRADE
8. WHEN 1/S1.4 OR 1A/S1.4 REQUIRED MULTIPLE CONTINUOUS TOP BARS AND THE CHAMFER INTERRUPTS A CONTINUOUS LONGITUDINAL REINFORCING BAR, PROVIDE AN ADDITIONAL #5 x 6'-0" BAR 2" CLEAR AND CENTERED ON THE CHAMFER (BEND BAR DOWN IF AT END OF VENT OR ACCESS OPENING)
9. FOR ALL ITEMS NOT SHOWN OR NOTED SEE DETAILS 1/S1.4 & 1A/S1.4.

CHAMFER DETAILS @ PERIMETER — SCALE:1 1/2"=1'-0" | 3

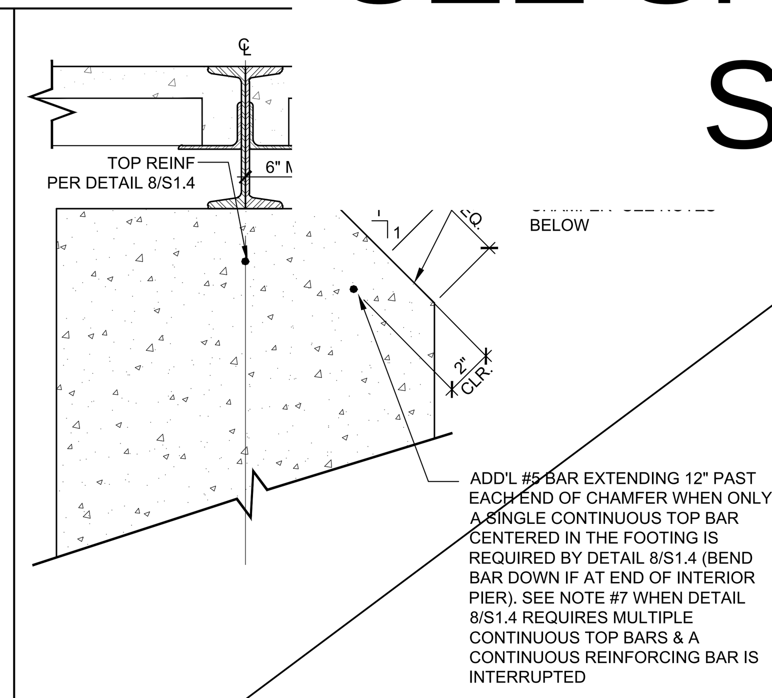

NOTES:
1. CHAMFER MAY BE LOCATED ALONG ALL LOCATIONS OF INTERIOR FOOTING OF THE BUILDING FOUNDATION UNLESS OTHERWISE NOTED ON PLAN OR AS DESCRIBED BELOW.
2. CHAMFER SHALL NOT BE LOCATED WITHIN 2'-6" OF THE ENDS OF THE BUILDING.
3. CHAMFER MAY OCCUR ON BOTH SIDES OF THE FOOTING CONCURRENTLY.
4. CHAMFER SHALL NOT BE LOCATED WITHIN 1'-6" OF UTILITY OPENING PER SHEET S1.7
5. CHAMFER MAY OCCUR AT THE ENDS OF INTERIOR PIERS (ALONG THE SIDE OF THE PIER PARALLEL TO THE FLOOR BEAMS AS SHOWN ABOVE)
6. BOTTOM OF CHAMFER SHALL NOT BE LOWER THAN FINISHED GRADE
7. WHEN DETAIL 8/S1.4 REQUIRES MULTIPLE CONTINUOUS TOP BARS AND THE CHAMFER INTERRUPTS A CONTINUOUS LONGITUDINAL REINFORCING BAR, PROVIDE AN ADDITIONAL #5 x 6'-0" BAR 2" CLEAR AND CENTERED ON THE CHAMFER (BEND BAR DOWN IF AT END OF INTERIOR PIER)
8. FOR ALL ITEMS NOT SHOWN OR NOTED - SEE DETAIL 8/S1.4.

CHAMFER DETAILS @ INTERIOR — SCALE:1 1/2"=1'-0" | 4

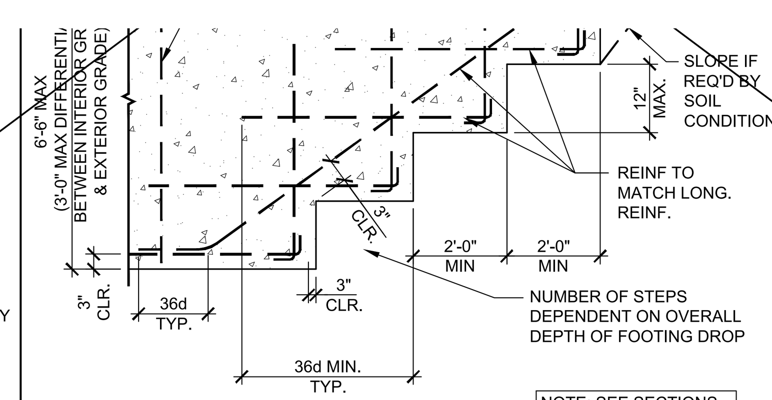

NOTE: SEE SECTIONS FOR FTG WIDTH & REINF

TYPICAL STEPPED FOOTING DETAIL — SCALE:1 1/2"=1'-0" | 5

NOTE: SEE SECTIONS FOR FTG WIDTH & REINF

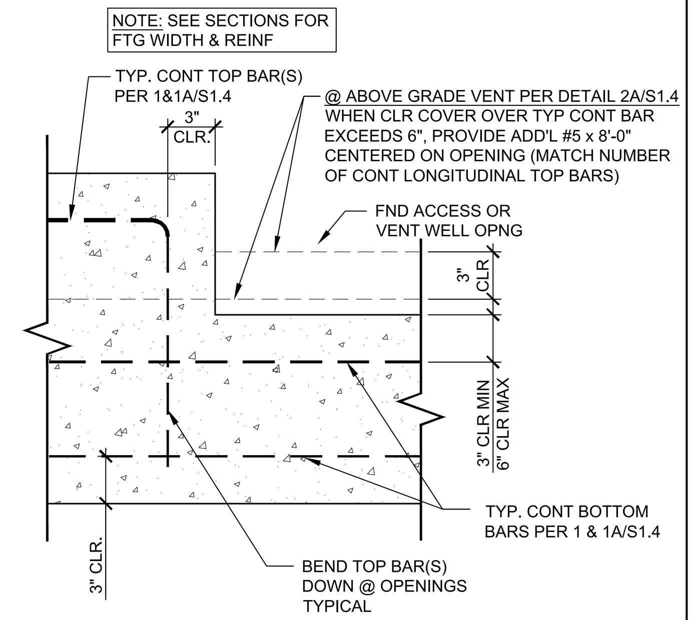

VENT/ACCESS OPENING DETAIL — SCALE:1 1/2"=1'-0" | 6

NOT USED | 7

IDENTIFICATION STAMP
DIV. OF THE STATE ARCHITECT
APP: 03-124589 INC:
REVIEWED FOR
SS ☑ FLS ☑ ACS ☑
DATE: 04/15/2025

American Modular Systems
787 Spreckels Ave., Manteca, CA 95336
Phone (209) 825-1921 Fax (209) 825-7018
www.americanmodular.com

INTELLECTUAL-PROPERTY & PROPRIETARY RIGHTS STATEMENT
COPYRIGHT © AMERICAN MODULAR SYSTEMS (AMS)
AMS OWNS ALL COPYRIGHT AND OTHER INTELLECTUAL-PROPERTY AND PROPRIETARY RIGHTS IN THESE DRAWINGS, SPECIFICATIONS, AND THE MATERIAL CONTAINED HEREIN. CERTAIN ELEMENTS SHOWN IN THESE DOCUMENTS ARE REGISTERED TRADEMARKS OF AMS. ALL PATENTABLE MATERIALS CONTAINED IN THESE DOCUMENTS AND ORIGINATING WITH AMS WILL REMAIN THE SOLE PROPERTY OF AMS. THESE DRAWING, SPECIFICATIONS, AND THE MATERIAL CONTAINED HEREIN MAY NOT BE REPRODUCED, TRANSMITTED, COPIED, DISTRIBUTED, MODIFIED, OR OTHERWISE DISPOSED OF (DIRECTLY OR INDIRECTLY) AND MAY NOT BE USED (IN WHOLE OR IN PART) TO ASSIST IN THE CONSTRUCTION, DESIGN, OR OTHER MAKING OF, OR FOR THE PURPOSE OF FURNISHING ANY INFORMATION FOR THE CONSTRUCTION, DESIGN, OR OTHER MAKING OF, ANY BUILDINGS (MODULAR OR OTHERWISE), DRAWINGS, SPECIFICATIONS, PRINTS, APPARATUS, OR PARTS THEREOF, EXCEPT AS EXPRESSLY PERMITTED BY WRITTEN CONSENT OF, OR IN A WRITTEN AGREEMENT WITH, AMS. SUBMITTAL OR DISTRIBUTION TO MEET OFFICIAL REGULATORY REQUIREMENTS WILL NOT BE CONSTRUED AS PUBLICATION IN DEROGATION OF AMS'S COPYRIGHT OR OTHER INTELLECTUAL-PROPERTY OR PROPRIETARY RIGHTS.

PRE-CHECKED SET NAME
24' x 40' THRU 120' x 40' STANDARD MODULAR BUILDING (HIGH SEISMIC)
FORM

SITE SPECIFIC PROJECT NAME
.
.
.

APPROVED
DIV. OF THE STATE ARCHITECT
APP: 04-122051 PC
REVIEWED FOR
SS ☑ FLS ☑ ACS ☑ CG ☑
DATE: 04/03/2024

☐ 2022 CBC PRE-CHECK (PC) DOCUMENT
A SEPARATE PROJECT APPLICATION FOR CONSTRUCTION IS REQUIRED.

MANUFACTURER PROFESSIONAL OF RECORD ON PC
LICENSED ARCHITECT RANDAL PATRICK CAVANAGH No. C12631 Ren. 3-31-25 STATE OF CALIFORNIA
REGISTERED PROFESSIONAL ENGINEER MANNY D. FRESCH No. S3380 STRUCTURAL STATE OF CALIFORNIA
RST#22214
03/13/2024
THESE DRAWINGS ARE PRELIMINARY AND NOT FOR CONSTRUCTION UNLESS STAMPED & SIGNED BY THE DESIGN PROFESSIONAL OF RECORD.

REVISIONS
1
2
3
4

DRAWN BY:	AA
SCALE:	AS NOTED
DATE:	MM/DD/YY
PROJECT NO:	XXXX-22

SHEET TITLE:
CONCRETE FOUNDATION DETAILS

SHEET NUMBER:
S1.5

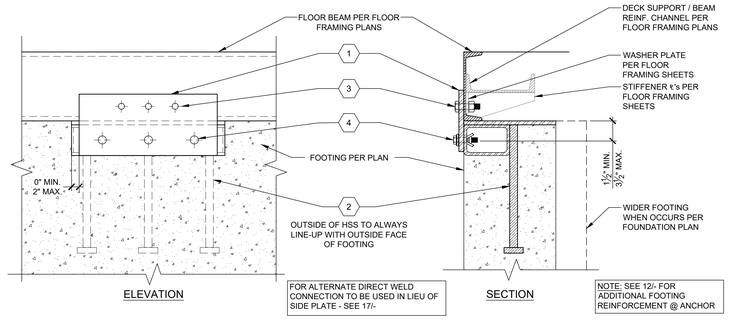

STANDARD ANCHORAGE DETAIL 2

SCALE: 1-1/2" = 1'-0"

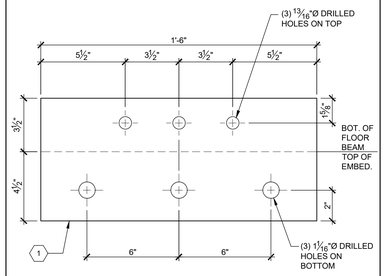

SIDE PLATE DETAIL 3

SCALE: 3" = 1'-0"

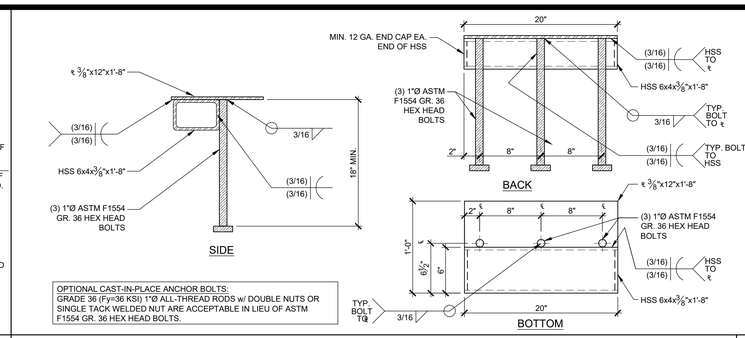

EMBEDDED ANCHOR DETAIL 5

SCALE: 1-1/2" = 1'-0"

1. ½"x8"x1'-6" (36 KSI) OR ⅜"x8"x1'-6" (50 KSI) SIDE PLATE. LOCATION PER PLAN - SEE 3/-
2. EMBEDDED ANCHOR. LOCATION PER PLAN - SEE 5/-
3. (3) ¾"Ø M.B. THRU-BOLTED THROUGH SIDE ℄ & FLOOR BEAM w/ 13/16"Ø HOLES - SEE 8/- FOR OPTIONAL SHIM DETAIL.
4. (3) 5/8"Ø LHBM16 "HOLLO-BOLT" EXPANSION BOLTS PER ICC ESR-3330 THROUGH SIDE ℄ INTO THE HSS OF THE EMBEDDED ANCHOR w/ 11/16"Ø HOLES
   - SEE GENERAL NOTES FOR SPECS. & INSTALLATION REQUIREMENTS,
   - SEE 13/- FOR OPTIONAL SHIM DETAIL.
5. (4) #3 VERTICAL HOOPS PER 12/-, FORMED PER 5/S1.4 & EVENLY SPACED @ ANCHORS.
6. (2) #4 BENT BARS CENTERED ON ANCHORS - (1) EA. SIDE OF ANCHORS.

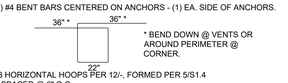

* BEND DOWN @ VENTS OR AROUND PERIMETER @ CORNER.

7. #3 HORIZONTAL HOOPS PER 12/-, FORMED PER 5/S1.4 & SPACED @ 6" O.C.
8. ADDITIONAL #5x8'-0" CENTERED @ ANCHOR. BEND DOWN @ VENTS OR AROUND PERIMETER @ CORNERS.

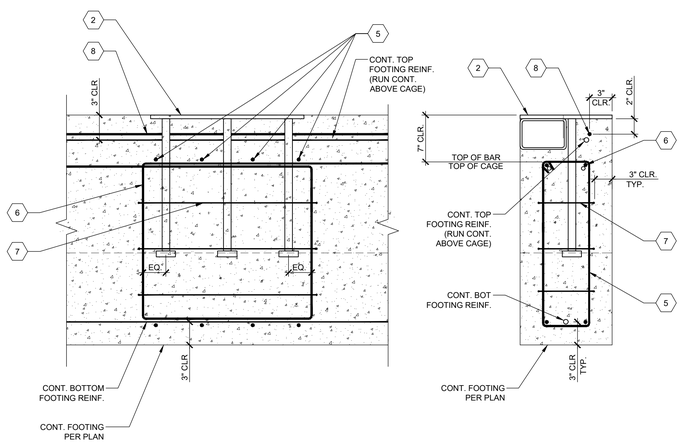

EMBEDDED ANCHOR REINFORCEMENT DETAIL 12

SCALE: 1-1/2" = 1'-0"

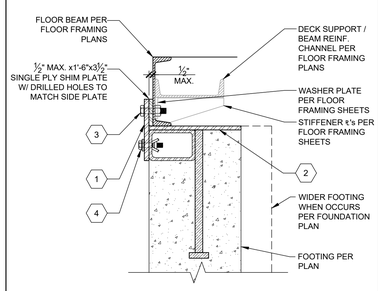

OPT. SHIM @ TOP 8

SCALE: 1-1/2" = 1'-0"

NOT USED 9

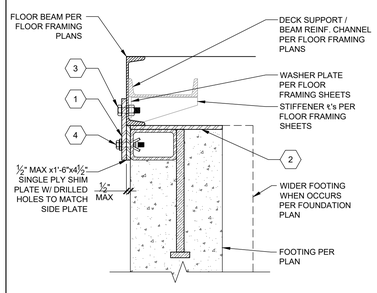

OPT. SHIM @ BOT 13

SCALE: 1-1/2" = 1'-0"

NOT USED 14

KEY NOTES

1. DETAILS ON THIS SHEET SHALL APPLY WHERE UPGRADED ANCHORAGE IS SPECIFIED ON THE FOUNDATION PLANS.
2. EACH ANCHORAGE POINT SPECIFIED ON PLAN SHALL CONSIST OF AN EMBEDDED ANCHOR AND EITHER A BOLTED SIDE PLATE OR ALTERNATE DIRECT WELD AS DETAILED ON DETAIL 2/-.
3. ANCHOR REINFORCEMENT PER DETAIL 12/- SHALL BE PLACED AT ALL EMBEDDED ANCHOR LOCATIONS.
4. EXPANSION BOLTS SHALL BE "HOLLO-BOLTS" BY LINDAPTER OR AN EQUIVALENT ICC ACCEPTED BOLT.
5. "HOLLO-BOLTS" ARE SPECIFIED AND TO BE INSTALLED PER ICC-ES REPORT ESR-3330 WITH AN INSTALLATION TIGHTENING TORQUE OF 140 FT.-LBS & ARE TO BE SUBJECT TO THE MANUFACTURER'S INSPECTION PROCEDURES FOUND ON SHEET D1 OF THESE DRAWINGS.
6. "HOLLO-BOLT" HEADS MAY BE HEXAGONAL OR COUNTERSUNK, AS SHOWN BELOW (NOT TO SCALE). FLUSH FIT "HOLLO-BOLT" OPTION NOT PERMITTED.

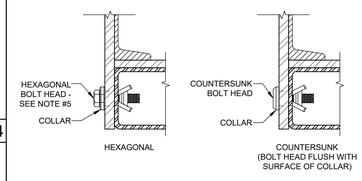

GENERAL NOTES

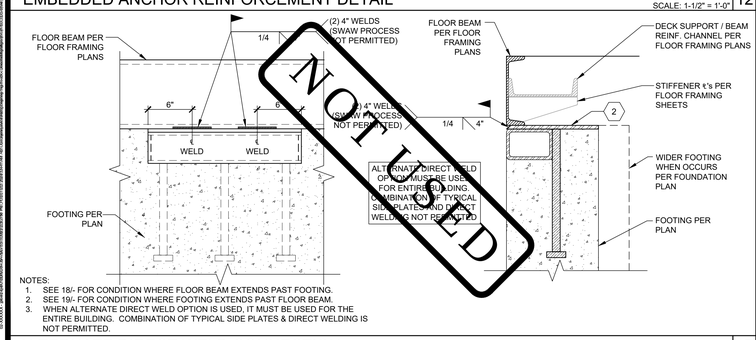

NOTES:
1. SEE 18/- FOR CONDITION WHERE FLOOR BEAM EXTENDS PAST FOOTING.
2. SEE 19/- FOR CONDITION WHERE FOOTING EXTENDS PAST FLOOR BEAM.
3. WHEN ALTERNATE DIRECT WELD OPTION IS USED, IT MUST BE USED FOR THE ENTIRE BUILDING. COMBINATION OF TYPICAL SIDE PLATES & DIRECT WELDING IS NOT PERMITTED.

ALTERNATE DIRECT WELD CONNECTION 17

SCALE: 1-1/2" = 1'-0"

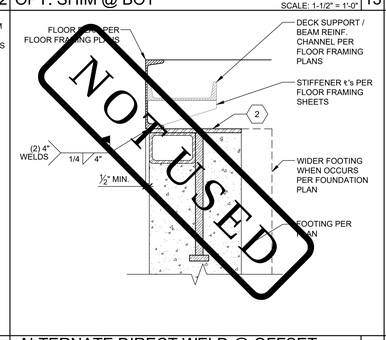

ALTERNATE DIRECT WELD @ OFFSET 18

SCALE: 1-1/2" = 1'-0"

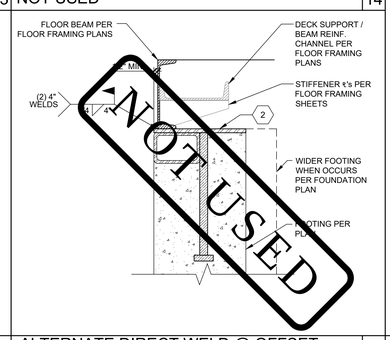

ALTERNATE DIRECT WELD @ OFFSET 19

SCALE: 1-1/2" = 1'-0"

IDENTIFICATION STAMP
DIV. OF THE STATE ARCHITECT
APP: 03-124589 INC:
REVIEWED FOR
SS ☑ FLS ☑ ACS ☑
DATE: 04/15/2025

AMS®
American Modular Systems
787 Spreckels Ave., Manteca, CA 95336
Phone (209) 825-1921 Fax (209) 825-7018
www.americanmodular.com

INTELLECTUAL-PROPERTY & PROPRIETARY RIGHTS STATEMENT
COPYRIGHT © AMERICAN MODULAR SYSTEMS (AMS)
AMS OWNS ALL COPYRIGHT AND OTHER INTELLECTUAL-PROPERTY AND PROPRIETARY RIGHTS IN THESE DRAWINGS, SPECIFICATIONS, AND THE MATERIAL CONTAINED HEREIN. ALL RIGHTS ARE RESERVED. ALL INTELLECTUAL-PROPERTY AND PROPRIETARY RIGHTS IN AND TO AMS, ALL PATENTABLE MATERIALS CONTAINED IN THESE DOCUMENTS AND ORIGINATING WITH AMS WILL REMAIN THE SOLE PROPERTY OF AMS. THESE DRAWING, SPECIFICATIONS, AND THE MATERIAL CONTAINED HEREIN MAY NOT BE REPRODUCED, TRANSMITTED, COPIED, DISTRIBUTED, MODIFIED, OR OTHERWISE DISPOSED OF (DIRECTLY OR INDIRECTLY) AND MAY NOT BE USED (IN WHOLE OR IN PART) TO ASSIST IN THE CONSTRUCTION, DESIGN, OR OTHER MAKING OF, OR FOR THE PURPOSE OF FURNISHING ANY INFORMATION FOR THE CONSTRUCTION, DESIGN, OR OTHER MAKING OF, ANY BUILDINGS (MODULAR OR OTHERWISE), DRAWINGS, SPECIFICATIONS, PRINTS, APPARATUS, OR PARTS THEREOF, EXCEPT AS EXPRESSLY PERMITTED BY WRITTEN CONSENT OF, OR IN A WRITTEN AGREEMENT WITH, AMS. SUBMITTAL OR DISTRIBUTION TO MEET OFFICIAL REGULATORY REQUIREMENTS WILL NOT BE CONSTRUED AS PUBLICATION IN DEROGATION OF AMS'S COPYRIGHT OR OTHER INTELLECTUAL-PROPERTY OR PROPRIETARY RIGHTS.

PRE-CHECKED SET NAME

24' x 40' THRU 120' x 40'
STANDARD MODULAR BUILDING
(HIGH SEISMIC)

FORM®

SITE SPECIFIC PROJECT NAME

VENTURA COLLEGE
(1) 72'x40' BUILDING

APPROVED
DIV. OF THE STATE ARCHITECT
APP: 04-122051 PC
REVIEWED FOR
SS ☑ PLS ☑ ACS ☑ CG ☑
DATE: 04/03/2024

☒ 2022 CBC PRE-CHECK (PC) DOCUMENT
A SEPARATE PROJECT APPLICATION FOR CONSTRUCTION IS REQUIRED

MANUFACTURER PROFESSIONAL OF RECORD ON PC

LICENSED ARCHITECT PATRICK ★ No. C12631 Ren. 3-31-25 STATE OF CALIFORNIA

REGISTERED PROFESSIONAL ENGINEER Mark D. Fischer No. S3380 STRUCTURAL STATE OF CALIFORNIA RST#22414

03/13/2024
THESE DRAWINGS ARE PRELIMINARY AND NOT FOR CONSTRUCTION UNLESS STAMPED & SIGNED BY THE DESIGN PROFESSIONAL OF RECORD.

REVISIONS
1
2
3
4

DRAWN BY:	AA
SCALE:	AS NOTED
DATE:	MM/DD/YY
PROJECT NO:	XXXX-22

SHEET TITLE:

UPGRADED ANCHORAGE FOUNDATION DETAILS

SHEET NUMBER:

S1.6B

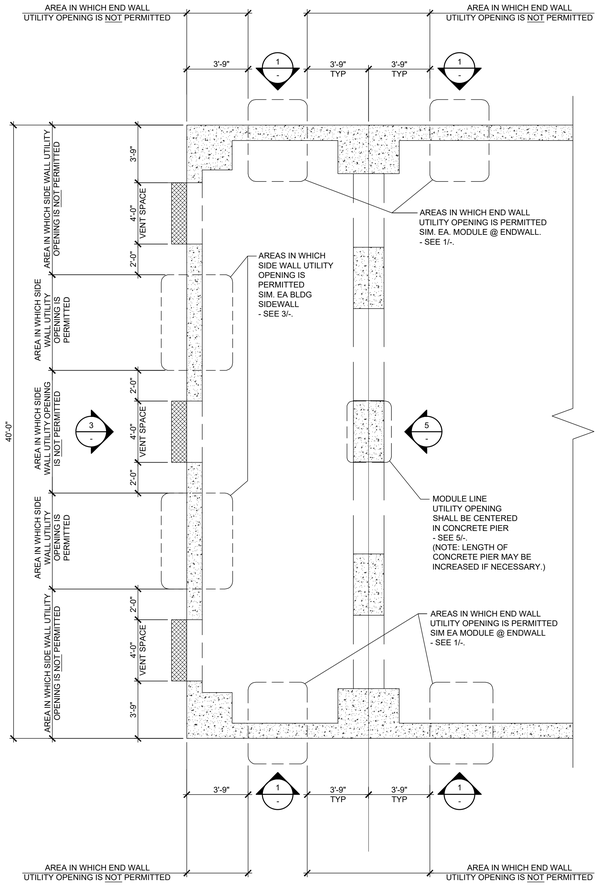

OPTIONAL UTILITY OPENINGS PLAN — SCALE: 1/4"=1'-0" — A

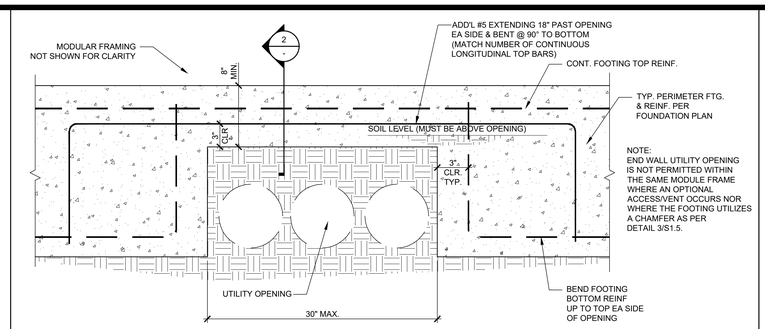

OPTIONAL UTILITY OPENINGS IN END WALL FOOTINGS — N.T.S. — 1

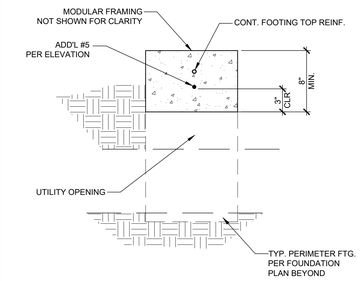

DETAIL — N.T.S. — 2

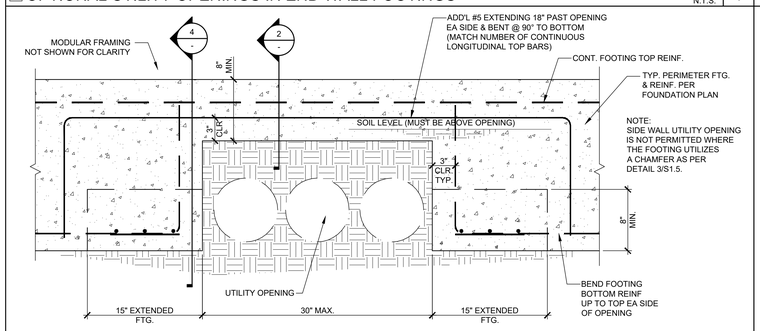

OPTIONAL UTILITY OPENINGS IN SIDE WALL FOOTINGS — N.T.S. — 3

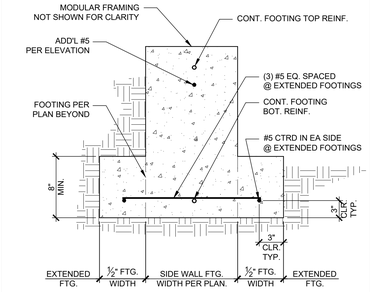

DETAIL — N.T.S. — 4

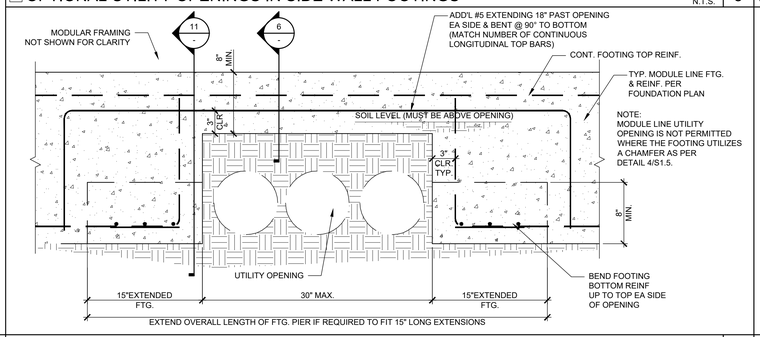

OPTIONAL UTILITY OPENINGS IN MODULE LINE FOOTINGS — N.T.S. — 5

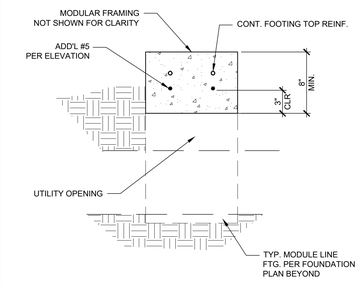

DETAIL — N.T.S. — 6

NOT USED — 7

NOT USED — 8

NOT USED — 9

NOT USED — 10

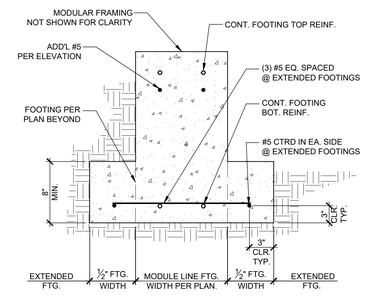

DETAIL — N.T.S. — 11

IDENTIFICATION STAMP
DIV. OF THE STATE ARCHITECT
APP: 03-124589 INC:
REVIEWED FOR
SS ☑ FLS ☑ ACS ☑
DATE: 04/15/2025

AMS®
American Modular Systems
787 Spreckels Ave., Manteca, CA 95336
Phone (209) 825-1921 Fax (209) 825-7018
www.americanmodular.com

INTELLECTUAL-PROPERTY & PROPRIETARY RIGHTS STATEMENT
COPYRIGHT © AMERICAN MODULAR SYSTEMS (AMS)
AMS OWNS ALL COPYRIGHT AND OTHER INTELLECTUAL-PROPERTY AND PROPRIETARY RIGHTS IN THE DOCUMENTS AND DESIGNS PRESENTED HEREIN. CERTAIN ELEMENTS OF CERTAIN ELEMENTS SHOWN IN THESE DOCUMENTS ARE REGISTERED TRADEMARKS OF AMS. ALL PATENTABLE MATERIALS CONTAINED IN THESE DOCUMENTS AND ORIGINATING WITH AMS WILL REMAIN THE SOLE PROPERTY OF AMS. THESE DRAWING, SPECIFICATIONS AND THE MATERIAL CONTAINED HEREIN MAY NOT BE REPRODUCED, TRANSMITTED, COPIED, DISTRIBUTED, MODIFIED, OR OTHERWISE DISPOSED OF (DIRECTLY OR INDIRECTLY) AND MAY NOT BE USED (IN WHOLE OR IN PART) TO ASSIST IN THE CONSTRUCTION, DESIGN, OR OTHER MAKING OF, OR FOR THE PURPOSE OF FURNISHING ANY INFORMATION FOR THE CONSTRUCTION, DESIGN, OR OTHER MAKING OF, ANY BUILDINGS (MODULAR OR OTHERWISE), DRAWINGS, SPECIFICATIONS, PRINTS, APPARATUS, OR PARTS THEREOF, EXCEPT AS EXPRESSLY PERMITTED BY WRITTEN CONSENT OF, OR IN A WRITTEN AGREEMENT WITH, AMS. SUBMITTAL OR DISTRIBUTION TO MEET OFFICIAL REGULATORY REQUIREMENTS WILL NOT BE CONSTRUED AS PUBLICATION IN DEROGATION OF AMS'S COPYRIGHT OR OTHER INTELLECTUAL-PROPERTY OR PROPRIETARY RIGHTS.

PRE-CHECKED SET NAME

24' x 40' THRU 120' x 40'
STANDARD MODULAR BUILDING
(HIGH SEISMIC)

FORM®

SITE SPECIFIC PROJECT NAME

VENTURA COLLEGE
(1) 72'x40' BUILDING

APPROVED
DIV. OF THE STATE ARCHITECT
APP: 04-122051 PC
REVIEWED FOR
SS ☑ FLS ☑ ACS ☑ CG ☑
DATE: 04/03/2024

☒ 2022 CBC PRE-CHECK (PC) DOCUMENT
A SEPARATE PRELIMINARY APPLICATION & CONSTRUCTION FILE IS REQUIRED

MANUFACTURER PROFESSIONAL OF RECORD ON PC

LICENSED ARCHITECT — PATRICK KEY — No. C12631 — Ren. 3-31-25 — STATE OF CALIFORNIA

REGISTERED PROFESSIONAL ENGINEER — MARIA D. FOCHER — No. S3380 — STRUCTURAL — STATE OF CALIFORNIA — RST#2214

03/13/2024

THESE DRAWINGS ARE PRELIMINARY AND NOT FOR CONSTRUCTION UNLESS STAMPED & SIGNED BY THE DESIGN PROFESSIONAL OF RECORD.

REVISIONS
1
2
3
4

DRAWN BY:	AA
SCALE:	AS NOTED
DATE:	MM/DD/YY
PROJECT NO:	XXXX-22

SHEET TITLE:

CONCRETE FOUNDATION
OPTIONAL UTILITY
OPENINGS IN FOOTINGS

SHEET NUMBER:

S1.7

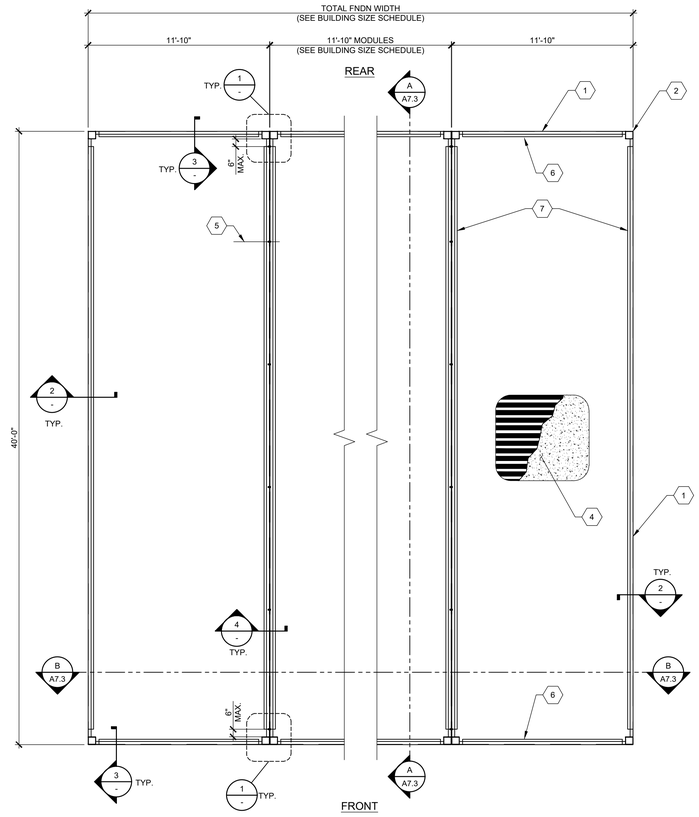

FLOOR FRAMING PLAN (CONCRETE FLOOR w/ 3WH-DECK OR 3WxH DECK OPTION) 150 PSF MAX FLOOR LIVE LOAD

SCALE : 1/4"=1'-0" A

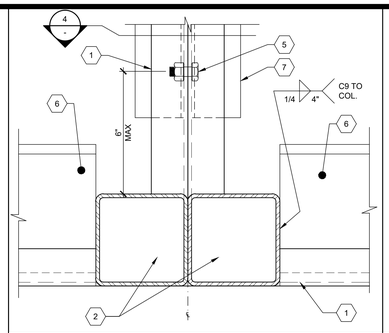

TYP. FLOOR BEAMS CONNECTION

SCALE : 3" = 1'-0" 1

1. FLOOR BEAM PER SHEET S5.0. USE SINGLE SIZE CHANNEL THROUGHOUT FLOOR SYSTEM.
2. HSS COLUMN PER SHEET S5.0.
3. NOT USED
4. 2" MIN. LIGHTWEIGHT CONC. FILL w/ 6x6/W1.4xW1.4 WWF w/ 1'-0" LAP OVER ASC 18 GA. 3WxH GALVANIZED DECK (5" MAX TOTAL THICKNESS) SEE 5/- FOR DECK PROPERTIES AND ATTACHMENT PATTERN.
5. $^{5}/_{8}$"Ø MB @ 10'-0" O.C. MAX. 6" MAX FROM INSIDE FACE OF COLUMNS PER DETAILS 1 & 4/-.
   BOLT HOLE THRU FLOOR CHANNELS = BOLT Ø + $^{1}/_{16}$".
6. C9x13.4" DECK SUPPORT CHANNEL PER DETAIL 3/-.
   C9 MAY HAVE 3"Ø MAX HOLES THRU WEB WITHOUT WEB REINFORCEMENT PER THE FOLLOWING:
   1. HOLES MUST BE CENTERED ON WEB.
   2. MULTIPLE HOLES MUST BE SPACED A MIN. OF 24" APART.
   3. HOLES MUST BE 24" MIN. FROM INSIDE FACE OF COLUMNS.
7. ∠4"x3"x$^{1}/_{4}$" LLH (MIN.) DECK SUPPORT ANGLE PER DETAIL 2 & 4/-

KEY NOTES

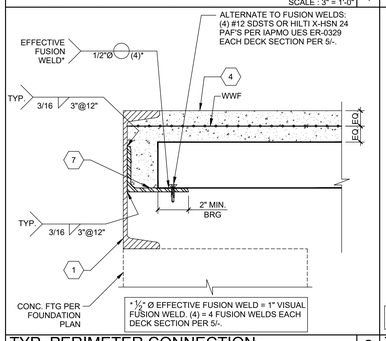

TYP. PERIMETER CONNECTION
(@ LONGITUDINAL FLOOR BEAMS)

SCALE : 3" = 1'-0" 2

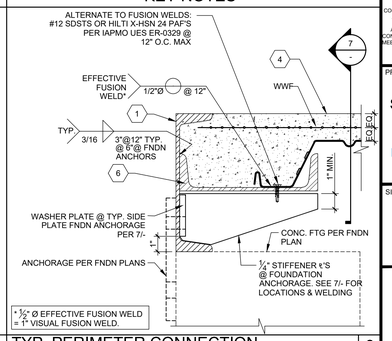

TYP. PERIMETER CONNECTION
(@ TRANSVERSE FLOOR BEAMS)

SCALE : 3" = 1'-0" 3

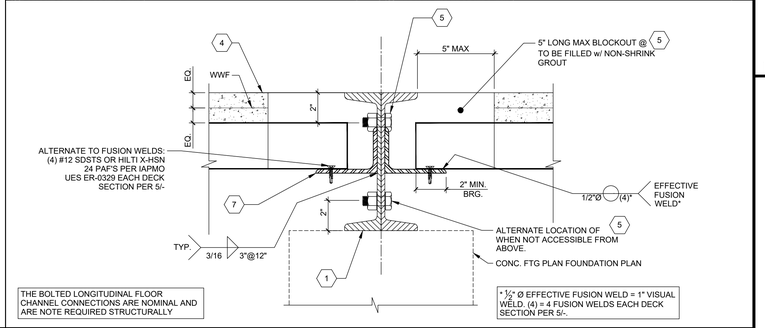

TYP. MODULE LINE CONNECTION

SCALE : 3" = 1'-0" 4

BUILDING SIZE SCHEDULE			
BUILDING SIZE (FT)	TOTAL # OF 12'-0" WIDE MODULES	TOTAL # OF CENTER MODULES	OVERALL BUILDING WIDTH[1]
☐ 24'x40'	2	0	23'-8½"
☐ 36'x40'	3	1	35'-6¾"
☐ 48'x40'	4	2	47'-5"
☐ 60'x40'	5	3	59'-3¼"
☒ 72'x40'	6	4	71'-1½"
☐ 84'x40'	7	5	82'-11¾"
☐ 96'x40'	8	6	94'-10"
☐ 108'x40'	9	7	106'-8¼"
☐ 120'x40'	10	8	118'-6½"

NOTES:

1. TOTAL BUILDING WIDTH INCLUDES ¼" PER MODULE CONSTRUCTION TOLERANCE PER FOUNDATION SHEETS ~~S1.0~~, S1.1, ~~S1.2, & S1.3~~

BUILDING SIZE SCHEDULE

MINIMUM PROPERTIES

PLAN DESIGNATION	DECK TYPE	S_{gbot} IN^3/FT	I_g IN^4/FT	AVAILABLE DIAPHRAGM SHEAR (LRFD)
	3"-18 GA ASC 3WxH GALV DECK (36" WIDE)	0.789	1.233	1565 PLF (LRFD) w/ 2" LWC TOPPING (5" TOTAL SLAB THICKNESS)

DECK PROFILE

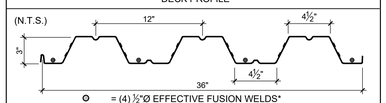

O = (4) ½"Ø EFFECTIVE FUSION WELDS*
ALTERNATE (4) #12 SDSTS
OR HILTI X-HSN 24 PAF'S.
(SEE 3/- FOR ATTACHMENT AT PARALLEL SUPPORTS)

* ½"Ø EFFECTIVE FUSION WELD = 1"Ø VISUAL FUSION WELD

SIDE LAP ATTACHMENT TO BE BOTTON PUNCHED @ 36" O.C.
NOTE: ASC STEEL DECKING: IAPMO UES ER #0329

3WxH MTL DECK PROPERTIES & PROFILE

N.T.S. 5

NOT USED 6

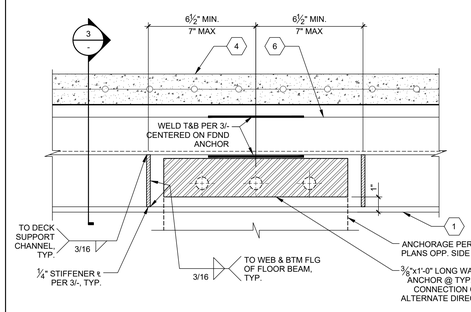

WASHER PLATE SCHEDULE		
CONCRETE SLAB THICKNESS	FLOOR BEAM	
	C9 (TYP.)	C10 (OPT.)
5"	2½"	3½"

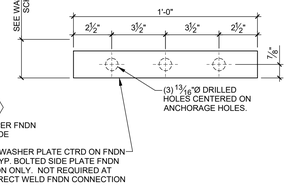

TYP. REINFORCED FRAMING @ FOUNDATION ANCHORAGE

SCALE : 3" = 1'-0" 7

IDENTIFICATION STAMP
DIV. OF THE STATE ARCHITECT
APP: 03-124589 INC:
REVIEWED FOR
SS ☑ FLS ☑ ACS ☑
DATE: 04/15/2025

AMS®
American Modular Systems
767 Spreckels Ave., Manteca, CA 95336
Phone (209) 825-1921 Fax (209) 825-7018
www.americanmodular.com

INTELLECTUAL-PROPERTY & PROPRIETARY RIGHTS STATEMENT
COPYRIGHT © AMERICAN MODULAR SYSTEMS (AMS)
AMS OWNS ALL COPYRIGHT AND OTHER INTELLECTUAL-PROPERTY AND PROPRIETARY RIGHTS IN THESE DOCUMENTS. UNLESS OTHERWISE NOTED, THE COPYRIGHT IN THE CERTAIN ELEMENTS SHOWN IN THESE DOCUMENTS ARE REGISTERED TRADEMARKS OF AMS. ALL PATENTABLE MATERIALS CONTAINED IN THESE DOCUMENTS AND ORIGINATING WITH AMS WILL REMAIN THE SOLE PROPERTY OF AMS. THESE DRAWING, SPECIFICATIONS, AND THE MATERIAL CONTAINED HEREIN MAY NOT BE REPRODUCED, TRANSMITTED, COPIED, DISTRIBUTED, MODIFIED, OR OTHERWISE DISPOSED OF (DIRECTLY OR INDIRECTLY) AND MAY NOT BE USED (IN WHOLE OR IN PART) TO ASSIST IN THE CONSTRUCTION, DESIGN, OR OTHER MAKING OF, OR FOR THE PURPOSE OF FURNISHING ANY INFORMATION FOR THE CONSTRUCTION, DESIGN, OR OTHER MAKING OF, ANY BUILDINGS (MODULAR OR OTHERWISE), DRAWINGS, SPECIFICATIONS, PRINTS, APPARATUS, OR PARTS THEREOF, EXCEPT AS EXPRESSLY PERMITTED BY WRITTEN CONSENT OF, OR IN A WRITTEN AGREEMENT WITH, AMS. SUBMITTAL OR DISTRIBUTION TO MEET OFFICIAL REGULATORY REQUIREMENTS WILL NOT BE CONSTRUED AS PUBLICATION IN DEROGATION OF AMS'S COPYRIGHT OR OTHER INTELLECTUAL-PROPERTY OR PROPRIETARY RIGHTS.

PRE-CHECKED SET NAME

24' x 40' THRU 120' x 40'
STANDARD MODULAR BUILDING
(HIGH SEISMIC)

FORM®

SITE SPECIFIC PROJECT NAME

VENTURA COLLEGE
(1) 72'x40' BUILDING

APPROVED
DIV. OF THE STATE ARCHITECT
APP: 04-122051 PC
REVIEWED FOR
SS ☑ FLS ☑ ACS ☑ CG ☑
DATE: 04/03/2024

☒ 2022 CBC PRE-CHECK (PC) DOCUMENT
A SEPARATE PRE-SITE APPLICATION & CONSTRUCTION IS REQUIRED

MANUFACTURER PROFESSIONAL OF RECORD ON PC

LICENSED ARCHITECT PATRICK CONNOR No. C12631 Ren. 3-31-25 STATE OF CALIFORNIA

REGISTERED PROFESSIONAL ENGINEER MARK D. FRANCH No. S3380 STRUCTURAL STATE OF CALIFORNIA

RST#22214

03/13/2024

THESE DRAWINGS ARE PRELIMINARY AND NOT FOR CONSTRUCTION UNLESS STAMPED & SIGNED BY THE DESIGN PROFESSIONAL OF RECORD.

REVISIONS

1
2
3
4

DRAWN BY:	AA
SCALE:	AS NOTED
DATE:	MM/DD/YY
PROJECT NO:	XXXX-22

SHEET TITLE:
FLOOR FRAMING PLAN & DETAILS FOR CONCRETE FLOOR w/ 3WH-DECK OR 3WxH DECK OPTION (150 PSF MAX FLOOR L.L.)

SHEET NUMBER:

S3.3

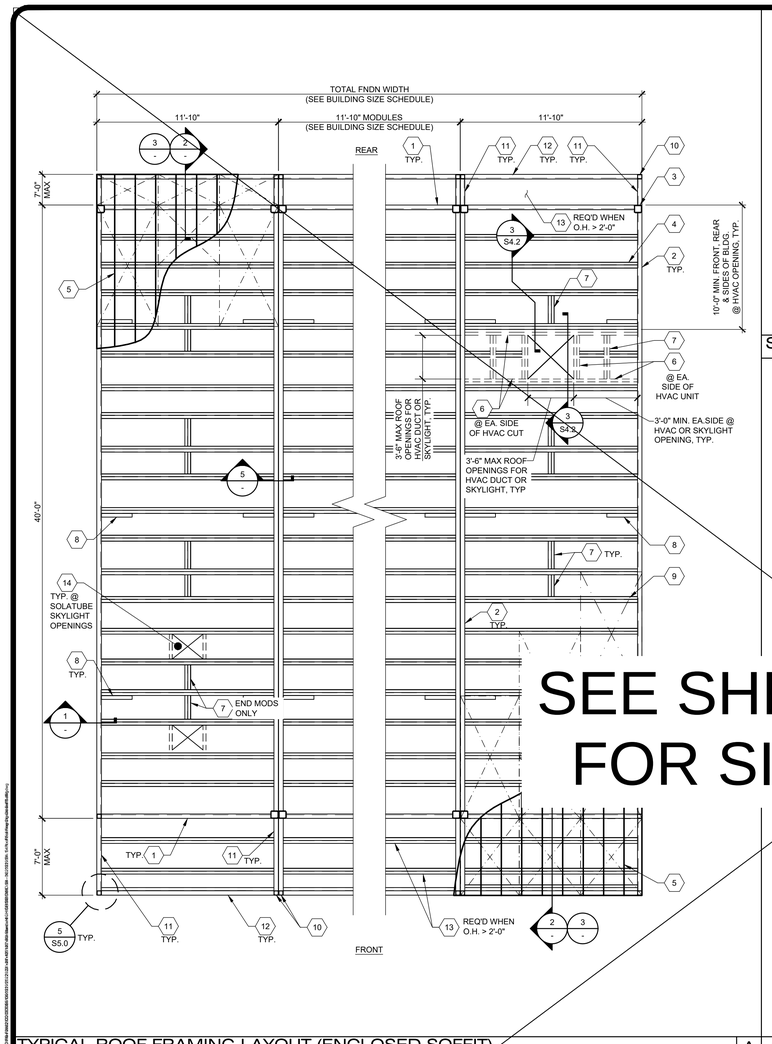

TYPICAL ROOF FRAMING LAYOUT (ENCLOSED SOFFIT) SCALE: 1/4"=1'-0" A

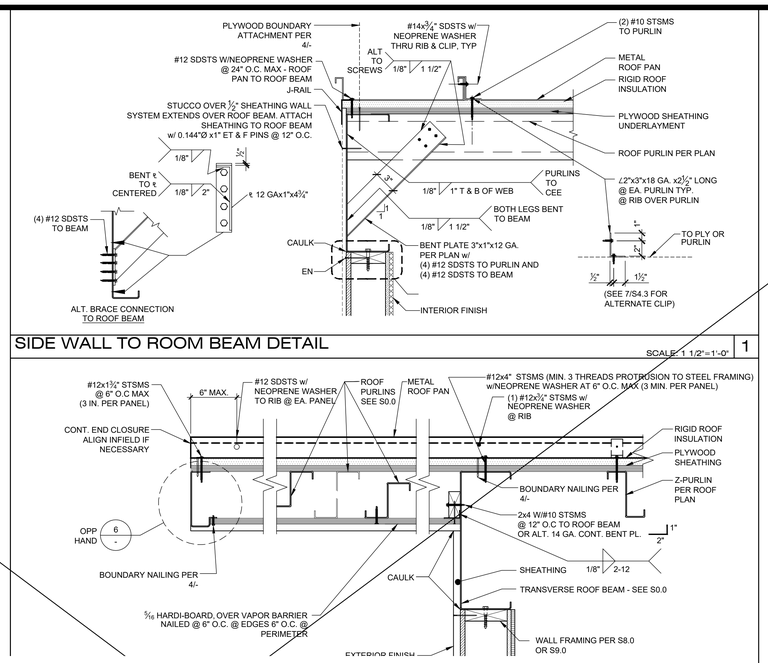

SIDE WALL TO ROOM BEAM DETAIL SCALE: 1 1/2"=1'-0" 1

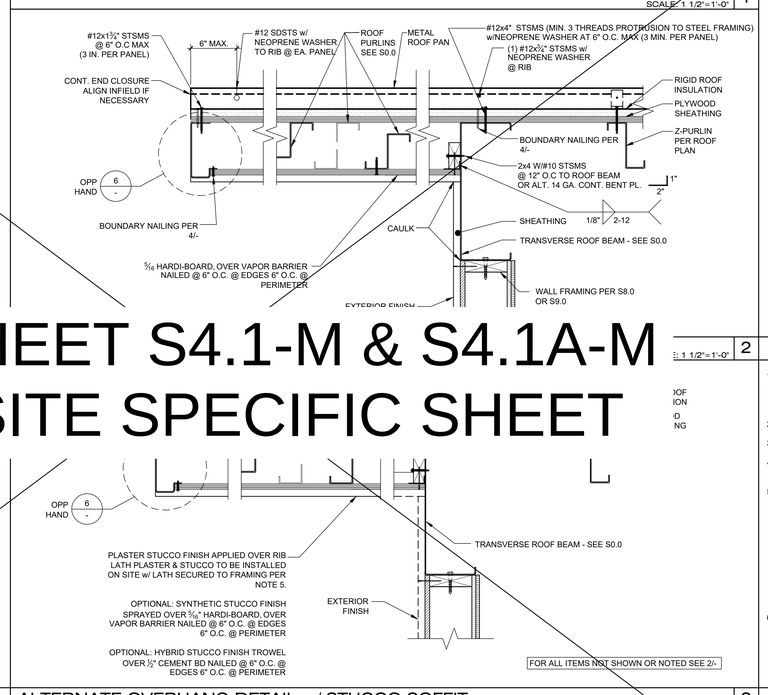

ALTERNATE OVERHANG DETAIL w/ STUCCO SOFFIT SCALE: 1 1/2"=1'-0" 3

1. TRANSVERSE ROOF BEAM PER SHEET S0.0.
2. LONGITUDINAL ROOF BEAM PER SHEET S0.0.
3. HSS COLUMN PER SHEET S5.0.
4. ROOF PURLINS @ 24" O.C. MAX.
   -SEE SHEET S0.0
   (USE 'C' PURLINS @ OPT. SOLUTUBE SKYLIGHT OPENINGS PER 14 BELOW)
5. 20 GA. OR 22 GA. METAL ROOF PAN - SEE SHEET S0.0.
6. PROVIDE DOUBLE PURLINS AND BLOCKING PER 2-4/S4.2 @ OPTIONAL HVAC UNIT (80% MAX). (1) HVAC UNIT PER MODULE MAX. LOCATE PER ROOF PLAN & PROVIDE 48" CLEAR MIN. BETWEEN ALL DUCT & SKYLIGHT OPENINGS. TYP. SEE 14 FOR SKYLIGHT OPENINGS.
   NOTE: DO NOT HEAD OFF MORE THAN ONE (1) ROOF PURLIN. MULTIPLE CONSECUTIVE ROOF PURLINS SHALL NOT BE INTERRUPTED UNO - SEE 2/S4.3.
7. MID SPAN PURLIN BLOCKING WELD TO ROOF PURLINS PER DETAIL 3/S4.3 BLOCKING IS ONLY REQUIRED AT END MODULES AT PURLINS WITH DIAGONAL BEAM BRACING AT EXTERIOR SIDE WALLS PER 8 BELOW.
8. 3x1x12 GA. BENT PLATE DIAGONAL BRACE TO ROOF BEAM PER DETAIL 1/- @ 8'-0" FROM HSS COLUMNS & @ MIDSPAN IF SINGLE PITCH.
   PROVIDE BRACES @ 8'-0" FROM HSS COLUMNS & (2) BRACES @ RIDGE IF DUAL PITCH.
   PROVIDE PURLIN BLOCKING @ EACH BRACE @ END MODULES ONLY PER 7 ABOVE.
9. 15/32" APA RATED PLYWOOD OR OSB ROOF SHEATHING, C-D EXPOSURE 1, 32/16 SPAN RATING. PLYWOOD SHALL BE 5 PLY CONFORMING TO PS 1-19 OR PS 2-19. OSB SHEATHING SHALL CONFORM TO PRP-108 OR PS 2-19. ALL PLYWOOD OR OSB SHALL BE EITHER T&G OR EDGE CLIPPED AT UNSUPPORTED EDGES. STAGGER SHEETS 48" O.C. AS SHOWN w/ FACE GRAIN PERPENDICULAR TO ROOF PURLINS, 2 SPANS MIN., 24" MIN. WIDTH. ALL BOUNDARY, EDGE & FIELD ATTACHMENTS SHALL BE 3/8" MIN. FROM EDGE OF OSB OR PLYWOOD & EDGE OF STEEL SUPPORTING MEMBER. REFER TO FASTENING SCHEDULE 4/- FOR FASTENING.
10. 2 1/2" SQ. HSS SOFFIT COLUMN - SEE 5/S5.0.
11. SOFFIT OUTRIGGER BEAM - SEE S0.0
12. SOFFIT BEAM - SEE S0.0
13. ROOF PURLINS @ 24" O.C. MAX IN OVERHANGS - SEE S0.0.
    MAY BE ACHIEVED WITH FULL DEPTH PURLINS SUPPORTING ROOF SHEATHING & SOFFIT SHEATHING OR BY SEPARATE SMALLER JOISTS @ EACH LEVEL MAINTAINING MAX SPACING AT EACH LEVEL
11. SOFFIT OUTRIGGER BEAM - SEE S0.0
12. SOFFIT BEAM - SEE S0.0

KEY NOTES 2

1. THE MATERIAL THICKNESS OF LIGHT GAUGE STRUCTURAL MEMBERS, IN THEIR END-USE, SHALL MEET OR EXCEED THE MINIMUM BASE METAL THICKNESS SPECIFIED ON SHEET S0.0. THE MATERIAL GAGE DESIGNATION IN THE PLAN SHALL BE USED AS REFERENCE ONLY.
2. SEE SHEET S8.0 & S9.0 FOR TYP. SIDE WALL FRAMING.
3. SEE SHEET S8.0 & S9.0 FOR TYP. END WALL FRAMING.
4. ALL FASTENERS THRU METAL ROOF PANEL SHALL BE INSTALLED w/ NEOPRENE WASHERS.
5. FOR PLASTER STUCCO FINISH @ SOFFIT, LATH SHALL BE SECURED PER THE FOLLOWING (CBC 2507.3):
   SECURE LATH TO ALTERNATE SUPPORTS WITH TIES CONSISTING OF A DOUBLE STRAND OF NO. 18 W & M GAGE GALVANIZED ANNEALED WIRE AT ONE EDGE OF EACH SHEET OF LATH. WIRE TIES SHALL BE INSTALLED NOT LESS THAN 3 INCHES (76MM) BACK FROM THE EDGE OF EACH SHEET AND SHALL BE LOOPED AROUND STRIPPING, OR ATTACHED TO A #8 SMS SCREW INTO EACH SIDE OF THE PURLIN - 2 INCHES (51MM) ABOVE THE BOTTOM OF THE PURLIN OR TO EACH END OF A #12 SMS DRIVEN HORIZONTALLY THROUGH THE PURLIN - 2 INCHES (51MM) ABOVE THE BOTTOM OF THE PURLIN AND THE ENDS OF THE WIRE SECURED TOGETHER WITH THREE TWISTS OF WIRE.
6. REFER TO MINIMUM INSULATION SCHEDULES ON SHEET M1.7 FOR ALL INSULATION REQUIREMENTS.

GENERAL NOTES

SEE SHEET S4.1-M & S4.1A-M FOR SITE SPECIFIC SHEET

BUILDING SIZE SCHEDULE			
BUILDING SIZE (FT)	TOTAL # OF 12'-0" WIDE MODULES	TOTAL # OF CENTER MODULES	OVERALL BUILDING WIDTH[1]
24'x40'	2	0	23'-8 1/2"
36'x40'	3	1	35'-6 3/4"
48'x40'	4	2	47'-5"
60'x40'	5	3	59'-3 1/4"
72'x40'	6	4	71'-1 1/2"
84'x40'	7	5	82'-11 3/4"
96'x40'	8	6	94'-10"
108'x40'	9	7	106'-8 1/4"
120'x40'	10	8	118'-6 1/2"

NOTES:

1. TOTAL BUILDING WIDTH INCLUDES 1/4" PER MODULAR CONSTRUCTION TOLERANCE PER FOUNDATION SHEETS S1.0, S1.1, S1.2, & S1.3.

BUILDING SIZE SCHEDULE

SHEATHING FASTENING SCHEDULE		
FASTENING	0.144"Ø ET&F PINS SPACING	#10 OR #12 SDSTS SPACING
BOUNDARY	6" O.C.	6" O.C.
EDGE	6" O.C.	6" O.C.
FIELD	12" O.C.	12" O.C.

NOTE: ET&F PINS PER IAPMO REPORT UES ER-0335. SDSTS PER ASTM C1513.

FASTENING SPACING SCHEDULE 4

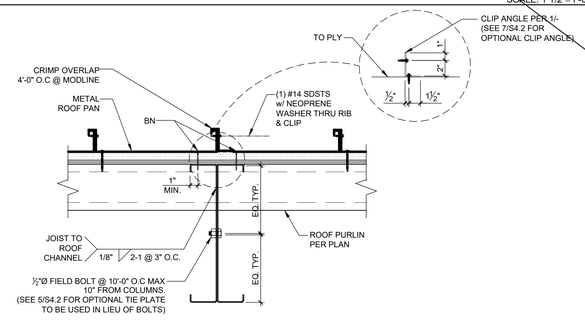

ROOF BEAM CONNECTION DETAIL SCALE: 1 1/2"=1'-0" 5

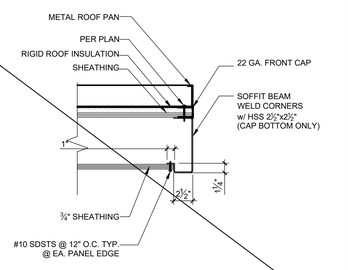

ENCLOSED SOFFIT DETAIL SCALE: 1 1/2"=1'-0" 6

IDENTIFICATION STAMP
DIV. OF THE STATE ARCHITECT
APP: 03-124589 INC:
REVIEWED FOR
SS ☑ FLS ☑ ACS ☑
DATE: 04/15/2025

AMS®
American Modular Systems
787 Spreckels Ave., Manteca, CA 95336
Phone (209) 825-1921 Fax (209) 825-7018
www.americanmodular.com

INTELLECTUAL-PROPERTY & PROPRIETARY RIGHTS STATEMENT
COPYRIGHT © AMERICAN MODULAR SYSTEMS (AMS)
AMS OWNS ALL COPYRIGHT AND OTHER INTELLECTUAL PROPERTY AND PROPRIETARY RIGHTS IN THE DESIGNS, DRAWINGS AND OTHER MATERIAL CONTAINED HEREIN. CERTAIN ELEMENTS SHOWN IN THESE DOCUMENTS ARE REGISTERED TRADEMARKS OF AMS. ALL PATENTABLE MATERIALS CONTAINED IN THESE DOCUMENTS AND ORIGINATING WITH AMS WILL REMAIN THE SOLE PROPERTY OF AMS. THESE DRAWING, SPECIFICATIONS AND THE MATERIAL CONTAINED HEREIN MAY NOT BE REPRODUCED, TRANSMITTED, COPIED, DISTRIBUTED, MODIFIED, OR OTHERWISE DISPOSED OF (DIRECTLY OR INDIRECTLY) AND MAY NOT BE USED (IN WHOLE OR IN PART) TO ASSIST IN THE CONSTRUCTION, DESIGN, OR OTHER MAKING OF, OR FOR THE PURPOSE OF FURNISHING ANY INFORMATION FOR THE CONSTRUCTION, DESIGN, OR OTHER MAKING OF, ANY BUILDINGS (MODULAR OR OTHERWISE), DRAWINGS, SPECIFICATIONS, PRINTS, APPARATUS, OR PARTS THEREOF, EXCEPT AS EXPRESSLY PERMITTED BY WRITTEN CONSENT OF, OR IN A WRITTEN AGREEMENT WITH, AMS. SUBMITTAL OR DISTRIBUTION TO MEET OFFICIAL REGULATORY REQUIREMENTS WILL NOT BE CONSTRUED AS PUBLICATION IN DEROGATION OF AMS'S COPYRIGHT OR OTHER INTELLECTUAL-PROPERTY OR PROPRIETARY RIGHTS.

PRE-CHECKED SET NAME
24' x 40' THRU 120' x 40'
STANDARD MODULAR BUILDING
(HIGH SEISMIC)
FORM®

SITE SPECIFIC PROJECT NAME

APPROVED
DIV. OF THE STATE ARCHITECT
APP: 04-122051 PC
REVIEWED FOR
SS ☑ FLS ☑ ACS ☑ CG ☑
DATE: 04/03/2024

☐ 2022 CBC PRE-CHECK (PC) DOCUMENT
A SEPARATE PRELIMINARY APPLICATION FOR CONSTRUCTION IS REQUIRED

MANUFACTURER PROFESSIONAL OF RECORD ON PC

LICENSED ARCHITECT PATRICK CRAWFORD No. C12631 Ren. 3-31-25 STATE OF CALIFORNIA

REGISTERED PROFESSIONAL ENGINEER MARK D. FISCH No. S3380 STRUCTURAL STATE OF CALIFORNIA RST#22214

03/13/2024

THESE DRAWINGS ARE PRELIMINARY AND NOT FOR CONSTRUCTION UNLESS STAMPED & SIGNED BY THE DESIGN PROFESSIONAL OF RECORD.

REVISIONS
1
2
3
4

DRAWN BY:	AA
SCALE:	AS NOTED
DATE:	MM/DD/YY
PROJECT NO:	XXXX-22

SHEET TITLE:
ROOF FRAMING PLAN
& DETAILS
ROOF SHEATHING OPTION

SHEET NUMBER:
S4.1

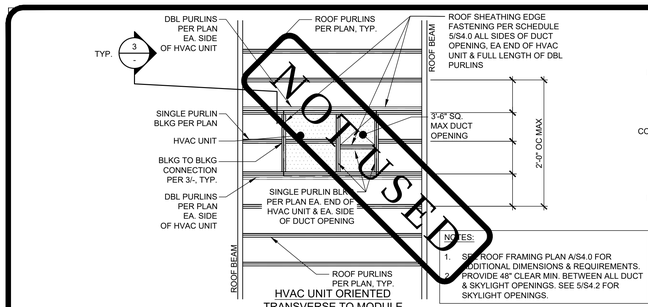

HVAC UNIT ORIENTED TRANSVERSE TO MODULE

(4'-0" MAX UNIT WIDTH. USE FRAMING FOR HVAC UNIT ORIENTED LONGITUDINAL TO MODULE FOR UNITS WIDER THAN 4'-0")

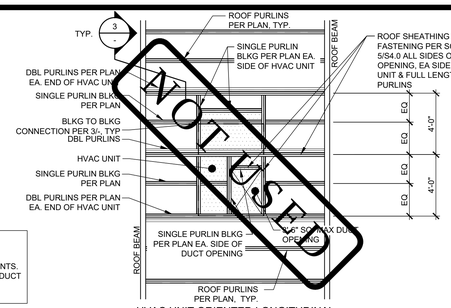

HVAC UNIT ORIENTED LONGITUDINAL TO MODULE

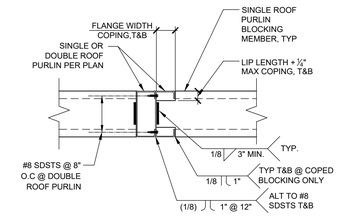

@ 'C' PURLINS

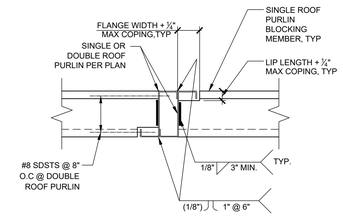

@ 'Z' PURLINS

*NOTE: SEE NOTE #1 OF GENERAL NOTES

ROOF FRAMING AT ROOFTOP HVAC UNITS

SCALE: 1 1/2"=1'-0" | 2

BLOCKING & DBL PURLIN CONNECTION DETAIL

SCALE: 1 1/2"=1'-0" | 3

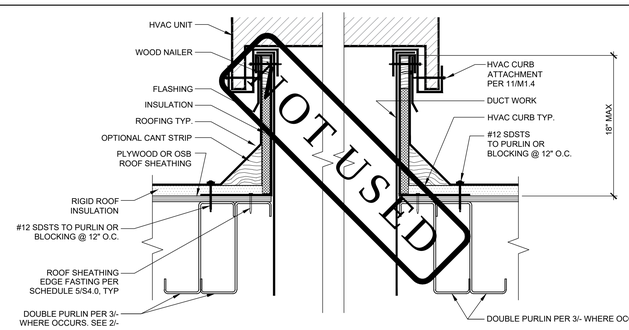

HVAC CURB DETAIL ANCHORAGE

SCALE: 1 1/2"=1'-0" | 4

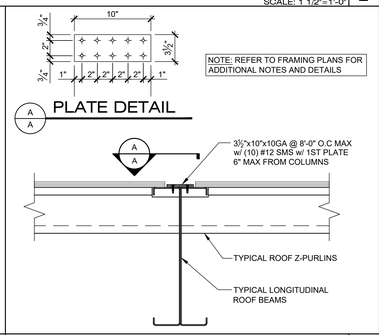

OPTIONAL ROOF TIE PLATE

SCALE: 1 1/2"=1'-0" | 5

NOT USED | 6

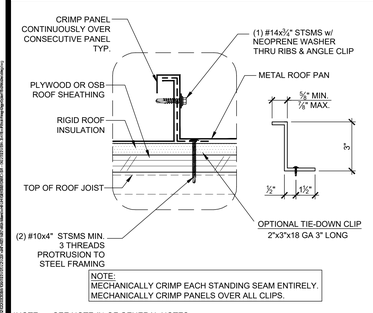

*NOTE: SEE NOTE #1 OF GENERAL NOTES

ROOF DETAIL

(OPTIONAL ROOF PAN CLIP)
SCALE: 1 1/2"=1'-0" | 7

NOT USED | 8

NOT USED | 9

NOT USED | 10

NOT USED | 11

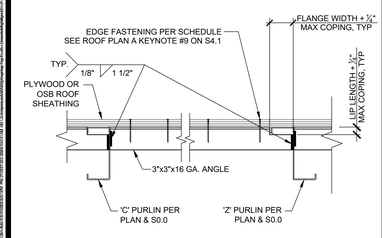

@ 'C' PURLINS @ 'Z' PURLINS

*NOTE: SEE NOTE #1 OF GENERAL NOTES

TYP. ANGLE TO Z-PURLIN ATTACHMENT

SCALE: 1 1/2"=1'-0" | 12

NOT USED | 13

NOT USED | 14

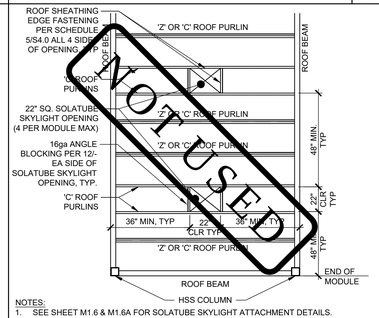

NOTES:
1. SEE SHEET M1.6 & M1.6A FOR SOLATUBE SKYLIGHT ATTACHMENT DETAILS.
2. PROVIDE 48" CLEAR MIN. BETWEEN ALL OPENINGS INCLUDING HVAC DUCT OPENINGS.

ROOF FRAMING AT SOLATUBE SKYLIGHT OPENINGS

SCALE: 1 1/2"=1'-0" | 15

GENERAL NOTES

1. THE MATERIAL THICKNESS OF LIGHT GAUGE STRUCTURAL MEMBERS, IN THEIR END-USE, SHALL MEET OR EXCEED THE MINIMUM BASE METAL THICKNESS SPECIFIED ON SHEET S0.0 THE MATERIAL GAGE DESIGNATION IN THE PLAN SHALL BE USED AS REFERENCE ONLY.
2. REFER TO MINIMUM INSULATION SCHEDULES ON SHEET M1.7 FOR ALL INSULATION REQUIREMENTS.

IDENTIFICATION STAMP
DIV. OF THE STATE ARCHITECT
APP: 03-124589 INC:
REVIEWED FOR
SS ☑ FLS ☑ ACS ☑
DATE: 04/15/2025

AMS®
American Modular Systems
787 Spreckels Ave., Manteca, CA 95336
Phone (209) 825-1921 Fax (209) 825-7018
www.americanmodular.com

INTELLECTUAL-PROPERTY & PROPRIETARY RIGHTS STATEMENT
COPYRIGHT © AMERICAN MODULAR SYSTEMS (AMS)
AMS OWNS ALL COPYRIGHT AND OTHER INTELLECTUAL PROPERTY AND PROPRIETARY RIGHTS IN THE DESIGN, DRAWINGS AND OTHER INFORMATION AND MATERIAL CONTAINED HEREIN. CERTAIN ELEMENTS SHOWN IN THESE DOCUMENTS ARE REGISTERED TRADEMARKS OF AMS. ALL PATENTABLE MATERIALS CONTAINED IN THESE DOCUMENTS AND ORIGINATING WITH AMS WILL REMAIN THE SOLE PROPERTY OF AMS. THESE DRAWINGS, SPECIFICATIONS AND THE MATERIAL CONTAINED HEREIN MAY NOT BE REPRODUCED, TRANSMITTED, COPIED, DISTRIBUTED, MODIFIED, OR OTHERWISE DISPOSED OF (DIRECTLY OR INDIRECTLY) AND MAY NOT BE USED (IN WHOLE OR IN PART) TO ASSIST IN THE CONSTRUCTION, DESIGN, OR OTHER MAKING OF, OR FOR THE PURPOSE OF FURNISHING ANY INFORMATION FOR THE CONSTRUCTION, DESIGN, OR OTHER MAKING OF, ANY BUILDINGS (MODULAR OR OTHERWISE), DRAWINGS, SPECIFICATIONS, PRINTS, APPARATUS, OR PARTS THEREOF, EXCEPT AS EXPRESSLY PERMITTED BY WRITTEN CONSENT OF, OR IN A WRITTEN AGREEMENT WITH, AMS. SUBMITTAL OR DISTRIBUTION TO MEET OFFICIAL REGULATORY REQUIREMENTS WILL NOT BE CONSTRUED AS PUBLICATION IN DEROGATION OF AMS'S COPYRIGHT OR OTHER INTELLECTUAL-PROPERTY OR PROPRIETARY RIGHTS.

PRE-CHECKED SET NAME

24' x 40' THRU 120' x 40'
STANDARD MODULAR BUILDING
(HIGH SEISMIC)

FORM®

SITE SPECIFIC PROJECT NAME

VENTURA COLLEGE
(1) 72'x40' BUILDING

APPROVED
DIV. OF THE STATE ARCHITECT
APP: 04-122051 PC
REVIEWED FOR
SS ☑ FLS ☑ ACS ☑ CG ☑
DATE: 04/03/2024

☒ 2022 CBC PRE-CHECK (PC) DOCUMENT
A SEPARATE PRE-CHECK APPLICATION FOR CONSTRUCTION IS REQUIRED

MANUFACTURER PROFESSIONAL OF RECORD ON PC

LICENSED ARCHITECT — PATRICK CHANG — No. C12631 — Ren. 3-31-25 — STATE OF CALIFORNIA

REGISTERED PROFESSIONAL ENGINEER — MARIA D. FRANCO — No. S3380 — STRUCTURAL — STATE OF CALIFORNIA — RST#2214

03/13/2024

THESE DRAWINGS ARE PRELIMINARY AND NOT FOR CONSTRUCTION UNLESS STAMPED & SIGNED BY THE DESIGN PROFESSIONAL OF RECORD.

REVISIONS
1
2
3
4

DRAWN BY:	AA
SCALE:	AS NOTED
DATE:	MM/DD/YY
PROJECT NO:	XXXX-22

SHEET TITLE:

ROOF FRAMING DETAILS
ROOF SHEATHING OPTION

SHEET NUMBER:

S4.3

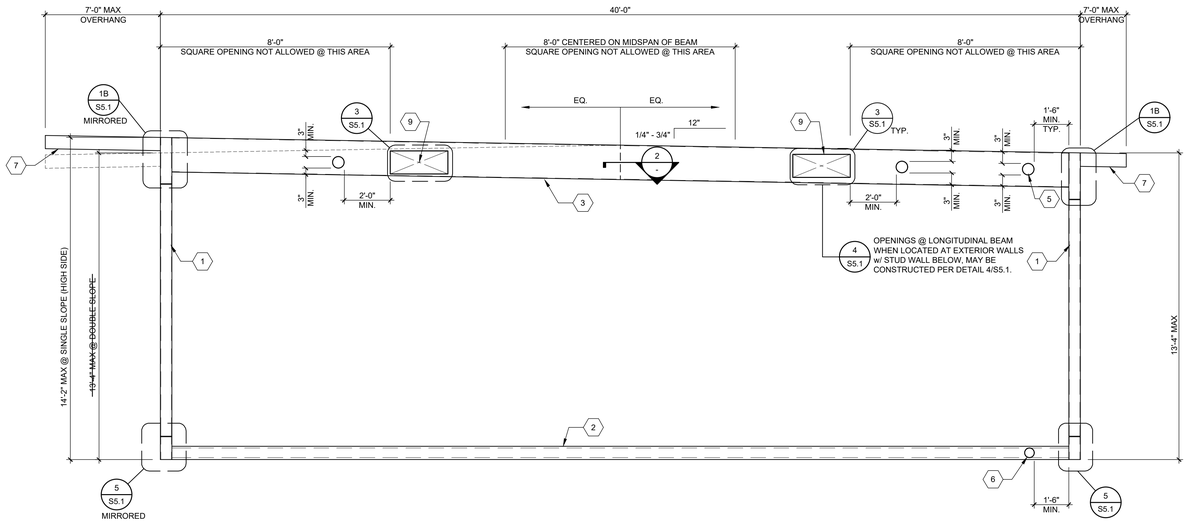

TYPICAL LONGITUDINAL FRAME ELEVATION

SCALE: 3/8"=1'-0" | 1

1. HSS COLUMN - SEE SCHEDULE 3 & BELOW
2. FLOOR BEAM - SEE SCHEDULE 3 & BELOW
3. LONGITUDINAL ROOF BEAM PER 18/S0.0 - GAUGE PER SCHEDULE 3 BELOW.
4. TRANSVERSE ROOF BEAM PER 18/S0.0 - GAUGE PER 3 BELOW.
5. 6"Ø MAX OPENING IN WEB OF FLOOR BEAM WITHOUT WEB REINFORCEMENT MINIMUM SPACING OF HOLES @ 48" O.C., HOLES MAY OCCUR @ ANY LOCATION ALONG LENGTH OF ROOF BEAM EXCEPT AS NOTED OTHERWISE ON FRAMING ELEVATION. - SEE 6/S5.1

   NOTE: IF HOLE IS 3" OR LESS, THEY MAY BE SPACED @ 24" O.C. MINIMUM
6. 4"Ø MAX OPENING IN WEB OF FLOOR BEAM WITHOUT WEB REINFORCEMENT MINIMUM SPACING OF HOLES @ 48" O.C. HOLES MAY OCCUR @ ANY LOCATION ALONG LENGTH OF FLOOR BEAM EXCEPT AS NOTED OTHERWISE ON FRAMING ELEVATION - SEE 6/S5.1.

   NOTE: IF HOLE IS 2" OR LESS, THEY MAY BE SPACED @ 24" O.C. MINIMUM.
7. SOFFIT OUTRIGGER BEAM AT ENCLOSED OVERHANG - REFER TO DETAIL 1A OR 1B/S5.1 & S0.0 FOR PROPERTIES.
8. SOFFIT BEAM AT ENCLOSED OVERHANG - REFER TO DETAIL 1A/S5.1 & S0.0 FOR PROPERTIES
9. LONGITUDINAL BEAM OPENING:
   REFER TO DETAIL 3/S5.1 FOR OPENING REINFORCEMENT (10"x30" MAX OPENING SIZE)
10. TRANSVERSE BEAM OPENING:
    REFER TO DETAIL 4/S5.1 FOR OPENING REINFORCEMENT (10"x30" MAX OPENING SIZE)

KEY NOTES

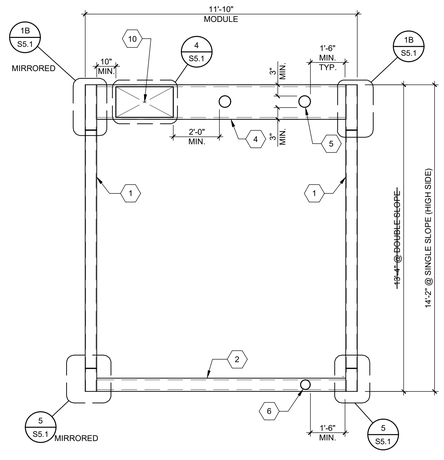

TYPICAL TRANSVERSE FRAME ELEVATION

SCALE : 3/8"=1'-0" | 4

THE WELDING PROCEDURE QUALIFICATION TEST RECORD AND WELDING PROCEDURE SPECIFICATION FOR THIS WELD SHALL BE PREPARED IN ACCORDANCE WITH AWS D1.1-15, D1.3-08 & D1.8-16 AND SUBMITTED TO THE STRUCTURAL ENGINEER FOR REVIEW AND SUBMITTAL TO THE D.S.A. TYPICAL ALL DETAILS THIS SHEET. ALL WELDS USED IN PRIMARY MEMBERS AND CONNECTIONS IN THE LATERAL FORCE-RESISTING SYSTEMS SHALL BE MADE WITH FILLER METAL THAT HAS A MINIMUM CHARPY V-NOTCHTOUGHNESS OF 20 FT.-LBS AT ZERO DEGREES F, AS DETERMINED BY AWS CLASSIFICATION.

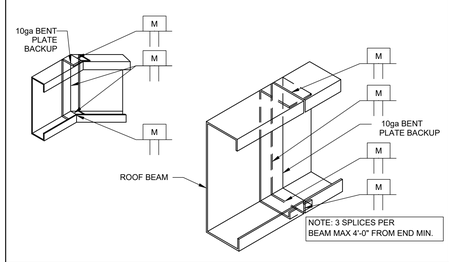

TYPICAL BEAM SLICE

SCALE: 1 1/2"=1'-0" | 2

FLOOR BEAMS		ALT. FLOOR BEAMS		COLUMNS	LONGITUDINAL ROOF BEAM	TRANSVERSE ROOF BEAM
PLYWOOD FLOOR	CONCRETE FLOOR	PLYWOOD FLOOR	CONCRETE FLOOR			
C9x20 (50 KSI)	C9x20 (50 KSI)	☐ C10x15.3	☐ C10x15.3	HSS 6x6x$\frac{5}{16}$ (ASTM A1085) Fy = 50ksi	10 GA.	10 GA.

NOTE: SEE ALL SECTION PROPERTIES ON SHEET S0.0

FRAME MEMBER SCHEDULE | 3

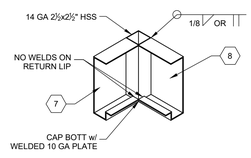

OVERHANG CORNER DETAIL

SCALE: 1 1/2"=1'-0" | 5

NOT USED | 6

IDENTIFICATION STAMP
DIV. OF THE STATE ARCHITECT
APP: 03-124589 INC:
REVIEWED FOR
SS ☑ FLS ☑ ACS ☑
DATE: 04/15/2025

AMS®
American Modular Systems
767 Spreckels Ave., Manteca, CA 95336
Phone (209) 825-1921 Fax (209) 825-7018
www.americanmodular.com

INTELLECTUAL-PROPERTY & PROPRIETARY RIGHTS STATEMENT
COPYRIGHT © AMERICAN MODULAR SYSTEMS (AMS)
AMS OWNS ALL COPYRIGHT AND OTHER INTELLECTUAL-PROPERTY AND PROPRIETARY RIGHTS IN THESE DOCUMENTS. ADDITIONALLY, MATERIALS CONTAINED HEREIN. CERTAIN ELEMENTS SHOWN IN THESE DOCUMENTS ARE REGISTERED TRADEMARKS OF AMS. ALL PATENTABLE MATERIALS CONTAINED IN THESE DOCUMENTS AND ORIGINATING WITH AMS WILL REMAIN THE SOLE PROPERTY OF AMS. THESE DRAWINGS, SPECIFICATIONS, AND THE MATERIAL CONTAINED HEREIN MAY NOT BE REPRODUCED, TRANSMITTED, COPIED, DISTRIBUTED, MODIFIED, OR OTHERWISE DISPOSED OF (DIRECTLY OR INDIRECTLY) AND MAY NOT BE USED (IN WHOLE OR IN PART) TO ASSIST IN THE CONSTRUCTION, DESIGN, OR OTHER MAKING OF, OR FOR THE PURPOSE OF FURNISHING ANY INFORMATION FOR THE CONSTRUCTION, DESIGN, OR OTHER MAKING OF, ANY BUILDINGS (MODULAR OR OTHERWISE), DRAWINGS, SPECIFICATIONS, PRINTS, APPARATUS, OR PARTS THEREOF, EXCEPT AS EXPRESSLY PERMITTED BY WRITTEN CONSENT OF, OR IN A WRITTEN AGREEMENT WITH, AMS. SUBMITTAL OR DISTRIBUTION TO MEET OFFICIAL REGULATORY REQUIREMENTS WILL NOT BE CONSTRUED AS PUBLICATION IN DEROGATION OF AMS'S COPYRIGHT OR OTHER INTELLECTUAL-PROPERTY OR PROPRIETARY RIGHTS.

PRE-CHECKED SET NAME

24' x 40' THRU 120' x 40'
STANDARD MODULAR BUILDING
(HIGH SEISMIC)

FORM®

SITE SPECIFIC PROJECT NAME

VENTURA COLLEGE
(1) 72'x40' BUILDING

APPROVED
DIV. OF THE STATE ARCHITECT
APP: 04-122051 PC
REVIEWED FOR
SS ☑ FLS ☑ ACS ☑ CG ☑
DATE: 04/03/2024

☒ 2022 CBC PRE-CHECK (PC) DOCUMENT
A SEPARATE PROJECT APPLICATION FOR CONSTRUCTION IS REQUIRED

MANUFACTURER PROFESSIONAL OF RECORD ON PC

LICENSED ARCHITECT PATRICK O'NEILL No. C12631 Ren. 3-31-25 STATE OF CALIFORNIA

REGISTERED PROFESSIONAL ENGINEER No. S3380 STRUCTURAL STATE OF CALIFORNIA

RST#22214

03/13/2024

THESE DRAWINGS ARE PRELIMINARY AND NOT FOR CONSTRUCTION UNLESS STAMPED & SIGNED BY THE DESIGN PROFESSIONAL OF RECORD.

REVISIONS

DRAWN BY:	AA
SCALE:	AS NOTED
DATE:	MM/DD/YY
PROJECT NO:	XXXX-22

SHEET TITLE:

MOMENT FRAME
ELEVATIONS & DETAILS

SHEET NUMBER:

S5.0

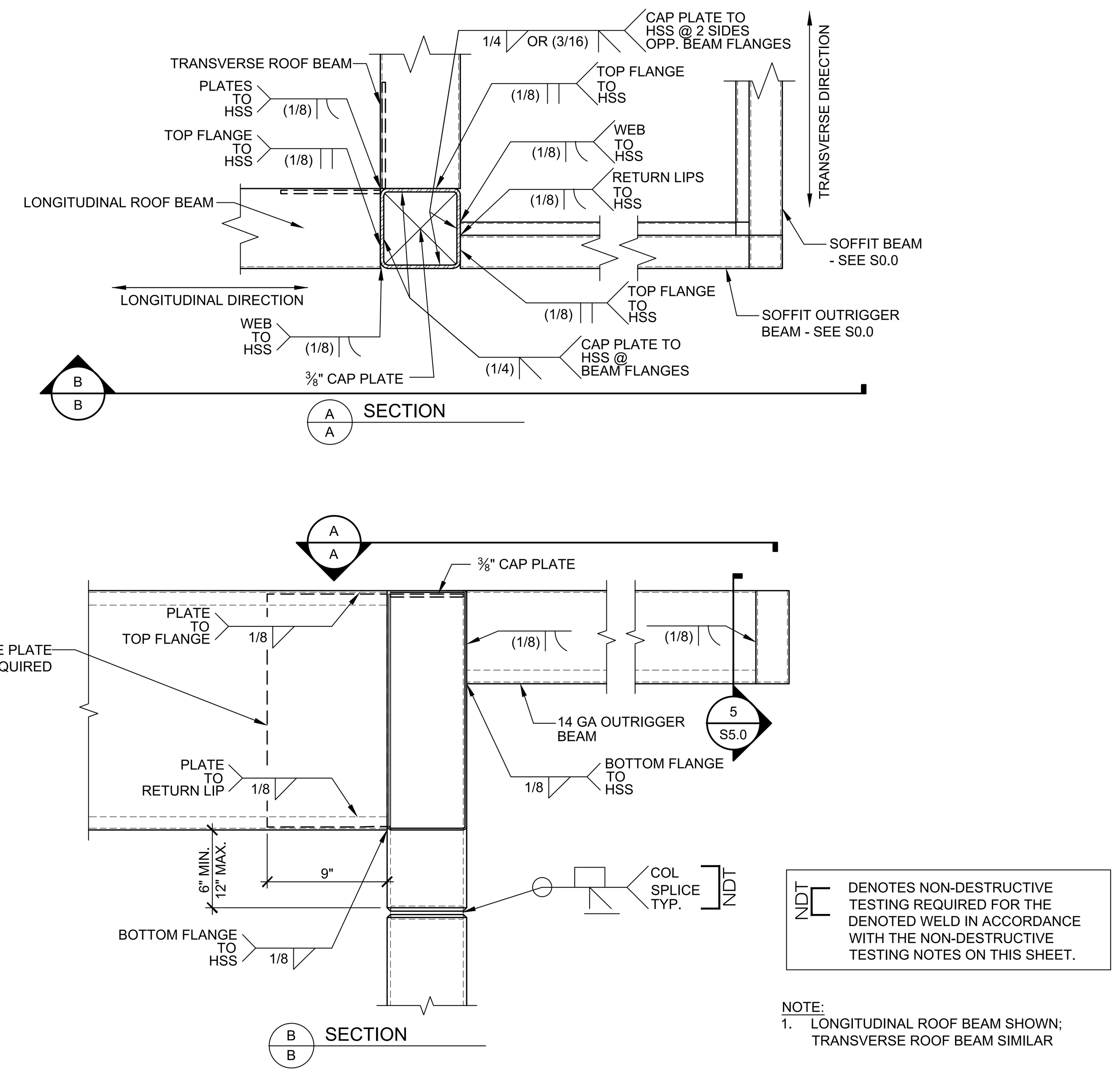

NDT DENOTES NON-DESTRUCTIVE TESTING REQUIRED FOR THE DENOTED WELD IN ACCORDANCE WITH THE NON-DESTRUCTIVE TESTING NOTES ON THIS SHEET.

NOTE:
1. LONGITUDINAL ROOF BEAM SHOWN; TRANSVERSE ROOF BEAM SIMILAR

TYPICAL ROOF BEAM TO HSS DETAIL — 1A

TYPICAL ROOF BEAM TO HSS DETAIL — 1B

SCALE: 1 1/2"=1'-0"

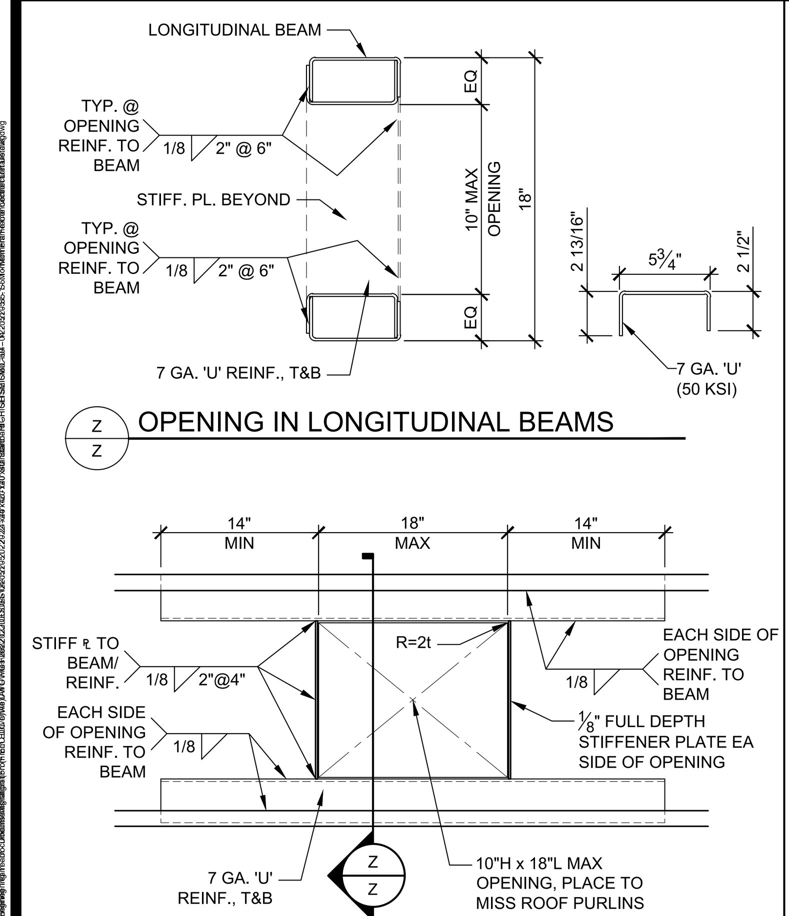

NOTES:

1. BEAM OPENING(S), LOCATED AT EXTERIOR WALLS w/ STUD WALL BELOW, MAY BE CONSTRUCTED PER DETAIL 4/S5.1.

OPENING @ ROOF BEAMS (LONGITUDINAL BEAMS) — 3

SCALE: 1 1/2"=1'-0"

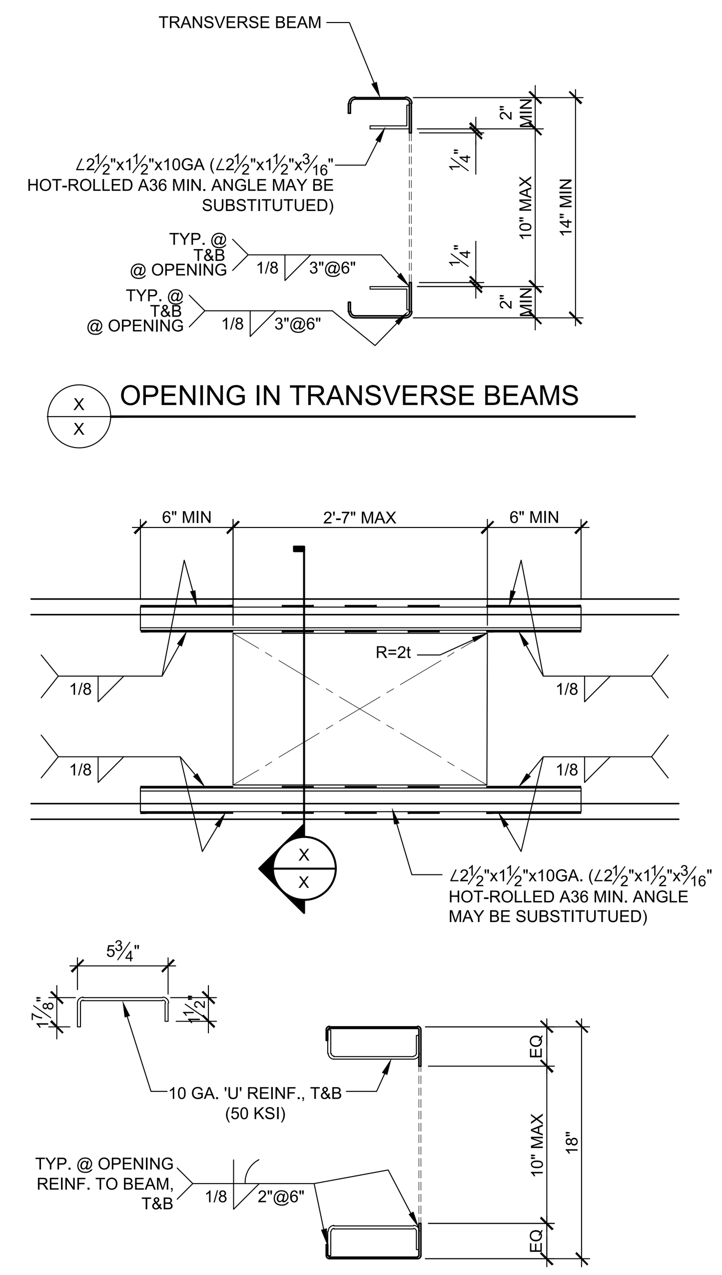

OPENING @ ROOF BEAMS (TRANSVERSE BEAMS) — 4

SCALE: 1 1/2"=1'-0"

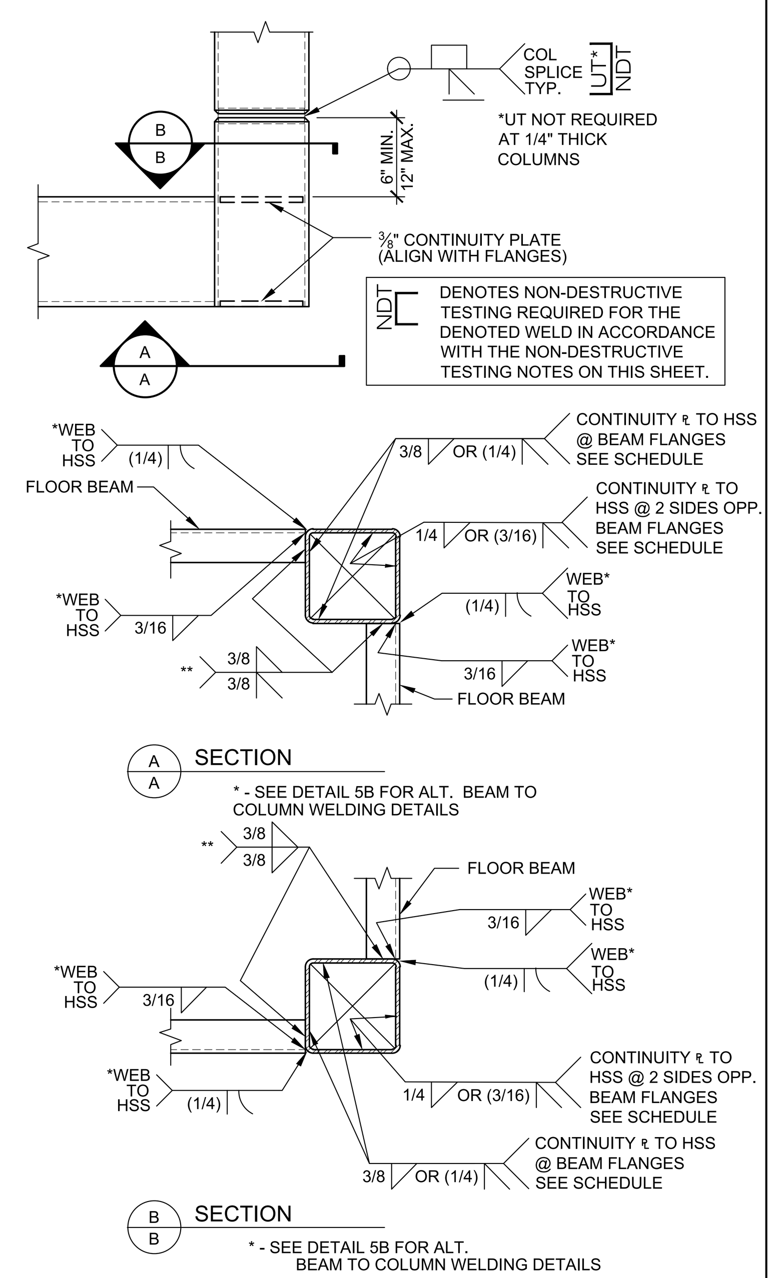

** FULL PEN WELD ALTERNATE - DETAIL 5B,MAY BE USED AS AN ALTERNATIVE TO THE DOUBLE SIDED FLANGE-TO-COLUMN WELDS SHOWN. NDT

TYP. CORNER TO FLOOR BM DETAIL — 5

SCALE: 1 1/2"=1'-0"

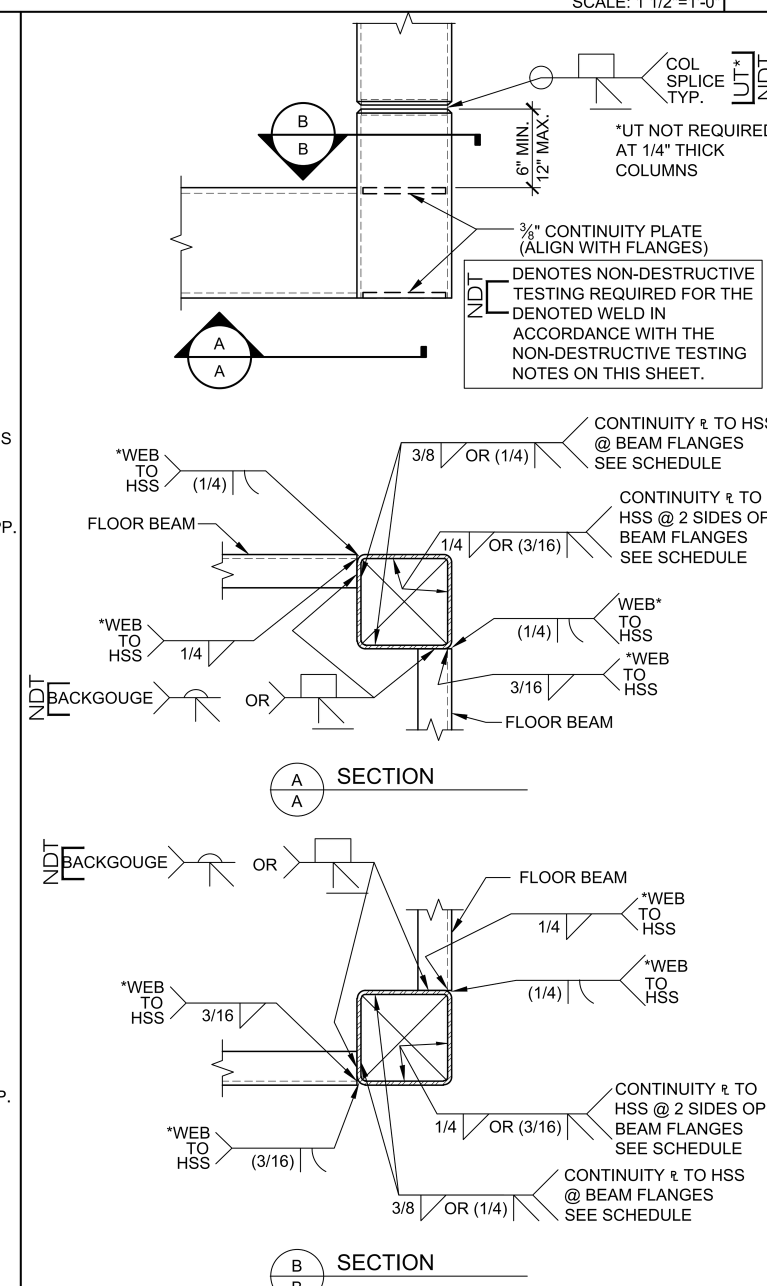

* FULL PEN WELD MAY BE USED AS AN ALTERNATIVE TO THE DOUBLE SIDED BEAM WEB-TO-COLUMN WELD SHOWN. NDT UT

ALTERNATE CORNER DETAIL — 5B

SCALE: 1 1/2"=1'-0"

THE WELDING PROCEDURE QUALIFICATION TEST RECORD AND WELDING PROCEDURE SPECIFICATION FOR WELDS ON THIS SHEET SHALL BE PREPARED IN ACCORDANCE WITH AWS D1.1-15 (HOT-ROLLED), D1.3-08 (COLD-FORMED) & D1.8-16 AND SUBMITTED TO THE STRUCTURAL ENGINEER FOR REVIEW AND SUBMITTAL TO D.S.A. UPON REQUEST. ALL WELDS USED IN PRIMARY MEMBERS AND CONNECTIONS IN THE LATERAL FORCE-RESISTING SYSTEMS SHALL BE MADE WITH FILLER METAL THAT HAS A MINIMUM CHARPY V-NOTCH TOUGHNESS OF 20 FT.-LBS AT ZERO DEGREES F, AS DETERMINED BY AWS CLASSIFICATION.

GENERAL NOTES

NON-DESTRUCTIVE TESTING OF COMPLETE JOINT PENETRATION (CJP) GROVE WELDS AT THE MOMENT-RESISTING BEAM-TO-COLUMN CONNECTIONS SHALL COMPLY WITH AISC 341-16 CHAPTER J PER CBC 1705A.2.1.

1. WELDS SUBJECT TO THE REQUIREMENTS OF NON-DESTRUCTIVE TESTING ARE NOTED ON THESE DRAWINGS WITH THE SYMBOL: NDT
2. ALL WELDS DESIGNATED FOR NON-DESTRUCTIVE TESTING REQUIRE MAGNETIC PARTICLE TESTING (MT) TO BE PERFORMED ON 25% OF THOSE WELDS.
3. ULTRASONIC TESTING (UT) IS TO BE PERFORMED ON 100% OF WELDS DENOTED WITH THE SYMBOL, NDT UT AND IS ONLY REQUIRED ON THOSE DESIGNATED WELDS.
4. ULTRASONIC TESTING (UT) IS ONLY REQUIRED WHERE THE THICKNESS OF THE WELDED MATERIAL IS 5/16" OR GREATER. UT IS NOT REQUIRED WHERE THE COLUMN THICKNESS IS LESS THAN 5/16". MAGNETIC PARTICLE TESTING (MT) IS STILL REQUIRED.
5. ULTRASONIC TESTING (UT) IS NOT REQUIRED ON WELDS FROM STRUCTURAL STEEL CHANNEL BEAM FLANGES TO COLUMNS AS UT TESTING IS NOT APPROPRIATE FOR SECTIONS WITH VARYING DEPTHS. MAGNETIC PARTICLE TESTING (MT) IS STILL REQUIRED.

NON-DESTRUCTIVE TESTING NOTES

1. FILLER METALS SHALL CONFORM TO THE REQUIREMENTS OF THE AISC SEISMIC PROVISIONS.
2. WELDING PROCEDURES SHALL BE IN ACCORDANCE WITH THE AISC SEISMIC PROVISIONS.
3. QUALITY CONTROL AND QUALITY ASSURANCE SHALL BE IN ACCORDANCE WITH THE AISC SEISMIC PROVISIONS.
4. WELD ACCESS HOLES SHALL BE IN ACCORDANCE WITH AISC 360-16, SECTION J1.6, AND SHALL BE CONSTRUCTED PER THE FOLLOWING DETAILS & NOTES.

WELD ACCESS HOLE GEOMETRY

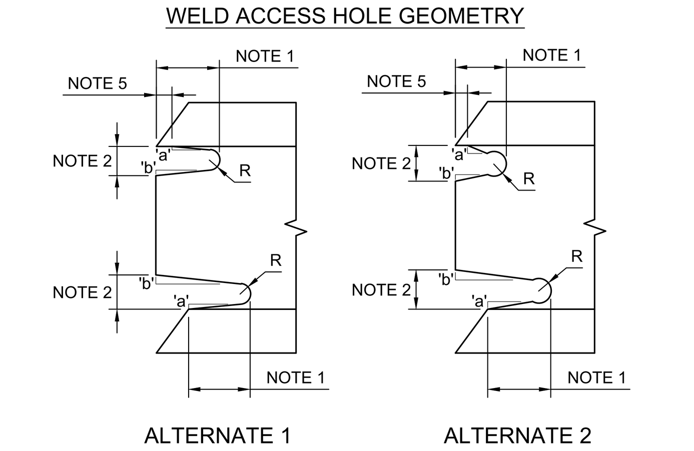

NOTES: THESE ARE TYPICAL DETAILS FOR JOINTS WELDED FROM ONE SIDE AGAINST STEEL BACKING WHERE WELD ACCESS HOLES ARE REQUIRED.

1) LENGTH: GREATER OF 1.5tw (WEB THICKNESS) OR 1-1/2 IN. (38 MM)
2) HEIGHT: GREATER OF 1.0tw OR 3/4 IN. (19 MM) BUT NEED NOT EXCEED 2 IN. (50 MM)
3) R: 3/8 IN. MIN. (10 MM). GRIND THE THERMALLY CUT SURFACES OF WELD ACCESS HOLES IN HEAVY SHAPES AS DEFINED IN SECTIONS A3.1(c) AND (d) OF AISC 360-16.
4) SLOPE 'a' FORMS A TRANSITION FROM THE WEB TO THE FLANGE. SLOPE 'b' MAY BE HORIZONTAL.
5) THE BOTTOM OF THE TOP FLANGE IS TO BE CONTOURED TO PERMIT THE TIGHT FIT OF BACKING BARS WHERE THEY ARE TO BE USED.

REQ. FOR FR. MOMENT CONNECTIONS

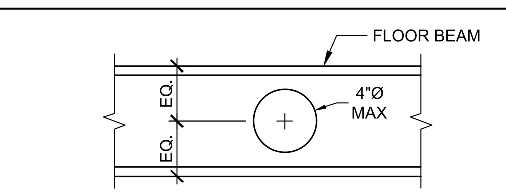

4" OPENING IN FLOOR BEAM

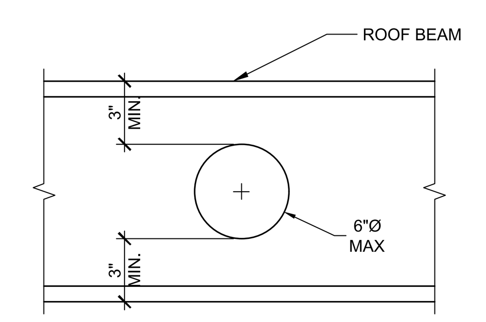

6" OPENING IN ROOF BEAM

OPENING IN BEAMS — 6

SCALE: 1 1/2"=1'-0"

IDENTIFICATION STAMP
DIV. OF THE STATE ARCHITECT
APP: 03-124589 INC:
REVIEWED FOR
SS ☑ FLS ☑ ACS ☑
DATE: 04/15/2025

American Modular Systems
787 Spreckels Ave., Manteca, CA 95336
Phone (209) 825-1921 Fax (209) 825-7018
www.americanmodular.com

INTELLECTUAL-PROPERTY & PROPRIETARY RIGHTS STATEMENT
COPYRIGHT © AMERICAN MODULAR SYSTEMS (AMS)
AMS OWNS ALL COPYRIGHT AND OTHER INTELLECTUAL-PROPERTY AND PROPRIETARY RIGHTS IN THESE DRAWINGS, SPECIFICATIONS, AND THE MATERIAL CONTAINED HEREIN. CERTAIN ELEMENTS SHOWN IN THESE DOCUMENTS ARE REGISTERED TRADEMARKS OF AMS. ALL PATENTABLE MATERIALS CONTAINED IN THESE DOCUMENTS AND ORIGINATING WITH AMS WILL REMAIN THE SOLE PROPERTY OF AMS. THESE DRAWING, SPECIFICATIONS, AND THE MATERIAL CONTAINED HEREIN MAY NOT BE REPRODUCED, TRANSMITTED, COPIED, DISTRIBUTED, MODIFIED, OR OTHERWISE DISPOSED OF (DIRECTLY OR INDIRECTLY) AND MAY NOT BE USED (IN WHOLE OR IN PART) TO ASSIST IN THE CONSTRUCTION, DESIGN, OR OTHER MAKING OF, OR FOR THE PURPOSE OF FURNISHING ANY INFORMATION FOR THE CONSTRUCTION, DESIGN, OR OTHER MAKING OF, ANY BUILDINGS (MODULAR OR OTHERWISE), DRAWINGS, SPECIFICATIONS, PRINTS, APPARATUS, OR PARTS THEREOF, EXCEPT AS EXPRESSLY PERMITTED BY WRITTEN CONSENT OF, OR IN A WRITTEN AGREEMENT WITH, AMS. SUBMITTAL OR DISTRIBUTION TO MEET OFFICIAL REGULATORY REQUIREMENTS WILL NOT BE CONSTRUED AS PUBLICATION IN DEROGATION OF AMS'S COPYRIGHT OR OTHER INTELLECTUAL-PROPERTY OR PROPRIETARY RIGHTS.

PRE-CHECKED SET NAME
24' x 40' THRU 120' x 40'
STANDARD MODULAR BUILDING
(HIGH SEISMIC)
FORM

SITE SPECIFIC PROJECT NAME
VENTURA COLLEGE
(1) 72'x40' BUILDING

APPROVED
DIV. OF THE STATE ARCHITECT
APP: 04-122051 PC
REVIEWED FOR
SS ☑ FLS ☑ ACS ☑ CG ☑
DATE: 04/03/2024

☒ 2022 CBC PRE-CHECK (PC) DOCUMENT
A SEPARATE PROJECT APPLICATION FOR CONSTRUCTION IS REQUIRED.

MANUFACTURER PROFESSIONAL OF RECORD ON PC

LICENSED ARCHITECT RANDAL PATRICK CAVANAGH No. C12631 Ren. 3-31-25 STATE OF CALIFORNIA

REGISTERED PROFESSIONAL ENGINEER MANNY D. FRESCH No. S3380 STRUCTURAL STATE OF CALIFORNIA RST#22214

03/13/2024

THESE DRAWINGS ARE PRELIMINARY AND NOT FOR CONSTRUCTION UNLESS STAMPED & SIGNED BY THE DESIGN PROFESSIONAL OF RECORD.

REVISIONS

1	
2	
3	
4	

DRAWN BY:	AA
SCALE:	AS NOTED
DATE:	MM/DD/YY
PROJECT NO:	XXXX-22

SHEET TITLE:
MOMENT FRAME CONNECTION DETAILS

SHEET NUMBER:
S5.1

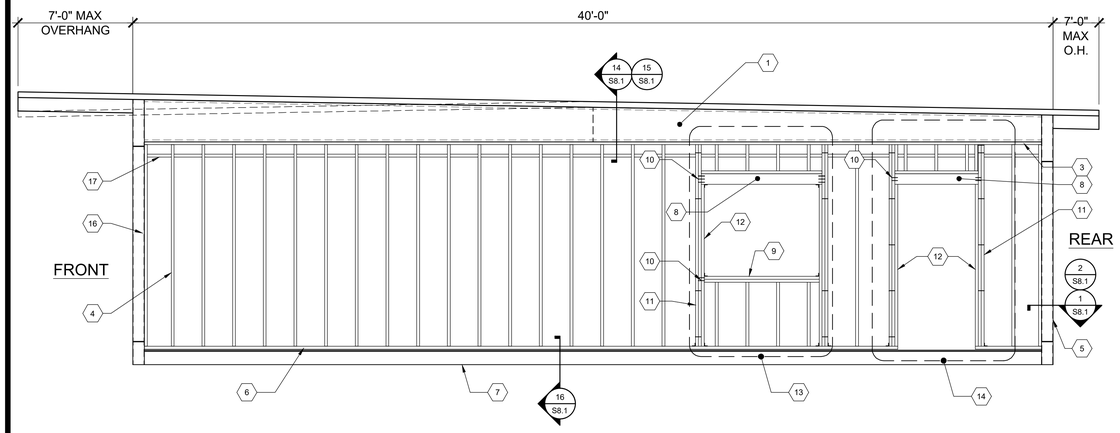

NOTE:
SEE S9.0 FOR ALTERNATE STEEL STUD WALL FRAMING.

1. ROOF BEAM PER SHEET S5.0
2. 2x6 MIN. TOP PLATE - NO SPLICE
3. 2x6 MIN. TOP PLATE
4. 2x6 MIN. STUDS SPACED PER SCHEDULE W/(3) 0.131"Ø x3" END NAILS OR (4) 0.131"Ø x3" TOE NAILS T&B TO PLATES TYP.
5. HSS COLUMN PER SHEET S5.0
6. 2x6 MIN. BOTTOM PLATE - NO SPLICE (P.T. AT CONCRETE FLOORS)
6A. 2x6 MIN. BOTTOM PLATE (P.T. AT CONCRETE FLOORS)
7. PERIMETER FLOOR BEAM PER SHEET S5.0
8. HEADER PER OPENING SCHEDULE
9. WINDOW SILL PER OPENING SCHEDULE
10. END NAILS THROUGH KING STUD TO HEADER SILL PER OPENING SCHEDULE
11. KING STUDS PER OPENING SCHEDULE
12. 2x6 MIN. TRIMMER
13. OPTIONAL WINDOW OPENING FRAMING PER SCHEDULE (REFER TO 4/S8.0 FOR DETAILS AND FLOOR PLANS FOR LOCATIONS)
14. OPTIONAL DOOR OPENING FRAMING PER SCHEDULE (REFER TO 5/S8.0 FOR DETAILS AND FLOOR PLANS FOR LOCATIONS)
15. HVAC OPENING @ EXTERIOR WALL (600#MAX WT.) SEE DETAIL 3/S8.1 FOR HVAC ATTACHMENT - SEE DETAIL 3/S8.1 FOR HVAC ATTACHMENT
16. 2x DOUBLE NAILER
17. FIRE BLOCKING @ 10'-0" AFF VERTICALLY, HORIZONTALLY AT THE CEILING AND FLOOR LEVELS.

NOTE: SEE CARPENTRY NOTES SHEET N1.0 SECTION 6 FOR WOOD SPECIES & GRADE

KEY NOTES

EXTERIOR WALL SCHEDULE			
FINISH TYPE	WALL FINISH COMMENTS	STUD TYPE	STUD SPACING
7/8" HARDI-BOARD w/ SYNTHETIC STUCCO OR 7/16" HARDI-LAP SIDING	WALL FINISH PER ~~A5.4~~, A5.5, A5.6 & A5.7	HEM FIR #2 OR DOUG FIR #2	16" O.C. MAX
~~1/2" PLYWOOD SHEATHING CONFORMING TO PS1-09, APA RATED, 5 PLY 32/16", OR 1/2" OSB PANELS EXPOSURE 1 w/ 7/8" STUCCO~~	~~WALL FINISH PER A5.2 & A5.3; NAILING PER BLDG SECTIONS[1,2]~~	~~HEM FIR #2 OR DOUG FIR #2~~	~~16" O.C. MAX~~

FOOTNOTES
1. ALL NAILS IN EXTERIOR APPLICATIONS SHALL BE GALVANIZED.
2. TYPICAL PLYWOOD NAILING WHERE OCCURS: 0.131"Ø x2 1/2" GALV. NAILS @ 6" O.C. E.N. & 12" O.C. F.N. (ALL EDGES BLOCKED).

TYPICAL SIDE WALL FRAMING (MONO/DUAL PITCH)

SCALE: 3/8"=1'-0" | A

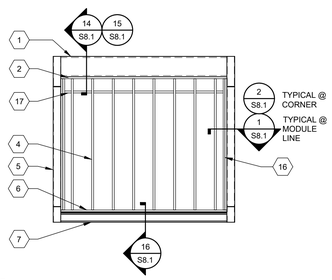

NOTE:
~~SEE S9.0 FOR ALTERNATE STEEL STUD WALL FRAMING.~~

TYP. END WALL FRAMING w/ NO OPENINGS SCALE: 1/4"=1'-0" | 1

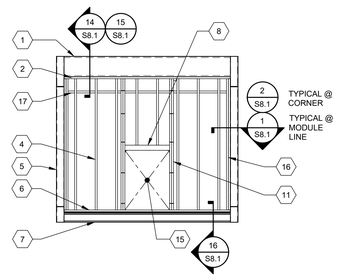

NOTE:
~~SEE S9.0 FOR ALTERNATE STEEL STUD WALL FRAMING.~~

TYP. END WALL FRAMING w/ INDOOR HVAC UNIT (OPTIONAL) SCALE: 1/4"=1'-0" | 2

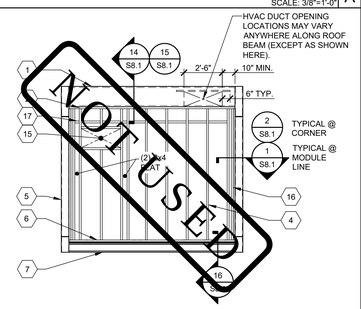

NOTE:
SEE S9.0 FOR ALTERNATE STEEL STUD WALL FRAMING.

TYP. END WALL FRAMING w/ WALL HUNG HVAC UNIT (OPTIONAL) SCALE: 1/4"=1'-0" | 3

EXTERIOR WALL FINISH/WALL STUD SCHEDULE

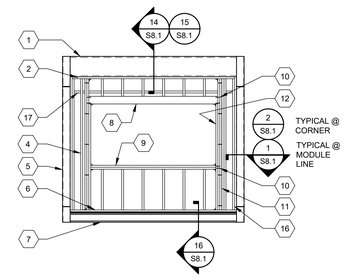

NOTE:
~~SEE S9.0 FOR ALTERNATE STEEL STUD WALL FRAMING.~~

TYPICAL END WALL FRAMING WINDOW SCALE: 1/4"=1'-0" | 4

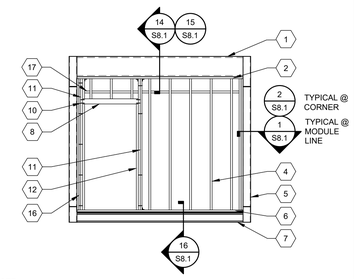

NOTE:
~~SEE S9.0 FOR ALTERNATE STEEL STUD WALL FRAMING.~~

TYPICAL END WALL FRAMING w/ DOOR SCALE: 1/4"=1'-0" | 5

DOOR/WINDOW OPENING AT TYPICAL WALL (NO STUCCO)								
					HEADER TO KING STUD NAILING		WINDOW SILL TO KING STUD NAILING	
OPENING SIZE	HEADER	WINDOW SILL[2] (AS APPLICABLE)	KING STUDS[1]	KING STUD INTERNAIL SPACING	# END NAILS 1ST KING STUD TO HEADER[3] (0.131"Øx3" NAILS)	# FACE NAILS KING STUD TO KING STUD @ HEADER (0.131"Øx3" NAILS)	# END NAILS 1ST KING STUD TO WINDOW SILL[3] (0.131"Øx3" NAILS)	# FACE NAILS KING STUD TO KING STUD @ WINDOW SILL (0.131"Øx3" NAILS)
>8'-0" TO 10'-0"	6x6	(2) 2x6	(3) 2x6	0.131"Øx3" NAILS @ 12" O.C. MAX STAGGERED	6	3	4	2
>6'-0" TO 8'-0"	6x6	(1) 2x6	(2) 2x6		5	3	3	2
>4'-0" TO 6'-0"	4x6 FLAT	(1) 2x6	(2) 2x6		4	2	3	2
4'-0" OR LESS	4x6 FLAT	(1) 2x6	(2) 2x6		4	2	3	2

DOOR/WINDOW OPENING AT STUCCO WALL								
					HEADER TO KING STUD NAILING		WINDOW SILL TO KING STUD NAILING	
OPENING SIZE	HEADER	WINDOW SILL[2] (AS APPLICABLE)	KING STUDS[1]	KING STUD INTERNAIL SPACING	# END NAILS 1ST KING STUD TO HEADER[3] (0.131"Øx3" NAILS)	# FACE NAILS KING STUD TO KING STUD @ HEADER (0.131"Øx3" NAILS)	# END NAILS 1ST KING STUD TO WINDOW SILL[3] (0.131"Øx3" NAILS)	# FACE NAILS KING STUD TO KING STUD @ WINDOW SILL (0.131"Øx3" NAILS)
>8'-0" TO 10'-0"	6x6	(2) 2x6	(3) 2x6	0.131"Øx3" NAILS @ 12" O.C. MAX STAGGERED	6	3	4	2
>6'-0" TO 8'-0"	6x6	(2) 2x6	(3) 2x6		5	3	4	2
>4'-0" TO 6'-0"	4x6 FLAT	(1) 2x6	(2) 2x6		4	2	3	2
4'-0" OR LESS	4x6 FLAT	(1) 2x6	(2) 2x6		4	2	3	2

FOOTNOTES
1. PROVIDE (2) SIMPSON A34 T&B OF KING STUDS TO PLATES FOR OPENINGS GREATER THAN 4'-0". PROVIDE (1) SIMPSON A34 T&B OF KING STUDS TO PLATES FOR OPENINGS 4'-0" OR LESS.
2. WHEN MORE THAN A SINGLE SILL PLATE IS REQUIRED, INTERNAIL w/ 0.131"Øx3" NAILS @ 12" O.C. STAGGERED.
3. TWO (2) END NAILS PER LAMINATION MINIMUM.

OPENING SCHEDULE

IDENTIFICATION STAMP
DIV. OF THE STATE ARCHITECT
APP: 03-124589 INC:
REVIEWED FOR
SS ☑ FLS ☑ ACS ☑
DATE: 04/15/2025

AMS®
American Modular Systems
787 Spreckels Ave., Manteca, CA 95336
Phone (209) 825-1921 Fax (209) 825-7018
www.americanmodular.com

INTELLECTUAL-PROPERTY & PROPRIETARY RIGHTS STATEMENT
COPYRIGHT © AMERICAN MODULAR SYSTEMS (AMS)
AMS OWNS ALL COPYRIGHT AND OTHER INTELLECTUAL-PROPERTY AND PROPRIETARY RIGHTS IN THESE DRAWINGS, SPECIFICATIONS, AND THE MATERIAL CONTAINED HEREIN. CERTAIN ELEMENTS SHOWN IN THESE DOCUMENTS ARE REGISTERED TRADEMARKS OF AMS. ALL PATENTABLE MATERIALS CONTAINED IN THESE DOCUMENTS AND ORIGINATING WITH AMS WILL REMAIN THE SOLE PROPERTY OF AMS. THESE DRAWINGS, SPECIFICATIONS, AND THE MATERIAL CONTAINED HEREIN MAY NOT BE REPRODUCED, TRANSMITTED, COPIED, DISTRIBUTED, MODIFIED, OR OTHERWISE DISPOSED OF (DIRECTLY OR INDIRECTLY) AND MAY NOT BE USED (IN WHOLE OR IN PART) TO ASSIST IN THE CONSTRUCTION, DESIGN, OR OTHER MAKING OF, OR FOR THE PURPOSE OF FURNISHING ANY INFORMATION FOR THE CONSTRUCTION, DESIGN, OR OTHER MAKING OF, ANY BUILDINGS (MODULAR OR OTHERWISE), DRAWINGS, SPECIFICATIONS, PRINTS, APPARATUS, OR PARTS THEREOF, EXCEPT AS EXPRESSLY PERMITTED BY WRITTEN CONSENT OF, OR IN A WRITTEN AGREEMENT WITH, AMS. SUBMITTAL OR DISTRIBUTION TO MEET OFFICIAL REGULATORY REQUIREMENTS WILL NOT BE CONSTRUED AS PUBLICATION IN DEROGATION OF AMS'S COPYRIGHT OR OTHER INTELLECTUAL-PROPERTY OR PROPRIETARY RIGHTS.

PRE-CHECKED SET NAME
24' x 40' THRU 120' x 40'
STANDARD MODULAR BUILDING
(HIGH SEISMIC)
FORM®

SITE SPECIFIC PROJECT NAME
VENTURA COLLEGE
(1) 72'x40' BUILDING

APPROVED
DIV. OF THE STATE ARCHITECT
APP: 04-122051 PC
REVIEWED FOR
SS ☑ FLS ☑ ACS ☑ CG ☑
DATE: 04/03/2024

☒ 2022 CBC PRE-CHECK (PC) DOCUMENT
A SEPARATE PRELIMINARY AND CATALOG CONSTRUCTION PLAN REQUIRED

MANUFACTURER PROFESSIONAL OF RECORD ON PC
LICENSED ARCHITECT PATRICK O'MALLEY No. C12631 Ren. 3-31-25 STATE OF CALIFORNIA
REGISTERED PROFESSIONAL ENGINEER MARK D. FRANCH No. S3380 STRUCTURAL STATE OF CALIFORNIA RST#22214
03/13/2024
THESE DRAWINGS ARE PRELIMINARY AND NOT FOR CONSTRUCTION UNLESS STAMPED & SIGNED BY THE DESIGN PROFESSIONAL OF RECORD.

REVISIONS
1
2
3
4

DRAWN BY:	AA
SCALE:	AS NOTED
DATE:	MM/DD/YY
PROJECT NO:	XXXX-22

SHEET TITLE:
WALL FRAMING
ELEVATIONS & SCHEDULES
- WOOD STUDS

SHEET NUMBER:
S8.0

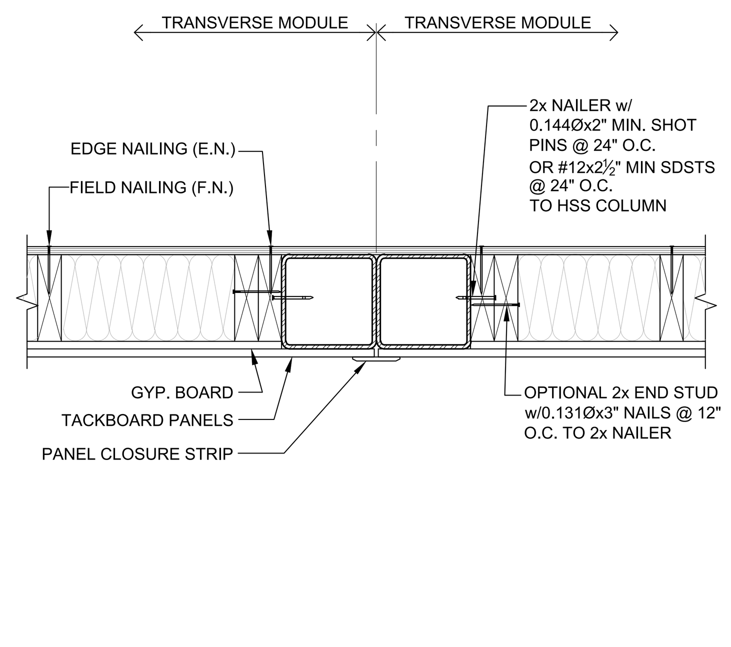

WALL TO COLUMN TYP. DETAIL @ MODLINES — 1
FOR COLUMN LOCATION REFER TO ARCH. DETAILS — SCALE: 1-1/2" = 1'-0"

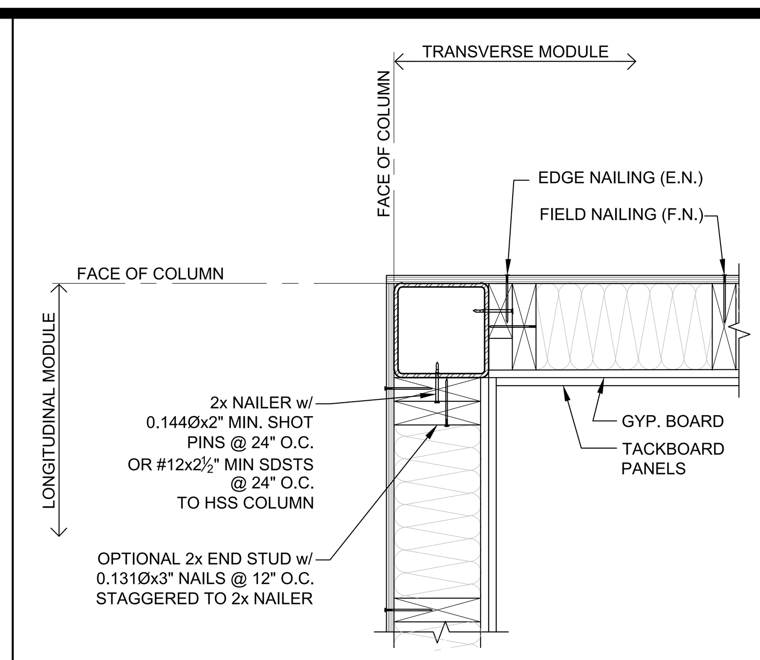

WALL TO COLUMN TYP. DETAIL @ CORNER — 2
FOR COLUMN LOCATION REFER TO ARCH. DETAILS — SCALE: 1-1/2" = 1'-0"

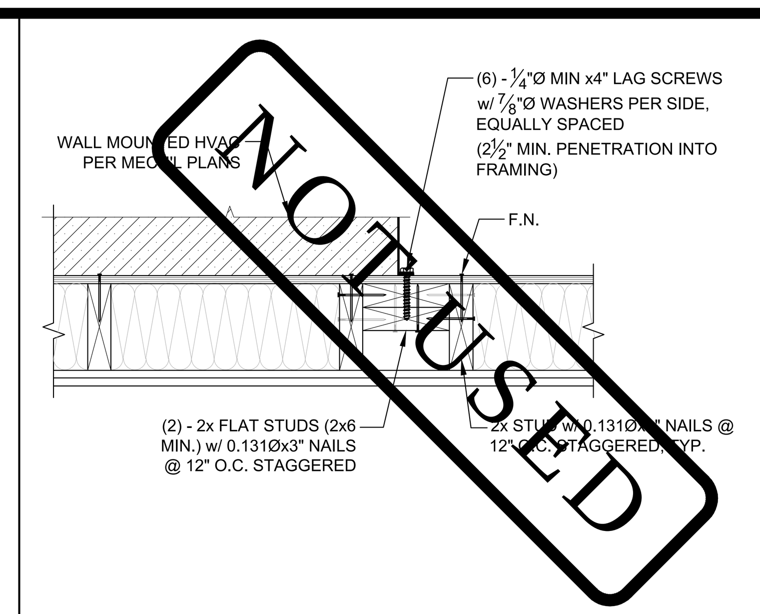

WALL HUNG HVAC ATTACHMENT DETAIL — 3
SCALE: 1-1/2" = 1'-0"

NOT USED — 4

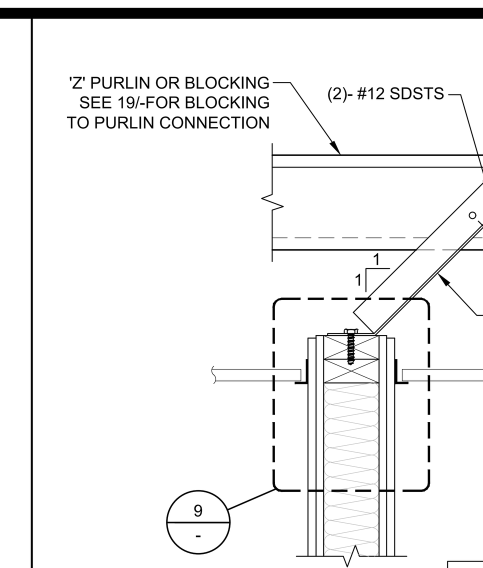

NOTE:
WALL MUST BE BRACED @ 8'-0" MAX BY EITHER AN INTERSECTING WALL OR WITH TOP PLATE BRACING TO ROOF FRAMING.

TYP. INTERIOR WALL BRACING — 5
BRACE PARALLEL TO PURLINS — SCALE: 1-1/2" = 1'-0"

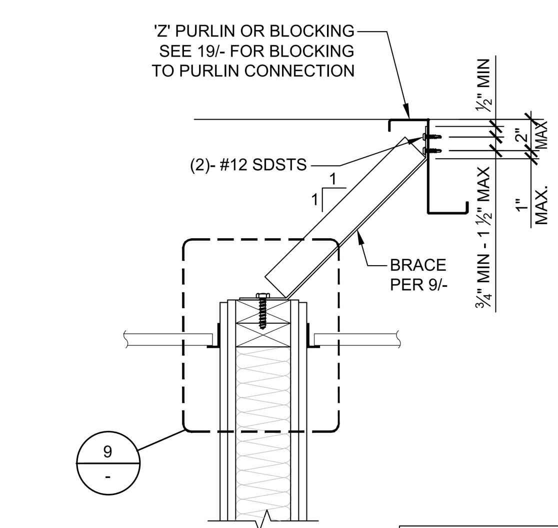

NOTE:
WALL MUST BE BRACED @ 8'-0" MAX BY EITHER AN INTERSECTING WALL OR WITH TOP PLATE BRACING TO ROOF FRAMING.

TYP. INTERIOR WALL BRACING — 6
BRACE PERPENDICULAR TO PURLINS — SCALE: 1-1/2" = 1'-0"

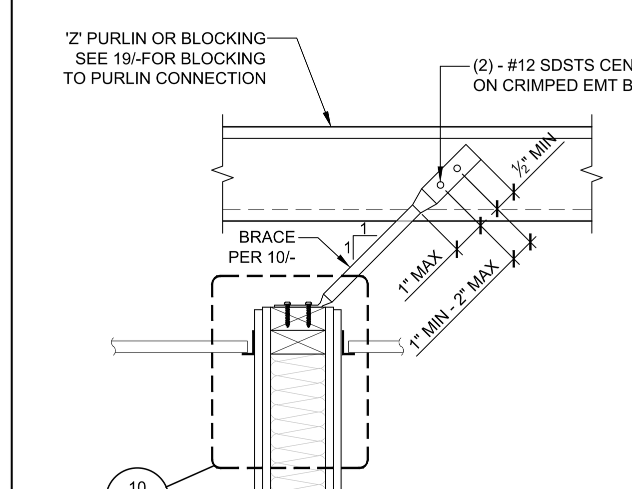

NOTE:
WALL MUST BE BRACED @ 8'-0" MAX BY EITHER AN INTERSECTING WALL OR WITH TOP PLATE BRACING TO ROOF FRAMING.

ALT. INTERIOR WALL BRACING w/ EMT BRACE — 7
BRACE PARALLEL TO PURLINS — SCALE: 1-1/2" = 1'-0"

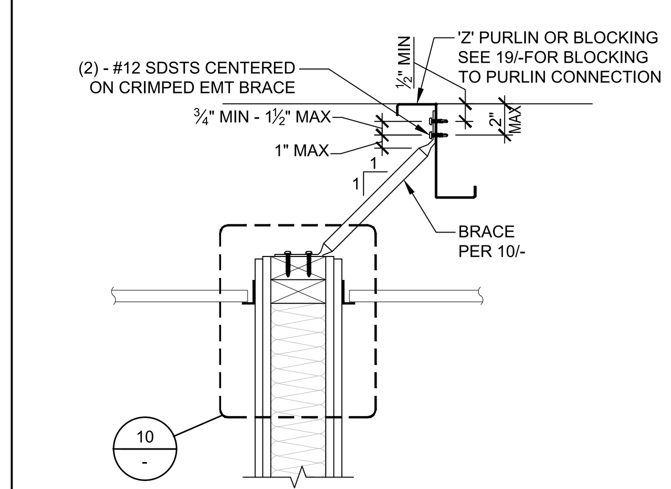

NOTE:
WALL MUST BE BRACED @ 8'-0" MAX BY EITHER AN INTERSECTING WALL OR WITH TOP PLATE BRACING TO ROOF FRAMING.

ALT. INTERIOR WALL BRACING w/ EMT BRACE — 8
BRACE PERPENDICULAR TO PURLINS — SCALE: 1-1/2" = 1'-0"

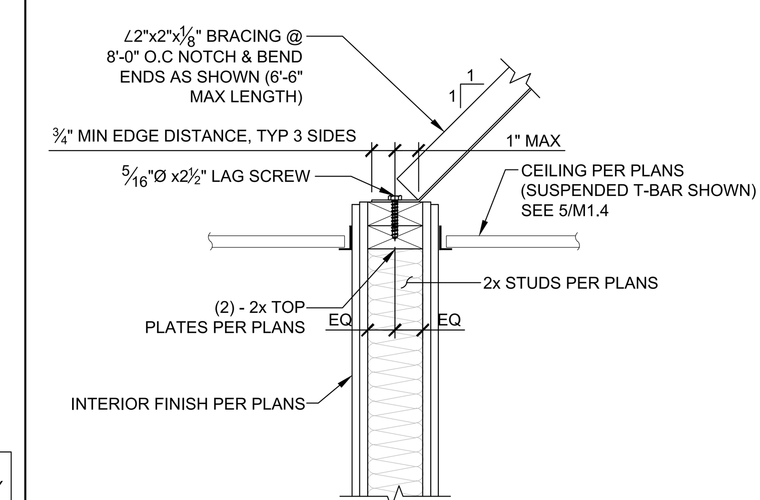

TYP. INTERIOR WALL BRACING — 9
INTERIOR PARTITION BRACING — SCALE: 1-1/2" = 1'-0"

EMT BRACE SCHEDULE	
MAX LENGTH	EMT SIZE
5'-2"	¾"Ø
6'-6"	1"Ø

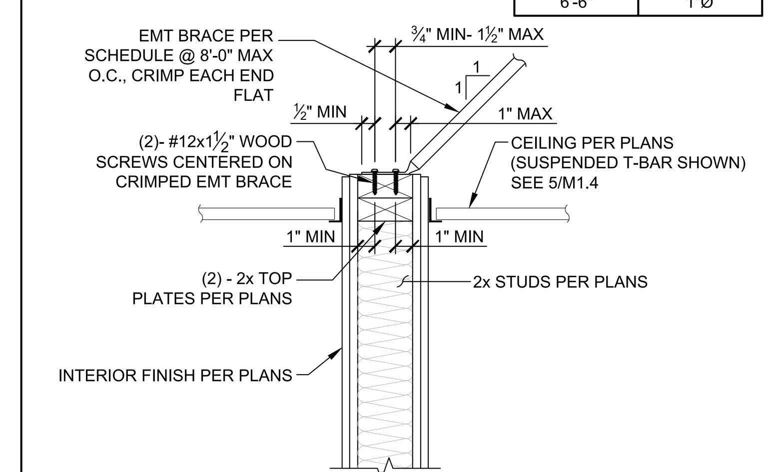

ALT. INTERIOR WALL BRACING — 10
INTERIOR PARTITION BRACING w/ EMT BRACE — SCALE: 1-1/2" = 1'-0"

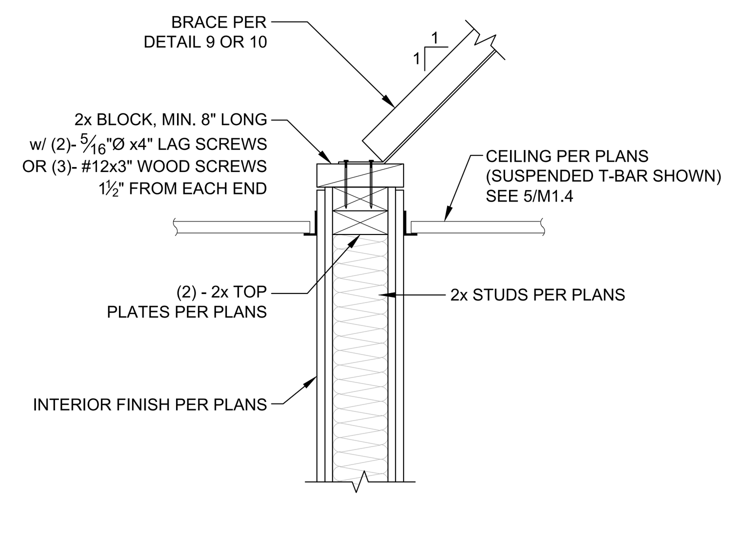

ALT. BLOCKING @ INT. WALL BRACING — 11
SCALE: 1-1/2" = 1'-0"

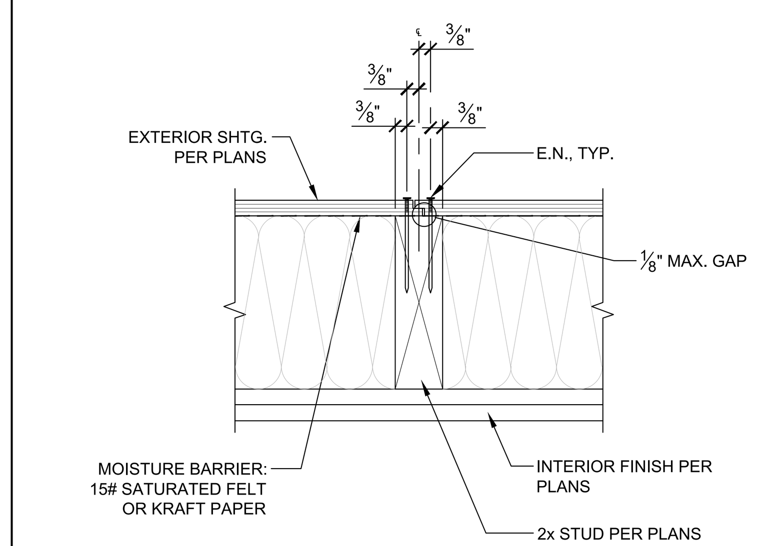

TYP. SHEATHING JOINT — 12
SCALE: 1-1/2" = 1'-0"

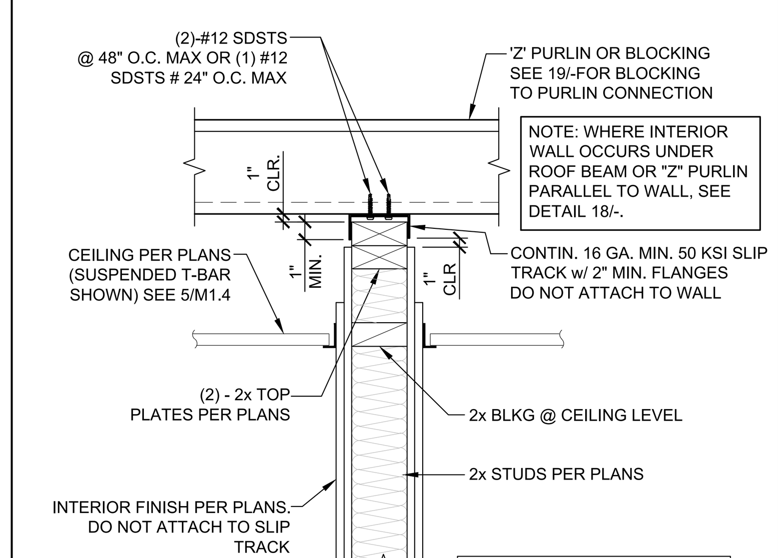

NOTE:
GYPSUM BOARD SHALL NOT BE ATTACHED TO THE SLIP TRACK.

ALT. INTERIOR WALL ATTACHMENT — 13
TO PURLINS OR BLOCKING PERPENDICULAR TO WALL — SCALE: 1-1/2" = 1'-0"

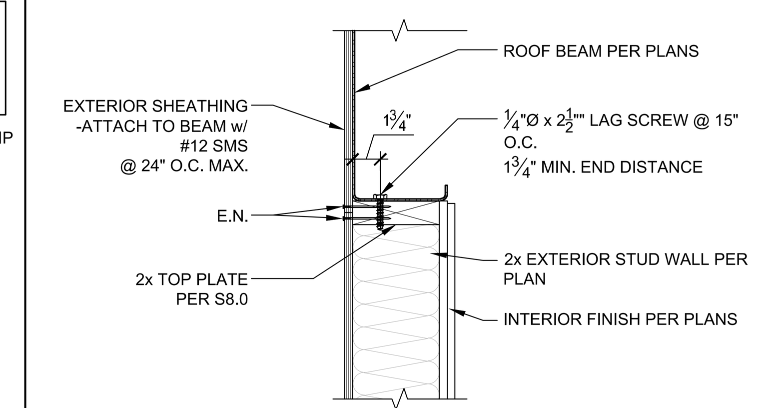

EXTERIOR WALL TO ROOF BEAM DETAIL — 14
SCALE: 1-1/2" = 1'-0"

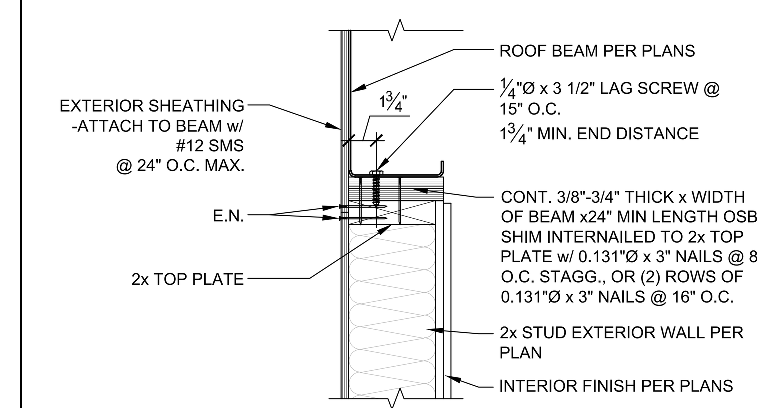

EXTERIOR WALL TO ROOF BEAM DETAIL — 15
AT SHIM CONDITION — SCALE: 1-1/2" = 1'-0"

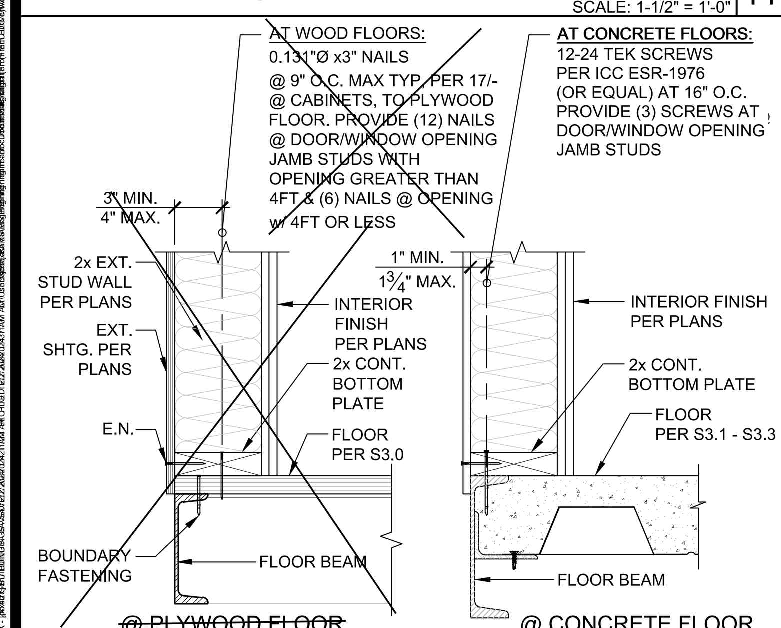

FASTENER END DISTANCE: 2" MIN - ½ OF SPACING MAX FROM ENDS OF PLATES, TYP.

TYP. EXTERIOR WALL TO FLOOR DETAIL — 16
SCALE: 1-1/2" = 1'-0"

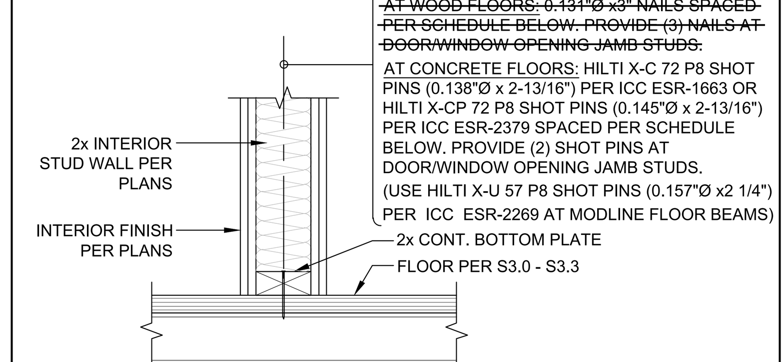

SILL PLATE FASTENER SPACING SCHEDULE		
	CONCRETE FLOOR	WOOD FLOOR
NO CABINETS	24" O.C.	24" O.C.
CABINETS ON ONE SIDE OF WALL	10" O.C.	8" O.C.
CABINETS ON BOTH SIDES OF WALL	5" O.C.	4" O.C.

FASTENER END DISTANCE: 2" MIN - ½ OF SPACING MAX FROM ENDS OF PLATES, TYP.

TYP. INTERIOR NON-BEARING WALL ATTACHMENT — 17
SCALE: 1-1/2" = 1'-0"

NOTE:
GYPSUM BOARD SHALL NOT BE ATTACHED TO SLIP TRACK

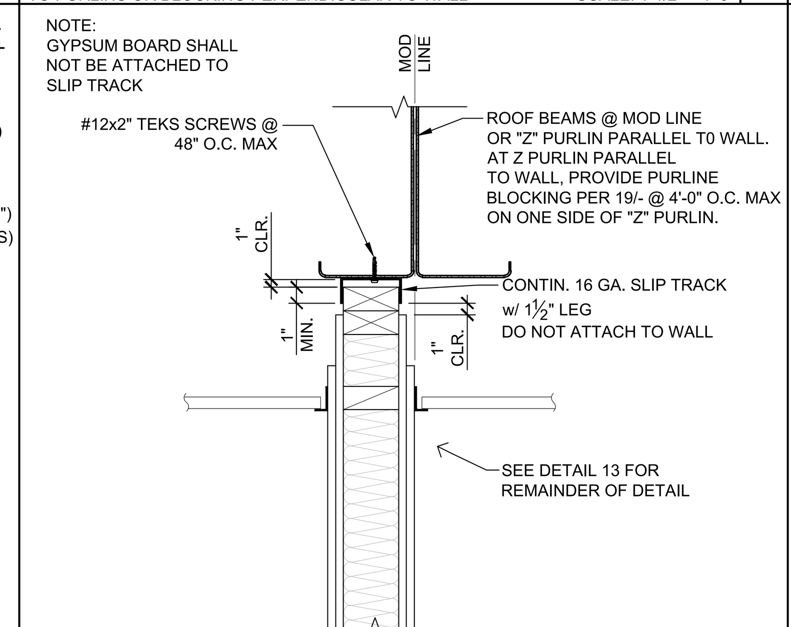

TYP. INTERIOR NON-BEARING WALL ATTACHMENT — 18
TO ROOF BEAMS @ MODLINE OR 'Z' PURLINS PARALLEL TO WALL — SCALE: 1-1/2" = 1'-0"

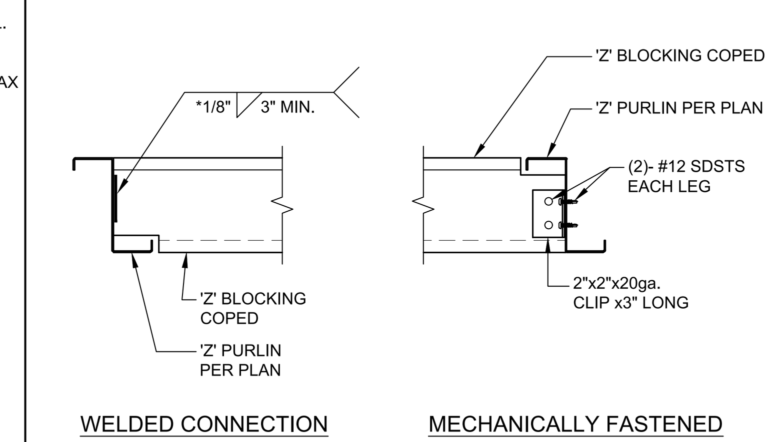

*NOTE: MAX FILLET WELD SIZE SHALL BE EQUAL TO THE THE THICKNESS OF THE THINNER SHEET STEEL (AWS D1.3, SECTION 2.3.3)

PURLIN BLOCKING CONNECTIONS — 19
SCALE: 1-1/2" = 1'-0"

TYPICAL INTERIOR NON-BEARING PARTITION WALL NOTES:

1. STUD SIZE: 2x4 MIN.
2. STUD SPACING: 16" O.C. MAX
3. WOOD SPECIES & GRADE: PER CARPENTRY NOTES SHEET N1.0 SECTION 6.
4. STUD NAILING TO T&B PLATES: (3)-0.131"Ø x 3" END NAILS OR (4)-0.131"Ø x 3" TOE NAILS.
5. DOUBLE 2x TOP PLATES: 0.131"Ø x 3" NAILS @ 16" O.C. TYP. LAP SPLICE 4'-0" MIN. w/0.131"Ø x 3" NAILS @ 6" O.C. & LAP CORNERS w/(4)-0.131"Ø x 3" NAILS.
6. INTERSECTIONS: FACE NAIL END STUD TO CROSS WALL (INCLUDING EXTERIOR WALLS) w/0.131"Ø x 3" NAILS @ 12" O.C. (ATTACH PER 2/- @ HSS COLUMNS)
7. DOOR, WINDOW, & HVAC OPENINGS: PER REQUIREMENTS FOR EXTERIOR STUCCO WALLS PER SHEET S8.0 EXCEPT FRAMING MAY BE 2x4 MIN.

PURLIN BLOCKING CONNECTIONS — 20

IDENTIFICATION STAMP
DIV. OF THE STATE ARCHITECT
APP: 03-124589 INC:
REVIEWED FOR
SS ☑ FLS ☑ ACS ☑
DATE: 04/15/2025

American Modular Systems
787 Spreckels Ave., Manteca, CA 95336
Phone (209) 825-1921 Fax (209) 825-7018
www.americanmodular.com

INTELLECTUAL-PROPERTY & PROPRIETARY RIGHTS STATEMENT
COPYRIGHT © AMERICAN MODULAR SYSTEMS (AMS)
AMS OWNS ALL COPYRIGHT AND OTHER INTELLECTUAL-PROPERTY AND PROPRIETARY RIGHTS IN THESE DRAWINGS, SPECIFICATIONS, AND THE MATERIAL CONTAINED HEREIN. CERTAIN ELEMENTS SHOWN IN THESE DOCUMENTS ARE REGISTERED TRADEMARKS OF AMS. ALL PATENTABLE MATERIALS CONTAINED IN THESE DOCUMENTS AND ORIGINATING WITH AMS WILL REMAIN THE SOLE PROPERTY OF AMS. THESE DRAWING, SPECIFICATIONS, AND THE MATERIAL CONTAINED HEREIN MAY NOT BE REPRODUCED, TRANSMITTED, COPIED, DISTRIBUTED, MODIFIED, OR OTHERWISE DISPOSED OF (DIRECTLY OR INDIRECTLY) AND MAY NOT BE USED (IN WHOLE OR IN PART) TO ASSIST IN THE CONSTRUCTION, DESIGN, OR OTHER MAKING OF, OR FOR THE PURPOSE OF FURNISHING ANY INFORMATION FOR THE CONSTRUCTION, DESIGN, OR OTHER MAKING OF, ANY BUILDINGS (MODULAR OR OTHERWISE), DRAWINGS, SPECIFICATIONS, PRINTS, APPARATUS, OR PARTS THEREOF, EXCEPT AS EXPRESSLY PERMITTED BY WRITTEN CONSENT OF, OR IN A WRITTEN AGREEMENT WITH, AMS. SUBMITTAL OR DISTRIBUTION TO MEET OFFICIAL REGULATORY REQUIREMENTS WILL NOT BE CONSTRUED AS PUBLICATION IN DEROGATION OF AMS'S COPYRIGHT OR OTHER INTELLECTUAL-PROPERTY OR PROPRIETARY RIGHTS.

PRE-CHECKED SET NAME
24' x 40' THRU 120' x 40' STANDARD MODULAR BUILDING (HIGH SEISMIC)
FORM

SITE SPECIFIC PROJECT NAME
VENTURA COLLEGE
(1) 72'x40' BUILDING

~~APPROVED
DIV. OF THE STATE ARCHITECT
APP: 04-122051 PC
REVIEWED FOR
SS ☑ FLS ☑ ACS ☑ CG ☑
DATE: 04/03/2024~~

☒ 2022 CBC PRE-CHECK (PC) DOCUMENT
A SEPARATE PROJECT APPLICATION FOR CONSTRUCTION IS REQUIRED.

MANUFACTURER PROFESSIONAL OF RECORD ON PC

03/13/2024

THESE DRAWINGS ARE PRELIMINARY AND NOT FOR CONSTRUCTION UNLESS STAMPED & SIGNED BY THE DESIGN PROFESSIONAL OF RECORD.

REVISIONS
1
2
3
4

DRAWN BY:	AA
SCALE:	AS NOTED
DATE:	MM/DD/YY
PROJECT NO:	XXXX-22

SHEET TITLE:
WALL FRAMING DETAILS - WOOD STUDS

SHEET NUMBER:
S8.1

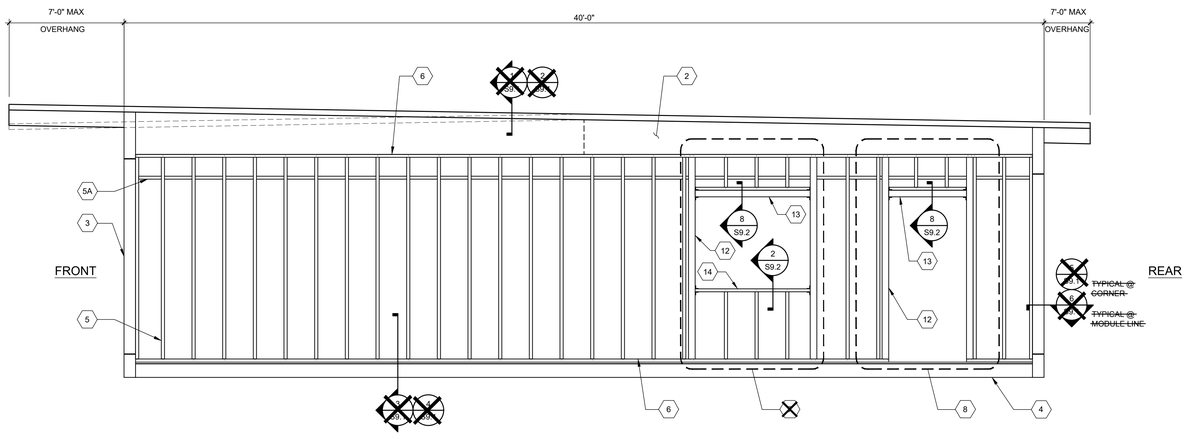

~~NOTE:~~
~~FOR ADDITIONAL 2x4 ATTACHMENT AROUND OPENING-SEE DETAIL 6~~

1. TRANSVERSE ROOF BEAM PER SHEET S5.0
2. LONGITUDINAL ROOF BEAM PER SHEET S5.0
3. HSS COLUMN PER SHEET S5.0
4. PERIMETER FLOOR BEAM PER SHEET S5.0
5. STEEL STUDS PER STUD/TRACK SCHEDULE @ 16" O.C.
5A. STEEL BLOCKING @ HORIZONTAL PLYWOOD EDGES - SEE 20/S9.1
6. STEEL TRACK PER STUD/TRACK SCHEDULE
7. ~~OPTIONAL WINDOW OPENING MAX 10'-0" WIDE (REFER TO 4/- 1&2/S9.2 FOR DETAILS & FLOOR PLANS FOR LOCATIONS)~~
8. ~~OPTIONAL DOOR OPENING (REFER TO 5/- FOR DETAILS AND FLOOR PLANS FOR LOCATIONS)~~
9. ~~HVAC OPENING - REFER TO 6 & 7/- FOR OPENING DETAILS & 18 & 19/S9.1 FOR WALL HUNG HVAC ATTACHMENT DETAILS~~
10. 2x ADDITIONAL ATTACHMENT FOR FRAMING PER 6/- SEE KEYNOTE 11
11. ATTACHMENT: #8 SCREWS @ 8" O.C. THRU 2x4 TO METAL STUDS
12. KING STUD PER OPENING SCHEDULE
13. ~~WINDOW / DOOR HEADER PER OPENING SCHEDULE~~
14. ~~WINDOW SILL PER OPENING SCHEDULE~~

TYPICAL SIDE WALL FRAMING (MONO/DUAL PITCH)

SCALE: 3/8"=1'-0" | A

KEY NOTES

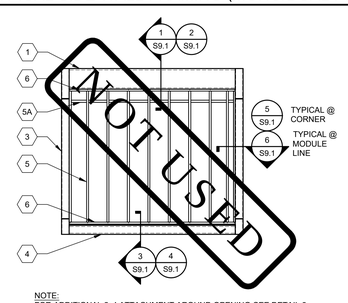

NOTE:
FOR ADDITIONAL 2x4 ATTACHMENT AROUND OPENING-SEE DETAIL 6

TYPICAL END WALL FRAMING w/NO OPENINGS
SCALE: 1/4"=1'-0" | 1

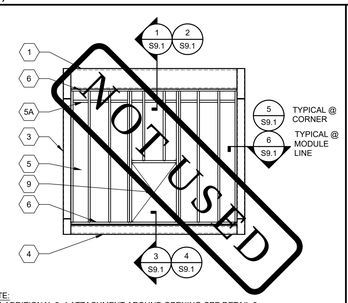

NOTE:
FOR ADDITIONAL 2x4 ATTACHMENT AROUND OPENING-SEE DETAIL 6

TYPICAL END WALL FRAMING w/INDOOR HVAC UNIT
SCALE: 1/4"=1'-0" | 2

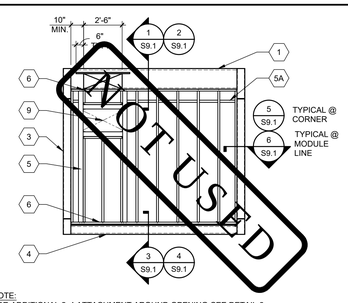

NOTE:
FOR ADDITIONAL 2x4 ATTACHMENT AROUND OPENING-SEE DETAIL 6

TYPICAL END WALL FRAMING WINDOW w/WALL HUNG HVAC UNIT
OPTIONAL
SCALE: 1/4"=1'-0" | 3

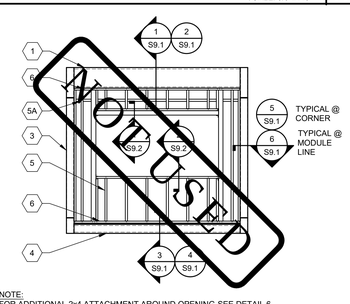

NOTE:
FOR ADDITIONAL 2x4 ATTACHMENT AROUND OPENING-SEE DETAIL 6

TYPICAL END WALL FRAMING WINDOW
SCALE: 1/4"=1'-0" | 4

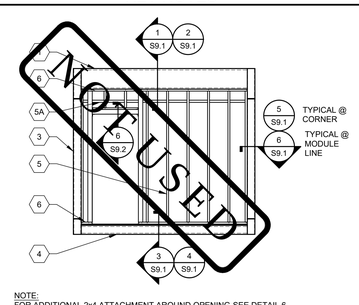

NOTE:
FOR ADDITIONAL 2x4 ATTACHMENT AROUND OPENING-SEE DETAIL 6

TYPICAL END WALL FRAMING w/DOOR
SCALE: 1/4"=1'-0" | 5

FINISH TYPE	FASTENER	SPACING	
		E.N.	F.N.
5/16" HARDIBOARD W/SYNTHETIC STUCCO 5/16" HARDI-LAP SIDING	#10x1" BUGLE HEAD STS	6" O.C.	12" O.C.
1/2" PLYWOOD SHEATHING CONFORMING TO PS1-09, APA RATED, 5 PLY 32/16, OR 7/16" OSB PANELS EXPOSURE 1 WITH 7/8" STUCCO.	#10x1" BUGLE HEAD STS	6" O.C.	12" O.C.

NOT USED

1. ALL SCREWS IN EXTERIOR APPLICATIONS TO BE GALVANIZED.

EXTERIOR WALL FINISH/WALL STUD SCHEDULE

STUD/TRACK SCHEDULE		
	TYP. WALL STUDS	TYP. TRACKS
EXTERIOR WALLS	~~600S162-33 (ALT. 550S162-43)~~	~~600T150-43 (ALT. 550T150-43)~~
INTERIOR WALLS	362S125-30 WITHOUT BOOKSHELVES OR CASEWORK	362T125-30 WITHOUT BOOKSHELVES OR CASEWORK
	600S162-33 WITH BOOKSHELVES OR CASEWORK	600T150-43 WITH BOOKSHELVES OR CASEWORK

NOTES
1. SEE 14/S9.2 FOR TYP. STUD AND TRACK PROPERTIES. STUD AND TRACK SIZES ARE MINIMUM. LARGER STUDS AND TRACKS MAY BE USED FOR ARCHITECTURAL PURPOSES.
2. TOP & BOTTOM TRACKS SHALL BE 43 MILS (18 GA.) MIN. @ EXTERIOR WALLS AND 30 MILS (20 GA.) MIN. @ INTERIOR WALLS U.N.O.
3. ALL WALLS STUDS SPACED AT 16" O.C. MAX. U.N.O
4. AT WALL INTERSECTIONS, ATTACH END STUD TO CROSS WALLS (INCLUDING EXTERIOR WALLS) W/#10 S.M.S. @ 12" O.C. (ATTACH PER 5/9.1 @ HSS COLUMNS)
5. SEE 3/S9.2 FOR TYP. STUD TO TRACK ATTACHMENT.

STUD/TRACK SCHEDULE

NOT USED

EXTERIOR DOOR/WINDOW OPENINGS 6'-0" OR LESS						
	HEADER	ALTERNATE HEADER	WINDOW SILL	ALTERNATE WINDOW SILL	KING STUDS	ALTERNATE KING STUD
DETAIL	6/S9.2	11/S9.2	7/S9.2	12/S9.2	6/S9.2	11/S9.2

EXTERIOR DOOR/WINDOW OPENINGS GREATER THAN 6'-0" UP TO 10'-0"						
	HEADER	ALTERNATE HEADER	WINDOW SILL	ALTERNATE WINDOW SILL	KING STUDS	ALTERNATE KING STUD
DETAIL	1/S9.2	11/S9.2	2/S9.2	12/S9.2	1/S9.2	11/S9.2

INTERIOR DOOR/WINDOW OPENINGS						
	HEADER (6'-0" MAX OPENING)	ALTERNATE HEADER (10'-0" MAX OPENING)	WINDOW SILL (6'-0" MAX OPENING)	ALTERNATE WINDOW SILL (10'-0" MAX OPENING)	KING STUDS (6'-0" MAX OPENING)	ALTERNATE KING STUD (10'-0" MAX OPENING)
DETAIL	15/S9.2	11/S9.2	16/S9.2	12/S9.2	15/S9.2	11/S9.2

INTERIOR WALL: 362S125-30 @ 16" O.C. w/362T125-30 TRACKS (TYP.)

OPENING SCHEDULES

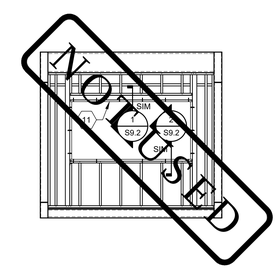

TYPICAL 2x4 ATTACHMENT @ OPENINGS

SCALE: 1/4"=1'-0" | 6

IDENTIFICATION STAMP
DIV. OF THE STATE ARCHITECT
APP: 03-124589 INC:
REVIEWED FOR
SS ☑ FLS ☑ ACS ☑
DATE: 04/15/2025

AMS®
American Modular Systems
787 Spreckels Ave., Manteca, CA 95336
Phone (209) 825-1921 Fax (209) 825-7018
www.americanmodular.com

INTELLECTUAL-PROPERTY & PROPRIETARY RIGHTS STATEMENT
COPYRIGHT © AMERICAN MODULAR SYSTEMS (AMS)
AMS OWNS ALL COPYRIGHT AND OTHER INTELLECTUAL PROPERTY AND PROPRIETARY RIGHTS IN THE DOCUMENTS AND THE MATERIAL CONTAINED HEREIN. MATERIAL PROVIDED HEREIN. CERTAIN ELEMENTS SHOWN IN THESE DOCUMENTS ARE REGISTERED TRADEMARKS OF AMS. ALL PATENTABLE MATERIALS CONTAINED IN THESE DOCUMENTS AND ORIGINATING WITH AMS WILL REMAIN THE SOLE PROPERTY OF AMS. THESE DRAWING, SPECIFICATIONS AND THE MATERIAL CONTAINED HEREIN MAY NOT BE REPRODUCED, TRANSMITTED, COPIED, DISTRIBUTED, MODIFIED, OR OTHERWISE DISPOSED OF (DIRECTLY OR INDIRECTLY) AND MAY NOT BE USED (IN WHOLE OR IN PART) TO ASSIST IN THE CONSTRUCTION, DESIGN, OR OTHER MAKING OF, OR FOR THE PURPOSE OF FURNISHING ANY INFORMATION FOR THE CONSTRUCTION, DESIGN, OR OTHER MAKING OF, ANY BUILDINGS (MODULAR OR OTHERWISE), DRAWINGS, SPECIFICATIONS, PRINTS, APPARATUS, OR PARTS THEREOF, EXCEPT AS EXPRESSLY PERMITTED BY WRITTEN CONSENT OF, OR IN A WRITTEN AGREEMENT WITH, AMS. SUBMITTAL OR DISTRIBUTION TO MEET OFFICIAL REGULATORY REQUIREMENTS WILL NOT BE CONSTRUED AS PUBLICATION IN DEROGATION OF AMS'S COPYRIGHT OR OTHER INTELLECTUAL-PROPERTY OR PROPRIETARY RIGHTS.

PRE-CHECKED SET NAME
24' x 40' THRU 120' x 40'
STANDARD MODULAR BUILDING
(HIGH SEISMIC)
FORM®

SITE SPECIFIC PROJECT NAME
VENTURA COLLEGE
(1) 72'x40' BUILDING

APPROVED
DIV. OF THE STATE ARCHITECT
APP: 04-122051_PC
REVIEWED FOR
SS ☑ FLS ☑ ACS ☑ CG ☑
DATE: 04/03/2024

☒ 2022 CBC PRE-CHECK (PC) DOCUMENT
A SEPARATE PRELIMINARY APPLICATION FOR CONSTRUCTION IS REQUIRED

MANUFACTURER PROFESSIONAL OF RECORD ON PC

LICENSED ARCHITECT PATRICK KEEFER No. C12631 Ren. 3-31-25 STATE OF CALIFORNIA

REGISTERED PROFESSIONAL ENGINEER MARIA D. FRANCO No. S3380 STRUCTURAL STATE OF CALIFORNIA

RST#22214

03/13/2024

THESE DRAWINGS ARE PRELIMINARY AND NOT FOR CONSTRUCTION UNLESS STAMPED & SIGNED BY THE DESIGN PROFESSIONAL OF RECORD.

REVISIONS
1
2
3
4

DRAWN BY:	AA
SCALE:	AS NOTED
DATE:	MM/DD/YY
PROJECT NO:	XXXX-22

SHEET TITLE:
WALL FRAMING ELEVATIONS & SCHEDULES - METAL STUD OPTION

SHEET NUMBER:
S9.0

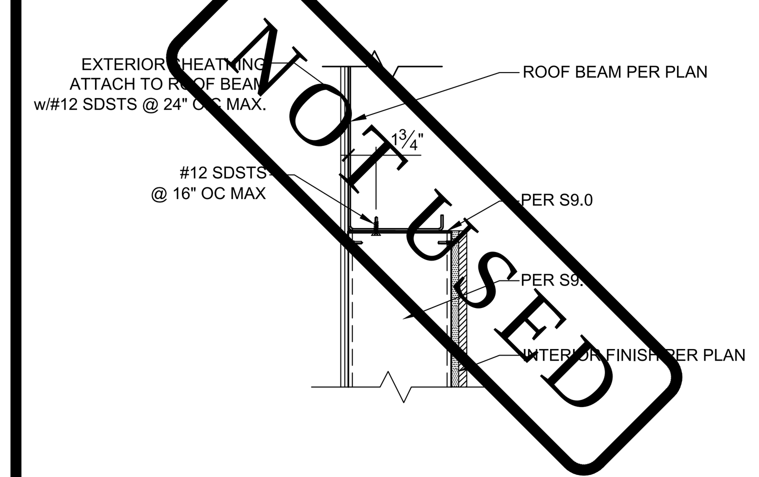

WALL TO ROOF BEAM DETAIL SCALE: 1 1/2"=1'-0" 1

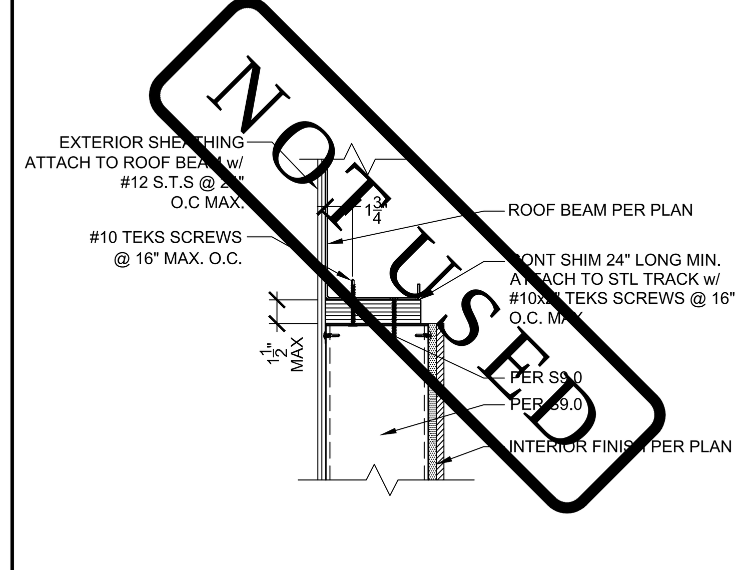

WALL TO ROOF BEAM DETAIL SCALE: 1 1/2"=1'-0" 2
SHIM CONDITION

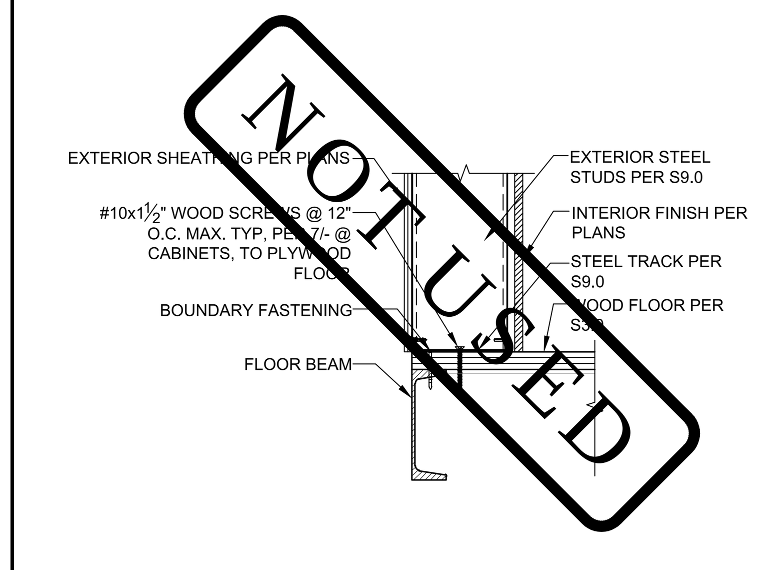

WALL TO FLOOR ATTACHMENT TYP. DETAIL SCALE: 1 1/2"=1'-0" 3
PLYWOOD FLOOR

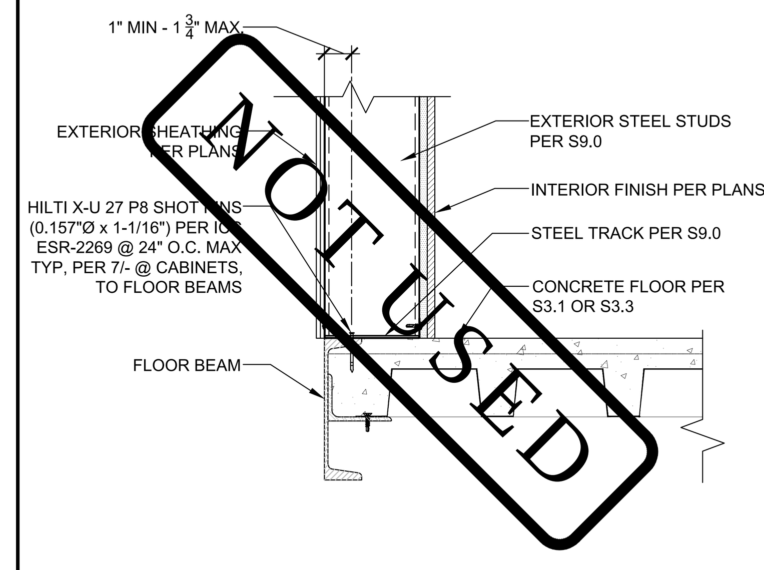

WALL TO FLOOR ATTACHMENT TYP. DETAIL SCALE: 1 1/2"=1'-0" 4
CONCRETE FLOOR

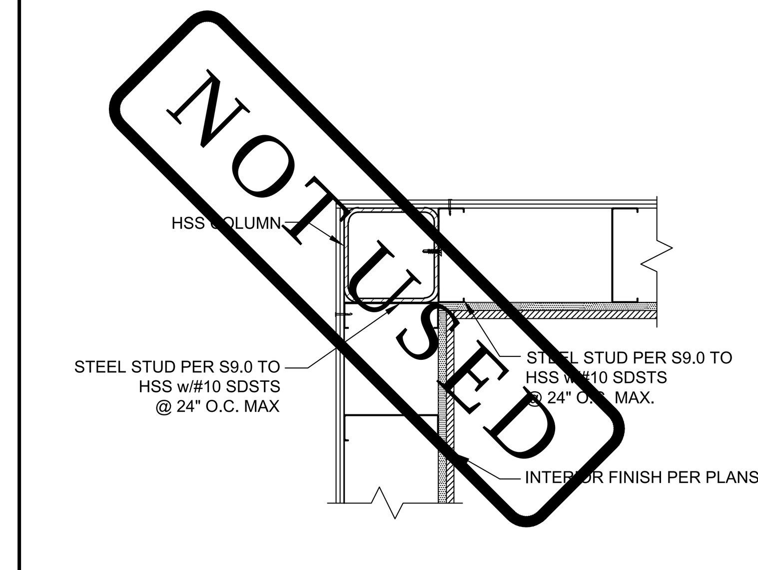

WALL TO COLUMN TYP. DETAIL @ CORNERS SCALE: 1 1/2"=1'-0" 5
CONCRETE FLOOR

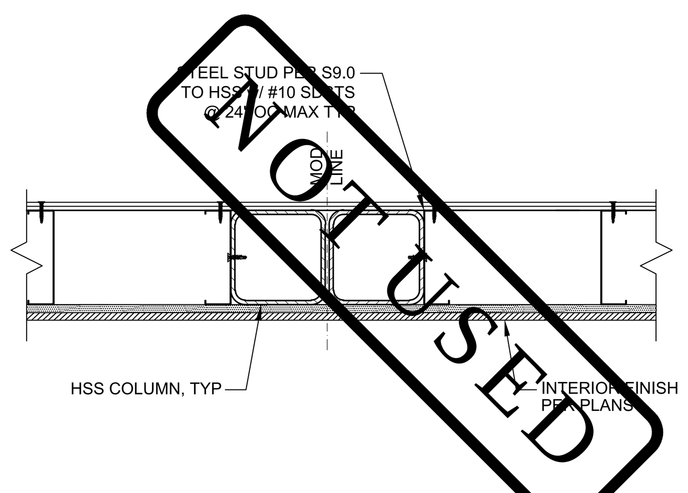

WALL TO COLUMN TYP. DETAILS @ MODLINES SCALE: 1 1/2"=1'-0" 6

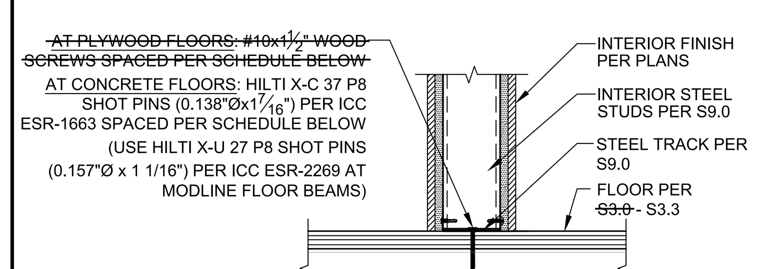

SILL PLATE FASTENER SPACING SCHEDULE		
	CONCRETE FLOOR	WOOD FLOOR
NO CABINETS	24" O.C.	24" O.C.
CABINETS ON ONE SIDE OF WALL	10" O.C.	8" O.C.
CABINETS ON BOTH SIDES OF WALL	5" O.C.	4" O.C.

INTERIOR WALL CONNECTION @ FLOOR SCALE: 1 1/2"=1'-0" 7
WALL PARALLEL TO FLOOR JOIST

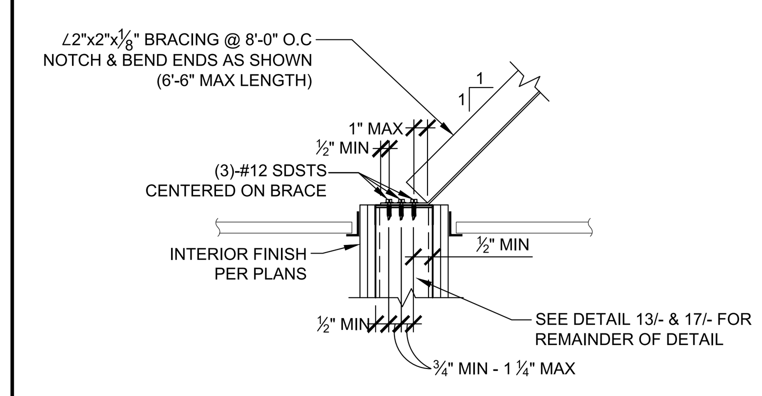

TYP. INTERIOR WALL BRACING SCALE: 1 1/2"=1'-0" 8

NOTE:
GYPSUM BOARD SHALL NOT BE ATTACHED TO THE SLIP TRACK

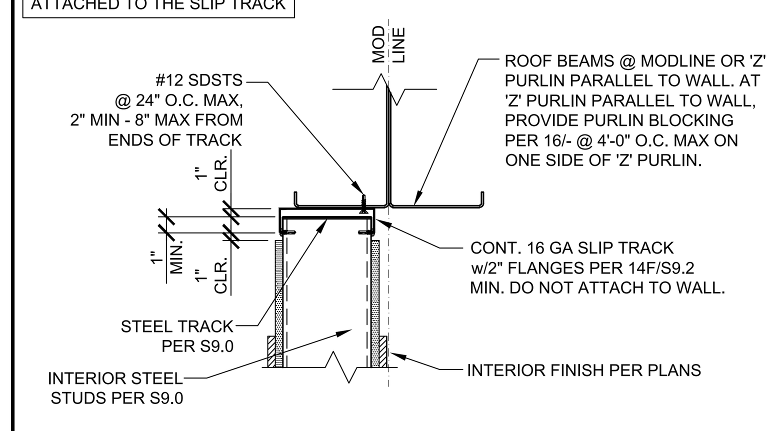

INTERIOR WALL ATTACHMENT SCALE: 1 1/2"=1'-0" 9
TO ROOF BEAMS AT MODLINE OR 'Z' PURLIN PARALLEL TO WALL

NOTE:
GYPSUM BOARD SHALL NOT BE ATTACHED TO THE SLIP TRACK

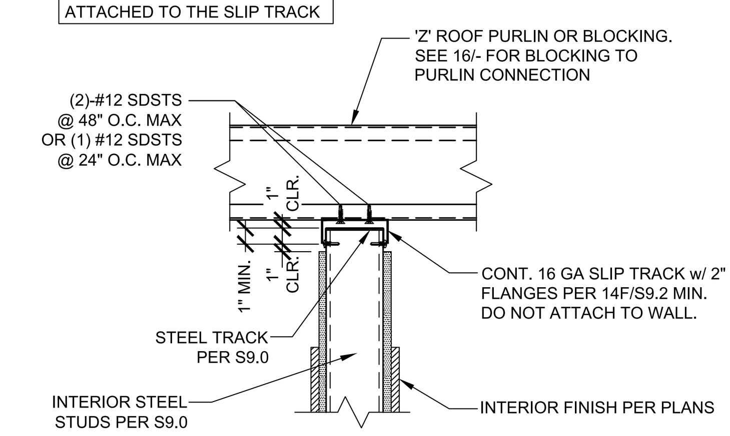

NOTE: WHERE INTERIOR WALL OCCURS UNDER ROOF BEAM OR 'Z' PURLIN PARALLEL TO WALL, SEE DETAIL 9/-

INTERIOR WALL ATTACHMENT SCALE: 1 1/2"=1'-0" 10
TO PURLINS

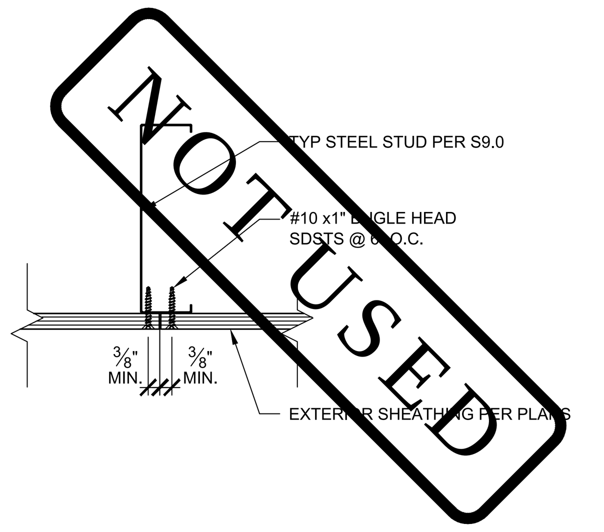

PLYWOOD JOINT SCALE: 1 1/2"=1'-0" 11

EMT BRACE SCHEDULE	
MAX LENGTH	EMT SIZE
5'-2"	¾"Ø
6'-6"	1"Ø

NOTE:
WALL MUST BE BRACED @ 8'-0" MAX BY EITHER AN INTERSECTING WALL OR WITH TOP TRACK BRACING TO ROOF FRAMING

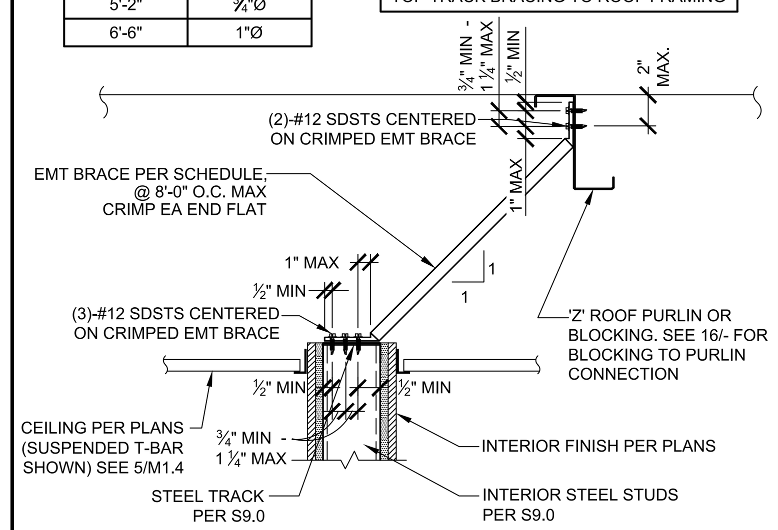

INTERIOR NON-BEARING WALL BRACING SCALE: 1 1/2"=1'-0" 12
PARALLEL TO PURLINS

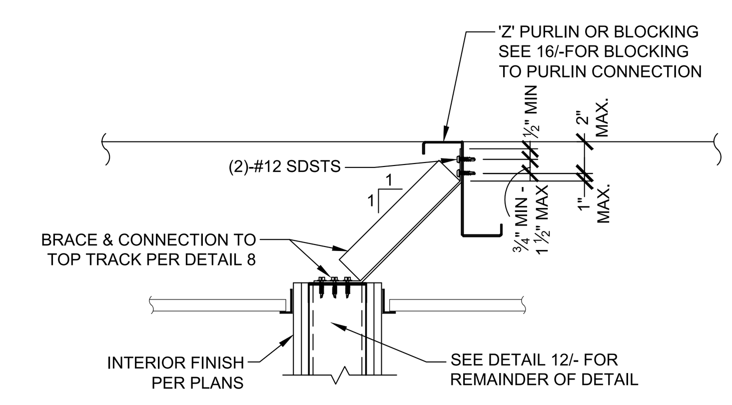

NOTE:
WALL MUST BE BRACED @ 8'-0" MAX BY EITHER AN INTERSECTING WALL OR WITH TOP PLATE BRACING TO ROOF FRAMING.

TYP. INTERIOR WALL BRACING SCALE: 1 1/2"=1'-0" 13
BRACE PERPENDICULAR TO PURLINS OR BLOCKING

NOTE:
WALL MUST BE BRACED @ 8'-0" MAX BY EITHER AN INTERSECTING WALL OR WITH TOP TRACK BRACING TO ROOF FRAMING

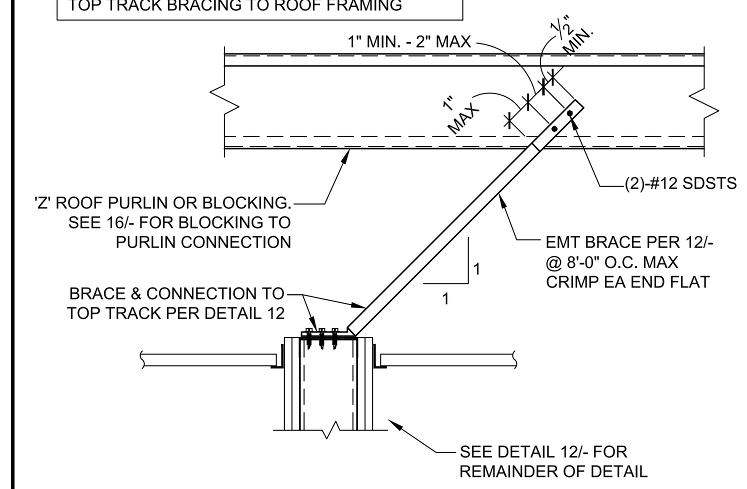

INTERIOR NON-BEARING WALL BRACING SCALE: 1 1/2"=1'-0" 14
PERPENDICULAR TO PURLINS - BLOCKING CONDITION

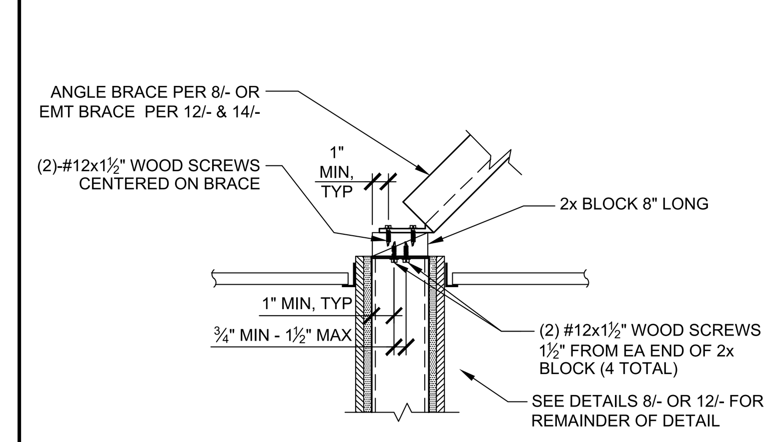

ALT. BLOCKING @ INT. WALL BRACING SCALE: 1 1/2"=1'-0" 15

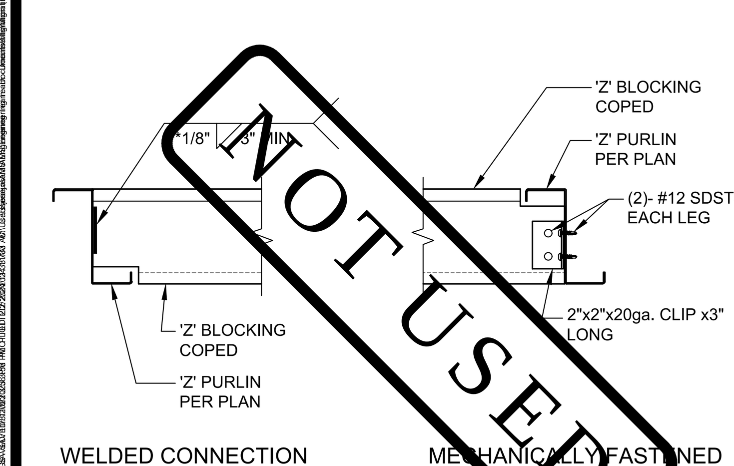

*NOTE: MAX FILLET WELD SIZE SHALL BE EQUAL TO THE THE THICKNESS OF THE THINNER SHEET STEEL (AWS D1.3, SECTION 2.3.3)

PURLIN BLOCKING CONNECTIONS SCALE: 1 1/2"=1'-0" 16

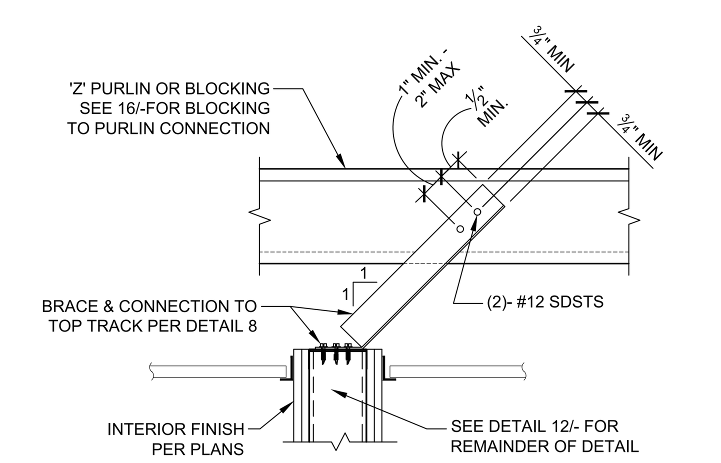

NOTE:
WALL MUST BE BRACED @ 8'-0" MAX BY EITHER AN INTERSECTING WALL OR WITH TOP PLATE BRACING TO ROOF FRAMING.

TYP. INTERIOR WALL BRACING SCALE: 1 1/2"=1'-0" 17
BRACE PARALLEL TO PURLINS OR BLOCKING

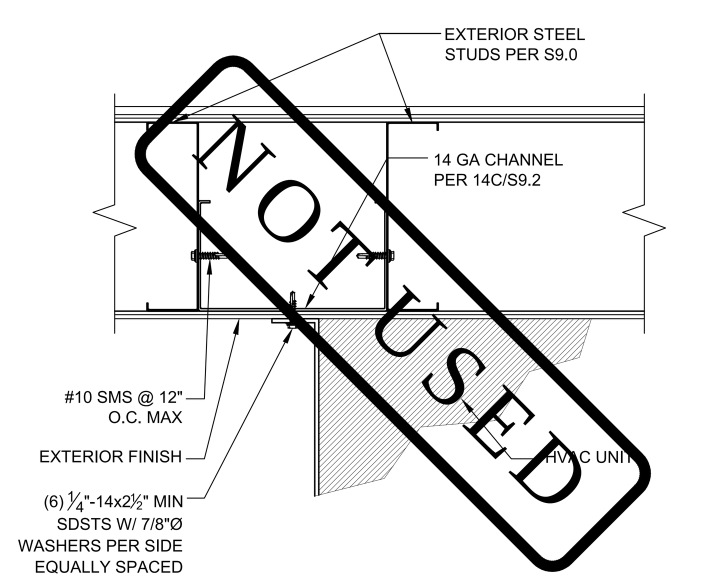

WALL MOUNT HVAC DETAIL SCALE: 1 1/2"=1'-0" 18

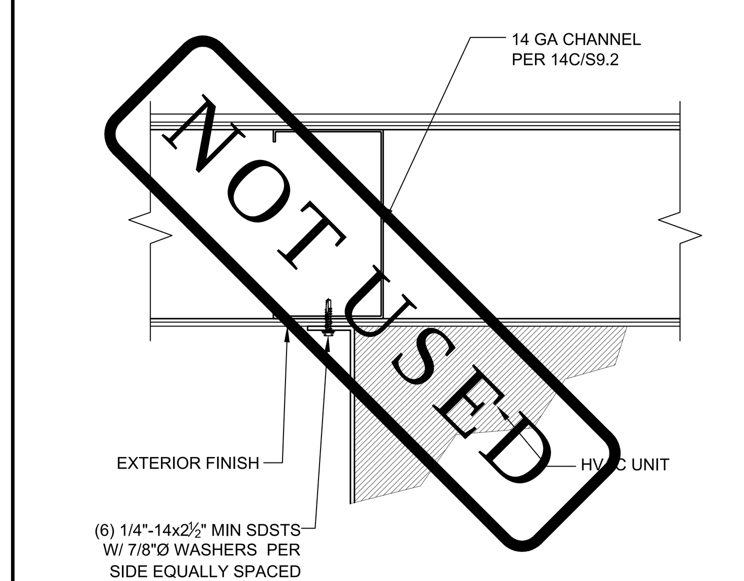

WALL MOUNT HVAC DETAIL SCALE: 1 1/2"=1'-0" 19
ALTERNATE

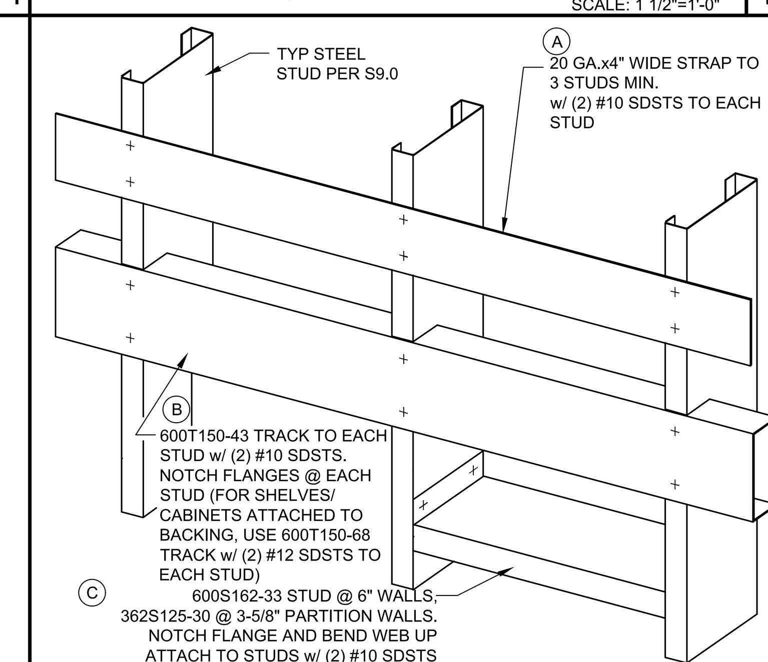

WALL BLOCKING DETAIL SCALE: 1 1/2"=1'-0" 20

IDENTIFICATION STAMP
DIV. OF THE STATE ARCHITECT
APP: 03-124589 INC:
REVIEWED FOR
SS ☑ FLS ☑ ACS ☑
DATE: 04/15/2025

American Modular Systems
787 Spreckels Ave., Manteca, CA 95336
Phone (209) 825-1921 Fax (209) 825-7018
www.americanmodular.com

INTELLECTUAL-PROPERTY & PROPRIETARY RIGHTS STATEMENT
COPYRIGHT © AMERICAN MODULAR SYSTEMS (AMS)
AMS OWNS ALL COPYRIGHT AND OTHER INTELLECTUAL-PROPERTY AND PROPRIETARY RIGHTS IN THESE DRAWINGS, SPECIFICATIONS, AND THE MATERIAL CONTAINED HEREIN. CERTAIN ELEMENTS SHOWN IN THESE DOCUMENTS ARE REGISTERED TRADEMARKS OF AMS. ALL PATENTABLE MATERIALS CONTAINED IN THESE DOCUMENTS AND ORIGINATING WITH AMS WILL REMAIN THE SOLE PROPERTY OF AMS. THESE DRAWING, SPECIFICATIONS, AND THE MATERIAL CONTAINED HEREIN MAY NOT BE REPRODUCED, TRANSMITTED, COPIED, DISTRIBUTED, MODIFIED, OR OTHERWISE DISPOSED OF (DIRECTLY OR INDIRECTLY) AND MAY NOT BE USED (IN WHOLE OR IN PART) TO ASSIST IN THE CONSTRUCTION, DESIGN, OR OTHER MAKING OF, OR FOR THE PURPOSE OF FURNISHING ANY INFORMATION FOR THE CONSTRUCTION, DESIGN, OR OTHER MAKING OF, ANY BUILDINGS (MODULAR OR OTHERWISE), DRAWINGS, SPECIFICATIONS, PRINTS, APPARATUS, OR PARTS THEREOF, EXCEPT AS EXPRESSLY PERMITTED BY WRITTEN CONSENT OF, OR IN A WRITTEN AGREEMENT WITH, AMS. SUBMITTAL OR DISTRIBUTION TO MEET OFFICIAL REGULATORY REQUIREMENTS WILL NOT BE CONSTRUED AS PUBLICATION IN DEROGATION OF AMS'S COPYRIGHT OR OTHER INTELLECTUAL-PROPERTY OR PROPRIETARY RIGHTS.

PRE-CHECKED SET NAME
24' x 40' THRU 120' x 40'
STANDARD MODULAR BUILDING
(HIGH SEISMIC)
FORM

SITE SPECIFIC PROJECT NAME
VENTURA COLLEGE
(1) 72'x40' BUILDING

APPROVED
DIV. OF THE STATE ARCHITECT
APP: 04-122051 PC
REVIEWED FOR
SS ☑ FLS ☑ ACS ☑ CG ☑
DATE: 04/03/2024

☒ 2022 CBC PRE-CHECK (PC) DOCUMENT
A SEPARATE PROJECT APPLICATION FOR CONSTRUCTION IS REQUIRED.

MANUFACTURER PROFESSIONAL OF RECORD ON PC

THESE DRAWINGS ARE PRELIMINARY AND NOT FOR CONSTRUCTION UNLESS STAMPED & SIGNED BY THE DESIGN PROFESSIONAL OF RECORD.

REVISIONS
1
2
3
4

DRAWN BY:	AA
SCALE:	AS NOTED
DATE:	MM/DD/YY
PROJECT NO:	XXXX-22

SHEET TITLE:
WALL FRAMING DETAILS
- METAL STUD OPTION

SHEET NUMBER:
S9.1

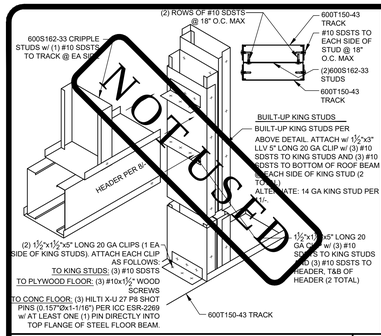

DOOR/WINDOW HEADER DETAIL
GREATER THAN 6'-0" - 10' - 0" MAX OPENINGS (EXTERIOR WALLS) N.T.S. 1

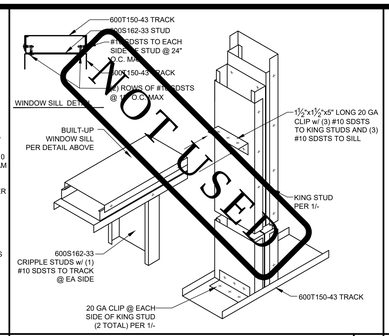

WINDOW SILL DETAIL
GREATER THAN 6'-0" - 10' - 0" MAX OPENINGS (EXTERIOR WALLS) N.T.S. 2

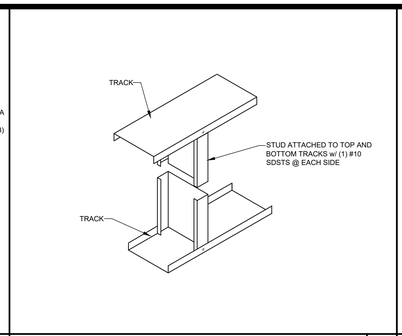

TYP. STUD ATTACHMENT SCALE: N.T.S. 3

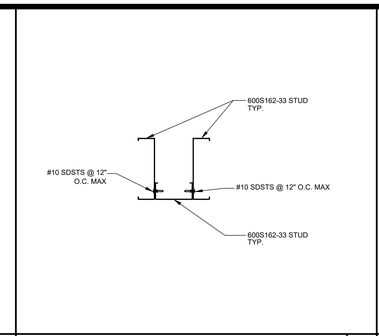

BUILT-UP CHANNEL DETAIL SCALE: N.T.S. 4

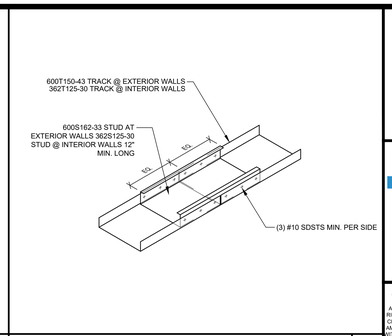

TRACK SPLICE DETAIL SCALE: N.T.S. 5

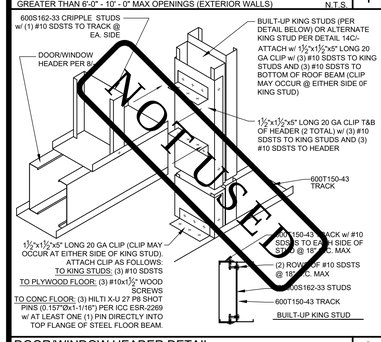

DOOR/WINDOW HEADER DETAIL
6'-0" OR LESS OPENINGS (EXTERIOR WALLS) SCALE: N.T.S. 6

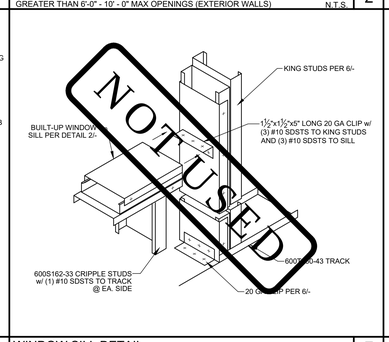

WINDOW SILL DETAIL
6'-0" OR LESS OPENINGS (EXTERIOR WALLS) SCALE: N.T.S. 7

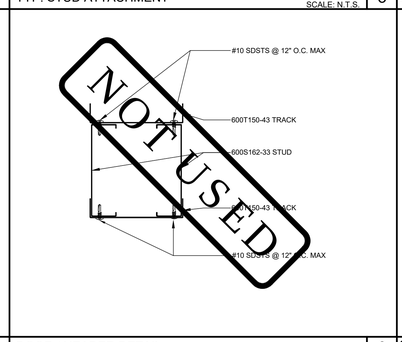

DOOR / HEADER DETAIL SCALE: N.T.S. 8

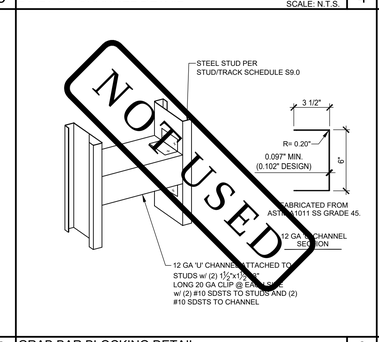

GRAB BAR BLOCKING DETAIL SCALE: N.T.S. 9

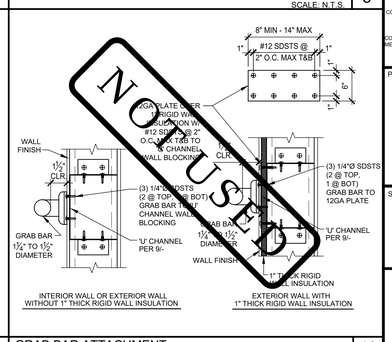

GRAB BAR ATTACHMENT SCALE: N.T.S. 10

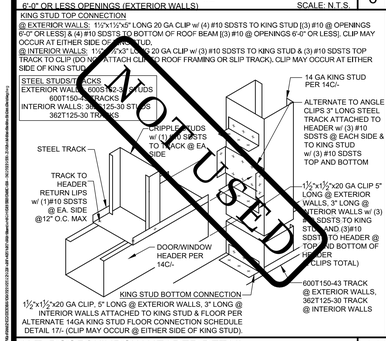

ALT. DOOR/WINDOW HEADER DETAIL
10'-0" MAX OPENINGS (EXTERIOR OR INTERIOR WALLS) SCALE: N.T.S. 11

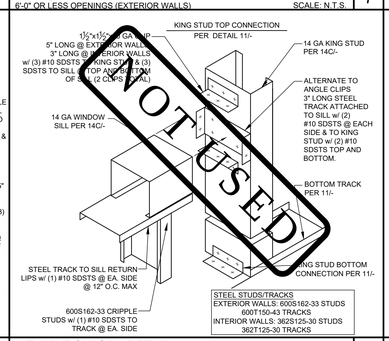

ALT. WINDOW SILL DETAIL
10'-0" MAX OPENINGS (EXTERIOR OR INTERIOR WALLS) SCALE: N.T.S. 12

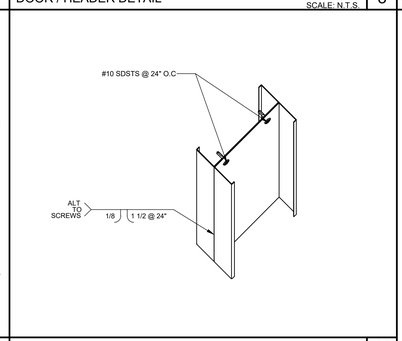

DOUBLE STUD CONNECTION DETAIL SCALE: N.T.S. 13

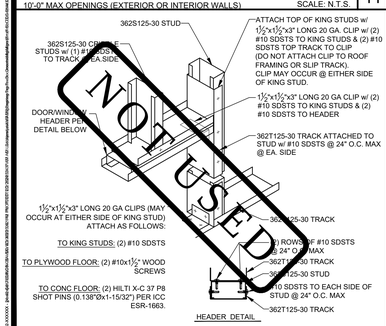

DOOR/WINDOW HEADER DETAIL
6'-0" OR LESS OPENINGS (INTERIOR WALLS) 15

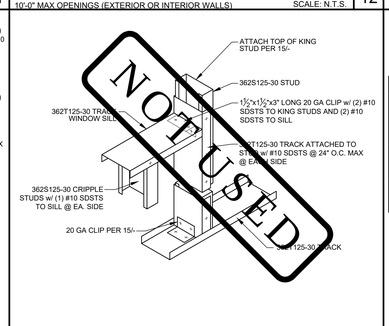

WINDOW SILL DETAIL
6'-0" OR LESS OPENINGS (INTERIOR WALLS) 16

ALTERNATE 14 GA. KING STUD FLOOR CONNECTION SCHEDULE (REF. 11 & 12/-)

	CLIP ANGLE TO KING STUD #10 SDSTS		CLIP ANGLE TO PLYWOOD FLOOR #10x1½" WOOD SCREWS		CLIP ANGLE TO CONCRETE FLOOR	
					HILTI X-U 27 P8 SHOT PINS[1] (0.157"0x1-1/16")	HILTI X-C 37 P8 SHOT PINS[2] (0.138"0x1-15/16")
	EXT. WALL	INT WALL	EXT. WALL	INT WALL	EXT. WALL	INT WALL
6'-0" UP TO 10'-0" OPENINGS	4	3	4	3	3	2
OPENINGS LESS THAN 6'-0"	3	3	3	2	3	2

1. HILTI X-U SHOT PINS PER ICC ESR-2269. AT LEAST ONE (1) SHOT PIN PER CLIP SHALL BE INSTALLED DIRECTLY INTO TOP FLANGE OF STEEL FLOOR BEAM.
2. HILTI X-C SHOT PINS PER ICC ESR-1663.

ALTERNATE 14 GA KING STUD FLOOR CONNECTION SCHEDULE 17

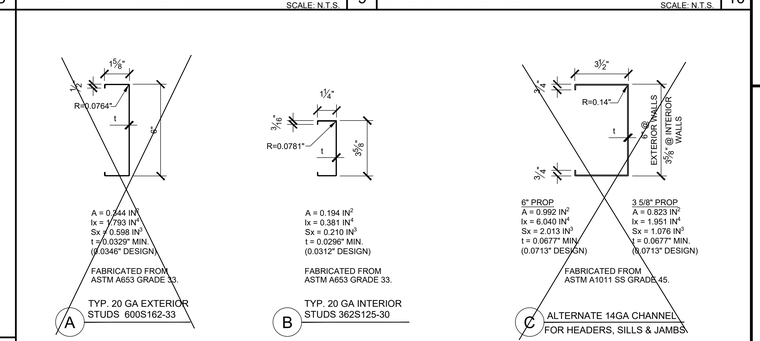

STEEL STUD PROPERTIES SCALE: N.T.S 14

IDENTIFICATION STAMP
DIV. OF THE STATE ARCHITECT
APP: 03-124589 INC:
REVIEWED FOR
SS ☑ FLS ☑ ACS ☑
DATE: 04/15/2025

AMS®
American Modular Systems
787 Spreckels Ave., Manteca, CA 95336
Phone (209) 825-1921 Fax (209) 825-7018
www.americanmodular.com

INTELLECTUAL-PROPERTY & PROPRIETARY RIGHTS STATEMENT
COPYRIGHT © AMERICAN MODULAR SYSTEMS (AMS)
AMS OWNS ALL COPYRIGHT AND OTHER INTELLECTUAL-PROPERTY AND PROPRIETARY RIGHTS IN THESE DRAWINGS, SPECIFICATIONS, AND THE MATERIAL CONTAINED HEREIN. CERTAIN ELEMENTS SHOWN IN THESE DOCUMENTS ARE REGISTERED TRADEMARKS OF AMS. ALL PATENTABLE MATERIALS CONTAINED IN THESE DOCUMENTS AND ORIGINATING WITH AMS WILL REMAIN THE SOLE PROPERTY OF AMS. THESE DRAWING, SPECIFICATIONS AND THE MATERIAL CONTAINED HEREIN MAY NOT BE REPRODUCED, TRANSMITTED, COPIED, DISTRIBUTED, MODIFIED, OR OTHERWISE DISPOSED OF (DIRECTLY OR INDIRECTLY) AND MAY NOT BE USED (IN WHOLE OR IN PART) TO ASSIST IN THE CONSTRUCTION, DESIGN, OR OTHER MAKING OF, OR FOR THE PURPOSE OF FURNISHING ANY INFORMATION FOR THE CONSTRUCTION, DESIGN, OR OTHER MAKING OF, ANY BUILDINGS (MODULAR OR OTHERWISE), DRAWINGS, SPECIFICATIONS, PRINTS, APPARATUS, OR PARTS THEREOF, EXCEPT AS EXPRESSLY PERMITTED BY WRITTEN CONSENT OF, OR IN A WRITTEN AGREEMENT WITH, AMS. SUBMITTAL OR DISTRIBUTION TO MEET OFFICIAL REGULATORY REQUIREMENTS WILL NOT BE CONSTRUED AS PUBLICATION IN DEROGATION OF AMS'S COPYRIGHT OR OTHER INTELLECTUAL-PROPERTY OR PROPRIETARY RIGHTS.

PRE-CHECKED SET NAME
24' x 40' THRU 120' x 40'
STANDARD MODULAR BUILDING
(HIGH SEISMIC)
FORM®

SITE SPECIFIC PROJECT NAME
VENTURA COLLEGE
(1) 72'x40' BUILDING

APPROVED
DIV. OF THE STATE ARCHITECT
APP: 04-122051 PC
REVIEWED FOR
SS ☑ FLS ☑ ACS ☑ CG ☑
DATE: 04/03/2024

☒ 2022 CBC PRE-CHECK (PC) DOCUMENT
A SEPARATE PERMIT AND CALGREEN CONSTRUCTION IS REQUIRED.

MANUFACTURER PROFESSIONAL OF RECORD ON PC

LICENSED ARCHITECT — No. C12631 — Ren 3-31-25 — STATE OF CALIFORNIA
REGISTERED PROFESSIONAL ENGINEER — No. S3380 — STRUCTURAL — STATE OF CALIFORNIA — RST#22214
03/13/2024

THESE DRAWINGS ARE PRELIMINARY AND NOT FOR CONSTRUCTION UNLESS STAMPED & SIGNED BY THE DESIGN PROFESSIONAL OF RECORD.

REVISIONS
1
2
3
4
5

DRAWN BY:	AA
SCALE:	AS NOTED
DATE:	MM/DD/YY
PROJECT NO:	XXXX-22

SHEET TITLE:
TYPICAL METAL STUD FRAMING DETAILS & PROPERTIES

SHEET NUMBER:
S9.2

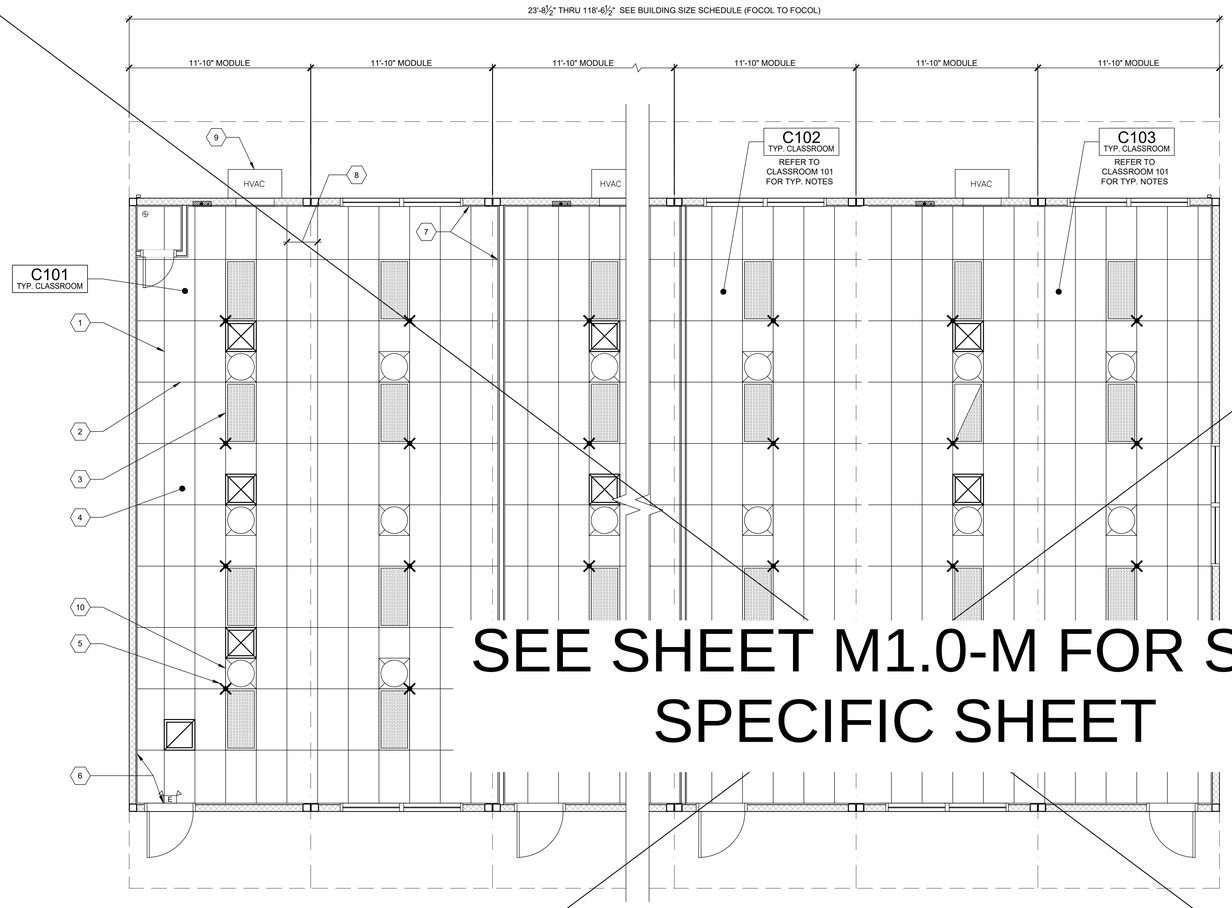

SEE SHEET M1.0-M FOR SITE SPECIFIC SHEET

TYPICAL REFLECTED CEILING PLAN

SCALE: 1/4" = 1'-0" | 1

1. MAIN TEE RUNNER TYP. PER TABLE A, SHEET M1.7
2. CROSS TEE RUNNER TYP. PER TABLE A, SHEET M1.7
3. INTERIOR LIGHT FIXTURE, REFER TO SHEET SHEET E1.0 FOR SPEC'S ATTACHMENT PER DETAIL 7/M1.4
4. CEILING HEIGHT @ 8'-0" MIN.
5. STRUT/SPLAY WIRE ASSEMBLY, SEE 2/M1.4 FOR DETAILS
6. FIXED CEILING END, SEE DETAIL 5A/M1.4
7. FREE CEILING END, SEE DETAIL 5B/M1.4
8. CENTER SECTION THAT CROSSES MODULE LINE TO BE FIELD INSTALLED, SEE DETAIL 5C/M1.4
9. TYP. HVAC UNIT
10. OPTIONAL SOLA-TUBE - SEE DETAIL 1/M1.6

KEY NOTES

1. WHERE TWO OR MORE HVAC UNITS SERVE A COMMON SPACE, UNITS SHALL BE EQUIPPED WITH A DUCT SMOKE DETECTOR FOR AUTO SHUTDOWN. INTERCONNECT WITH FIRE ALARM SYSTEM.
2. AUTOMATIC SHUT-OFF IS NOT REQUIRED WHEN ALL OCCUPIED ROOMS SERVED BY THE AIR HANDLING EQUIPMENT HAVE DIRECT ACCESS TO THE EXTERIOR AND THE TRAVEL DISTANCE DOES NOT EXCEED 100 FT. PER C.M.C. 608.1 EXCEPTION #2.
3. LIGHT FIXTURES MAY BE INSTALLED ROTATED 90° FROM SHOWN TO MATCH T-GRID.
4. PC TITLE 24 HAS BEEN RUN FOR WORSE CASE OUTDOOR VENTILATION REQUIREMENTS (SEE OUTDOOR VENTILATION ON SHEET N2.0 FOR OUR OUTDOOR VENTILATION DESIGN REQUIREMENT NOTES)
5. ACCEPTANCE TESTING PER ENERGY CODE SECTION 10-103
6. ACCEPTANCE TESTS TO BE COMPLETED ON NEWLY INSTALLED OR REPLACEMENT OF MECHANICAL SYSTEMS BEFORE PROJECT COMPLETION PER THE CALIFORNIA ENERGY CODE SECTION 10-103. ACCEPTANCE TESTS MUST BE PERFORMED BY A CERTIFIED ACCEPTANCE TEST TECHNICIAN (ATT). THE ACCEPTANCE TESTING PROCEDURES MUST BE REPEATED, AND DEFICIENCIES CORRECTED UNTIL THE INSTALLATION OF THE SPECIFIED SYSTEMS CONFORM AND PASS THE REQUIRED ACCEPTANCE CRITERIA. COMPLETED NRCA FORMS SHALL BE SUBMITTED TO THE PROJECT INSPECTOR AND THE DISTRICT.

GENERAL NOTES

MEP COMPONENT ANCHORAGE NOTES

ALL MECHANICAL, PLUMBING, AND ELECTRICAL COMPONENTS SHALL BE ANCHORED AND INSTALLED PER THE DETAILS ON THE DSA APPROVED CONSTRUCTION DOCUMENTS. THE FOLLOWING COMPONENTS SHALL BE ANCHORED OR BRACED TO MEET THE FORCE AND DISPLACEMENT REQUIREMENTS PRESCRIBED IN THE 2022 CBC, SECTIONS 1617A.1.18 THROUGH 1617A.1.26 AND ASCE 7-16 CHAPTER 13, 26 AND 30.

1. ALL PERMANENT EQUIPMENT AND COMPONENTS.
2. TEMPORARY, MOVABLE OR MOBILE EQUIPMENT THAT IS PERMANENTLY ATTACHED (E.G. HARD WIRED) TO THE BUILDING UTILITY SERVICES SUCH AS ELECTRICITY, GAS OR WATER. "PERMANENTLY ATTACHED" SHALL INCLUDE ALL ELECTRICAL CONNECTIONS EXCEPT PLUGS FOR110/220 VOLT RECEPTACLES HAVING A FLEXBLE CABLE.
3. TEMPORARY, MOVABLE OR MOBILE EQUIPMENT WHICH IS HEAVIER THAN 400 POUNDS OR HAS A CENTER OF MASS LOCATED 4 FEET OR MORE ABOVE THE ADJACENT FLOOR OR ROOF LEVEL THAT DIRECTLY SUPPORT THE COMPONENT IS REQUIRED TO BE RESTRAINED IN A MANNER APPROVED BY DSA.

THE FOLLOWING MECHANICAL AND ELECTRICAL COMPONENTS SHALL BE POSITIVELY ATTACHED TO THE STRUCTURE BUT NEED NOT DEMONSTRATE DESIGN COMPLIANCE WITH THE REFERENCE NOTED ABOVE. THESE COMPONENTS SHALL HAVE FLEXIBLE CONNECTIONS PROVIDED BETWEEN THE COMPONENT AND ASSOCIATED DUCTWORK, PIPING, AND CONDUIT. FLEXIBLE CONNECTIONS MUST ALLOW MOVEMENT IN BOTH TRANSVERSE AND LONGITUDINAL DIRECTIONS:

A. COMPONENTS WEIGHING LESS THAN 400 POUNDS AND HAVE A CENTER OF MASS LOCATED 4 FEET OR LESS ABOVE THE ADJACENT FLOOR OR ROOF LEVEL THAT DIRECTLY SUPPORT THE COMPONENT.
B. COMPONENTS WEIGHING LESS THAN 20 POUNDS, OR IN THE CASE OF DISTRIBUTED SYSTEMS, LESS THAN 5 POUNDS PER FOOT, WHICH ARE SUSPENDED FROM A ROOF OR FLOOR OR HUNG FROM A WALL.

THE ANCHORAGE OF ALL MECHANICAL, ELECTRICAL AND PLUMBING COMPONENTS SHALL BE SUBJECT TO THE APPROVAL OF THE DESIGN PROFESSIONAL IN GENERAL RESPONSIBLE CHARGE OR STRUCTURAL ENGINEER DELEGATED RESPONSIBILITY AND ACCEPTANCE BY DSA. THE PROJECT INSPECTOR WILL VERIFY THAT ALL COMPONENTS AND EQUIPMENT HAVE BEEN ANCHORED IN ACCORDANCE WITH THE ABOVE REQUIREMENTS.

PIPING, DUCTWORK, AND ELECTRICAL DISTRIBUTION SYSTEM BRACING NOTES

PIPING, DUCTWORK, AND ELECTRICAL DISTRIBUTION SYSTEMS SHALL BE BRACED TO COMPLY WITH THE FORCES AND DISPLACEMENTS PRESCRIBED IN ASCE 7-16 SECTION 13.3 AS DEFINED IN ASCE 7-16 SECTION 13.6.5, 13.6.6, 13.6.7, 13.6.8; AND 2022 CBC, SECTIONS 1617A.1.24, 1617A.1.25 AND 1617A.1.26.

THE METHOD OF SHOWING BRACING AND ATTACHMENTS TO THE STRUCTURE FOR THE IDENTIFIED DISTRIBUTION SYSTEM ARE AS NOTED BELOW. WHEN BRACING AND ATTACHMENTS ARE BASED ON A PRE-APPROVED INSTALLATION GUIDE (E.G., OSHPD OPM FOR 2013 CBC OR LATER), COPIES OF THE BRACING SYSTEM INSTALLATION GUIDE OR MANUAL SHALL BE AVAILABLE ON THE JOBSITE PRIOR TO THE START OF AND DURING THE HANGING AND BRACING OF THE DISTRIBUTION SYSTEMS. THE STRUCTURAL ENGINEER OF RECORD SHALL VERIFY THE ADEQUACY OF THE STRUCTURE TO SUPPORT THE HANGER AND BRACE LOADS.

MECHANICAL PIPING (MP), MECHANICAL DUCTS (MD), PLUMBING PIPING (PP), ELECTRICAL DISTRIBUTION SYSTEMS (E):

MP☒ MD☒ PP☒ E☒ OPTION 1: DETAILED ON THE APPROVED DRAWINGS WITH PROJECT SPECIFIC NOTES AND DETAILS.

MP☐ MD☐ PP☐ E☐ OPTION 2: SHALL COMPLY WITH THE APPLICABLE OSHPD PRE-APPROVAL (OPM #) #_____.

NOT USED

NOT USED

NOT USED

BUILDING SIZE SCHEDULE

BUILDING SIZE (FT)	TOTAL # OF 12'-0" WIDE MODULES	TOTAL # OF CENTER MODULES	OVERALL BUILDING WIDTH[1]
☐ 24'x40'	2	0	23'-8½"
☐ 36'x40'	3	1	35'-6¾"
☐ 48'x40'	4	2	47'-5"
☐ 60'x40'	5	3	59'-3¼"
☐ 72'x40'	6	4	71'-1½"
☐ 84'x40'	7	5	82'-11¾"
☐ 96'x40'	8	6	94'-10"
☐ 108'x40'	9	7	106'-8¼"
☐ 120'x40'	10	8	118'-6½"

NOTES:

1. TOTAL BUILDING WIDTH INCLUDES ¼" PER MODULE CONSTRUCTION TOLERANCE PER FOUNDATION SHEETS S1.0, S1.1, S1.2, & S1.3

BUILDING SIZE SCHEDULE

MEP COMPONENT ANCHORAGE NOTES

IDENTIFICATION STAMP
DIV. OF THE STATE ARCHITECT
APP: 03-124589 INC:
REVIEWED FOR
SS ☑ FLS ☑ ACS ☑
DATE: 04/15/2025

American Modular Systems
787 Spreckels Ave., Manteca, CA 95336
Phone (209) 825-1921 Fax (209) 825-7018
www.americanmodular.com

INTELLECTUAL-PROPERTY & PROPRIETARY RIGHTS STATEMENT
COPYRIGHT © AMERICAN MODULAR SYSTEMS (AMS)
AMS OWNS ALL COPYRIGHT AND OTHER INTELLECTUAL-PROPERTY AND PROPRIETARY RIGHTS IN THESE DRAWINGS, SPECIFICATIONS, AND THE MATERIAL CONTAINED HEREIN. CERTAIN ELEMENTS SHOWN IN THESE DOCUMENTS ARE REGISTERED TRADEMARKS OF AMS. ALL PATENTABLE MATERIALS CONTAINED IN THESE DOCUMENTS AND ORIGINATING WITH AMS WILL REMAIN THE SOLE PROPERTY OF AMS. THESE DRAWINGS, SPECIFICATIONS, AND THE MATERIAL CONTAINED HEREIN MAY NOT BE REPRODUCED, TRANSMITTED, COPIED, DISTRIBUTED, MODIFIED, OR OTHERWISE DISPOSED OF (DIRECTLY OR INDIRECTLY) AND MAY NOT BE USED (IN WHOLE OR IN PART) TO ASSIST IN THE CONSTRUCTION, DESIGN, OR OTHER MAKING OF, OR FOR THE PURPOSE OF FURNISHING ANY INFORMATION FOR THE CONSTRUCTION, DESIGN, OR OTHER MAKING OF, ANY BUILDINGS (MODULAR OR OTHERWISE), DRAWINGS, SPECIFICATIONS, PRINTS, APPARATUS, OR PARTS THEREOF, EXCEPT AS EXPRESSLY PERMITTED BY WRITTEN CONSENT OF, OR IN A WRITTEN AGREEMENT WITH, AMS. SUBMITTAL OR DISTRIBUTION TO MEET OFFICIAL REGULATORY REQUIREMENTS WILL NOT BE CONSTRUED AS PUBLICATION IN DEROGATION OF AMS'S COPYRIGHT OR OTHER INTELLECTUAL-PROPERTY OR PROPRIETARY RIGHTS.

PRE-CHECKED SET NAME

24' x 40' THRU 120' x 40'
STANDARD MODULAR BUILDING
(HIGH SEISMIC)

FORM®

SITE SPECIFIC PROJECT NAME

APPROVED
DIV. OF THE STATE ARCHITECT
APP: 04-122051 PC
REVIEWED FOR
SS ☑ FLS ☑ ACS ☑ CG ☑
DATE: 04/03/2024

☐ 2022 CBC PRE-CHECK (PC) DOCUMENT
A SEPARATE PRE-REVIEW AND CATALOG OF CONSTRUCTION IS REQUIRED.

MANUFACTURER PROFESSIONAL OF RECORD ON PC

LICENSED ARCHITECT
PATRICK CRAWFORD MANGANO
No. C12631
Ren. 3-31-25
STATE OF CALIFORNIA

THESE DRAWINGS ARE PRELIMINARY AND NOT FOR CONSTRUCTION UNLESS STAMPED & SIGNED BY THE DESIGN PROFESSIONAL OF RECORD.

REVISIONS
1
2
3
4

DRAWN BY:	AA
SCALE:	AS NOTED
DATE:	MM/DD/YY
PROJECT NO:	XXXX-22

SHEET TITLE:
TYPICAL REFLECTED CEILING PLAN

SHEET NUMBER:
M1.0

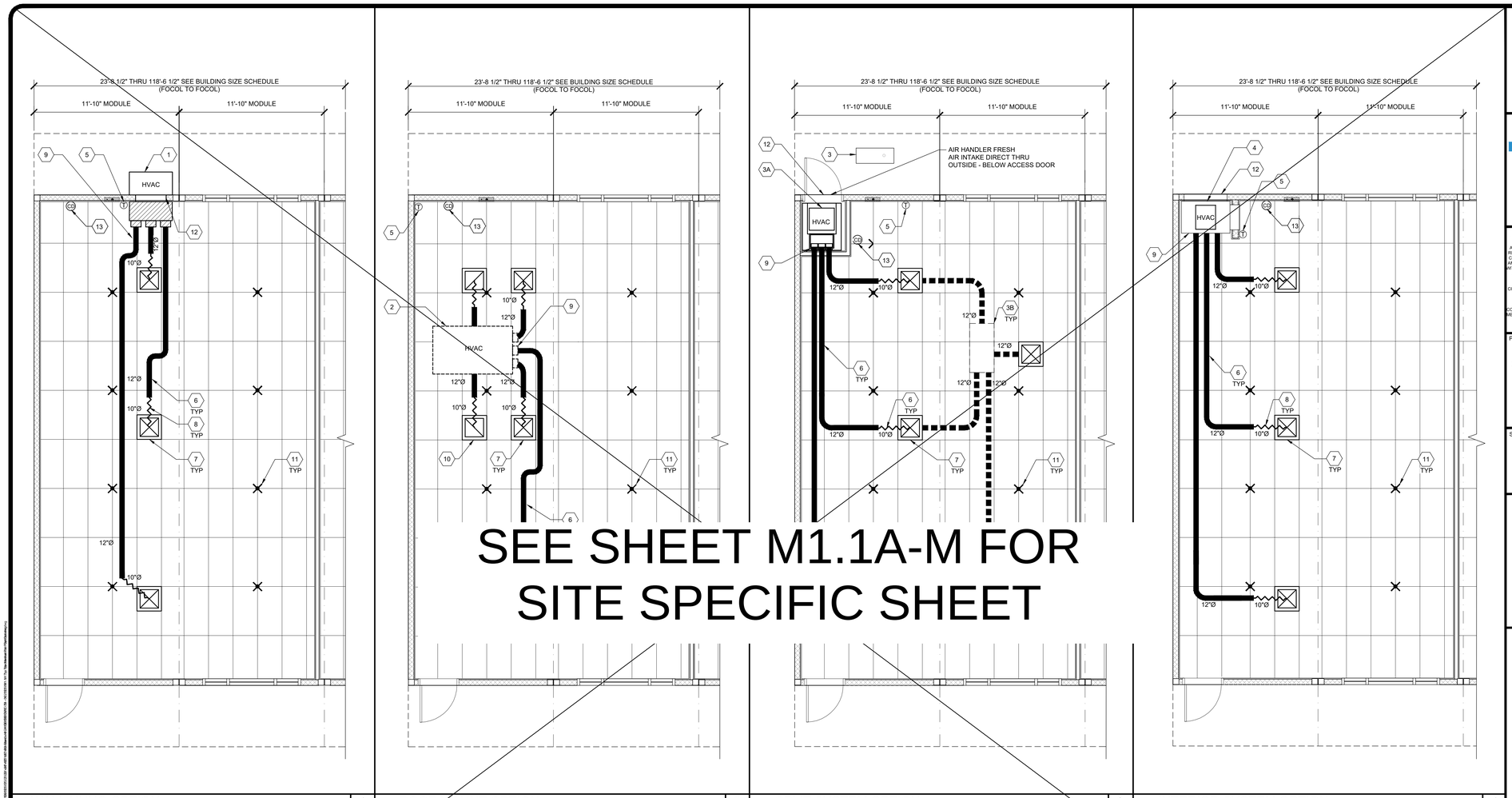

SEE SHEET M1.1A-M FOR
SITE SPECIFIC SHEET

WALL HUNG OPTION — SCALE: 1/4"=1'-0" — 1

ROOF MOUNT OPTION — SCALE: 1/4"=1'-0" — 2

SPLIT SYSTEM OPTION — SCALE: 1/4"=1'-0" — 3

INTERIOR SYSTEM OPTION — SCALE: 1/4"=1'-0" — 4

SHEET NOTES

1. WHERE TWO OR MORE HVAC UNITS SERVE A COMMON SPACE, UNITS SHALL BE EQUIPPED WITH A DUCT SMOKE DETECTOR FOR AUTOMATIC SHUTDOWN. INTERCONNECT WITH FIRE ALARM SYSTEM.
2. AIR-MOVING SYSTEMS SUPPLYING AIR IN EXCESS OF 2000 CUBIC FEET PER MINUTE TO ENCLOSED SPACES WITHIN THE BUILDING SHALL BE EQUIPPED WITH AN AUTOMATIC SHUTOFF.
3. AUTOMATIC SHUT-OFF IS NOT REQUIRED WHEN OCCUPIED ROOMS SERVED BY THE AIR HANDLING EQUIPMENT HAVE A DIRECT EXIT TO THE EXTERIOR AND THE TRAVEL DISTANCE DOES NOT EXCEED 100 FT. (PER C.M.C. 608.1 EXCEPTION #2.)
4. LIGHTING FIXTURE MAY BE INSTALLED ROTATED 90° FROM SHOWN TO MATCH T-GRID.
5. FOR T-BAR CEILING SPECIFICATIONS, SEE M1.7.
6. PROVIDE CO2 SENSORS AT ALL CLASSROOMS THAT MEET REQUIREMENTS OF CALGREEN 5.506.
6. EACH PUBLIC K-12 SCHOOL CLASSROOM, AS LISTED IN TABLE 120.1-A OF THE CALIFORNIA ENERGY CODE, SHALL BE EQUIPPED WITH A CARBON DIOXIDE MONITOR OR SENSOR THAT MEETS THE FOLLOWING REQUIREMENTS:
   1. THE MONITOR OR SENSOR SHALL BE PERMANENTLY AFFIXED IN A TAMPER-PROOF MANNER IN EACH CLASSROOM BETWEEN 3 AND 6 FEET (914 MM AND 1829 MM) ABOVE THE FLOOR AND AT LEAST 5 FEET (1524 MM) AWAY FROM DOORS AND OPERABLE WINDOWS.
   2. WHEN THE MONITOR OR SENSOR IS NOT INTEGRAL TO AN ENERGY MANAGEMENT CONTROL SYSTEM (EMCS), THE MONITOR OR SENSOR SHALL DISPLAY THE CARBON DIOXIDE READINGS ON THE DEVICE. WHEN THE SENSOR IS INTEGRAL TO AN EMCS, THE CARBON DIOXIDE READINGS SHALL BE AVAILABLE TO AND REGULARLY MONITORED BY FACILITY PERSONNEL.
   3. A MONITOR SHALL PROVIDE NOTIFICATION THROUGH A VISUAL INDICATOR ON THE MONITOR WHEN THE CARBON DIOXIDE LEVELS IN THE CLASSROOM HAVE EXCEEDED 1,100 PPM. A SENSOR INTEGRAL TO AN EMCS SHALL PROVIDE NOTIFICATION TO FACILITY PERSONNEL THROUGH A VISUAL AND/OR AUDIBLE INDICATOR WHEN THE CARBON DIOXIDE LEVELS IN THE CLASSROOM HAVE EXCEEDED 1,100 PPM.
   4. THE MONITOR OR SENSOR SHALL MEASURE CARBON DIOXIDE LEVELS AT MINIMUM 15-MINUTE INTERVALS AND SHALL MAINTAIN A RECORD OF PREVIOUS CARBON DIOXIDE MEASUREMENTS OF NOT LESS THAN 30 DAYS DURATION.
   5. THE MONITOR OR SENSOR USED TO MEASURE CARBON DIOXIDE LEVELS SHALL HAVE THE CAPACITY TO MEASURE CARBON DIOXIDE LEVELS WITH A RANGE OF 400 PPM TO 2000 PPM OR GREATER.
   6. THE MONITOR OR SENSOR SHALL BE CERTIFIED BY THE MANUFACTURER TO BE ACCURATE WITHIN 75 PPM AT 1,000 PPM CARBON DIOXIDE CONCENTRATION AND SHALL BE CERTIFIED BY THE MANUFACTURER TO R EQUIRE CALIBRATION NO MORE FREQUENTLY THAN ONCE EVERY 5 YEARS.
7. PER ENERGY CODE 120.1(D): THERMOSTAT SHALL BE PROGRAMMED SO THAT THE AIR HANDLER FAN WILL RUN CONTINUALLY DURING OCCUPIED TIMES. PRE-OCCUPANCY PURGE SHALL BE PROGRAMED ONE HOUR PRIOR TO THE MODULAR BUILDING BEING NORMALLY OCCUPIED. SHOW THERMOSTAT PLACEMENT ON THE PLANS TO BE PLACED AWAY FROM DOORS AND OPERABLE WINDOWS. MECHANICAL PLANS SHOW THERMOSTAT AND SENSOR LOCATIONS, CONTROL DEVICES, AND INCLUDE A CONTROL SEQUENCE OF OPERATIONS. MANUAL OVERRIDE CONTROLS ARE A MANDATORY MEASURE UNDER ENERGY CODE SECTION 120.2(E). ALL HVAC SYSTEMS SHALL HAVE A MANUAL OVERRIDE ACCESSIBLE TO THE OCCUPANTS THAT ALLOWS THEM TO TURN ON THE HVAC SYSTEM DURING NORMALLY UNOCCUPIED TIMES. THIS CAN BE A MANUAL OVERRIDE FOR UP TO 4 HOURS, OCCUPANCY SENSOR OR A 4 HOUR MANUALLY OPERATED TIMER.

KEY NOTES

1. WALL HUNG HVAC UNIT - SEE 10/M1.4.
2. ROOF MOUNT UNIT - SEE 11/M1.4.
3. CONDENSER - GROUND MOUNT BY OTHERS.
3A. AIR HANDLER UNIT (IN ROOM) - SEE 1/M1.5.
3B. AIR HANDLER UNIT (ABOVE CEILING) - SEE DETAIL 3/M1.5. INSTALL FRESH AIR INTAKE THRU ROOF INTAKE, PENETRATION PER 2/M1.6 SIM.
4. INTERIOR HVAC SYSTEM - SEE 9/M1.4.
5. THERMOSTAT - 48" A.F.F, MAX TO TOP OF BOX
6. CONCEALED SUPPLY AIR DUCT ABOVE T-BAR CEILING - SEE 1/M1.4.
7. TYPICAL 4-WAY SUPPLY AIR REGISTER LOCATION AND SIZE MAY VARY PER CEILING LAYOUT AND BUILDING SIZE - SEE 7/M1.5.
8. FLEX DUCT - NOMINAL 10" MIN. (MAY VARY) - SEE 8/M1.5.
9. RETURN AIR AS PART OF UNIT.
10. RETURN AIR REGISTER - SEE 7/M1.5.
11. STRUT/SPLAY WIRE ASSEMBLY, SEE 5/M1.4 FOR DETAILS
12. HVAC EXTERIOR AIR VENT (SPLIT SYSTEM EXTERIOR AIR VENT FRAMED SEPARATELY FROM DOOR)
13. CARBON DIOXIDE MONITOR (SEE NOTE #6 SHEET NOTES)

NOTE: FLEXIBLE AIR DUCTS AND CONNECTORS SHALL BE NOT MORE THAN 5 FEET IN LENGTH AND SHALL NOT BE USED IN LIEU OF RIGID ELBOWS OR FITTINGS. FLEXIBLE AIR DUCTS SHALL BE PERMITTED TO BE USED AS AN ELBOW AT A TERMINAL DEVICE PER ENERGY CODE 120.4 AND CMC 603.4.1

BUILDING SIZE SCHEDULE

BUILDING SIZE (FT)	TOTAL # OF 12'-0" WIDE MODULES	TOTAL # OF CENTER MODULES	OVERALL BUILDING WIDTH[1]
24'x40'	2	0	23'-8½"
36'x40'	3	1	35'-6¾"
48'x40'	4	2	47'-5"
60'x40'	5	3	59'-3¼"
72'x40'	6	4	71'-1½"
84'x40'	7	5	82'-11¾"
96'x40'	8	6	94'-10"
108'x40'	9	7	106'-8¼"
120'x40'	10	8	118'-6½"

NOTES:

1. TOTAL BUILDING WIDTH INCLUDES ½" PER MODULE CONSTRUCTION TOLERANCE PER FOUNDATION SHEETS S1.0, S1.1, S1.2, & S1.3.
2. REFER TO SHEET M1.7 FOR TYPICAL NOTES AND CALL OUTS.

IDENTIFICATION STAMP
DIV. OF THE STATE ARCHITECT
APP: 03-124589 INC:
REVIEWED FOR
SS ☑ FLS ☑ ACS ☑
DATE: 04/15/2025

American Modular Systems
787 Spreckels Ave., Manteca, CA 95336
Phone (209) 825-1921 Fax (209) 825-7018
www.americanmodular.com

INTELLECTUAL-PROPERTY & PROPRIETARY RIGHTS STATEMENT
COPYRIGHT © AMERICAN MODULAR SYSTEMS (AMS)
AMS OWNS ALL COPYRIGHT AND OTHER INTELLECTUAL-PROPERTY AND PROPRIETARY RIGHTS IN THESE DOCUMENTS. COPYRIGHT NOTICES MAY APPEAR ELSEWHERE HEREIN. CERTAIN ELEMENTS SHOWN IN THESE DOCUMENTS ARE REGISTERED TRADEMARKS OF AMS. ALL PATENTABLE MATERIALS CONTAINED IN THESE DOCUMENTS AND ORIGINATING WITH AMS WILL REMAIN THE SOLE PROPERTY OF AMS. THESE DRAWING, SPECIFICATIONS AND THE MATERIAL CONTAINED HEREIN MAY NOT BE REPRODUCED, TRANSMITTED, COPIED, DISTRIBUTED, MODIFIED, OR OTHERWISE DISPOSED OF (DIRECTLY OR INDIRECTLY) AND MAY NOT BE USED (IN WHOLE OR IN PART) TO ASSIST IN THE CONSTRUCTION, DESIGN, OR OTHER MAKING OF, OR FOR THE PURPOSE OF FURNISHING ANY INFORMATION FOR THE CONSTRUCTION, DESIGN, OR OTHER MAKING OF, ANY BUILDINGS (MODULAR OR OTHERWISE), DRAWINGS, SPECIFICATIONS, PRINTS, APPARATUS, OR PARTS THEREOF, EXCEPT AS EXPRESSLY PERMITTED BY WRITTEN CONSENT OF, OR IN A WRITTEN AGREEMENT WITH, AMS. SUBMITTAL OR DISTRIBUTION TO MEET OFFICIAL REGULATORY REQUIREMENTS WILL NOT BE CONSTRUED AS PUBLICATION IN DEROGATION OF AMS'S COPYRIGHT OR OTHER INTELLECTUAL-PROPERTY OR PROPRIETARY RIGHTS.

PRE-CHECKED SET NAME
24' x 40' THRU 120' x 40'
STANDARD MODULAR BUILDING
(HIGH SEISMIC)
FORM®

SITE SPECIFIC PROJECT NAME

APPROVED
DIV. OF THE STATE ARCHITECT
APP: 04-122051 PC
REVIEWED FOR
SS ☑ FLS ☑ ACS ☑ CG ☑
DATE: 04/03/2024

☐ 2022 CBC PRE-CHECK (PC) DOCUMENT
A SEPARATE PRELIMINARY APPLICATION FOR CONSTRUCTION IS REQUIRED

MANUFACTURER PROFESSIONAL OF RECORD ON PC

LICENSED ARCHITECT
PATRICK O'MALLEY
No. C12631
Ren. 3-31-25
STATE OF CALIFORNIA

THESE DRAWINGS ARE PRELIMINARY AND NOT FOR CONSTRUCTION UNLESS STAMPED & SIGNED BY THE DESIGN PROFESSIONAL OF RECORD.

REVISIONS
1
2
3
4

DRAWN BY:	AA
SCALE:	AS NOTED
DATE:	MM/DD/YY
PROJECT NO:	XXXX-22

SHEET TITLE:
TYPICAL MECHANICAL PLAN OPTIONS

SHEET NUMBER:
M1.1A

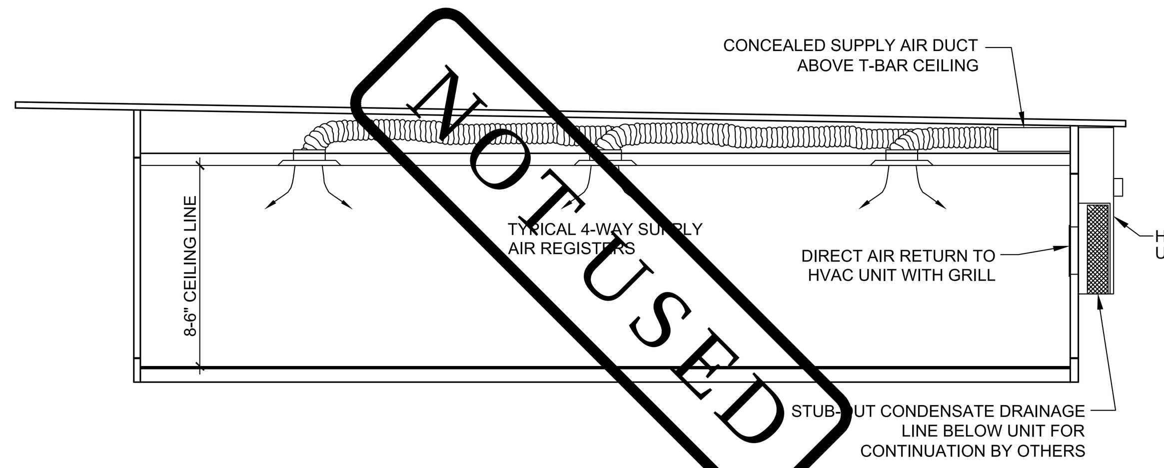

TYPICAL MECHANICAL SECTION
SCALE: 3/16" = 1'-0" | 1

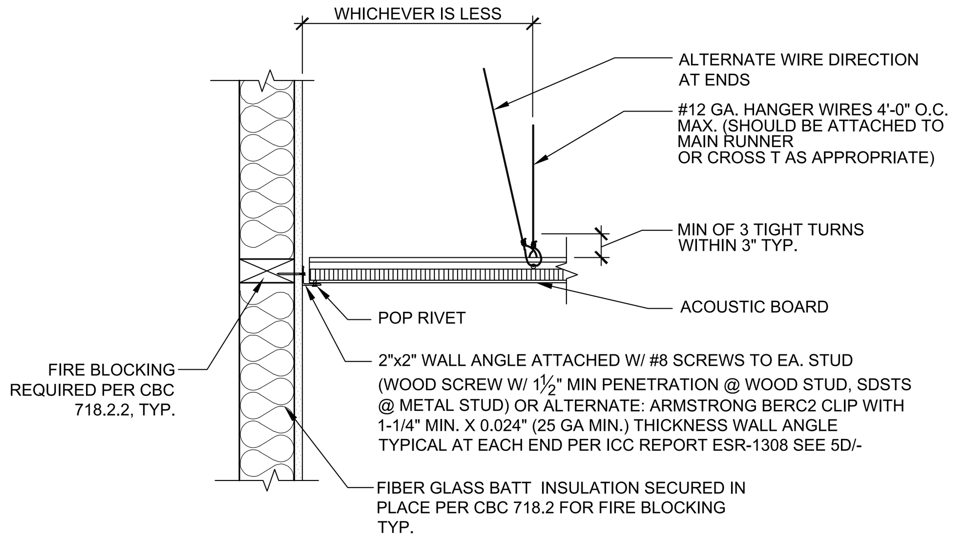

(A) FIXED END

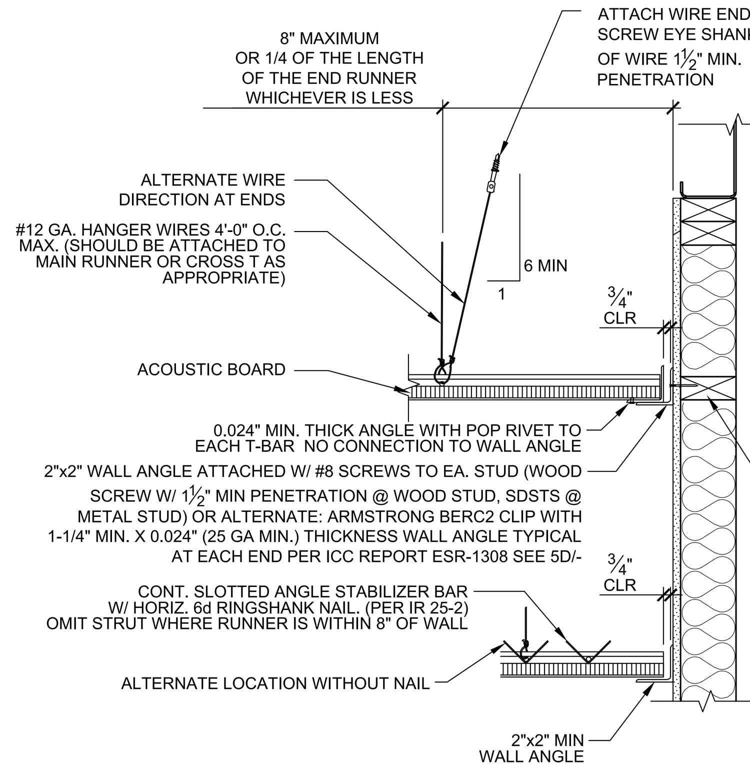

NOTE:
NAILS AT THE END OF HORIZONTAL STRUTS ARE TO BE PLACED WITH NAIL HEAD TOWARD CENTERLINE OF SPAN OF STRUT.

(B) FREE END

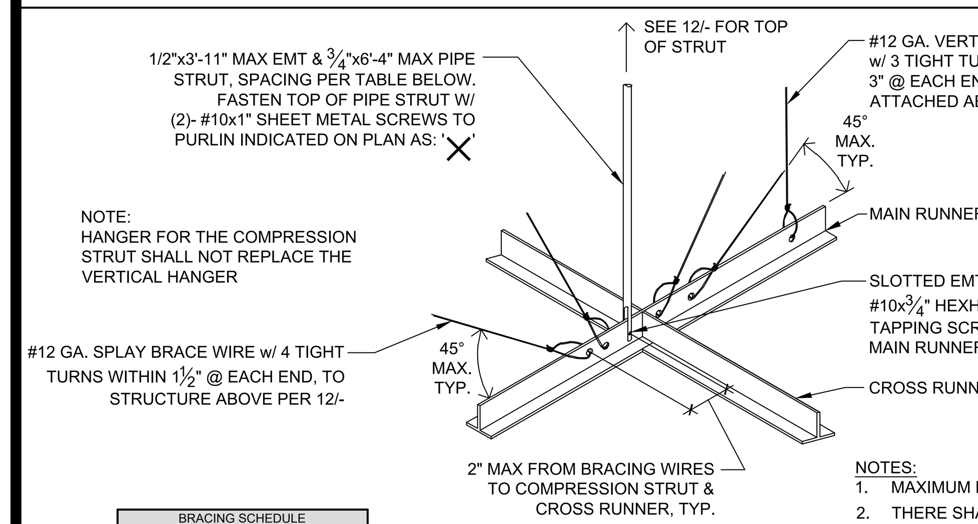

NOTE:
HANGER FOR THE COMPRESSION STRUT SHALL NOT REPLACE THE VERTICAL HANGER

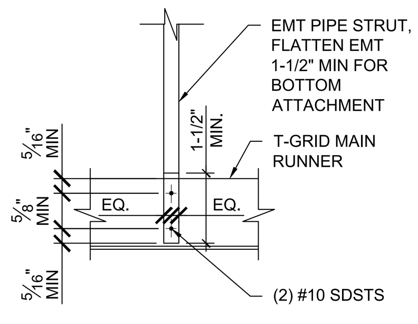

BRACING SCHEDULE	
SITE SPECIFIC S_{DS} (PER SHEET TS)	MAX. SPACING
☐ $S_{DS} \le 1.15$	12'x12'
☒ $1.15 \le S_{DS} \le 1.73$	8'x12'
☐ $S_{DS} > 1.73$	8'x8'

NOTES:
1. MAXIMUM BRACE SPACING SHALL BE PER ADJACENT SCHEDULE.
2. THERE SHALL BE A BRACE ASSEMBLY A DISTANCE OF NOT MORE THAN ONE HALF OF THE ABOVE SPACING FROM EACH SURROUNDING WALL, EXPANSION JOINT AND AT THE EDGES OF ANY CEILING VERTICAL OFFSET. FOR EXAMPLE, WHERE THE BRACE SPACING IS 8'x12", THE DISTANCE SHALL BE 4 FEET IN THE DIRECTION OF THE 8 FOOT SPACING AND 6 FEET IN THE DIRECTION OF THE 12 FOOT SPACING. FOR FURTHER INFORMATION REFER TO SPECIFICATIONS ON SHEET M1.7.

STRUT/SPLAY WIRE ASSEMBLY DETAIL
NOT TO SCALE | 2

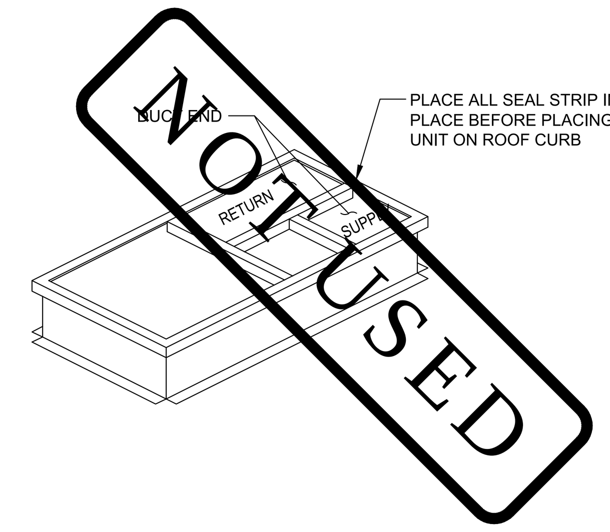

ROOF CURB SEAL DETAIL
SCALE : N.T.S. | 4

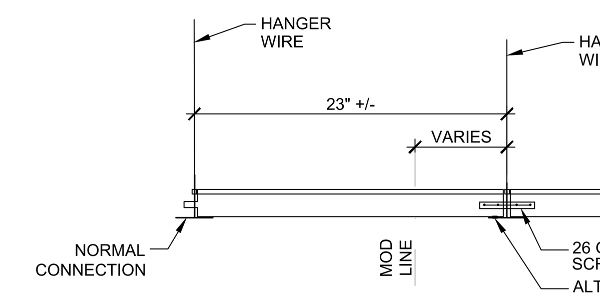

(C) RUNNER SPLICE AND CEILING CONNECTION @ MODULE LINE

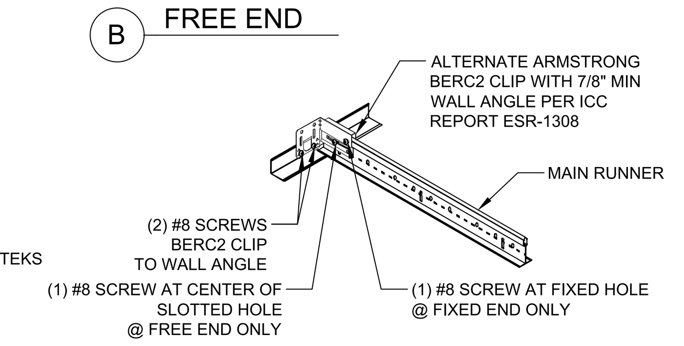

(D) ALTERNATE BERC2 CLIP DETAIL

SUSPENDED CEILING ATTACHMENT DETAILS
SCALE: 1-1/2" = 1'-0" | 5

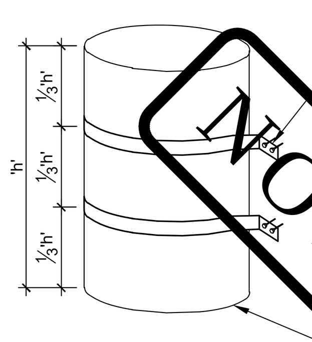

~~SECURE WATER HEATER w/ (2)- 22 GA. S.M. STRAP x1½" WIDE w/ (2)- #12 MIN. x3" HEX-HEAD WOOD SCREWS w/ WASHERS AT EACH END TO A STUD OR SOLID BLOCKING AT WOOD STUD WALLS (1½" MIN PENETRATION INTO WOOD FRAMING) OR AT METAL STUDS WALLS: (2) #12 MIN. SDSTS AT EACH END TO A STUD OR SOLID BLOCKING.~~

~~FLOOR MOUNTED WATER HEATER PROVIDE BLOCKING UNDER WATER HEATER PER DETAIL 5/S3.0 @ PLYWOOD FLOORS.~~ NO ADDITIONAL FLOOR SUPPORT REQUIRED @ CONCRETE FLOORS

MAX WATER HEATER WEIGHT = 400 LBS

NOTE: PRESSURE RELIEF VALVE SHALL BE PLUMBED TO OUTSIDE/EXTERIOR OF BUILDING.

WATER HEATER STRAP DETAIL
NOT TO SCALE | 6

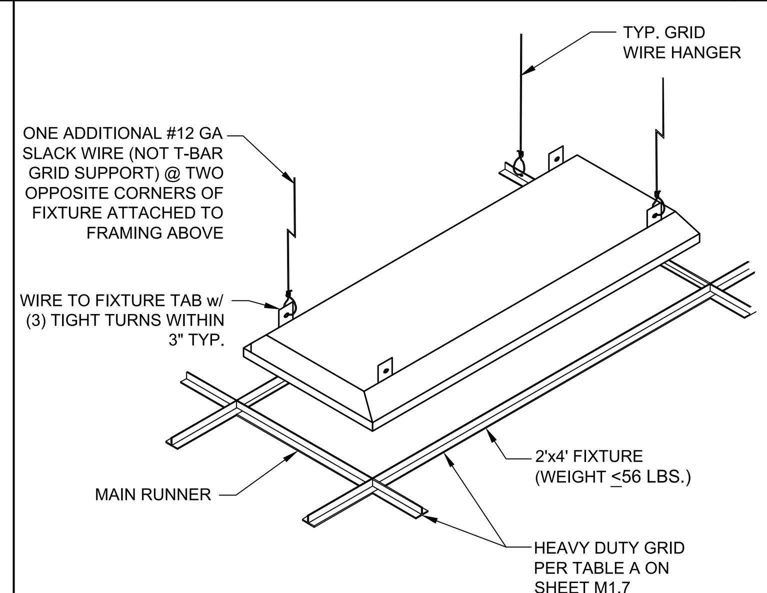

PROVIDE (1) #8x¾" SMS THRU GRID TO LIGHT FIXTURE @ 2 MIN. CORNERS

LIGHT FIXTURE ATTACHMENT
NOT TO SCALE | 7

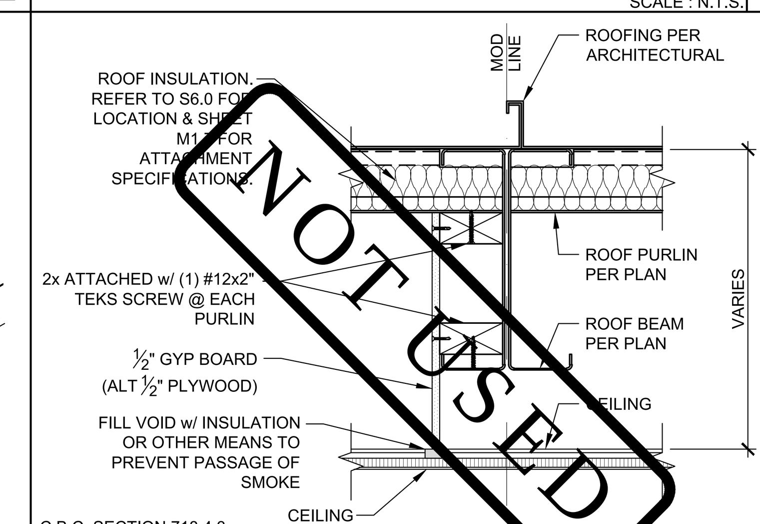

C.B.C. SECTION 718.4.3:
"DRAFTSTOPPING SHALL BE INSTALLED IN ATTICS AND CONCEALED ROOF SPACES, SUCH THAT ANY HORIZONTAL AREA DOES NOT EXCEED 3,000 SQUARE FEET."
NOTE EXCEPTION #2:
IN GROUP A, E, H, I, L OCCUPANCIES, WHERE AN AUTOMATIC SPRINKLER SYSTEM IN ACCORDANCE WITH SECTION 903.3.1.1 IS INSTALLED, THE AREA BETWEEN DRAFT STOPS MAY BE 9,000 SQUARE FEET AND THE GREATEST HORIZONTAL DISTANCE MAY BE 100 FEET.

CEILING DRAFT STOP DETAIL
SCALE: 1-1/2" = 1'-0" | 8

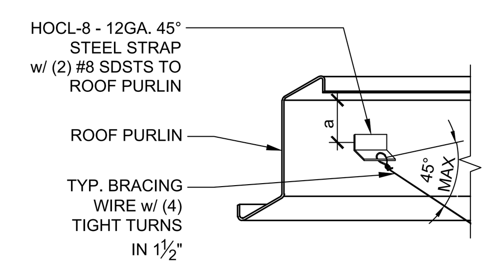

1:6 MAX. FOR TYPICAL HANGER WIRE
45° MAX. FROM HORIZ. FOR SPLAY BRACING
& FOR SLACK BRACING OF FIXTURES & REGISTERS

AT STEEL JOIST OR RAFTER

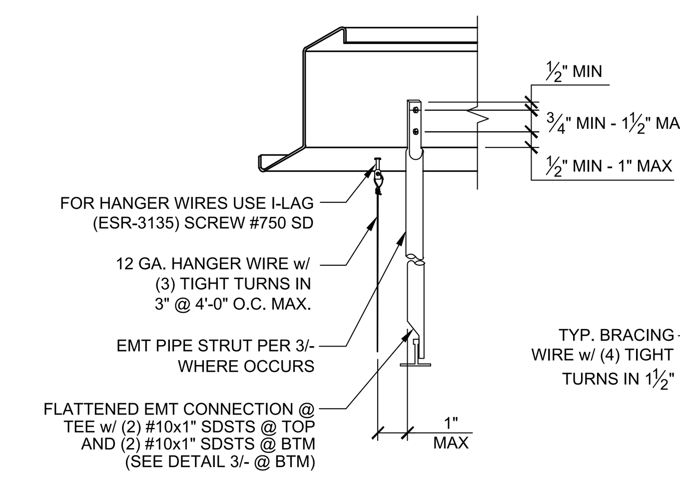

TO BOTTOM OF WEB OF JOIST OR RAFTER

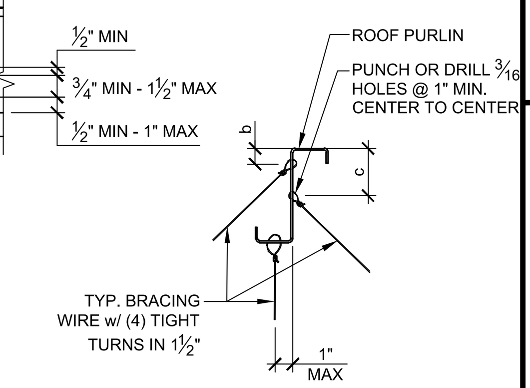

ALTERNATE WIRE CONNECTIONS

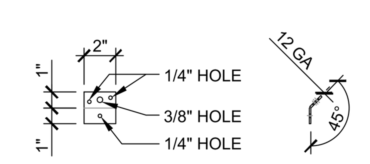

DOC'S INDUSTRIES INC
PART NUMBER: HOCL-8 - 12 GA GENERAL PURPOSE 45 DEGREE ANGLE CLIP WITH:
(1) ⅜" HOLE AND (3) ¼" HOLES OR EQUAL
MATERIAL: MILD CARBON STEEL
FINISH: ELECTRO PLATED ZINC
COMPLIANCE: RoHS
WEIGHT: 0.35 EACH

HOCL-8 CLIP

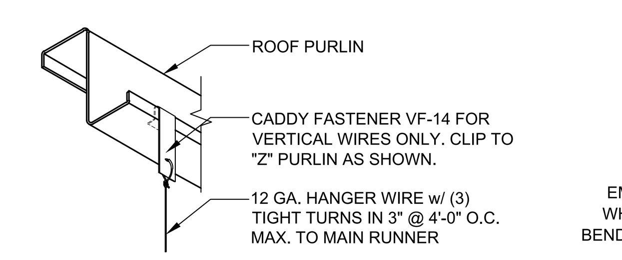

ALTERNATE WIRE CONNECTIONS

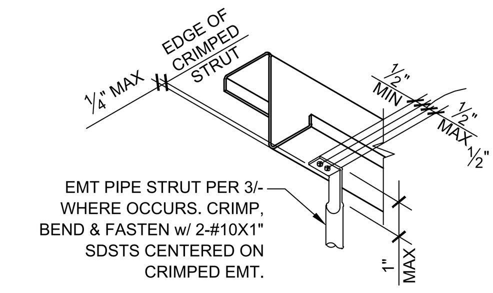

TO BOTTOM OF JOIST OR RAFTER

GENERAL DETAIL NOTES:
1. TYPICAL HANGER WIRES & VERTICAL STRUTS SHALL BE INSTALLED AT A MAXIMUM 1:6 ANGLE FROM VERTICAL.
2. TYPICAL SPLAY BRACING WIRES & WIRES FOR SLACK BRACING OF FIXTURES OR REGISTERS SHALL BE INSTALLED AT A MAXIMUM 45° ANGLE FROM THE SURFACE TO WHICH THEY ARE ATTACHED.

SUSPENDED CEILING TO PURLIN CONNECTION DETAILS
NOT TO SCALE | 12

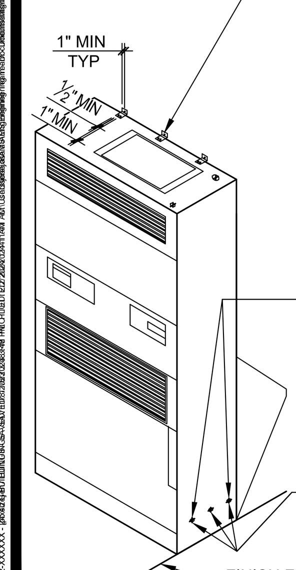

4"x2"x16ga x 3" WIDE CLIP ANGLE @ 16" O.C. MAX (3 CLIP ANGLES MIN) W/ (2) #10 SDSTS TO HVAC UNIT & (1) SCREW TO EXTERIOR WALL STUD OR BLOCKING AS FOLLOWS:

AT WOOD STUD WALLS:
(1) ¼"Ø LS OR #14 WOOD SCREW W/ 2" MIN PENETRATION INTO STUD OR BLKG.

AT METAL STUD WALLS:
(1) ¼"Ø SDSTS TO STUD OR BLOCKING

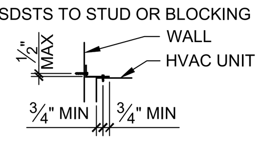

AT WOOD STUD WALLS:
(2) ¼"Ø LAG SCREWS OR #14 WOOD SCREWS w/ 2" MIN PENETRATION INTO STUD OR BLOCKING @ EACH SIDE TO SIDE WALL.

AT INTERIOR METAL STUD WALLS:
(2) ¼"Ø SDSTS TO STUD OR BLOCKING @ EACH SIDE TO SIDE WALL.

AT EXTERIOR METAL STUD WALL W/ 1" RIGID INSULATION:
(3) ¼"Ø SDSTS TO STUD OR BLOCKING @ EACH SIDE TO SIDE WALL.

MAX HVAC UNIT WEIGHT = 950 LBS

INTERIOR HVAC ANCHORAGE
NOT TO SCALE | 9

MAX HVAC UNIT WEIGHT = 600 LBS

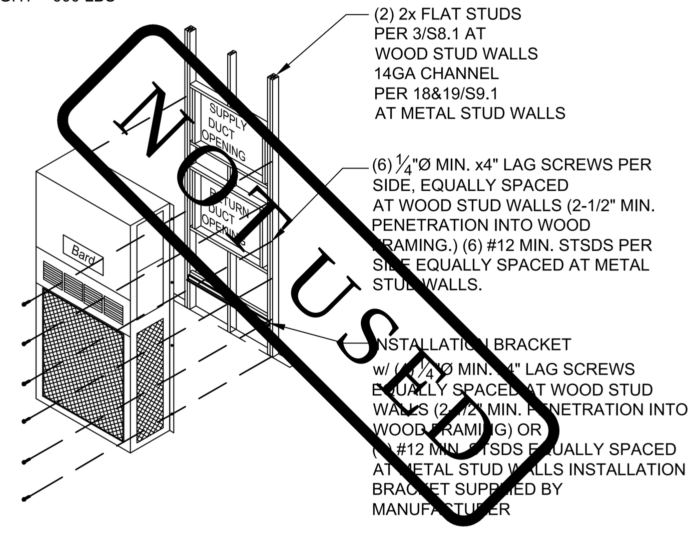

(2) 2x FLAT STUDS PER 3/S8.1 AT WOOD STUD WALLS 14GA CHANNEL PER 18&19/S9.1 AT METAL STUD WALLS

(6) ¼"Ø MIN. x4" LAG SCREWS PER SIDE, EQUALLY SPACED AT WOOD STUD WALLS (2-1/2" MIN. PENETRATION INTO WOOD FRAMING.) (6) #12 MIN. STSDS PER SIDE EQUALLY SPACED AT METAL STUD WALLS.

INSTALLATION BRACKET w/ (6) ¼"Ø MIN. x4" LAG SCREWS EQUALLY SPACED AT WOOD STUD WALLS (2-1/2" MIN. PENETRATION INTO WOOD FRAMING) OR (6) #12 MIN. STSDS EQUALLY SPACED AT METAL STUD WALLS INSTALLATION BRACKET SUPPLIED BY MANUFACTURER

WALL MOUNT HVAC ANCHORAGE
NOT TO SCALE | 10

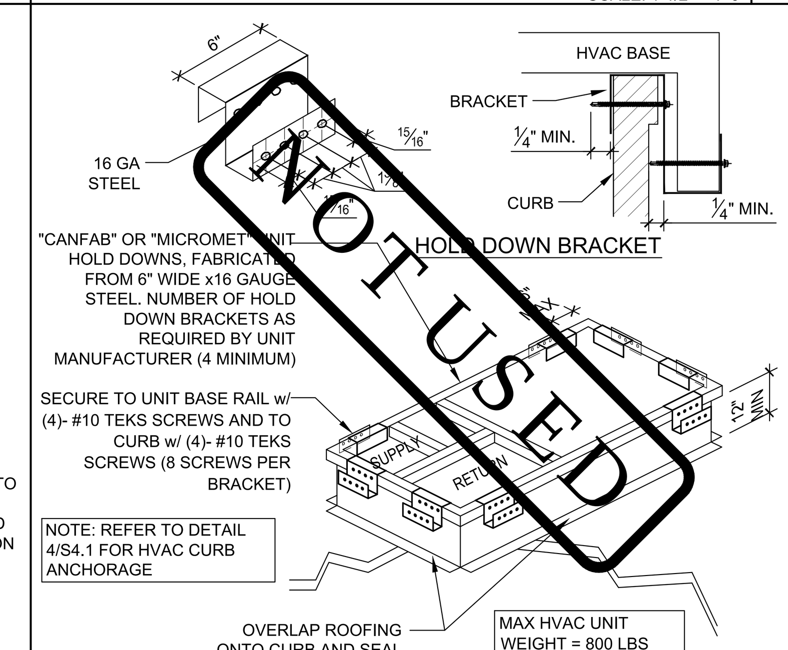

"CANFAB" OR "MICROMETL" UNIT HOLD DOWNS, FABRICATED FROM 6" WIDE x16 GAUGE STEEL. NUMBER OF HOLD DOWN BRACKETS AS REQUIRED BY UNIT MANUFACTURER (4 MINIMUM)

SECURE TO UNIT BASE RAIL w/ (4)- #10 TEKS SCREWS AND TO CURB w/ (4)- #10 TEKS SCREWS (8 SCREWS PER BRACKET)

NOTE: REFER TO DETAIL 4/S4.1 FOR HVAC CURB ANCHORAGE

OVERLAP ROOFING ONTO CURB AND SEAL

MAX HVAC UNIT WEIGHT = 800 LBS

OPTIONAL HVAC ROOF CURB
NOT TO SCALE | 11

IDENTIFICATION STAMP
DIV. OF THE STATE ARCHITECT
APP: 03-124589 INC:
REVIEWED FOR
SS ☑ FLS ☑ ACS ☑
DATE: 04/15/2025

American Modular Systems
787 Spreckels Ave., Manteca, CA 95336
Phone (209) 825-1921 Fax (209) 825-7018
www.americanmodular.com

INTELLECTUAL-PROPERTY & PROPRIETARY RIGHTS STATEMENT
COPYRIGHT © AMERICAN MODULAR SYSTEMS (AMS)
AMS OWNS ALL COPYRIGHT AND OTHER INTELLECTUAL-PROPERTY AND PROPRIETARY RIGHTS IN THESE DRAWINGS, SPECIFICATIONS, AND THE MATERIAL CONTAINED HEREIN. CERTAIN ELEMENTS SHOWN IN THESE DOCUMENTS ARE REGISTERED TRADEMARKS OF AMS. ALL PATENTABLE MATERIALS CONTAINED IN THESE DOCUMENTS AND ORIGINATING WITH AMS WILL REMAIN THE SOLE PROPERTY OF AMS. THESE DRAWING, SPECIFICATIONS, AND THE MATERIAL CONTAINED HEREIN MAY NOT BE REPRODUCED, TRANSMITTED, COPIED, DISTRIBUTED, MODIFIED, OR OTHERWISE DISPOSED OF (DIRECTLY OR INDIRECTLY) AND MAY NOT BE USED (IN WHOLE OR IN PART) TO ASSIST IN THE CONSTRUCTION, DESIGN, OR OTHER MAKING OF, OR FOR THE PURPOSE OF FURNISHING ANY INFORMATION FOR THE CONSTRUCTION, DESIGN, OR OTHER MAKING OF, ANY BUILDINGS (MODULAR OR OTHERWISE), DRAWINGS, SPECIFICATIONS, PRINTS, APPARATUS, OR PARTS THEREOF, EXCEPT AS EXPRESSLY PERMITTED BY WRITTEN CONSENT OF, OR IN A WRITTEN AGREEMENT WITH, AMS. SUBMITTAL OR DISTRIBUTION TO MEET OFFICIAL REGULATORY REQUIREMENTS WILL NOT BE CONSTRUED AS PUBLICATION IN DEROGATION OF AMS'S COPYRIGHT OR OTHER INTELLECTUAL-PROPERTY OR PROPRIETARY RIGHTS.

PRE-CHECKED SET NAME
24' x 40' THRU 120' x 40'
STANDARD MODULAR BUILDING
(HIGH SEISMIC)
FORM

SITE SPECIFIC PROJECT NAME
VENTURA COLLEGE
(1) 72'x40' BUILDING

APPROVED
DIV. OF THE STATE ARCHITECT
APP: 04-122051 PC
REVIEWED FOR
SS ☑ FLS ☑ ACS ☑ CG ☑
DATE: 04/03/2024

☒ 2022 CBC PRE-CHECK (PC) DOCUMENT
A SEPARATE PROJECT APPLICATION FOR CONSTRUCTION IS REQUIRED.

MANUFACTURER PROFESSIONAL OF RECORD ON PC

LICENSED ARCHITECT
RANDALL PATRICK CAVANAGH
No. C12631
Ren. 3-31-25
STATE OF CALIFORNIA

THESE DRAWINGS ARE PRELIMINARY AND NOT FOR CONSTRUCTION UNLESS STAMPED & SIGNED BY THE DESIGN PROFESSIONAL OF RECORD.

REVISIONS
1
2
3
4

DRAWN BY:	AA
SCALE:	AS NOTED
DATE:	MM/DD/YY
PROJECT NO:	XXXX-22

SHEET TITLE:
MECHANICAL AND CEILING DETAILS

SHEET NUMBER:
M1.4

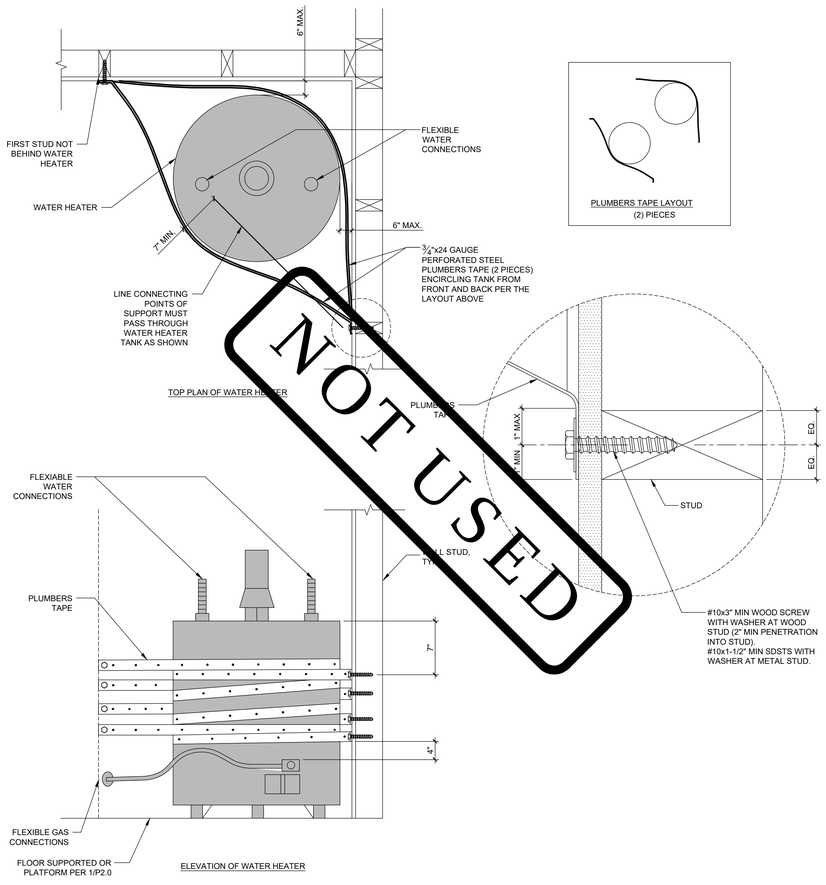

WATER HEATER CORNER BRACING DETAIL

SCALE: 1-1/2" = 1'-0" | 1

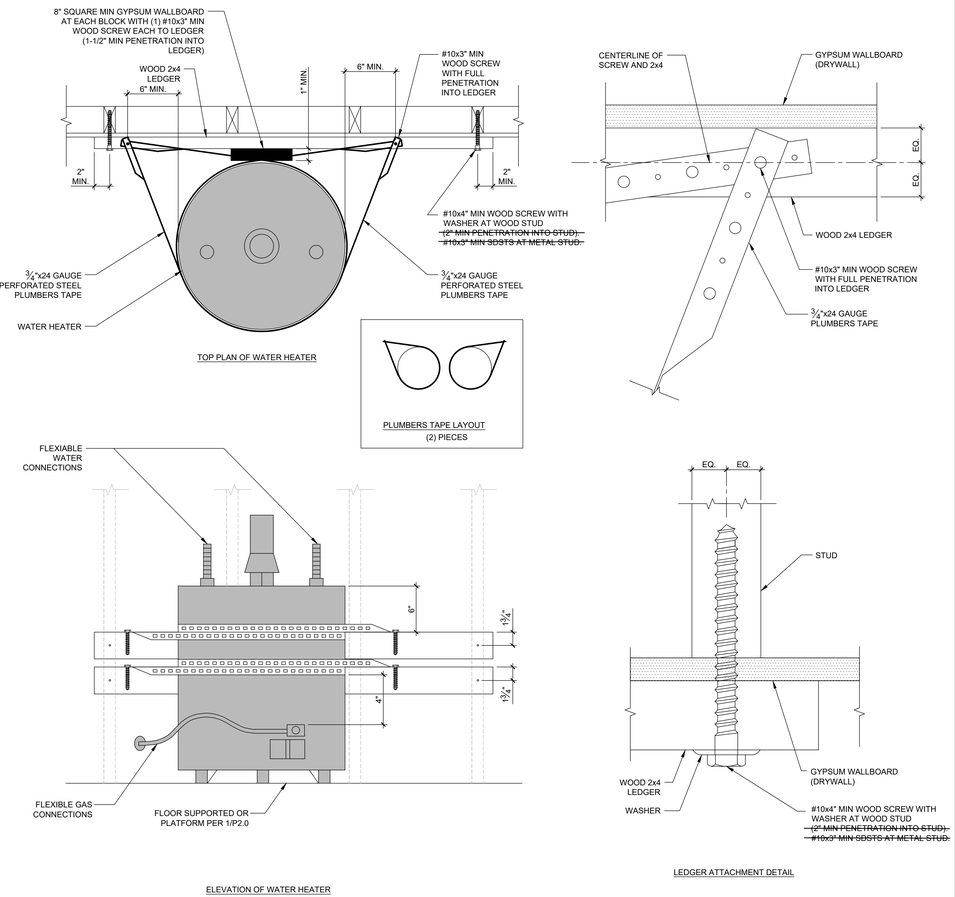

WATER HEATER MID-WALL BRACING DETAIL

SCALE: 1-1/2" = 1'-0" | 2

IDENTIFICATION STAMP
DIV. OF THE STATE ARCHITECT
APP: 03-124589 INC:
REVIEWED FOR
SS ☑ FLS ☑ ACS ☑
DATE: 04/15/2025

AMS®
American Modular Systems
787 Spreckels Ave., Manteca, CA 95336
Phone (209) 825-1921 Fax (209) 825-7018
www.americanmodular.com

INTELLECTUAL-PROPERTY & PROPRIETARY RIGHTS STATEMENT
COPYRIGHT © AMERICAN MODULAR SYSTEMS (AMS)
AMS OWNS ALL COPYRIGHT AND OTHER INTELLECTUAL-PROPERTY AND PROPRIETARY RIGHTS IN THESE DRAWINGS, SPECIFICATIONS, AND THE MATERIAL CONTAINED HEREIN. CERTAIN ELEMENTS SHOWN IN THESE DOCUMENTS ARE REGISTERED TRADEMARKS OF AMS. ALL PATENTABLE MATERIALS CONTAINED IN THESE DOCUMENTS AND ORIGINATING WITH AMS WILL REMAIN THE SOLE PROPERTY OF AMS. THE DRAWING, SPECIFICATIONS, AND THE MATERIAL CONTAINED HEREIN MAY NOT BE REPRODUCED, TRANSMITTED, COPIED, DISTRIBUTED, MODIFIED, OR OTHERWISE DISPOSED OF (DIRECTLY OR INDIRECTLY) AND MAY NOT BE USED (IN WHOLE OR IN PART) TO ASSIST IN THE CONSTRUCTION, DESIGN, OR OTHER MAKING OF, OR FOR THE PURPOSE OF FURNISHING ANY INFORMATION FOR THE CONSTRUCTION, DESIGN, OR OTHER MAKING OF, ANY BUILDINGS (MODULAR OR OTHERWISE), DRAWINGS, SPECIFICATIONS, PRINTS, APPARATUS, OR PARTS THEREOF, EXCEPT AS EXPRESSLY PERMITTED BY WRITTEN CONSENT OF, OR IN A WRITTEN AGREEMENT WITH, AMS. SUBMITTAL OR DISTRIBUTION TO MEET OFFICIAL REGULATORY REQUIREMENTS WILL NOT BE CONSTRUED AS PUBLICATION IN DEROGATION OF AMS'S COPYRIGHT OR OTHER INTELLECTUAL-PROPERTY OR PROPRIETARY RIGHTS.

PRE-CHECKED SET NAME

24' x 40' THRU 120' x 40'
STANDARD MODULAR BUILDING
(HIGH SEISMIC)

FORM®

SITE SPECIFIC PROJECT NAME

VENTURA COLLEGE
(1) 72'x40' BUILDING

APPROVED
DIV. OF THE STATE ARCHITECT
APP: 04-122051 PC
REVIEWED FOR
SS ☑ FLS ☑ ACS ☑ CG ☑
DATE: 04/03/2024

☒ 2022 CBC PRE-CHECK (PC) DOCUMENT
A SEPARATE PRE-REVIEW AND CONSTRUCTION PLAN REQUIRED

MANUFACTURER PROFESSIONAL OF RECORD ON PC

LICENSED ARCHITECT
PATRICK CLAY
No. C12631
Ren. 3-31-25
STATE OF CALIFORNIA

THESE DRAWINGS ARE PRELIMINARY AND NOT FOR CONSTRUCTION UNLESS STAMPED & SIGNED BY THE DESIGN PROFESSIONAL OF RECORD

REVISIONS

DRAWN BY:	AA
SCALE:	AS NOTED
DATE:	MM/DD/YY
PROJECT NO:	XXXX-22

SHEET TITLE:

MECHANICAL
AND CEILING
DETAILS

SHEET NUMBER:

M1.4A

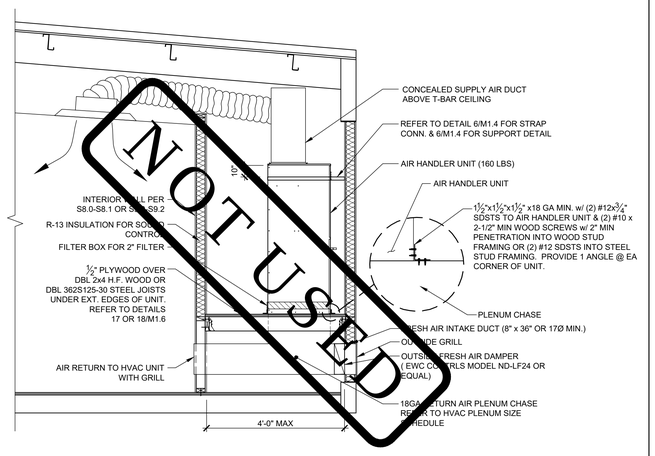

HVAC PLENUM SIZE SCHEDULE		
HVAC SIZE	MIN RETURN SIZE	MIN SUPPLY SIZE
3 TON	19½"x11"	19½"x11"
3 1/2" TON	19½"x12"	19½"x12"
4 TON	22½"x12"	22½"x12"
5 TON	22½"x14"	22½"x14"

NOTE: OUTSIDE AIR DUCT MUST INCLUDE A DAMPER THAT WILL FULLY CLOSE WHEN INDOOR FAN SHUTS DOWN PER SECTION 120.2(F).

SPLIT SYSTEM CROSS SECTION 1

SCALE: 1/2" = 1'-0"

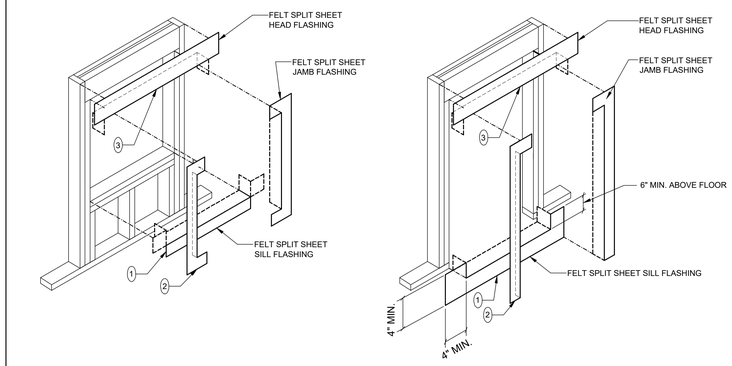

(#) = SEQUENCE OF ORDER

FLASHING @ WALL OPENINGS 2

NOT TO SCALE

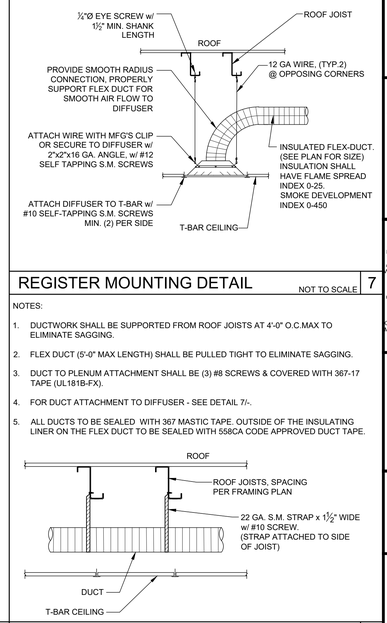

REGISTER MOUNTING DETAIL 7

NOT TO SCALE

NOTES:

1. DUCTWORK SHALL BE SUPPORTED FROM ROOF JOISTS AT 4'-0" O.C.MAX TO ELIMINATE SAGGING.
2. FLEX DUCT (5'-0" MAX LENGTH) SHALL BE PULLED TIGHT TO ELIMINATE SAGGING.
3. DUCT TO PLENUM ATTACHMENT SHALL BE (3) #8 SCREWS & COVERED WITH 367-17 TAPE (UL181B-FX).
4. FOR DUCT ATTACHMENT TO DIFFUSER - SEE DETAIL 7/-.
5. ALL DUCTS TO BE SEALED WITH 367 MASTIC TAPE. OUTSIDE OF THE INSULATING LINER ON THE FLEX DUCT TO BE SEALED WITH 558CA CODE APPROVED DUCT TAPE.

FLEX DUCTING SUPPORT DETAIL 8

NOT TO SCALE

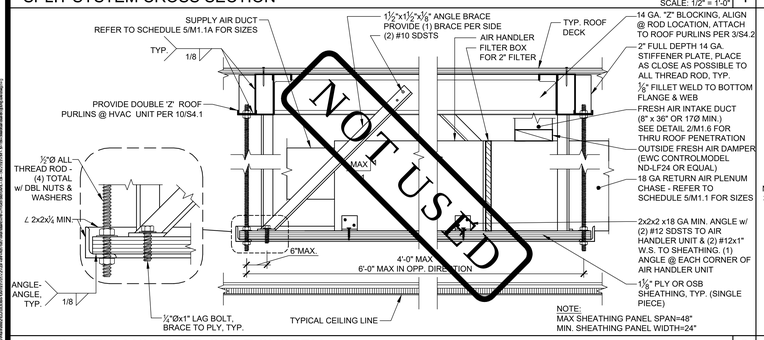

HVAC ATTIC MOUNTED SPLIT SYSTEM 3

NOT TO SCALE

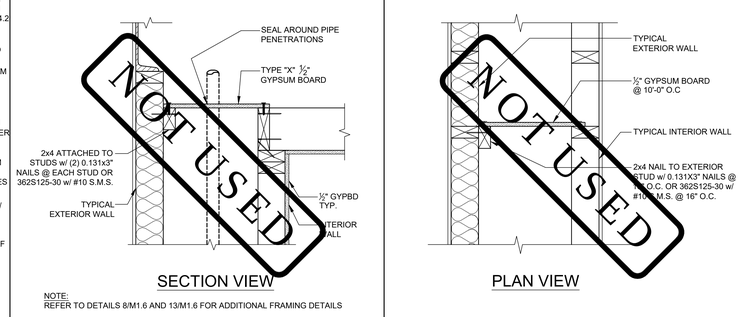

NOTE:
REFER TO DETAILS 8/M1.6 AND 13/M1.6 FOR ADDITIONAL FRAMING DETAILS

DRAFT STOP @ PLUMBING CHASE 4

SCALE: 1" = 1'-0"

DRAFT STOP @ PLUMBING CHASE 5

SCALE: 1" = 1'-0"

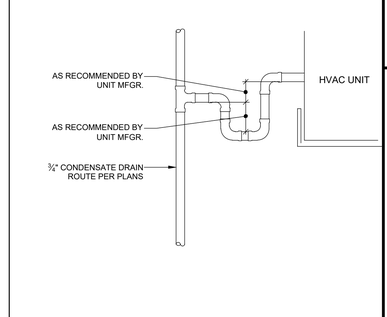

CONDENSATE DETAIL 9

NOT TO SCALE

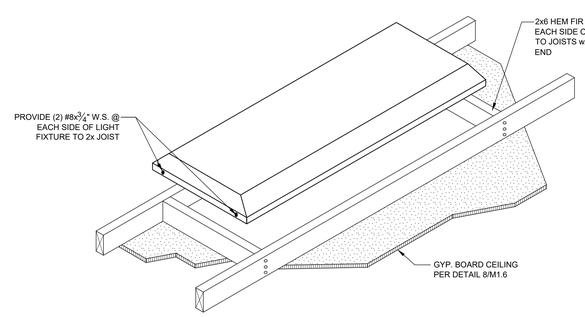

LIGHT FIXTURE ATTACHMENT DETAIL 6A

NOT TO SCALE

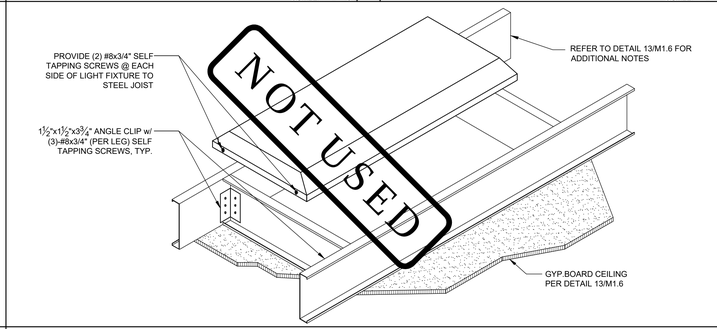

LIGHT FIXTURE ATTACHMENT DETAIL w /METAL STUDS 6B

NOT TO SCALE

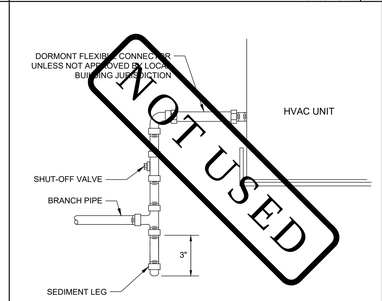

GAS CONNECTION DETAIL 10

NOT TO SCALE

IDENTIFICATION STAMP
DIV. OF THE STATE ARCHITECT
APP: 03-124589 INC:
REVIEWED FOR
SS ☑ FLS ☑ ACS ☑
DATE: 04/15/2025

AMS®
American Modular Systems
787 Spreckels Ave., Manteca, CA 95336
Phone (209) 825-1921 Fax (209) 825-7018
www.americanmodular.com

INTELLECTUAL-PROPERTY & PROPRIETARY RIGHTS STATEMENT
COPYRIGHT © AMERICAN MODULAR SYSTEMS (AMS)
AMS OWNS ALL COPYRIGHT AND OTHER INTELLECTUAL-PROPERTY AND PROPRIETARY RIGHTS IN THESE DRAWINGS, SPECIFICATIONS AND THE MATERIAL CONTAINED HEREIN. CERTAIN ELEMENTS SHOWN IN THESE DOCUMENTS ARE REGISTERED TRADEMARKS OF AMS. ALL PATENTABLE MATERIALS CONTAINED IN THESE DOCUMENTS AND ORIGINATING WITH AMS WILL REMAIN THE SOLE PROPERTY OF AMS. THESE DRAWING, SPECIFICATIONS AND THE MATERIAL CONTAINED HEREIN MAY NOT BE REPRODUCED, TRANSMITTED, COPIED, DISTRIBUTED, MODIFIED, OR OTHERWISE DISPOSED OF (DIRECTLY OR INDIRECTLY) AND MAY NOT BE USED (IN WHOLE OR IN PART) TO ASSIST IN THE CONSTRUCTION, DESIGN, OR OTHER MAKING OF, OR FOR THE PURPOSE OF FURNISHING ANY INFORMATION FOR THE CONSTRUCTION, DESIGN, OR OTHER MAKING OF, ANY BUILDINGS (MODULAR OR OTHERWISE), DRAWINGS, SPECIFICATIONS, PRINTS, APPARATUS, OR PARTS THEREOF, EXCEPT AS EXPRESSLY PERMITTED BY WRITTEN CONSENT OF, OR IN A WRITTEN AGREEMENT WITH, AMS. SUBMITTAL OR DISTRIBUTION TO MEET OFFICIAL REGULATORY REQUIREMENTS WILL NOT BE CONSTRUED AS PUBLICATION IN DEROGATION OF AMS'S COPYRIGHT OR OTHER INTELLECTUAL-PROPERTY OR PROPRIETARY RIGHTS.

PRE-CHECKED SET NAME

24' x 40' THRU 120' x 40'
STANDARD MODULAR BUILDING
(HIGH SEISMIC)

FORM®

SITE SPECIFIC PROJECT NAME

VENTURA COLLEGE
(1) 72'x40' BUILDING

APPROVED
DIV. OF THE STATE ARCHITECT
APP: 04-122051 PC
REVIEWED FOR
SS ☑ FLS ☑ ACS ☑ CG ☑
DATE: 04/03/2024

☒ 2022 CBC PRE-CHECK (PC) DOCUMENT
A SEPARATE PRE-REVIEW AND CLEARANCE FOR CONSTRUCTION IS REQUIRED.

MANUFACTURER PROFESSIONAL OF RECORD ON PC

LICENSED ARCHITECT PATRICK CRAIG MANGANO No. C12631 Ren. 3-31-25 STATE OF CALIFORNIA

THESE DRAWINGS ARE PRELIMINARY AND NOT FOR CONSTRUCTION UNLESS STAMPED & SIGNED BY THE DESIGN PROFESSIONAL OF RECORD.

REVISIONS

DRAWN BY:	AA
SCALE:	AS NOTED
DATE:	MM/DD/YY
PROJECT NO:	XXXX-22

SHEET TITLE:

MECHANICAL
& CEILING
DETAILS

SHEET NUMBER:

M1.5

NOT USED 1

NOT USED 2

NOT USED 3

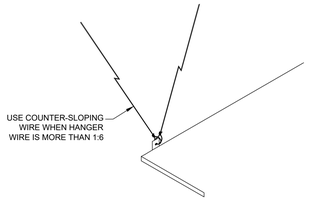

NOTE:
ONLY APPLICABLE FOR WIRES PROVIDING LATERAL BRACING FOR THE SUSPENDED CEILING SYSTEM. NOT ALLOWED FOR SPLAY WIRES.

COUNTERSLOPING WIRE 1-1/2" = 1'-0" 4

NOT USED 5

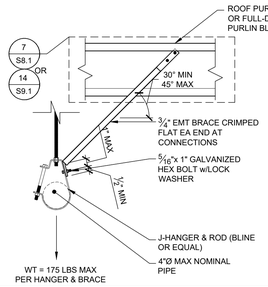

J-HANGER PIPE BRACE DETAIL (PERPENDICULAR) 1-1/2" = 1'-0" 6

EMT BRACE TO BE LOCATED 1'-0" MAX FROM END OF ROOF PURLIN (DOES NOT APPLY AT ROOF BLKG CONDITION

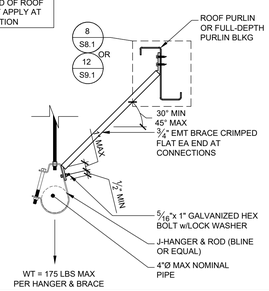

J-HANGER PIPE BRACE DETAIL (PARALLEL) 1-1/2" = 1'-0" 7

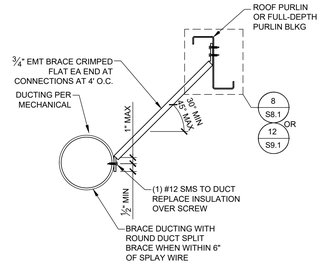

HVAC BRACE TO PURLIN ALTERNATE DETAIL 1-1/2" = 1'-0" 8

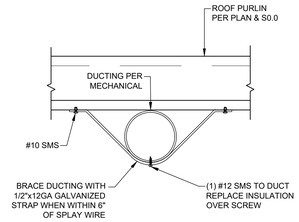

HVAC BRACE TO PURLIN PERPENDICULAR DETAIL 1-1/2" = 1'-0" 9

NOT USED 10

IDENTIFICATION STAMP
DIV. OF THE STATE ARCHITECT
APP: 03-124589 INC:
REVIEWED FOR
SS ☑ FLS ☑ ACS ☑
DATE: 04/15/2025

AMS®
American Modular Systems
787 Spreckels Ave., Manteca, CA 95336
Phone (209) 825-1921 Fax (209) 825-7018
www.americanmodular.com

INTELLECTUAL-PROPERTY & PROPRIETARY RIGHTS STATEMENT
COPYRIGHT © AMERICAN MODULAR SYSTEMS (AMS)
AMS OWNS ALL COPYRIGHT AND OTHER INTELLECTUAL-PROPERTY AND PROPRIETARY RIGHTS IN THESE DOCUMENTS. THE NAMES AND LOGOS OF AMS AND OTHER PRODUCTS HEREIN CERTAIN ELEMENTS SHOWN IN THESE DOCUMENTS ARE REGISTERED TRADEMARKS OF AMS. ALL PATENTABLE MATERIALS CONTAINED IN THESE DOCUMENTS AND ORIGINATING WITH AMS WILL REMAIN THE SOLE PROPERTY OF AMS. THESE DRAWING, SPECIFICATIONS AND THE MATERIAL CONTAINED HEREIN MAY NOT BE REPRODUCED, TRANSMITTED, COPIED, DISTRIBUTED, MODIFIED, OR OTHERWISE DISPOSED OF (DIRECTLY OR INDIRECTLY) AND MAY NOT BE USED (IN WHOLE OR IN PART) TO ASSIST IN THE CONSTRUCTION, DESIGN, OR OTHER MAKING OF, OR FOR THE PURPOSE OF FURNISHING ANY INFORMATION FOR THE CONSTRUCTION, DESIGN, OR OTHER MAKING OF, ANY BUILDINGS (MODULAR OR OTHERWISE), DRAWINGS, SPECIFICATIONS, PRINTS, APPARATUS, OR PARTS THEREOF, EXCEPT AS EXPRESSLY PERMITTED BY WRITTEN CONSENT OF, OR IN A WRITTEN AGREEMENT WITH, AMS. SUBMITTAL OR DISTRIBUTION TO MEET OFFICIAL REGULATORY REQUIREMENTS WILL NOT BE CONSTRUED AS PUBLICATION IN DEROGATION OF AMS'S COPYRIGHT OR OTHER INTELLECTUAL-PROPERTY OR PROPRIETARY RIGHTS.

PRE-CHECKED SET NAME
24' x 40' THRU 120' x 40'
STANDARD MODULAR BUILDING
(HIGH SEISMIC)
FORM®

SITE SPECIFIC PROJECT NAME
VENTURA COLLEGE
(1) 72'x40' BUILDING

APPROVED
DIV. OF THE STATE ARCHITECT
APP: 04-122051 PC
REVIEWED FOR
SS ☑ FLS ☑ ACS ☑ CG ☑
DATE: 04/03/2024

☒ 2022 CBC PRE-CHECK (PC) DOCUMENT
A SEPARATE PRE-SITE APPLICATION FOR CONSTRUCTION IS REQUIRED

MANUFACTURER PROFESSIONAL OF RECORD ON PC

LICENSED ARCHITECT
PATRICK CHANG
No. C12631
Ren. 3-31-25
STATE OF CALIFORNIA

THESE DRAWINGS ARE PRELIMINARY AND NOT FOR CONSTRUCTION UNLESS STAMPED & SIGNED BY THE DESIGN PROFESSIONAL OF RECORD.

REVISIONS
1
2
3
4

DRAWN BY:	AA
SCALE:	AS NOTED
DATE:	MM/DD/YY
PROJECT NO:	XXXX-22

SHEET TITLE:
CEILING & MECHANICAL DETAILS

SHEET NUMBER:
M1.5A

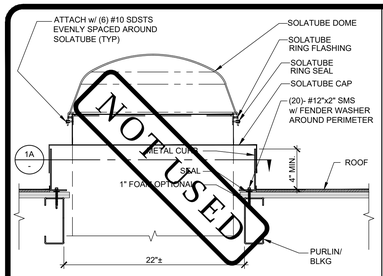

DOMED SKYLIGHTS SHALL COMPLY WITH C.B.C. SECTIONS 2405.5 & 2610, AND AAMA/WDMA/CSA 101/I.S./A440.

SOLATUBE ATTACHMENT DETAIL 1
SCALE: 1-1/2" = 1'-0"

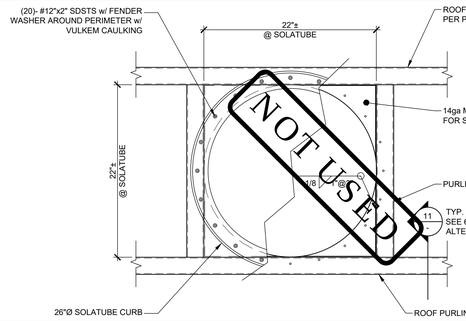

SOLATUBE CURB ATTACHMENT DETAIL 1A
SCALE: 1-1/2" = 1'-0"

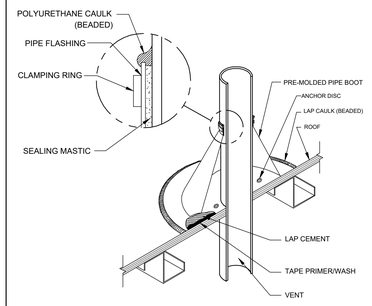

VENT THRU ROOF PENETRATION DETAIL 2
NOT TO SCALE

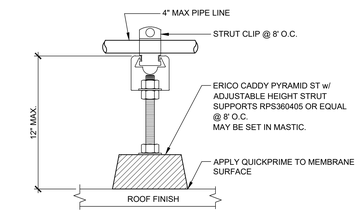

NOTE:
IF PIPE LINE SPANS GREATER THAN 16'-0" BETWEEN THE WALL SUPPORT AND THE HVAC UNIT, POSITIVE ATTACHMENT MUST BE PROVIDED BETWEEN THE BLOCK AND THE METAL ROOF

ROOF-TOP PIPE SUPPORT BLOCK 3
NOT TO SCALE

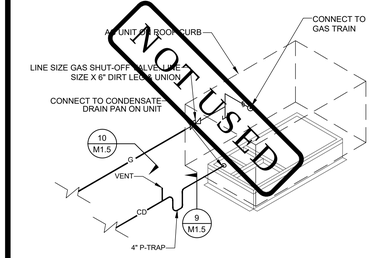

HVAC UNIT PIPING 4
NOT TO SCALE

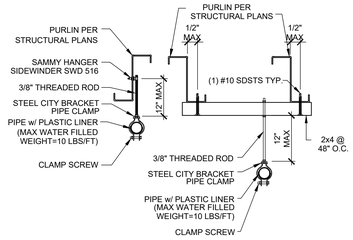

NOTES:
50 LBS MAXIMUM LOAD PER HANGER
100 LBS MAXIMUM LOAD PER ROOF PURLIN

PIPE HANGER DETAIL 5
SCALE: 1-1/2" = 1'-0"

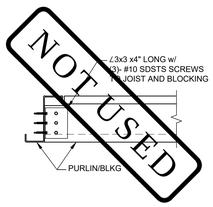

SOLATUBE SECTION (ALT. CLIP) 6
SCALE: 1-1/2" = 1'-0"

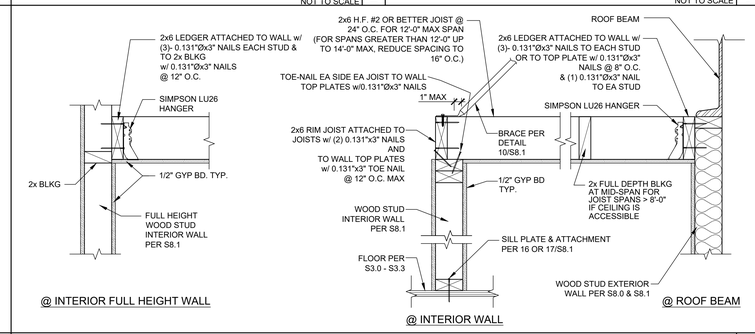

GYPSUM BOARD CEILING DETAIL w/ WOOD STUDS OPTION 8
SCALE: 1-1/2" = 1'-0"

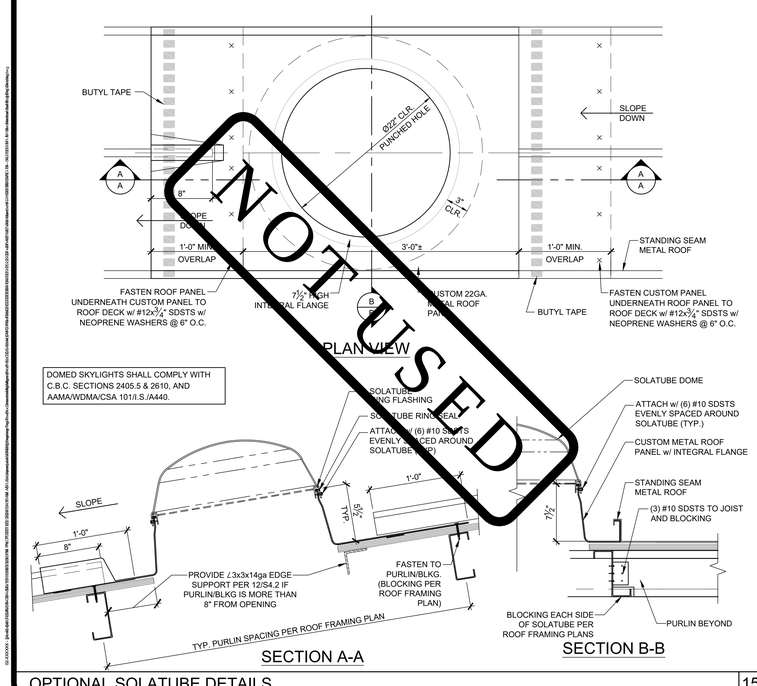

OPTIONAL SOLATUBE DETAILS 15
SCALE: 1-1/2" = 1'-0"

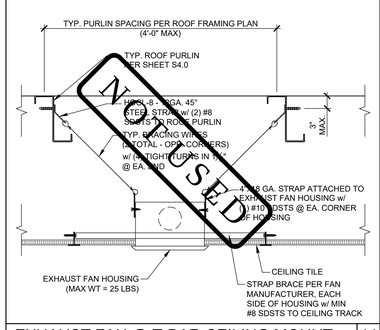

EXHAUST FAN @ T-BAR CEILING MOUNT 11

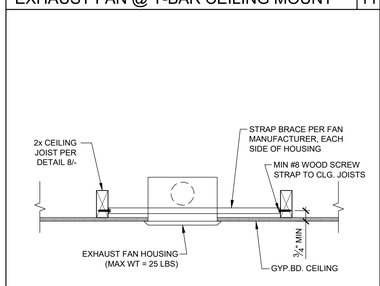

EXHAUST FAN @ GYP.BD. CEILING MOUNT 16

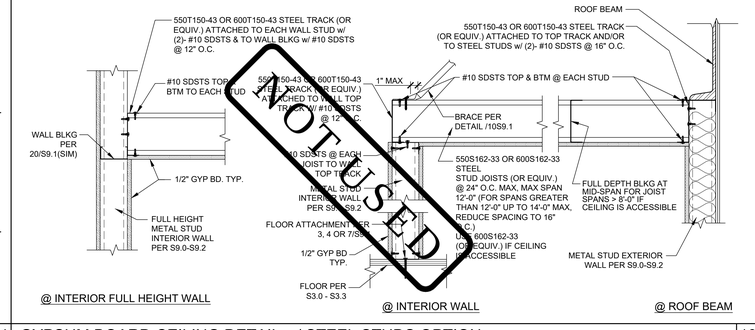

GYPSUM BOARD CEILING DETAIL w/ STEEL STUDS OPTION 13
SCALE: 1-1/2" = 1'-0"

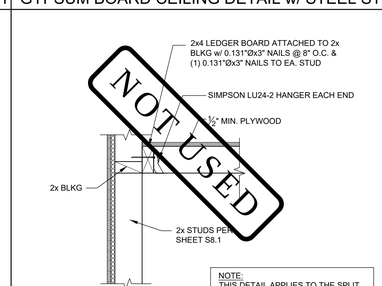

NOTE:
THIS DETAIL APPLIES TO THE SPLIT SYSTEM PLATFORM FRAMING PER DETAIL 1/M1.5 ONLY.

DETAIL @ WOOD STUD OPTION 17
SCALE: 1-1/2" = 1'-0"

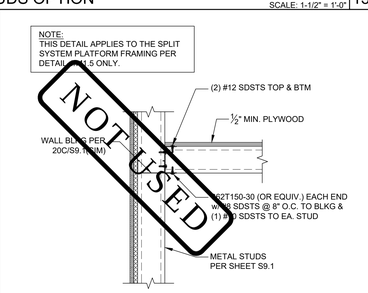

NOTE:
THIS DETAIL APPLIES TO THE SPLIT SYSTEM PLATFORM FRAMING PER DETAIL 1/M1.5 ONLY.

DETAIL @ STEEL STUD OPTION 18
SCALE: 1-1/2" = 1'-0"

IDENTIFICATION STAMP
DIV. OF THE STATE ARCHITECT
APP: 03-124589 INC:
REVIEWED FOR
SS ☑ FLS ☑ ACS ☑
DATE: 04/15/2025

AMS®
American Modular Systems
787 Spreckels Ave., Manteca, CA 95336
Phone (209) 825-1921 Fax (209) 825-7018
www.americanmodular.com

INTELLECTUAL-PROPERTY & PROPRIETARY RIGHTS STATEMENT
COPYRIGHT © AMERICAN MODULAR SYSTEMS (AMS)
AMS OWNS ALL COPYRIGHT AND OTHER INTELLECTUAL-PROPERTY AND PROPRIETARY RIGHTS IN THESE DRAWINGS, SPECIFICATIONS, AND THE MATERIAL CONTAINED HEREIN. CERTAIN ELEMENTS SHOWN IN THESE DOCUMENTS ARE REGISTERED TRADEMARKS OF AMS. ALL PATENTABLE MATERIALS CONTAINED IN THESE DOCUMENTS AND ORIGINATING WITH AMS WILL REMAIN THE SOLE PROPERTY OF AMS. THESE DRAWING, SPECIFICATIONS AND THE MATERIAL CONTAINED HEREIN MAY NOT BE REPRODUCED, TRANSMITTED, COPIED, DISTRIBUTED, MODIFIED, OR OTHERWISE DISPOSED OF (DIRECTLY OR INDIRECTLY) AND MAY NOT BE USED (IN WHOLE OR IN PART) TO ASSIST IN THE CONSTRUCTION, DESIGN, OR OTHER MAKING OF, OR FOR THE PURPOSE OF FURNISHING ANY INFORMATION FOR THE CONSTRUCTION, DESIGN, OR OTHER MAKING OF, ANY BUILDINGS (MODULAR OR OTHERWISE), DRAWINGS, SPECIFICATIONS, PRINTS, APPARATUS, OR PARTS THEREOF, EXCEPT AS EXPRESSLY PERMITTED BY WRITTEN CONSENT OF, OR IN A WRITTEN AGREEMENT WITH, AMS. SUBMITTAL OR DISTRIBUTION TO MEET OFFICIAL REGULATORY REQUIREMENTS WILL NOT BE CONSTRUED AS PUBLICATION IN DEROGATION OF AMS'S COPYRIGHT OR OTHER INTELLECTUAL-PROPERTY OR PROPRIETARY RIGHTS.

PRE-CHECKED SET NAME
24' x 40' THRU 120' x 40'
STANDARD MODULAR BUILDING
(HIGH SEISMIC)
FORM®

SITE SPECIFIC PROJECT NAME
VENTURA COLLEGE
(1) 72'x40' BUILDING

APPROVED
DIV. OF THE STATE ARCHITECT
APP: 04-122051 PC
REVIEWED FOR
SS ☑ FLS ☑ ACS ☑ CG ☑
DATE: 04/03/2024

☒ 2022 CBC PRE-CHECK (PC) DOCUMENT
A SEPARATE FIRST AND CLASS PLAN CONSTRUCTION PERMIT IS REQUIRED.

MANUFACTURER PROFESSIONAL OF RECORD ON PC

LICENSED ARCHITECT
PATRICK CARNEY
No. C12631
Ren. 3-31-25
STATE OF CALIFORNIA

THESE DRAWINGS ARE PRELIMINARY AND NOT FOR CONSTRUCTION UNLESS STAMPED & SIGNED BY THE DESIGN PROFESSIONAL OF RECORD.

REVISIONS
1
2
3
4

DRAWN BY:	AA
SCALE:	AS NOTED
DATE:	MM/DD/YY
PROJECT NO:	XXXX-22

SHEET TITLE:
MECHANICAL
ROOF DETAILS

SHEET NUMBER:
M1.6

24'x40' MINIMUM INSULATION SCHEDULE

ZONE	WOOD STUDS WALL	METAL STUDS WALL	ROOF			FLOORS (NON-CONCRETE)	CONCRETE FLOORS
			BATTS	RIGID (w/SHEATHING)	RIGID (w/o SHEATHING)		
1 & 16	R-13	R-5/R-13	R-19	R-15	R-15	R-19	R-5
2 - 5	R-13	R-5/R-13	R-19	R-5	R-5	N/A	N/A
6 -13	R-13	R-5/R-13	R-19	R-5	R-5	N/A	N/A
14 & 15	R-13	R-5/R-13	R-19	R-5	R-5	N/A	N/A

R-5 TO BE RIGID INSULATION

36'x40' MINIMUM INSULATION SCHEDULE

ZONE	WOOD STUDS WALL	METAL STUDS WALL	ROOF			FLOORS (NON-CONCRETE)	CONCRETE FLOORS
			BATTS	RIGID (w/SHEATHING)	RIGID (w/o SHEATHING)		
1 & 16	R-13	R-5/R-13	R-19	R-15	R-15	R-19	R-5
2 - 5	R-13	R-5/R-13	R-19	R-5	R-5	N/A	N/A
6 -13	R-13	R-5/R-13	R-19	R-5	R-5	N/A	N/A
14 & 15	R-13	R-5/R-13	R-19	R-5	R-5	N/A	N/A

R-5 TO BE RIGID INSULATION

48'x40' MINIMUM INSULATION SCHEDULE

ZONE	WOOD STUDS WALL	METAL STUDS WALL	ROOF			FLOORS (NON-CONCRETE)	CONCRETE FLOORS
			BATTS	RIGID (w/SHEATHING)	RIGID (w/o SHEATHING)		
1 & 16	R-13	R-5/R-13	R-19	R-15	R-15	R-19	R-5
2 - 5	R-13	R-5/R-13	R-19	R-5	R-5	N/A	N/A
6 -13	R-13	R-5/R-13	R-19	R-5	R-5	N/A	N/A
14 & 15	R-13	R-5/R-13	R-19	R-5	R-5	N/A	N/A

R-5 TO BE RIGID INSULATION

60'x40' MINIMUM INSULATION SCHEDULE

ZONE	WOOD STUDS WALL	METAL STUDS WALL	ROOF			FLOORS (NON-CONCRETE)	CONCRETE FLOORS
			BATTS	RIGID (w/SHEATHING)	RIGID (w/o SHEATHING)		
1 & 16	R-13	R-5/R-13	R-19	R-15	R-15	R-19	R-5
2 - 5	R-13	R-5/R-13	R-19	R-5	R-5	N/A	N/A
6 -13	R-13	R-5/R-13	R-19	R-5	R-5	N/A	N/A
14 & 15	R-13	R-5/R-13	R-19	R-5	R-5	N/A	N/A

R-5 TO BE RIGID INSULATION

× 72'x40' MINIMUM INSULATION SCHEDULE

ZONE	WOOD STUDS WALL	METAL STUDS WALL	ROOF			FLOORS (NON-CONCRETE)	CONCRETE FLOORS
			BATTS	RIGID (w/SHEATHING)	RIGID (w/o SHEATHING)		
~~1 & 16~~	~~R-13~~	~~R-5/R-13~~	~~R-19~~	~~R-15~~	~~R-15~~	~~R-19~~	~~R-5~~
~~2 - 5~~	~~R-13~~	~~R-5/R-13~~	~~R-19~~	~~R-5~~	~~R-5~~	~~N/A~~	~~N/A~~
6 -13	R-13	R-5/R-13	R-19	R-5	R-5	N/A	N/A
~~14 & 15~~	~~R-13~~	~~R-5/R-13~~	~~R-19~~	~~R-5~~	~~R-5~~	~~N/A~~	~~N/A~~

R-5 TO BE RIGID INSULATION

84'x40' MINIMUM INSULATION SCHEDULE

ZONE	WOOD STUDS WALL	METAL STUDS WALL	ROOF			FLOORS (NON-CONCRETE)	CONCRETE FLOORS
			BATTS	RIGID (w/SHEATHING)	RIGID (w/o SHEATHING)		
1 & 16	R-13	R-5/R-13	R-19	R-15	R-15	R-19	R-15
2 - 5	R-13	R-5/R-13	R-19	R-5	R-5	N/A	N/A
6 -13	R-13	R-5/R-13	R-19	R-5	R-5	N/A	N/A
14 & 15	R-13	R-5/R-13	R-19	R-5	R-5	N/A	N/A

R-5 TO BE RIGID INSULATION

96'x40' MINIMUM INSULATION SCHEDULE

ZONE	WOOD STUDS WALL	METAL STUDS WALL	ROOF			FLOORS (NON-CONCRETE)	CONCRETE FLOORS
			BATTS	RIGID (w/SHEATHING)	RIGID (w/o SHEATHING)		
1 & 16	R-13	R-5/R-13	R-19	R-15	R-15	R-19	R-5
2 - 5	R-13	R-5/R-13	R-19	R-5	R-5	N/A	N/A
6 -13	R-13	R-5/R-13	R-19	R-5	R-5	N/A	N/A
14 & 15	R-13	R-5/R-13	R-19	R-5	R-5	N/A	N/A

R-5 TO BE RIGID INSULATION

108'x40' MINIMUM INSULATION SCHEDULE

ZONE	WOOD STUDS WALL	METAL STUDS WALL	ROOF			FLOORS (NON-CONCRETE)	CONCRETE FLOORS
			BATTS	RIGID (w/SHEATHING)	RIGID (w/o SHEATHING)		
1 & 16	R-13	R-5/R-13	R-19	R-15	R-15	R-19	R-15
2 - 5	R-13	R-5/R-13	R-19	R-5	R-5	N/A	N/A
6 -13	R-13	R-5/R-13	R-19	R-5	R-5	N/A	N/A
14 & 15	R-13	R-5/R-13	R-19	R-5	R-5	N/A	N/A

R-5 TO BE RIGID INSULATION

120'x40' MINIMUM INSULATION SCHEDULE

ZONE	WOOD STUDS WALL	METAL STUDS WALL	ROOF			FLOORS (NON-CONCRETE)	CONCRETE FLOORS
			BATTS	RIGID (w/SHEATHING)	RIGID (w/o SHEATHING)		
1 & 16	R-13	R-5/R-13	R-19	R-15	R-15	R-19	R-5
2 - 5	R-13	R-5/R-13	R-19	R-5	R-5	N/A	N/A
6 -13	R-13	R-5/R-13	R-19	R-5	R-5	N/A	N/A
14 & 15	R-13	R-5/R-13	R-19	R-5	R-5	N/A	N/A

R-5 TO BE RIGID INSULATION

ADDITIONAL HVAC NOTES:
MANUAL OVERRIDE CONTROLS ARE A MANDATORY MEASURE UNDER ENERGY CODE SECTION 120.2(e). ALL HVAC SYSTEMS SHALL HAVE A MANUAL OVERRIDE ACCESSIBLE TO THE OCCUPANTS THAT ALLOWS THEM TO TURN ON THE HVAC SYSTEM DURING NORMAL UNOCCUPIED TIMES. THIS CAN BE A MANUAL OVERRIDE FOR UP TO 4 HOURS, OCCUPANCY SENSOR, OR A 4 HOUR MANUALLY OPERATED TIMER.

MINIMUM INSULATION SCHEDULES

SUSPENDED LAY-IN PANEL CEILING: PER DSA IR 25-2

1. CEILING SYSTEM GENERAL NOTES

1.01 CEILING SYSTEM COMPONENTS SHALL COMPLY WITH ASTM C635 AND SECTION 5.1 OF ASTM E580.

1.02 THE CEILING GRID SYSTEM MUST BE RATED HEAVY DUTY AS DEFINED BY ASTM C635.

1.03 CEILING SYSTEMS. THE FOLLOWING CEILING SYSTEM(S) IS/ARE PART OF THE SCOPE OF THIS PROJECT:

MANUFACTURER: **ARMSTONG (OR EQUAL)**

PRODUCT NAME: **PRELUDE XL AND PRELUDE XL HIGH RECYLED CONTENT(HRC) ICC**

EVALUATION REPORT TYPE AND NUMBER: **ESR#1308**

MAIN RUNNER PART, MODEL, OR CATALOG NUMBER: **7301**

CROSS RUNNER PART, MODEL, CATALOG NUMBER: **4' CROSS T # XL7341 & 2' CROSS T # XL8320**

1.04 SEISMIC WALL CLIP: BERC2 CLIP MANUFACTURER'S MODEL: 7810

1.05 CEILING PANELS SHALL NOT SUPPORT ANY LUMINARIES, AIR TERMINALS OR DEVICES.

1.06 FOR CEILING INSTALLATIONS UTILIZING ACOUSTICAL TILE PANELS OF MINERAL OR GLASS FIBER, IT IS NOT MANDATORY TO PROVIDE ¾" CLEARANCE BETWEEN THE ACOUSTICAL TILE PANELS AND THE WALL ON THE SIDES OF THE CEILING WHICH ARE FREE TO SLIP. FOR ALL OTHER CEILING PANEL TYPES, PROVIDE ¾" CLEARANCE BETWEEN THE CEILING PANEL AND THE WALL ON THE SIDES OF THE CEILING FREE TO SLIP. CLEARANCE BETWEEN CEILING GRID RUNNERS/MEMBERS AND WALLS SHALL COMPLY WITH THE DETAILS ON THESE DRAWINGS REGARDLESS OF CEILING TILE MATERIAL.

2. MATERIALS

2.01 CEILING WIRE SHALL BE CLASS 1 ZINC COATED (GALVANIZED) CARBON STEEL CONFORMING TO ASTM A641. WIRE SHALL BE #12 GAUGE (0.106" DIAMETER) WITH SOFT TEMPER AND MINIMUM ULTIMATE TENSILE STRENGTH = 70 KSI.

2.02 GALVANIZED SHEET STEEL (INCLUDING THAT USED FOR METAL STUD AND TRACK COMPRESSION STRUTS/POST) SHALL CONFORM TO ASTM A653, OR OTHER EQUIVALENT SHEET STEEL LISTED IN SECTION A3.1 OF THE NORTH AMERICAN SPECIFICATION FOR THE DESIGN OF COLD-FORMED STEEL STRUCTURAL MEMBERS, (AISI S100). MATERIAL 43 MIL (18 GAUGE) AND LIGHTER SHALL HAVE MINIMUM YIELD STRENGTH OF 33 KSI. MATERIAL 54 MIL (16 GAUGE) AND HEAVIER SHALL HAVE A MINIMUM YIELD STRENGTH OF 50 KSI.

2.03 ELECTRICAL METALLIC TUBE (EMT) SHALL BE ANSI C80.3/UL 797 CARBON STEEL WITH G90 GALVANIZING. EMT SHALL HAVE MINIMUM YIELD STRENGTH (F_Y) OF 30 KSI AND MINIMUM ULTIMATE STRENGTH (F_U) OF 48 KSI.

3. ATTACHMENT OF HANGER AND BRACING WIRES

3.01 SEPARATE ALL CEILING HANGER AND BRACING WIRES AT LEAST 6 INCHES FROM ALL UNBRACED DUCTS, PIPES, CONDUIT, ETC.

3.02 HANGER AND BRACING WIRES SHALL NOT ATTACH TO OR BEND AROUND OBSTRUCTIONS INCLUDING BUT NOT LIMITED TO PIPING, DUCTWORK, CONDUIT AND EQUIPMENT.

3.03 HANGER WIRES THAT ARE MORE THAN ONE (HORIZONTAL) IN SIX (VERTICAL) OUT OF PLUMB SHALL HAVE COUNTER-SLOPING WIRES.

3.04 SLACK SAFETY WIRES SHALL BE CONSIDERED HANGER WIRES FOR INSTALLATION AND TESTING REQUIREMENTS.

3.05 HANGER AND BRACING WIRE ANCHORAGE TO THE STRUCTURE SHALL BE INSTALLED IN SUCH A MANNER THAT THE DIRECTION OF THE ANCHORAGE ALIGNS CLOSELY WITH THE DIRECTION OF THE WIRE (E.G., BRACING WIRE CEILING CLIPS MUST BE BENT AS SHOWN IN THE DETAILS AND ROTATED AS REQUIRED TO ALIGN CLOSELY WITH THE DIRECTION OF THE WIRE, SCREW EYES IN WOOD MUST BE INSTALLED SO THEY ALIGN CLOSELY WITH THE DIRECTION OF THE WIRE, ETC.).

4. FASTENERS AND WELDING

4.01 SHEET METAL SCREWS SHALL COMPLY WITH ASTM C1513 AND ASME B18.6.3. PENETRATION OF SCREWS THROUGH JOINED MATERIAL SHALL NOT BE LESS THAN THREE EXPOSED THREADS.

4.02 N/A

4.03 N/A

4.04 IF NOT OTHERWISE SPECIFIED IN THE EVALUATION REPORT, POWER-ACTUATED FASTENERS INSTALLED IN STEEL SHALL BE INSTALLED SO THE ENTIRE POINTED END OF THE FASTENER IS DRIVEN THROUGH THE STEEL MEMBER

4.05 POWER-ACTUATED FASTENERS IN CONCRETE OR MASONRY ARE NOT PERMITTED FOR BRACING WIRES.

4.06 CONCRETE REINFORCEMENT AND PRE-STRESSING TENDONS SHALL BE LOCATED BY NON-DESTRUCTIVE MEANS PRIOR TO INSTALLING POST-INSTALLED ANCHORS.

4.07 WELDING SHALL BE IN ACCORDANCE WITH AWS D1.3 USING E60XX SERIES ELECTRODES.

5. TESTING

5.01 ALL FIELD TESTING MUST BE PERFORMED IN THE PRESENCE OF THE PROJECT INSPECTOR.

5.02 POST-INSTALLED ANCHORS IN CONCRETE USED TO SUPPORT HANGER WIRES SHALL BE TESTED AT A FREQUENCY OF 10 PERCENT. POWER-ACTUATED FASTENERS IN CONCRETE SHALL BE FIELD TESTED FOR 200 POUNDS IN TENSION. ALL OTHER POST-INSTALLED ANCHORS IN CONCRETE SHALL BE TESTED IN ACCORDANCE WITH CBC SECTION 1910A.5.

5.03 POST-INSTALLED ANCHORS IN CONCRETE USED TO ATTACH BRACING WIRES SHALL BE TESTED AT A FREQUENCY OF 50 PERCENT IN ACCORDANCE WITH CBC SECTION 1910A.5.

6. LUMINARIES

6.01 ALL LUMINARIES SHALL BE POSITIVELY ATTACHED TO THE CEILING SUSPENSION SYSTEMS BY MECHANICAL MEANS TO RESIST A HORIZONTAL FORCE EQUAL TO THE WEIGHT OF THE LUMINARIES. A MINIMUM OF TWO SCREWS OR APPROVED FASTENERS ARE REQUIRED AT EACH LUMINARIES, PER ASTM E580 SECTION 5.3.1.

6.02 SURFACE-MOUNTED LUMINARIES SHALL BE ATTACHED TO THE MAIN RUNNER WITH AT LEAST TWO POSITIVE CLAMPING DEVICES. THE CLAMPING DEVICE SHALL COMPLETELY SURROUND THE SUPPORTING CEILING RUNNER AND BE MADE OF STEEL WITH A MINIMUM THICKNESS OF #14 GAUGE. ROTATIONAL SPRING CATCHES DO NOT COMPLY. A #12 GAUGE SLACK SAFETY WIRE SHALL BE CONNECTED FROM EACH CLAMPING DEVICE TO THE STRUCTURE ABOVE. PROVIDE ADDITIONAL SUPPORTS WHEN A LUMINARY IS 8 FEET OR LONGER OR EXCEEDS 56 POUNDS. MAXIMUM SPACING BETWEEN SUPPORTS SHALL NOT EXCEED 8 FEET.

6.03 LUMINARIES WEIGHING LESS THAN OR EQUAL TO 10 POUNDS MAY BE SUPPORTED DIRECTLY ON THE CEILING RUNNERS, SHALL HAVE A MINIMUM OF ONE #12 GAUGE SLACK SAFETY WIRE CONNECTED FROM THE FIXTURE HOUSING TO THE STRUCTURE ABOVE.

6.04 LUMINARIES WEIGHING GREATER THAN 10 POUNDS BUT LESS THAN OR EQUAL TO 56 POUNDS MAY BE SUPPORTED DIRECTLY ON THE CEILING RUNNERS, BUT THEY SHALL HAVE A MINIMUM OF TWO #12GAUGE SLACK SAFETY WIRES CONNECTED FROM THE FIXTURE HOUSING AT DIAGONAL CORNERS TO THE STRUCTURE ABOVE.

EXCEPTION: ALL LUMINARIES GREATER THAN TWO BY FOUR FEET WEIGHING LESS THAN 56 POUNDS SHALL HAVE A #12 GAUGE SLACK SAFETY WIRE AT EACH CORNER.

6.05 ALL LUMINARIES WEIGHING GREATER THAN 56 POUNDS SHALL BE INDEPENDENTLY SUPPORTED BY NOT LESS THAN FOUR TAUT #12 GAUGE HANGER WIRES (ONE AT EACH CORNER) ATTACHED FROM THE FIXTURE HOUSING TO THE STRUCTURE ABOVE OR OTHER APPROVED HANGERS. THE FOUR TAUT #12 GAUGE WIRES OR OTHER APPROVED HANGERS, INCLUDING THEIR ATTACHMENT TO THE STRUCTURE ABOVE, SHALL BE CAPABLE OF SUPPORTING FOUR TIMES THE WEIGHT OF THE FIXTURE.

7. SERVICES WITHIN THE CEILING

7.01 ALL FLEXIBLE SPRINKLER HOSE FITTING MOUNTING BRACKETS, CEILING-MOUNTED AIR TERMINALS OR OTHER SERVICES SHALL BE POSITIVELY ATTACHED TO THE CEILING SUSPENSION SYSTEMS BY MECHANICAL MEANS. SCREWS OR APPROVED FASTENERS ARE REQUIRED. A MINIMUM OF TWO ATTACHMENTS ARE REQUIRED AT EACH COMPONENT.

7.02 CEILING-MOUNTED AIR TERMINALS OR OTHER SERVICES WEIGHING LESS THAN OR EQUAL TO 20 POUNDS SHALL HAVE ONE #12 GAUGE SLACK SAFETY WIRE ATTACHED FROM THE TERMINAL OR SERVICE TO THE STRUCTURE ABOVE.

7.03 FLEXIBLE SPRINKLER HOSE FITTINGS, CEILING-MOUNTED AIR TERMINALS OR OTHER SERVICES WEIGHING MORE THAN 20 POUNDS BUT LESS THAN OR EQUAL TO 56 POUNDS SHALL HAVE TWO #12 GAUGE SLACK SAFETY WIRES (AT DIAGONAL CORNERS) CONNECTED FROM THE TERMINAL OR SERVICE TO THE STRUCTURE ABOVE.

7.04 FLEXIBLE SPRINKLER HOSE FITTINGS, CEILING-MOUNTED AIR TERMINALS OR OTHER SERVICES WEIGHING MORE THAN 56 POUNDS SHALL BE SUPPORTED DIRECTLY FROM THE STRUCTURE ABOVE BY NOT LESS THAN FOUR TAUT #12 GAUGE HANGER WIRES ATTACHED FROM THE TERMINAL OR SERVICE TO THE STRUCTURE ABOVE OR OTHER APPROVED HANGERS.

8. OTHER DEVICES WITHIN THE CEILING

8.01 ALL LIGHTWEIGHT MISCELLANEOUS DEVICES, SUCH AS STROBE LIGHTS, OCCUPANCY SENSORS, SPEAKERS, EXIT SIGNS, ETC., SHALL BE ATTACHED TO THE CEILING GRID. IN ADDITION, DEVICES WEIGHING MORE THAN10 POUNDS SHALL HAVE A #12 GAUGE SLACK SAFETY WIRE ANCHORED TO THE STRUCTURE ABOVE. DEVICES WEIGHING MORE THAN 20 POUNDS SHALL BE SUPPORTED INDEPENDENTLY FROM THE STRUCTURE ABOVE.

TABLE A - HEAVY DUTY GRID COMPONENTS

MANUFACTURER	MAIN TEE	H.D. 4' CROSS TEE	H.D. 2' CROSS TEE	RUNNER SPLICE DETAIL	SEISMIC WALL CLIPS (ICC ESR 1308)	ICC ESR REPORT
DONN/USG	DX-26	DX-424	DX-216	5C/M1.4	BERC2	ICC-ESR-1222
ARMSTRONG	7301	XL7341	XL8320	5C/M1.4	BERC2	ICC-ESR-1308
CHICAGO/ROCKFON	200.01	1274.01	1202.01	5C/M1.4	BERC2	ICC-ESR-2631

NOTES:
1. ALL GRID COMPONENTS SHALL BE BY THE SAME MANUFACTURER
2. REFER TO 'A' DETAIL 5/M1.4 FOR BERC2 CLIP DETAIL

METAL SUSPENSION SYSTEMS FOR LAY IN PANEL CEILING

IDENTIFICATION STAMP
DIV. OF THE STATE ARCHITECT
APP: 03-124589 INC:
REVIEWED FOR
SS ☑ FLS ☑ ACS ☑
DATE: 04/15/2025

American Modular Systems
787 Spreckels Ave., Manteca, CA 95336
Phone (209) 825-1921 Fax (209) 825-7018
www.americanmodular.com

INTELLECTUAL-PROPERTY & PROPRIETARY RIGHTS STATEMENT
COPYRIGHT © AMERICAN MODULAR SYSTEMS (AMS)
AMS OWNS ALL COPYRIGHT AND OTHER INTELLECTUAL-PROPERTY AND PROPRIETARY RIGHTS IN THESE DRAWINGS, SPECIFICATIONS, AND THE MATERIAL CONTAINED HEREIN. CERTAIN ELEMENTS SHOWN IN THESE DOCUMENTS ARE REGISTERED TRADEMARKS OF AMS. ALL PATENTABLE MATERIALS CONTAINED IN THESE DOCUMENTS AND ORIGINATING WITH AMS WILL REMAIN THE SOLE PROPERTY OF AMS. THESE DRAWING, SPECIFICATIONS, AND THE MATERIAL CONTAINED HEREIN MAY NOT BE REPRODUCED, TRANSMITTED, COPIED, DISTRIBUTED, MODIFIED, OR OTHERWISE DISPOSED OF (DIRECTLY OR INDIRECTLY) AND MAY NOT BE USED (IN WHOLE OR IN PART) TO ASSIST IN THE CONSTRUCTION, DESIGN, OR OTHER MAKING OF, OR FOR THE PURPOSE OF FURNISHING ANY INFORMATION FOR THE CONSTRUCTION, DESIGN, OR OTHER MAKING OF, ANY BUILDINGS (MODULAR OR OTHERWISE), DRAWINGS, SPECIFICATIONS, PRINTS, APPARATUS, OR PARTS THEREOF, EXCEPT AS EXPRESSLY PERMITTED BY WRITTEN CONSENT OF, OR IN A WRITTEN AGREEMENT WITH, AMS. SUBMITTAL OR DISTRIBUTION TO MEET OFFICIAL REGULATORY REQUIREMENTS WILL NOT BE CONSTRUED AS PUBLICATION IN DEROGATION OF AMS'S COPYRIGHT OR OTHER INTELLECTUAL-PROPERTY OR PROPRIETARY RIGHTS.

PRE-CHECKED SET NAME
24' x 40' THRU 120' x 40'
STANDARD MODULAR BUILDING
(HIGH SEISMIC)

SITE SPECIFIC PROJECT NAME
VENTURA COLLEGE
(1) 72'x40' BUILDING

APPROVED
DIV. OF THE STATE ARCHITECT
APP: 04-122051 PC
REVIEWED FOR
SS ☑ FLS ☑ ACS ☑ CG ☑
DATE: 04/03/2024

☒ 2022 CBC PRE-CHECK (PC) DOCUMENT
A SEPARATE PROJECT APPLICATION FOR CONSTRUCTION IS REQUIRED.

MANUFACTURER PROFESSIONAL OF RECORD ON PC

LICENSED ARCHITECT
RANDAL PATRICK CAVANAGH
No. C12631
Ren. 3-31-25
STATE OF CALIFORNIA

THESE DRAWINGS ARE PRELIMINARY AND NOT FOR CONSTRUCTION UNLESS STAMPED & SIGNED BY THE DESIGN PROFESSIONAL OF RECORD.

REVISIONS
1
2
3
4

DRAWN BY:	AA
SCALE:	AS NOTED
DATE:	MM/DD/YY
PROJECT NO:	XXXX-22

SHEET TITLE:
CEILING NOTES, SPECIFICATIONS AND MINUMUM INSULATION SCHDULES

SHEET NUMBER:
M1.7

HEATING VENTILATING AND AIR CONDITIONING (HVAC)

1. HEAT PUMP: SINGLE PACKAGE WALL-MOUNTED AIR-TO-AIR ELECTRIC HEAT PUMP UNIT SHALL BE RATED IN ACCORDANCE WITH A.R.I. STANDARD 240-77. MAXIMUM AC SIZE FOR THIS BUILDING WILL BE A 5-TON UNIT. ALL UNITS SHALL BE 230/208 VOLT, 1 PHASE SYSTEM, UL TESTED & APPROVED OR COMPARABLE, AND MEET CURRENT ENERGY STANDARDS.
   - A. THE SYSTEM SHALL MAINTAIN AN AUTOMATICALLY CONTROLLED INDOOR CLASSROOM TEMPERATURE OF 78 DEGREES F. WHEN THE OUTDOOR DRY BULB TEMPERATURE VARIES BETWEEN 100 DEGREES F. IN THE SUMMER
   - B. THE SYSTEM MUST MAINTAIN THE ABOVE TEMPERATURE WHEN THE DAMPER IS ADJUSTED TO USE APPROXIMATELY ONE-THIRD FRESH AIR.

2. DUCTWORK
   - A. CONSTRUCT ALL DUCTWORK OF GALVANIZED SHEET METAL IN ACCORDANCE WITH C.M.C., ASHRAE GUIDE EQUIPMENT VOLUME, AND SMACNA LOW VELOCITY DUCT CONSTRUCTION MANUAL, LATEST EDITIONS. ALL DUCTWORK SHALL BE INSULATED WITH 1" THICK FIBERGLASS DUCT WRAP WITH VAPOR BARRIER. PROVIDE 1" DUCT ATTENUATION AT ALL DUCTWORK WITHIN 2'-0" OF HVAC UNIT.
   - B. NON-METALLIC DUCTWORK OPTION: IN ACCESSIBLE CONCEALED PORTIONS OF DUCT SYSTEM, RIGID 1" FIBERGLASS OR INSULATED FLEX-DUCT WITH VAPOR BARRIER MAY BE SUBSTITUTED FOR SHEET METAL DUCTWORK. ALL DUCTWORK WITHIN 2'-0" OF THE HVAC UNIT AND ALL INTERFACE CONNECTIONS SHALL BE METAL. DUCTWORK AND REINFORCEMENT SHALL BE DESIGNED FOR 2" STATIC PRESSURE. REFERENCE BRANDS: OWENS-CORNING FIBERGLASS DUCTBOARD, 1" THICK, AND MICRO-AIRE TYPE 475. NON-METALLIC DUCTWORK SHALL CONFORM TO NFPA 90-A AND SMACNA CLASS 1 RATING.
   - C. DUCT INSTALLATION AND PLENUMS SHALL MEET THE REQUIREMENTS OF ENERGY CODE SECTION 120.4 AND THE MANUFACTURER'S INSTALLATION INSTRUCTIONS. (MINIMUM R=4.2) HORIZONTAL FLEX DUCT SHALL BE SUPPORTED AT A MAXIMUM 4' INTERVALS, WITH HANGING STRAPS A MINIMUM 1-1/2" WIDE. DUCTS MUST BE PULLED TIGHTS WITH A MAXIMUM SAG OF 1/2" PER FOOT OF HORIZONTAL RUN. DUCTS SHALL NOT BE KINKED OR CRUSHED. BEND/RADIUS EQUAL TO THE DUCT DIAMETER OR GREATER.
   - D. SIZES OF SUPPLY AND RETURN DUCTS SHALL BE SPECIFIED ON PLANS. HVAC CURB SUPPLY AND RETURN DUCTS SHALL BE THE SAME SIZE AND ALLIGN WITH THE HVAC UNIT.
   - E. FLEXIBLE AIR DUCTS AND CONNECTORS SHALL BE NOT MORE THAN 5 FEET IN LENGTH AND SHALL NOT BE USED IN LIEU OF RIGID ELBOWS OR FITTINGS. FLEXIBLE AIR DUCTS SHALL BE PERMITTED TO BE USED AS AN ELBOW AT A TERMINAL DEVICE PER ENERGY CODE 120.4 AND CMC 603.4.1

3. AIR DUCT INSULATION AND LININGS SHALL COMPLY WITH FLAME SPREAD LESS THAN OR EQUAL TO 25, SMOKE GENERATION LESS THAN OR EQUAL TO 50.

4. SUPPLY AIR DIFFUSERS SHALL BE 675 CFM MAXIMUM, 12" ROUND. 1" FIBERGLASS OR FLEXDUCT DUCTWORK SPECIFICALLY DESIGNED TO PROVIDE AIR THERMAL COOLING SYSTEMS. 24"X8"X1" MICRO-AIRE TYPE #475 OWENS-CORNING, KNAUF, CERTAINTEED, OR EQUAL AND 90-B: UL #131 TEST, CLASS 1 RATING WITH "SMACNA".

5. REGISTERS AND DIFFUSERS: PROVIDE THREE (MINIMUM) 4-WAY THROW AIR DIFFUSERS AS MANUFACTURED BY CARNES, TITUS, HART AND COOLEY, METALAIRE, SHOEMAKER, BARBER-COLEMAN OR KRUEGER COMMERCIAL GRADE GRILLS AND REGISTERS.

6. AIR CONDITIONING CONTROLS: PROVIDE ELECTRONIC PROGRAMMABLE THERMOSTAT. THERMOSTAT SHALL BE PROGRAMMED WITH EXPECTED OCCUPIED TIMERS. AIR HANDLER FAN WILL BE PROGRAMMED TO RUN DURING ALL OCCUPIED TIMES. PRE-OCCUPANCY PURGE SHALL BE PROGRAMMED ONE HOUR PRIOR TO THE MODULAR BUILDING BEING NORMALLY OCCUPIED.
   THERMOSTAT SHALL HAVE THE FOLLOWING FUNCTIONS:
   - C. 5 AND 2 WEEKDAY/WEEKEND PROGRAMMING DAYS WITH 4 SEPARATE TIME/TEMPERATURE SETTINGS FOR A 24-HOUR PERIOD.
   - D. KEY BOARD LOCKOUT SWITCH.
   - E. PROGRAMMABLE DISPLAY.
   - F. 2-HOUR OVERRIDE MINIMUM.
   - G. STATUS INDICATED LED'S.
   - H. BATTERY BACK-UP.
   - I. PROVIDE LOCKING CLEAR THERMOSTAT COVER WITH THERMOSTAT COVER WITH ACCESS HOLE FOR PROGRAM OVERRIDE. WHITE RODGERS IF92-371. MOUNT TOP OF BOX @ 48" A.F.F. MAX. (WHERE SEALED, SETTINGS & ADJUSTMENTS CAN BE DONE BY SERVICE PERSONNEL ONLY.)

7. THERMAL INSULATION
   - A. REFER TO INSULATION TABLES IN SHEET M1.7
   - B. FLAME SPREAD AND SMOKE DEVELOPMENT SHALL CONFORM TO CALIFORNIA BUILDING CODE SEC. 720.
   - C. BURNING CHARACTERISTICS: FLAME SPREAD LESS THAN 25 & SMOKE DEVELOPMENT IS LESS THAN 50

8. FACTORY-MADE AIR DUCTS
   - A. FACTORY-MADE AIR DUCTS SHALL BE APPROVED FOR THE USE INTENDED OR SHALL CONFORM TO THE REQUIREMENTS OF C.M.C. SECTION 601.0.
   - B. EACH PORTION OF A FACTORY-MADE AIR DUCT SYSTEM SHALL BE IDENTIFIED BY THE MANUFACTURER WITH A LABEL OR OTHER SUITABLE IDENTIFICATION INDICATING COMPLIANCE WITH C.M.C. SECTION 601.0 AND ITS CLASS DESIGNATION. THESE DUCTS SHALL BE LISTED AND SHALL BE INSTALLED IN ACCORDANCE WITH THE TERMS OF THEIR LISTING AND THE REQUIREMENTS OF C.M.C. SECTION 601.0.
   - C. DUCT SUPPORT FLEX DUCT TO BE SUPPORTED WITH 1-1/2" WIDE X26 GA. GALV. STRAP @ MAX 4'-0" O.C. ATTACH TO RAFTER WITH TWO #8 S.M.S. @ EACH END.
   - D. SUPPLY AIR PLENUM TO BE SUPPORTED WITH 1-1/2" WIDE X26 GA. GALV. STRAPS MINIMUM 2 PER PLENUM.
   - E. SUPPLY AIR BOX AND DIFFUSERS TO BE SUPPORTED WITH (2) 12 GA. HANGER WIRES TO BOX @ OPPOSITE CORNERS.
   - F. SUPPLY AIR BOX AND DIFFUSERS TO BE BRACED WITH (2) 12 GA. SLACK WIRES TO BOX @ OPPOSITE CORNERS. ATTACH SUPPLY AIR DIFFUSERS TO CEILING GRID TO RESIST A LATERAL LOAD EQUAL TO THE WEIGHT OF THE DIFFUSER AND SUPPLY AIR BOX WITH TWO #8 S.M.S.

9. FIREBLOCKING SHALL BE PROVIDED IN THE FOLLOWING LOCATIONS:
   - A. IN CONCEALED SPACES OF STUD WALLS AND PARTITIONS, INCLUDING FURRED SPACES;
   - B. AT THE CEILING AND FLOOR LEVELS;
   - C. AND AT 10-FOOT (3048MM) INTERVALS BOTH VERTICAL AND HORIZONTAL. REFERENCE 2022 CBC SECTION 718.

10. THE INTERIOR ENVIRONMENT SHALL BE ASSEMBLED WITH PRODUCTS THAT CONTRIBUTE TO A HEALTHY INDOOR AIR QUALITY (IAQ). THE FOLLOWING SHALL COMPLY TITLE 24, PART 11 ("CAL-GREEN"), SECTION 5.504.4. (SEE SHEET N1.0, SECTION 9C "INTERIOR AIR QUALITY CONTROL")

11. HVAC FILTER
   - A. FILTERS SHALL HAVE A "MINIMUM EFFICIENCY REPORTING VALUE" OF 13 WITH 2" DEPTH MIN. (MERV 13) AND SHALL BE INSTALLED PRIOR TO OCCUPANCY AND RECOMMENDATIONS FOR MAINTENANCE WITH FILTERS OF THE SAME VALUE SHALL BE INCLUDED IN THE OPERATION AND MAINTENANCE MANUAL, PER 2022 CEC SECTION 5.504.5.3
   - D. INSTALLED FILTERS SHALL BE CLEARLY LABELED BY THE MANUFACTURER INCLUDING THE MERV RATING, PER 2022 CBC SECTION 5.504.5.3.1

10. ROOF MOUNTED HVAC
   - A. A GASKET SHALL BE PLACED BETWEEN THE CURB AND THE HVAC UNIT. MASTIC SEALANT SHALL BE USED TO SEAL ALL SEAMS BETWEEN THE HVAC UNIT AND DUCTS.

13. HVAC CONTROLS
   - A. THERMOSTAT (BY OTHERS) WILL BE PROGRAMMED WHEN THE MODULAR BUILDING IS PLACED ON A SITE TO ENSURE THE MINIMUM AIR RATE WILL BE SUPPLIED TO THE SPACE AT ALL USUALLY OCCUPIED TIMES AND PROGRAMMED TO PROVIDE A PRE-OCCUPANCY PURGE ONE HOUR PRIOR TO THE MODULAR BUILDING BEING NORMALLY OCCUPIED PER ENERGY CODE 120.1(C)1.

14. UPON SITE PLACEMENT OR SITE CONSTRUCTION, THE OPERATION AND MAINTENANCE DOCUMENTATION FOR ALL MECHANICAL AND LIGHTING SYSTEMS AND CONTROLS SHALL BE PROVIDED BY THE GENERAL CONTRACTOR FOR THE PERMANENT MODULAR RELOCATABLE BUILDING AND DELIVERED TO THE OWNER.

HVAC NOTES

HEATING VENTILATING AND AIR CONDITIONING (HVAC) continued

15. THE CALIFORNIA ENERGY CODE 10-103 REQUIRES ACCEPTANCE TESTING ON ALL NEWLY INSTALLED LIGHTING CONTROLS, MECHANICAL SYSTEMS, ENVELOPES, AND PROCESS EQUIPMENT AFTER INSTALLATION AND BEFORE PROJECT COMPLETION. AN ACCEPTANCE TEST IS FUNCTIONAL PERFORMANCE TEST TO HELP ENSURE THAT NEWLY INSTALLED EQUIPMENT IS OPERATING AND IN COMPLIANCE WITH THE ENERGY CODE.

16. LIGHTING CONTROLS ACCEPTANCE TESTS MUST BE PERFORMED BY A CERTIFIED LIGHTING CONTROL ACCEPTANCE TEST TECHNICIAN (ATT). MECHANICAL SYSTEM ACCEPTANCE TESTS MUST BE PERFORMED BY CERTIFIED MECHANICAL ATT FOR PROJECTS SUBMITTED ON OR AFTER OCTOBER 1, 2021. ENVELOPE AND PROCESS EQUIPMENT ACCEPTANCE TESTS SHALL BE PERFORMED BY THE INSTALLING CONTRACTOR, ENGINEER/ARCHITECT OF RECORD OR THE OWNER'S AGENT.

17. A LISTING OF CERTIFIED ATT'S CAN BE FOUND AT: HTTPS://WWW.ENERGY.CA.GOV/PROGRAMS-AND-TOPICS/PROGRAMS/ACCEPTANCE-TEST-TECHNICIAN-CERTIFICATION-PROVIDER-PROGRAM/ACCEPTANCE.
THE ACCEPTANCE TESTING PROCEDURES MUST BE REPEATED, AND DEFICIENCIES MUST BE CORRECTED BY THE BUILDER OR INSTALLING CONTRACTOR UNTIL THE CONSTRUCTION/INSTALLATION OF PROJECT INSPECTORS WILL BE COLLECTING THE FORMS TO CONFIRM THAT THE REQUIRED ACCEPTANCE TESTS HAVE BEEN COMPLETED.

18. THERMOSTAT SHALL BE PROGRAMMED TO PREVENT SUPPLEMENTARY HEATER OPERATION WHEN THE HEATING LOAD CAN BE MET BY THE HEAT PUMP ALONE. THE CUT-ON TEMPERATURE FOR COMPRESSION HEATING MUST BE HIGHER THAN THE CUT-ON TEMPERATURE FOR SUPPLEMENTARY HEATING, AND THE CUT-OFF TEMPERATURE FOR COMPRESSION HEATING MUST BE HIGHER THAN THE CUT-OFF TEMPERATURE FOR SUPPLEMENTARY HEATING PER CEC 2022 SECTION 110.2(B).

HVAC NOTES (CONTINUATION)

H2 FAN SYSTEMS

BUILDING SIZE	DESIGN OA CFM
~~24'x40'~~	~~365~~
~~36'x40'~~	~~547~~
~~48'x40'~~	~~365~~
~~60'x40'~~	~~456~~
72'x40'	547
~~84'x40'~~	~~365~~
~~96'x40'~~	~~365~~
~~108'x40'~~	~~365~~
~~120'x40'~~	~~365~~

HVAC CFM CHART

	MODEL #	DESCRIPTION	MAX. CFM	UNIT WEIGHT (LBS)	EER
SYSTEM AIR INDOOR	CAH-3	4 TON HEAT PUMP	1600	948	11
	CAH-5	5 TON HEAT PUMP	1800	948	11

HVAC CFM CHART

NOT USED

	MODEL #	DESCRIPTION	MAX. CFM	UNIT WEIGHT (LBS)	EER	COP	CLIMATE ZONE(S)
BARD WALL HUNG	W36HB	3 TON HEAT PUMP	1140	500	11	3.3	1-16
	W42HC	3½ TON HEAT PUMP	1140	500	11	3.3	1-16
	W48HC	4 TON HEAT PUMP	1650	505	11	3.3	1-16
	W60HC	4½ TON HEAT PUMP	1855	515	11	3.3	1-16

HVAC CFM CHART

NOT USED

	MODEL #	DESCRIPTION	MAX. CFM	UNIT WEIGHT (LBS)	EER	SEER	CLIMATE ZONE(S)
CARRIER ROOF MOUNT	50VT-C36---3--TP	3 TON HEAT PUMP	1200	371	12.0	14.5	1-16
	50VT-C42---3--TP	3½ TON HEAT PUMP	1400	412	12.0	14.5	1-16
	50VT-C48---3--TP	4 TON HEAT PUMP	1600	412	12.0	14.5	1-16
	50VT-C60---3--TP	4½ TON HEAT PUMP	1750	462	12.0	14.2	1-16

HVAC CFM CHART

NOT USED

	MODEL #	DESCRIPTION	AIR HANDLER MODEL # (INTERIOR OR ATTIC MOUNTED)	MAX. CFM	UNIT WEIGHT (LBS)	EER	SEER	CLIMATE ZONE(S)
CARRIER SPLIT DX SYSTEM	25HCE436A003	3 TON HEAT PUMP	FX4DN037	1200	157	11.5	14.0	1-16
	25HCE442A003	3½ TON HEAT PUMP	FX4DN043	1400	157	11.5	14.0	1-16
	25HCE448A003	4 TON HEAT PUMP	FX4DN049	1600	185	11.5	14.0	1-16
	25HCE460A003	4½ TON HEAT PUMP	FX4DN061	2000	201	11.5	14.0	1-16

BARD WALL HUNG HVAC UNITS MAY BE SUBSTITUTED WITH CARRIER ROOF MOUNT OR CARRIER SPLIT DX SYSTEMS, PER CHARTS ABOVE, WITHOUT INCREASING THE HVAC UNIT'S TONNAGE.

BARD ITEC OR SYSTEM AIR HVAC UNITS MAY ONLY BE SUBSTITUTED WITH HVAC UNITS THAT MEET OR EXCEED THE EFFICIENCY (SEER & HPSF) IN THE TABLE ABOVE, INCLUDE CO2 SENSORS AND VARIABLE SPEED SUPPLY FANS.

THE CALIFORNIA ENERGY CODE SECTION 10-103 REQUIRES ACCEPTANCE TESTING ON ALL NEWLY INSTALLED LIGHTING CONTROLS, MECHANICAL SYSTEMS, ENVELOPES, AND PROCESS EQUIPMENT AFTER INSTALLATION AND BEFORE PROJECT COMPLETION. AN ACCEPTANCE TEST IS A FUNCTIONAL PERFORMANCE TEST TO HELP ENSURE THAT NEWLY INSTALLED EQUIPMENT IS OPERATING AND IN COMPLIANCE WITH ENERGY CODE.

LIGHTING CONTROLS ACCEPTANCE TESTS MUST BE PERFORMANCE BY A CERTIFIED LIGHTING CONTROLS ACCEPTANCE TEST TECHNICIAN (ATT).

MECHANICAL SYSTEM ACCEPTANCE TESTS MUST BE PERFORMED BY A CERTIFIED MECHANICAL ATT FOR PROJECTS SUBMITTED ON OR AFTER OCTOBER 1, 2021.
ENVELOPE AND PROCESS EQUIPMENT ACCEPTANCE TESTS SHALL BE PERFORMED BY THE INSTALLING CONTRACTOR, ENGINEER/ARCHITECT OF RECORD OR THE OWNER'S AGENT.

A LIST OF CERTIFIED ATT'S CAN BE FOUND AT:
HTTP://WWW.ENERGY.CA.GOV/PROGRAMS-AND-TOPICS/PROGRAMS/ACCEPTANCE-TEST-TECHNICIAN-CERTIFICATION-PROVIDER-PROGRAM/ACCEPTANCE

THE ACCEPTANCE TESTING PROCEDURES MUST BE REPEATED, AND DEFICIENCIES MUST BE CORRECTED BY THE BUILDER OR INSTALLING CONTRACTOR UNTIL THE CONSTRUCTION/INSTALLATION OF THE SPECIFIED SYSTEMS CONFORM AND PASS THE REQUIRED ACCEPTANCE CRITERIA. PROJECT INSPECTORS WILL BE COLLECTING THE FORMS TO CONFIRM THAT THE REQUIRED ACCEPTANCE TESTS HAVE BEEN COMPLETED.

HVAC SCHEDULE

BUILDING SIZE & CLIMATE ZONE GROUP (ZONE)	# OF HVAC 3½ TON (BARD)	4 TON (BARD)	4 TON (SYSTEM AIR)	5 TON (SYTEM AIR)
☐ 24'x40' GROUP A (1,16)	1			
☐ 24'x40' GROUP B (2-5)	1			
☐ 24'x40' GROUP C (6-13)	1			
☐ 24'x40' GROUP D (14,15)	1			
☐ 36'x40' GROUP A (1,16)	1			
☐ 36'x40' GROUP B (2-5)	1			
☐ 36'x40' GROUP C (6-13)			1	
☐ 36'x40' GROUP D (14,15)			1	
☐ 48'x40' GROUP A (1,16)	2			
☐ 48'x40' GROUP B (2-5)	2			
☐ 48'x40' GROUP C (6-13)	2			
☐ 48'x40' GROUP D (14,15)	2			

BUILDING SIZE & CLIMATE ZONE GROUP (ZONE)	# OF HVAC 3½ TON (BARD)	4 TON (BARD)	4 TON (SYSTEM AIR)	5 TON (SYTEM AIR)
☐ 60'x40' GROUP A (1,16)	2			
☐ 60'x40' GROUP B (2-5)	2			
☐ 60'x40' GROUP C (6-13)	2			
☐ 60'x40' GROUP D (14,15)		2		
☐ 72'x40' GROUP A (1,16)	2			
☐ 72'x40' GROUP B (2-5)	2			
☒ 72'x40' GROUP C (6-13)			2	
☐ 72'x40' GROUP D (14,15)			2	
☐ 84'x40' GROUP A (1,16)	2			
☐ 84'x40' GROUP B (2-5)	2			
☐ 84'x40' GROUP C (6-13)			2	
☐ 84'x40' GROUP D (14,15)			2	

BUILDING SIZE & CLIMATE ZONE GROUP (ZONE)	# OF HVAC 3½ TON (BARD)	4 TON (BARD)	4 TON (SYSTEM AIR)	5 TON (SYTEM AIR)
☐ 96'x40' GROUP A (1,16)	4			
☐ 96'x40' GROUP B (2-5)	4			
☐ 96'x40' GROUP C (6-13)	4			
☐ 96'x40' GROUP D (14,15)	4			
☐ 108'x40' GROUP A (1,16)	3			
☐ 108'x40' GROUP B (2-5)	3			
☐ 108'x40' GROUP C (6-13)			3	
☐ 108'x40' GROUP D (14,15)			3	
☐ 120'x40' GROUP A (1,16)	5			
☐ 120'x40' GROUP B (2-5)	5			
☐ 120'x40' GROUP C (6-13)	5			
☐ 120'x40' GROUP D (14,15)	5			

1. LOW-PROBABILITY SYSTEM(S) ON PLAN PER CMC 1103.2 IN REGARDS TO REFRIGERANT.
2. REFRIGERANT 410B (WHERE APPLICABLE) AND COORESPONDING SAFETY GROUP ON PLAN (CMC 1103 AND TABLE 1102.3)

ADDITIONAL HVAC NOTES:
MANUAL OVERRIDE CONTROLS ARE A MANDATORY MEASURE UNDER ENERGY CODE SECTION 120.2(e). ALL HVAC SYSTEMS SHALL HAVE A MANUAL OVERRIDE ACCESSIBLE TO THE OCCUPANTS THAT ALLOWS THEM TO TURN ON THE HVAC SYSTEM DURING NORMAL UNOCCUPIED TIMES. THIS CAN BE A MANUAL OVERRIDE FOR UP TO 4 HOURS, OCCUPANCY SENSOR, OR A 4 HOUR MANUALLY OPERATED TIMER.

HVAC SCHEDULES

IDENTIFICATION STAMP
DIV. OF THE STATE ARCHITECT
APP: 03-124589 INC:
REVIEWED FOR
SS ☑ FLS ☑ ACS ☑
DATE: 04/15/2025

American Modular Systems
787 Spreckels Ave., Manteca, CA 95336
Phone (209) 825-1921 Fax (209) 825-7018
www.americanmodular.com

INTELLECTUAL-PROPERTY & PROPRIETARY RIGHTS STATEMENT
COPYRIGHT © AMERICAN MODULAR SYSTEMS (AMS)
AMS OWNS ALL COPYRIGHT AND OTHER INTELLECTUAL-PROPERTY AND PROPRIETARY RIGHTS IN THESE DRAWINGS, SPECIFICATIONS, AND THE MATERIAL CONTAINED HEREIN. CERTAIN ELEMENTS SHOWN IN THESE DOCUMENTS ARE REGISTERED TRADEMARKS OF AMS. ALL PATENTABLE MATERIALS CONTAINED IN THESE DOCUMENTS AND ORIGINATING WITH AMS WILL REMAIN THE SOLE PROPERTY OF AMS. THESE DRAWING, SPECIFICATIONS, AND THE MATERIAL CONTAINED HEREIN MAY NOT BE REPRODUCED, TRANSMITTED, COPIED, DISTRIBUTED, MODIFIED, OR OTHERWISE DISPOSED OF (DIRECTLY OR INDIRECTLY) AND MAY NOT BE USED (IN WHOLE OR IN PART) TO ASSIST IN THE CONSTRUCTION, DESIGN, OR OTHER MAKING OF, OR FOR THE PURPOSE OF FURNISHING ANY INFORMATION FOR THE CONSTRUCTION, DESIGN, OR OTHER MAKING OF, ANY BUILDINGS (MODULAR OR OTHERWISE), DRAWINGS, SPECIFICATIONS, PRINTS, APPARATUS, OR PARTS THEREOF, EXCEPT AS EXPRESSLY PERMITTED BY WRITTEN CONSENT OF, OR IN A WRITTEN AGREEMENT WITH, AMS. SUBMITTAL OR DISTRIBUTION TO MEET OFFICIAL REGULATORY REQUIREMENTS WILL NOT BE CONSTRUED AS PUBLICATION IN DEROGATION OF AMS'S COPYRIGHT OR OTHER INTELLECTUAL-PROPERTY OR PROPRIETARY RIGHTS.

PRE-CHECKED SET NAME
24' x 40' THRU 120' x 40'
STANDARD MODULAR BUILDING
(HIGH SEISMIC)

SITE SPECIFIC PROJECT NAME
VENTURA COLLEGE
(1) 72'x40' BUILDING

APPROVED
DIV. OF THE STATE ARCHITECT
APP: 04-122051 PC
REVIEWED FOR
SS ☑ FLS ☑ ACS ☑ CG ☑
DATE: 04/03/2024

☒ 2022 CBC PRE-CHECK (PC) DOCUMENT
A SEPARATE PROJECT APPLICATION FOR CONSTRUCTION IS REQUIRED.

MANUFACTURER PROFESSIONAL OF RECORD ON PC

LICENSED ARCHITECT
RANDAL PATRICK CAVANAGH
No. C12631
Ren. 3-31-25
STATE OF CALIFORNIA

THESE DRAWINGS ARE PRELIMINARY AND NOT FOR CONSTRUCTION UNLESS STAMPED & SIGNED BY THE DESIGN PROFESSIONAL OF RECORD.

REVISIONS
1
2
3
4

DRAWN BY:	AA
SCALE:	AS NOTED
DATE:	MM/DD/YY
PROJECT NO:	XXXX-22

SHEET TITLE:
MECHANICAL NOTES
& SCHEDULES

SHEET NUMBER:
M1.7A

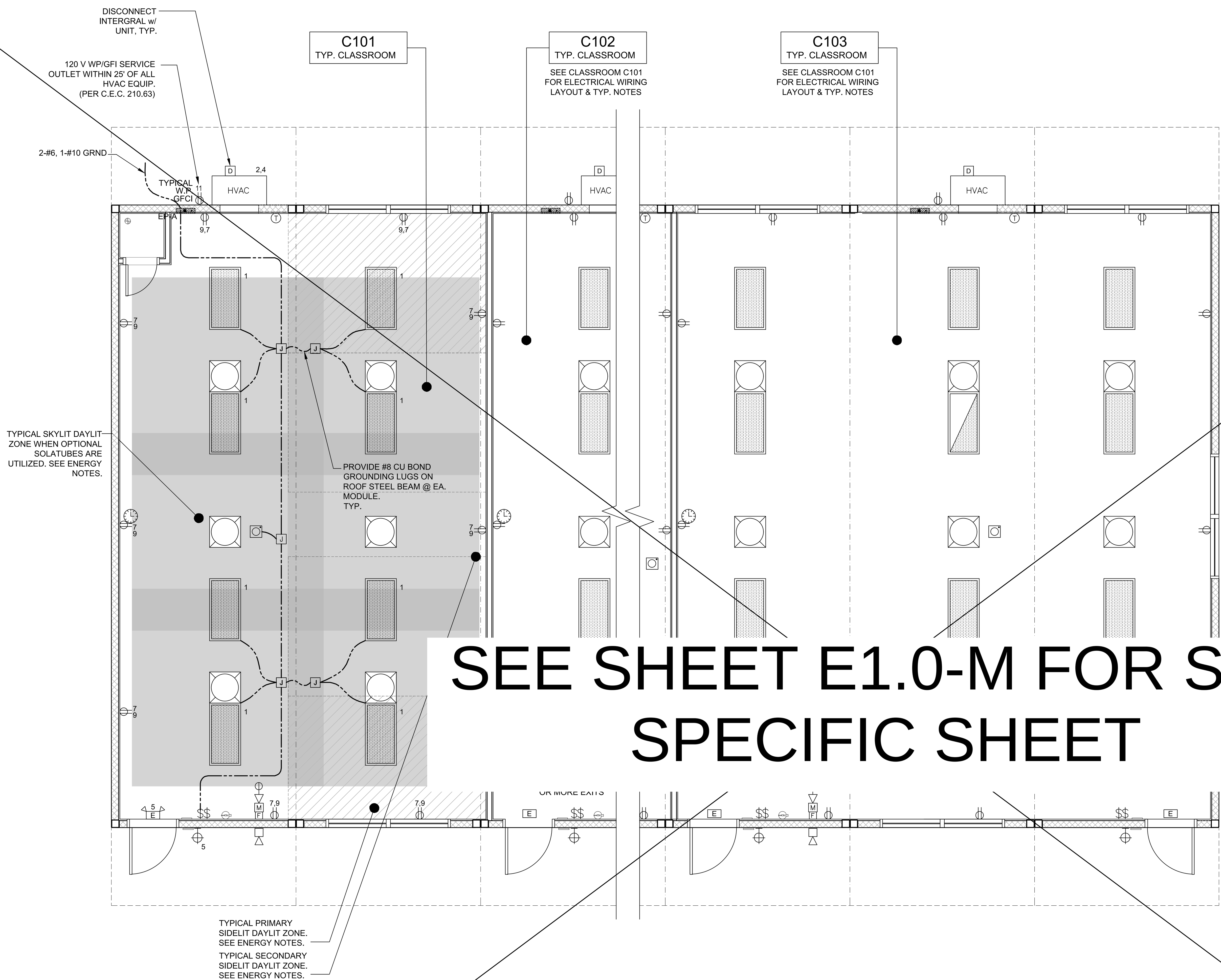

SEE SHEET E1.0-M FOR SITE SPECIFIC SHEET

TYPICAL ELECTRICAL PLAN — SCALE: 1/4" = 1' - 0" — 1

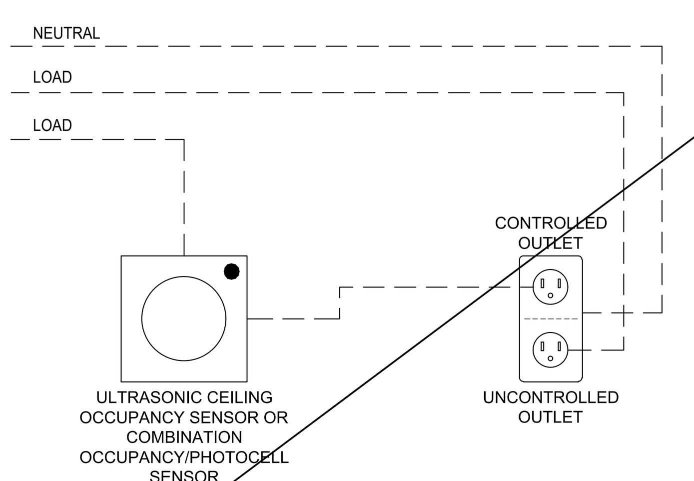

NOTE:
REQUIRED FOR OFFICES, LOBBY, AND MEETING ROOMS ONLY.

TYP. CONTROLED/UNCONTROLED RECEPTACLE WIRING DIAGRAM — N.T.S. — 2

ENERGY CONTROLS

1. AUTOMATIC DAYLIGHTING CONTROLS:
   NOT REQUIRED IN ROOMS WHERE COMBINED INSTALLED LIGHTING POWER IN COMBINED SKYLIT & PRIMARY DAYLIT ZONES ARE <120 WATTS. INSTALLED WATTAGE IN PRIMARY SIDELIT DAY LIT ZONE IS 90 WATTS (2x 45w, AS SHOWN IN THE SHADED AREAS). THEREFORE, AUTOMATIC DAYLIGHTING CONTROLS ARE ONLY REQUIRED WHEN "SOLATUBES" ARE INSTALLED. SEE A1.1. WHEN DAYLIT CONTROLS ARE REQUIRED, PROVIDE COMBINATION OCCUPANCY/PHOTOCELL SENSOR.
2. ENERGY MANAGEMENT CONTROL SYSTEM (EMCS) CONNECTION:
   PER TITLE 24 CODE, "AN EMCS MAY BE INSTALLED TO COMPLY WITH THE REQUIREMENTS OF ONE OR MORE LIGHTING CONTROLS IF IT MEETS THE MINIMUM REQUIREMENTS". PC MAY CONTAIN OCCUPANCY SENSORS AND PHOTOCELL CONTROL LIGHTING, IN THAT CASE, AN EMCS IS NOT REQUIRED FOR THIS PC.
3. SOLAR-READY ZONE REQUIREMENTS:
   REQUIREMENTS & TABLE CAN BE FOUND ON SHEET A2.0
4. SUGGESTED CONTROLS DIAGRAM FOR TYPICAL DAYLIT ZONE:

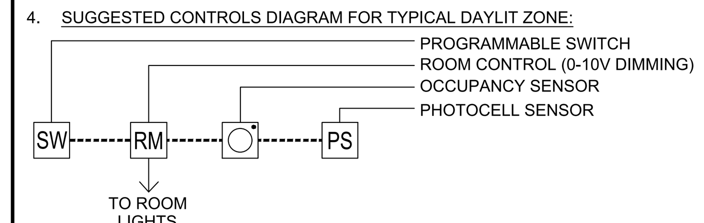

NOTE: ANT MONITORING EQUIPMENT OR ASSOCIATED SENSORS ARE SITE SPECIFIC AND ARE NOT INCLUDED IN THE BASE PC.

ENERGY NOTES

1. THE PROJECT ARCHITECT SHALL BE RESPONSIBLE FOR THE PLACEMENT OF HEAT & SMOKE DETECTORS, EVACS AND PULL STATIONS, AND COMPLETE FIRE ALARM SYSTEM WHEN THE SITE SPECIFIC PROJECT IS REQUIRED TO MEET THE PROVISIONS OF SB 575 & CBC 907.2.3.
2. ANY MONITORING EQUIPMENT OR ASSOCIATED SENSORS ARE SITE SPECIFIC AND ARE NOT INCLUDED IN THIS BASE PC.
3. PULL STATIONS ARE REQUIRED AT EVERY EXIT. AT ANY SPACE REQUIRING 2 OR MORE EXITS, PROVIDE EXIT SIGNS (CBC 1013) AND EMERGENCY EXIT ILLUMINATION (CBC 1008).
4. SEE PLANS FOR LOCATIONS OF ALL DEVICES.
5. STUB-OUT LOCATIONS FOR ELECTRICAL PANEL, FIRE ALARM, AND DATA BOXES ARE SHOWN DIAGRAMMATICAL ONLY. EXACT LOCATIONS MAY VARY +/- SEVERAL FEET. PLEASE CONTACT AMERICAN MODULAR SYSTEMS FOR EXACT LOCATIONS. POINT OF CONNECTION WILL BE AT FACE OF BUILDING.
6. STUB-UP ALL FIRE ALARM JUNCTION BOXES TO ACCESSIBLE ATTIC SPACE WITH 1/2" MIN. GALV. THIN WALL TUBING (EMT). DO NOT CONNECT FIRE ALARM CONDUIT WITH ANY OTHER ELECTRICAL CONDUIT.
7. THE LIGHTS FOR EACH ROOM OVER 250 SQ FT SHALL BE CONTROLLED BY ULTRASONIC OCCUPANCY SENSOR: WATT STOPPER W-500A, W-1000A, OR W-2000A (OR EQUAL) BASED ON THE ROOM SIZE, IN CONJUNCTION WITH BI-LEVEL SWITCHING.
8. FIXTURE MOUNTING SHALL COMPLY WITH CALIFORNIA SEISMIC REGULATIONS.
9. LIGHTING FIXTURES MAY BE INSTALLED ROTATED 90° FROM SHOWN TO MATCH T-BAR GRID LAYOUT.
10. ACCEPTANCE TESTS ARE REQUIRED TO BE COMPLETED ON NEWLY INSTALLED OR REPLACEMENT OF LIGHTING CONTROLS BEFORE PROJECT COMPLETION PER THE CALIFORNIA ADMINISTRATION CODE SECTION 10-103. ACCEPTANCE TESTS MUST BE PERFORMED BY A CERTIFIED ACCEPTANCE TEST TECHNICIAN (ATT). THE ACCEPTANCE TESTING PROCEDURES MUST BE REPEATED, AND DEFICIENCIES CORRECTED UNTIL THE INSTALLATION OF THE SPECIFIED SYSTEMS CONFORM AND PASS THE REQUIRED ACCEPTANCE CRITERIA. COMPLETED NRCA FORMS SHALL BE SUBMITTED TO THE PROJECT INSPECTOR AND THE DISTRICT.

DEMAND RESPONSE CONTROLS

1. DEMAND RESPONSE CONTROLS ARE REQUIRED IN BUILDINGS LARGER THAN 10,000 S.F.
2. DEMAND RESPONSE CONTROLS, WHERE REQUIRED, ARE TO BE PROVIDED BY OTHERS.
3. DEMAND RESPONSE CONTROLS AND EQUIPMENT SHALL BE CAPABLE OF RECEIVING AND AUTOMATICALLY RESPONDING TO AT LEAST ONE STANDARD-BASED MESSAGING PROTOCOL WHICH ENABLES DEMAND RESPONSE AFTER RECEIVING A DEMAND SIGNAL.
4. SITE-SPECIFIC PROJECTS WHICH REQUIRE DEMAND RESPONSE CONTROLS MUST INCLUDE THE SUBMITTAL OF FORM NRCC-ELC-O1-E TO DSA (BY OTHERS).

GENERAL NOTES

- ELECTRICAL PANEL - MOUNT FLUSH WITH WALL FINISH, U.O.N.
- INCANDESCENT WALL MOUNTED INTERIOR LIGHT FIXTURE MODEL: 9850-LED, 10W MAX
- EXTERIOR LIGHT FIXTURE @ EACH DOOR, LED OR EQUAL (MAX 40W) - WHERE THERE ARE TWO OR MORE EXITS, A MINIMUM 90 MIN. BATTERY BACK-UP IS REQUIRED
- EXTERIOR SOFFIT MOUNTED LIGHT FIXTURE ENERTRON MODEL 110BSH2X7LED-50 LOW PROFILE CANOPY, LED OR EQUAL (MAX 16W)
- UNCONTROLLED-DUPLEX WALL CONVENIENCE OUTLET - MOUNT @ +18" A.F.F. TO CENTERLINE, U.O.N.
- CONTROLLED-DUPLEX WALL CONVENIENCE OUTLET - MOUNT @ +18" A.F.F. TO CENTERLINE, U.O.N. - TO BE CONTROLLED BY OCCUPANCY SENSOR.
- COMBO-DUPLEX WALL CONVENIENCE OUTLET - MOUNT @ +18" A.F.F. TO CENTERLINE, U.O.N.
- FOURPLEX WALL OUTLET - MOUNT @ +18" A.F.F. TO CENTER LINE - U.O.N.
- WP/GFCI — WEATHER-PROOF GROUND FAULT CIRCUIT INTERRUPT OUTLET - MOUNT @ 18" A.F.F. TO CENTERLINE - U.O.N.
- GFCI — GROUND FAULT CIRCUIT INTERRUPT OUTLET - MOUNT @ 18" A.F.F. TO CENTERLINE - U.O.N.
- $ — CONTROLLED-SINGLE POLE LIGHT SWITCHES - MOUNT @ +48" A.F.F. MAX TO TOP OF BOX - HUBBELL PREMIUM, BRYANT HEAVY DUTY, OR LEVITON SPECIFICATIONS GRADE.
- $S — SINGLE POLE SOLA-TUBE SWITCH - MOUNT @ +48" A.F.F. MAX TO TOP OF BOX.
- $T — SPRING WOUND COUNTDOWN TIMER, 125-277 VAC, 50/60 Hz, DSPT, 60 MINUTE MAX, ITEM FD460MW OR EQUAL. - MOUNT @ +48" A.F.F. MAX TO TOP OF BOX.
- a — SWITCH SUBSCRIPTS - a=DEVICE CONTROLLED.
- T — THERMOSTAT - TOP OF BOX MOUNTED @ +48" A.F.F.
- J — JUNCTION BOX - SIZE / LOCATION A.F.F. / TYPE AS NOTED
- J — ELECTRICAL CROSSOVER - J-BOX - ABOVE CEILING - #1- 4"x1", #22- 4"x2"
- CLOCK/SPEAKER COMBO - MOUNT @ +90" A.F.F. TO CENTERLINE - U.O.N. - DEVICE BY OTHERS
- S — SPEAKER - OUTLET ONLY - 4" SQ. BOX WITH SINGLE DEVICE RING AND COVER - MOUNT @ +84" A.F.F. TO CENTERLINE - DEVICE BY OTHERS
- DATA/COMMUNICATION - OUTLET ONLY - 4" SQ BOX WITH SINGLE DEVICE RING AND COVER - MOUNT @ +18" A.F.F. TO CENTERLINE, U.O.N., AND PROVIDE A 3/4" CONDUIT STUBBED ABOVE CEILING - DEVICE BY OTHERS
- CATV — CATV OUTLET - OUTLET ONLY - PROVIDE (1) 4" SQ. BOX WITH SINGLE DEVICE RING AND COVER - (1) 3/4" DIA CONDUIT - STUBBED ABOVE CEILING - DEVICES BY OTHERS
- INTERCOM/TELEPHONE - OUTLET ONLY - 4" SQ. BOX WITH SINGLE DEVICE RING AND COVER - MOUNT TOP OF BOX @ +48" A.F.F. U.O.N. AND PROVIDE A 3/4" CONDUIT STUBBED ABOVE CEILING - DEVICE BY OTHERS
- S — SECURITY/INTRUSION KEY PAD - OUTLET ONLY - 4" SQ. BOX w/ SINGLE DEVICE RING AND COVER, MOUNT TOP OF BOX @ +48" A.F.F., AND ONE 3/4" CONDUIT STUBBED ABOVE CEILING - DEVICE BY OTHERS
- DC — DOOR CONTACT - PROVIDE (1) EMPTY 1/2" DIA EMT THROUGH DOOR HEADER - STUBBED ABOVE CEILING - DEVICE BY OTHERS
- M — MOTION SENSOR OUTLET - PROVIDE (1) 4" SQ. BOX WITH SINGLE DEVICE RING AND COVER AND ONE 3/4" CONDUIT STUBBED ABOVE CEILING
- ULTRASONIC OCCUPANCY SENSOR - MOUNTED TO FINISH CEILING (PROVIDE WITH COMBINATION PHOTOCELL SENSOR WHEN DAYLIT CONTROLS ARE REQUIRED)
- 2'x4' LED EDGE FIT FIXTURE, MODEL: LSI, SFP24 5601K LUMENS - 45 WATTS MAX OR EQUAL
- 2'x2' LED EDGE FIT FIXTURE, MODEL: LSI, SFP22 3163K LUMENS - 30 WATTS MAX OR EQUAL
- 24 HOUR EMERGENCY LIGHTING WITH MINIMUM 90-MINUTE BATTERY BACK-UP - WHERE TWO OR MORE EXITS ARE REQUIRED
- E — EMERGENCY EXIT LIGHT, - WHERE THERE ARE TWO OR MORE EXITS, AN EXIT SIGN WITH INTEGRAL EMERGENCY LIGHTING W/MINIMUM 90-MINUTE BATTERY BACK-UP IS REQUIRED.
- E — ILLUMINATED EXIT LIGHT, - WHERE THERE ARE TWO OR MORE EXITS
- EXTERIOR SOFFIT MOUNTED LIGHTING PER MODEL ABOVE WITH EMERGENCY 90 MIN. MINIMUM BATTERY BACK-UP, PROVIDE (1) BY THE STAIR LANDINGS.
- CO — CO2 SENSOR - SEE NOTES IN SHEETS M1.1A, M1.1B & M1.1C

STANDARD ELECTRICAL SYMBOLS

IDENTIFICATION STAMP
DIV. OF THE STATE ARCHITECT
APP: 03-124589 INC:
REVIEWED FOR
SS ☑ FLS ☑ ACS ☑
DATE: 04/15/2025

American Modular Systems
787 Spreckels Ave., Manteca, CA 95336
Phone (209) 825-1921 Fax (209) 825-7018
www.americanmodular.com

INTELLECTUAL-PROPERTY & PROPRIETARY RIGHTS STATEMENT
COPYRIGHT © AMERICAN MODULAR SYSTEMS (AMS)
AMS OWNS ALL COPYRIGHT AND OTHER INTELLECTUAL-PROPERTY AND PROPRIETARY RIGHTS IN THESE DRAWINGS, SPECIFICATIONS, AND THE MATERIAL CONTAINED HEREIN. CERTAIN ELEMENTS SHOWN IN THESE DOCUMENTS ARE REGISTERED TRADEMARKS OF AMS. ALL PATENTABLE MATERIALS CONTAINED IN THESE DOCUMENTS AND ORIGINATING WITH AMS WILL REMAIN THE SOLE PROPERTY OF AMS. THESE DRAWING, SPECIFICATIONS, AND THE MATERIAL CONTAINED HEREIN MAY NOT BE REPRODUCED, TRANSMITTED, COPIED, DISTRIBUTED, MODIFIED, OR OTHERWISE DISPOSED OF (DIRECTLY OR INDIRECTLY) AND MAY NOT BE USED (IN WHOLE OR IN PART) TO ASSIST IN THE CONSTRUCTION, DESIGN, OR OTHER MAKING OF, OR FOR THE PURPOSE OF FURNISHING ANY INFORMATION FOR THE CONSTRUCTION, DESIGN, OR OTHER MAKING OF, ANY BUILDINGS (MODULAR OR OTHERWISE), DRAWINGS, SPECIFICATIONS, PRINTS, APPARATUS, OR PARTS THEREOF, EXCEPT AS EXPRESSLY PERMITTED BY WRITTEN CONSENT OF, OR IN A WRITTEN AGREEMENT WITH, AMS. SUBMITTAL OR DISTRIBUTION TO MEET OFFICIAL REGULATORY REQUIREMENTS WILL NOT BE CONSTRUED AS PUBLICATION IN DEROGATION OF AMS'S COPYRIGHT OR OTHER INTELLECTUAL-PROPERTY OR PROPRIETARY RIGHTS.

PRE-CHECKED SET NAME
24' x 40' THRU 120' x 40' STANDARD MODULAR BUILDING (HIGH SEISMIC)
FORM

SITE SPECIFIC PROJECT NAME
.
.
.

APPROVED
DIV. OF THE STATE ARCHITECT
APP: 04-122051 PC
REVIEWED FOR
SS ☑ FLS ☑ ACS ☑ CG ☑
DATE: 04/03/2024

☐ 2022 CBC PRE-CHECK (PC) DOCUMENT
A SEPARATE PROJECT APPLICATION FOR CONSTRUCTION IS REQUIRED.

MANUFACTURER PROFESSIONAL OF RECORD ON PC
LICENSED ARCHITECT — RANDALL PATRICK CAVANAGH — No. C12631 — Ren. 3-31-25 — STATE OF CALIFORNIA

THESE DRAWINGS ARE PRELIMINARY AND NOT FOR CONSTRUCTION UNLESS STAMPED & SIGNED BY THE DESIGN PROFESSIONAL OF RECORD.

REVISIONS
1
2
3
4

DRAWN BY:	AA
SCALE:	AS NOTED
DATE:	MM/DD/YY
PROJECT NO:	XXXX-22

SHEET TITLE:
TYPICAL ELECTRICAL PLAN

SHEET NUMBER:
E1.0

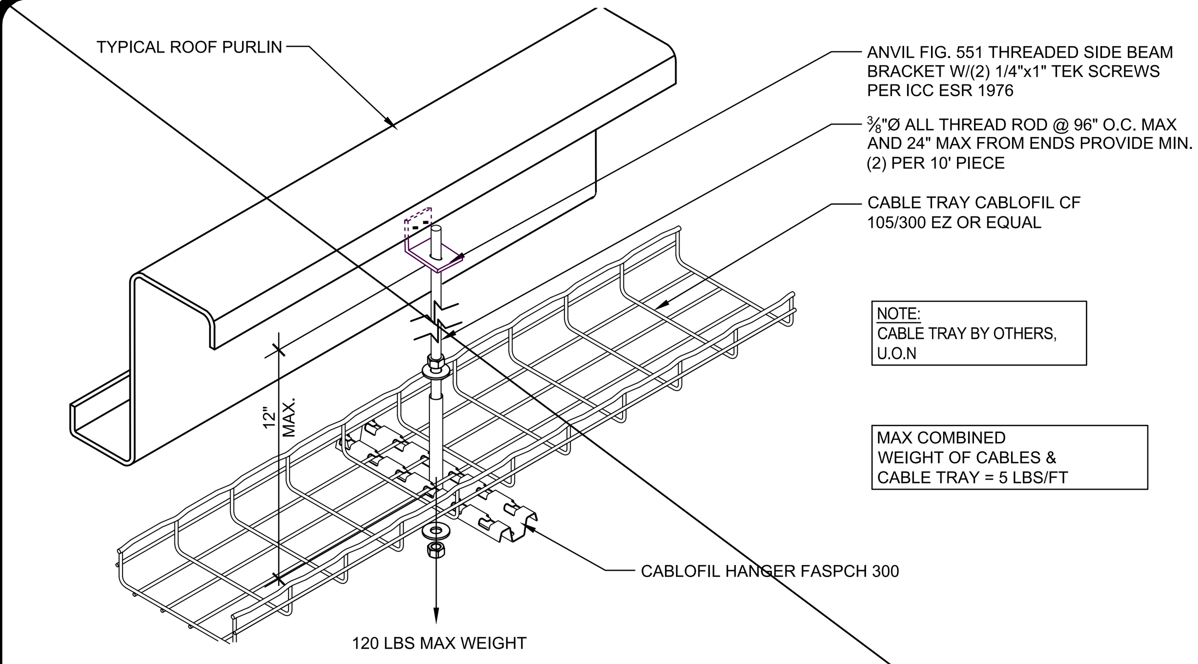

CABLE TRAY DETAIL — SCALE: N.T.S. — 1

250.52 GROUNDING ELECTRODES.

250.52(A) ELECTRODES PERMITTED FOR GROUNDING.

(1) METAL UNDERGROUND WATER PIPE. A METAL UNDERGROUND WATER PIPE IN DIRECT CONTACT WITH THE EARTH FOR 3.0 M (10 FT) OR MORE (INCLUDING ANY METAL WELL CASING BONDED TO THE PIPE) AND ELECTRICALLY CONTINUOUS (OR MADE ELECTRICALLY CONTINUOUS BY BONDING AROUND INSULATING JOINTS OR INSULATING PIPE) TO THE POINTS OF CONNECTION OF THE GROUNDING ELECTRODE CONDUCTOR AND THE BONDING CONDUCTOR(S) OR JUMPER(S), IF INSTALLED.

(2) METAL IN-GROUND SUPPORT STRUCTURE(S). ONE OR MORE METAL IN-GROUND SUPPORT STRUCTURE(S) IN DIRECT CONTACT WITH THE EARTH VERTICALLY FOR 3.0 M (10 FT) OR MORE, WITH OR WITHOUT CONCRETE ENCASEMENT. IF MULTIPLE METAL IN-GROUND SUPPORT STRUCTURES ARE PRESENT AT A BUILDING OR A STRUCTURE, IT SHALL BE PERMISSIBLE TO BOND ONLY ONE INTO THE GROUNDING ELECTRODE SYSTEM.

INFORMATIONAL NOTE: METAL IN-GROUND SUPPORT STRUCTURES INCLUDE, BUT ARE NOT LIMITED TO, PILINGS, CASINGS, AND OTHER STRUCTURAL METAL.

(3) CONCRETE-ENCASED ELECTRODE. A CONCRETE-ENCASED ELECTRODE SHALL CONSIST OF AT LEAST 6.0 M (20 FT) OF EITHER (1) OR (2):

(1) ONE OR MORE BARE OR ZINC GALVANIZED OR OTHER ELECTRICALLY CONDUCTIVE COATED STEEL REINFORCING BARS OR RODS OF NOT LESS THAN 13 MM (1⁄2 IN.) IN DIAMETER, INSTALLED IN ONE CONTINUOUS 6.0 M (20 FT) LENGTH, OR IF IN MULTIPLE PIECES CONNECTED TOGETHER BY THE USUAL STEEL TIE WIRES, EXOTHERMIC WELDING, WELDING, OR OTHER EFFECTIVE MEANS TO CREATE A 6.0 M (20 FT) OR GREATER LENGTH; OR

(2) BARE COPPER CONDUCTOR NOT SMALLER THAN 4 AWG

METALLIC COMPONENTS SHALL BE ENCASED BY AT LEAST 50 MM (2 IN.) OF CONCRETE AND SHALL BE LOCATED HORIZONTALLY WITHIN THAT PORTION OF A CONCRETE FOUNDATION OR FOOTING THAT IS IN DIRECT CONTACT WITH THE EARTH OR WITHIN VERTICAL FOUNDATIONS OR STRUCTURAL COMPONENTS OR MEMBERS THAT ARE IN DIRECT CONTACT WITH THE EARTH. IF MULTIPLE CONCRETE-ENCASED ELECTRODES ARE PRESENT AT A BUILDING OR STRUCTURE, IT SHALL BE PERMISSIBLE TO BOND ONLY ONE INTO THE GROUNDING ELECTRODE SYSTEM.

INFORMATIONAL NOTE: CONCRETE INSTALLED WITH INSULATION, VAPOR BARRIERS, FILMS OR SIMILAR ITEMS SEPARATING THE CONCRETE FROM THE EARTH IS NOT CONSIDERED TO BE IN "DIRECT CONTACT" WITH THE EARTH.

(4) GROUND RING. A GROUND RING ENCIRCLING THE BUILDING OR STRUCTURE, IN DIRECT CONTACT WITH THE EARTH, CONSISTING OF AT LEAST 6.0 M (20 FT) OF BARE COPPER CONDUCTOR NOT SMALLER THAN 2 AWG.

(5) ROD AND PIPE ELECTRODES. ROD AND PIPE ELECTRODES SHALL NOT BE LESS THAN 2.44 M (8 FT) IN LENGTH AND SHALL CONSIST OF THE FOLLOWING MATERIALS.

(A) GROUNDING ELECTRODES OF PIPE OR CONDUIT SHALL NOT BE SMALLER THAN METRIC DESIGNATOR 21 (TRADE SIZE 3⁄4) AND, WHERE OF STEEL, SHALL HAVE THE OUTER SURFACE GALVANIZED OR OTHERWISE METAL-COATED FOR CORROSION PROTECTION.

(B) ROD-TYPE GROUNDING ELECTRODES OF STAINLESS STEEL AND COPPER OR ZINC COATED STEEL SHALL BE AT LEAST 15.87 MM (5⁄8 IN.) IN DIAMETER, UNLESS LISTED.

(6) OTHER LISTED ELECTRODES. OTHER LISTED GROUNDING ELECTRODES SHALL BE PERMITTED.

(7) PLATE ELECTRODES. EACH PLATE ELECTRODE SHALL EXPOSE NOT LESS THAN 0.186 M2 (2 FT2) OF SURFACE TO EXTERIOR SOIL. ELECTRODES OF BARE OR ELECTRICALLY CONDUCTIVE COATED IRON OR STEEL PLATES SHALL BE AT LEAST 6.4 MM (1⁄4 IN.) IN THICKNESS. SOLID, UNCOATED ELECTRODES OF NONFERROUS METAL SHALL BE AT LEAST 1.5 MM (0.06 IN.) IN THICKNESS.

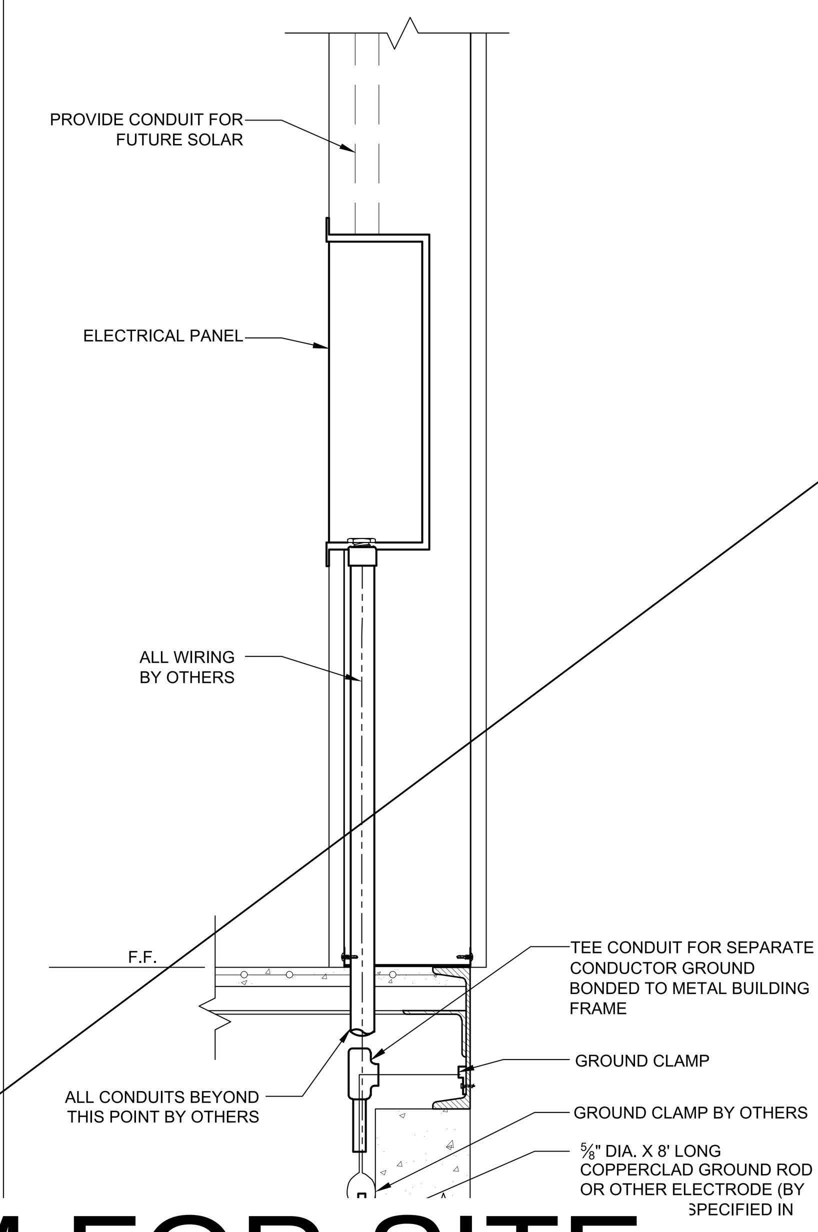

SEE SHEET E1.2-M FOR SITE SPECIFIC SHEET

BY ...NCE EXCEEDS 25 OHMS, INSTALL ADDITIONAL GROUND RODS (CEC) AS REQUIRED. GROUNDING DETAIL PER DSA IR E-1. INSPECTOR TO WITNESS GROUNDING TEST.

NOT USED — 2

ELECTRICAL PANEL CONNECTION DETAIL - UNDERFLOOR OPTION — SCALE: 1-1/2" = 1' - 0" — 3

PANEL: A S/N:	PHASE: SINGLE			VOLTS: 120/240		BUSS: 125 AMP			MAIN: 100				LOCATION: INTERIOR			FEED: BOTTOM				MOUNTING: SURFACE	
OBJECT DESCRIPTION	WATT PER	NO. OF	LCL	WATTS A	WATTS B	BRK	POLE	WIRE SIZE	CKT NO	LEG A	LEG B	CKT NO	WIRE SIZE	POLE	BRK	WATTS A	WATTS B	LCL	NO OF	WATTS PER	OBJECT DESCRIPTION
INT. LIGHTS-LED	40	8	x	320		20	1	#12	1	X		2	#6	1	60	5760		x	/	5760	4 TON A/C HVAC UNIT
BLANK/SPARE					0				3		X	4	#6	1	60		5760	x	/	5760	4 TON A/C HVAC UNIT
EXT. LIGHTS	75	1	x	75		20	1	#12	5	X		6				0				*	F.A.C.P.
REC-CONTROLLED	180	1	x		180	20	1	#12	7		X	8					0			*	FUTURE SOLAR ELEC
REC-UNCONTROLLED	180	1	x	180		20	1	#12	9	X		10				0					BLANK/SPARE
REC-GFIC	180	1	x		180	20	1	#12	11		X	12					0				BLANK/SPARE
	LEG TOTALS			575	360											5760	5760	LEG TOTALS			
LCL=3113.75+12455=15568.75																					
TOTAL WATTS=15568.75						LEG BALANCE = 1.7%										TOTAL AMPS: 64.87					

NOTE:
FIRE ALARM DEDICATED CIRCUIT SHALL BE IDENTIFIED WITH A RED MARKED DISCONNECT WITH LOCK-ON CAPABILITY (NFPA 72 10.6.5.2)

LOAD PANEL CALCULATIONS

FIRE ALARM SYSTEM

1. THE FIRE ALARM SYSTEM SHALL CONFORM TO THE CALIFORNIA ELECTRICAL CODE, CALIFORNIA FIRE CODE AND THE CALIFORNIA BUILDING CODE.
2. INSTALLATION OF THE FIRE ALARM SYSTEM SHALL NOT BE STARTED UNTIL DETAILED PLANS AND SPECIFICATIONS, INCLUDING CALIFORNIA STATE FIRE MARSHAL LISTINGS FOR EACH COMPONENT OF THE SYSTEM, HAVE BEEN APPROVED BY DSA.
3. UPON COMPLETION OF THE INSTALLATION OF THE FIRE ALARM SYSTEM, A SATISFACTORY TEST OF THE ENTIRE SYSTEM SHALL BE MADE IN THE PRESENCE OF THE ENFORCING AGENCY.
4. JUNCTION BOXES - GALVANIZED SHEET METAL, SQUARE OR RECTANGULAR WITH BLANK COVERS. LOCATE ONE BOX AT REAR OF BUILDING NEAR MAIN ELECTRICAL PANEL @ +18" ABOVE FINISH FLOOR FOR FUTURE CONNECTION.
5. COVERS - INSTALL GASKETED, METAL, WATERPROOF, FINISH COVERS AT EXTERIOR LOCATIONS. INSTALL FINISH COVERS AT INTERIOR LOCATIONS.
6. THE AUTOMATIC ALARM SYSTEM SHALL BE INSTALLED, TESTED, AND MAINTAINED IN ACCORDANCE WITH THE STATE FIRE MARSHALL'S REGULATIONS (CBC SEC. 907.2.3) AND THE 2016 EDITION OF NFPA 72.
7. THE LOCATION OF AUTOMATIC DETECTORS, MANUAL STATIONS AND OTHER FIRE ALARM EQUIPMENT AND DEVICES, AS SHOWN ON PLAN, ARE FOR REFERENCE ONLY AND DO NOT CONSTITUTE SHOP DRAWINGS WHICH ARE REQUIRED FOR REVIEW AND APPROVAL.
8. ALARM-INDICATING DEVICES OF A FIRE ALARM SYSTEM INTENDED TO ALERT ALL OCCUPANTS SHALL CAUSE A LEVEL OF AUDIBILITY OF NOT LESS THAN 15 dBA ABOVE THE AVERAGE AMBIENT NOISE LEVELS OR 5dBA ABOVE THE MAXIMUM SOUND LEVEL HAVING A DURATION OF 60 SECONDS, WHICHEVER IS GREATER, MEASURED 5' ABOVE THE FLOOR. AMBIENT NOISE LEVELS MEANS THE LEVEL WHICH CAN NORMALLY BE EXPECTED WHEN THE FACILITY, BUILDING, ROOM, OR AREA IS FUNCTIONING UNDER NORMAL OPERATING OR WORKING CONDITIONS (NFPA 72, SEC. 18.4.1).
9. THE ALARM SYSTEM SHALL ACTIVATE A MEANS OF WARNING THE HEARING IMPAIRED. FLASHING VISUAL WARNINGS SHALL HAVE A FLASH RATE NOT EXCEEDING TWO FLASHES PER SECOND (2 HZ), NOR BE LESS THAN ONE FLASH EVERY SECOND (1 HZ). STROBE SIGNALING DEVICES FOR THE HEARING IMPAIRED SHALL BE STATE FIRE MARSHALL APPROVED AND LISTED (NFPA 72, SEC. 18.5.3).
10. AUTOMATIC FIRE ALARM SYSTEM SHALL TRANSMIT THE ALARM, SUPERVISORY AND TROUBLE SIGNALS TO AN APPROVED SUPERVISING STATION AS REQUIRED BY NFPA 72 CHAPTER 26 AS AMENDED BY ARTICLE 91. THE SUPERVISING STATION SHALL BE LISTED AS EITHER UUFX OR UUJS BY UNDERWRITERS LABORATORY OR SHALL MEET THE REQUIREMENTS OF FACTORY MUTUAL RESEARCH APPROVAL STANDARD 3011. SUPERVISION OF SYSTEM AND LEASED TELEPHONE LINES SHALL BE ARRANGED BY OWNER. IF TESTING RESULTS DETERMINE FIRE ALARM AUDIBILITY DOES NOT MEET 15db OVER AMBIENT NOISE LEVELS, ADDITIONAL FIRE ALARM SIGNALING DEVICES MAY BE REQUIRED BY THE ENFORCING AGENCY.

NOTE:
SEE SHEET M1.0 FOR ALL BRACING AND ANCHORAGE NOTES.

GENERAL NOTES

1. GROUNDING ELECTRODE CONDUCTOR SIZED PER CEC.
2. PROVIDE BONDS TO BLDG. STEEL & PANEL (#8 CU)
3. PANEL TO LISTED FOR USE AS SERVICE EQUIPMENT.
4. ALL PANELS, SWITCHES, DISCONNECTS, BREAKERS, METERS, AND OTHER ELECTRICAL ELEMENTS SHALL BE PLACED ABOVE THE ELEVATION REQUIRED BY ASCE 24-14, SECTION 7.2.
5. WHERE FLEXIBLE CONDUIT IS PASSING BETWEEN BUILDING SEPARATION JOINTS, PROVIDE SUFFICIENT LENGTH OF CONDUIT TO PERMIT DIFFERENTIAL DISPLACEMENTS BETWEEN BUILDINGS IN COMPLIANCE WITH ASCE 7 SECTION 13.6.9 & DSA IR PC-2 SECTION 1.18. ADDITIONAL CONDUIT & JOINT DETAIL SHALL BE PROVIDED BY OTHERS.

FIXTURE NOTES:

1. ALL FLUORESCENT LIGHT FIXTURES SHALL HAVE ENERGY SAVING LAMPS AND BALLASTS.
2. LUMINARIES/BALLASTS SHALL BE CERTIFIED PER CALIFORNIA BUILDING CODE, TITLE 24.
3. FLUORESCENT LIGHT FIXTURE TYPE "A" SHALL BE CONTROLLED TO PROVIDE TWO LEVELS OF LIGHTING. SWITCH (SA) SHALL CONTROL THE TWO OUTER LAMPS AND SWITCH (SB) SHALL CONTROL THE TWO INNER LAMPS.
4. ELECTRICAL SERVICE DROP AND CONNECTIONS SUPPLIED BY OTHERS.
5. MANUFACTURER TO PROVIDE STUB-OUT FROM BACK OF ELECTRICAL PANEL THROUGH THE EXTERIOR WALL OR TO BELOW FLOOR FOR RECEIVING EITHER UNDERGROUND OR OVERHEAD SERVICE & FITTING FOR GROUNDING CABLE.
6. ELECTRICAL PANEL BOARD SHALL BE RECESS MOUNTED INSIDE THE BUILDING, SIZED TO ACCOMMODATE ALL CONNECTED LOADS INCLUDING SPACES AS SHOWN. OVERCURRENT PROTECTIVE DEVICES IN THE PANEL BOARDS SHALL HAVE ADEQUATE SHORT CIRCUIT INTERRUPTING CAPACITY. ALL BUSES INCLUDING BUS SHALL BE COPPER OR ALUMINUM.
7. 2X4 FLUORESCENT FIXTURES SHALL HAVE A STEEL FRAME, LENS SHALL BE HINGED AND LOCKED IN PLACE BY TWO LOCKING DEVICES. THE LENS DIFFUSERS SHALL BE KHS, INC. #KSH-2, CAROLITE, INC. #C-12 OR PLASKOLITE, INC. #PL21A. MINIMUM LENS THICKNESS SHALL BE 0.125 INCHES.
8. FLUORESCENT BALLAST SHALL BE ENERGY SAVER WHILE MAINTAINING FULL LIGHT OUTPUT, CLASS "P" EQUIPPED WITH THERMAL PROTECTORS, GUARANTEED AGAINST FAILURE FOR (2) YEARS AND BE REPLACEABLE FROM INSIDE THE FIXTURE.
9. CLOCK - 12" DIAL CLOCK ON CLOCK OUTLET.
   A. CLOCK SHALL BE GENERAL ELECTRIC MODEL 2912 129V 60 CYCLE
   B. CLOCK OUTLET SHALL BE BRYANT #2828 OR EQUAL WITH SEPARABLE HANGING CLIP & APP'D RECEPT. THE H.V.A.C. UNIT FEEDER CIRCUIT - PANEL CIRCUIT BREAKER, FEEDER WIRE, UNIT DISCONNECT AND FUSES (WHERE USED) - IS TO BE COORDINATED WITH THE NAME PLATE DATA AT THE TIME OF MANUFACTURE. H.V.A.C. UNITS HAVING KVA RATINGS LARGER THAN THAT INDICATED ON THIS PANEL SCHEDULE WILL NOT BE ALLOWED TO BE INSTALLED ON THIS BUILDING.
   C. IF 60 DEGREES WIRE IS TO BE USED IN THIS INSTALLATION, CALCULATIONS DEMONSTRATING AMPACITY SHALL BE PROVIDED ON THE DRAWING.

GENERAL NOTES

IDENTIFICATION STAMP
DIV. OF THE STATE ARCHITECT
APP: 03-124589 INC:
REVIEWED FOR
SS ☑ FLS ☑ ACS ☑
DATE: 04/15/2025

AMS®
American Modular Systems
787 Spreckels Ave., Manteca, CA 95336
Phone (209) 825-1921 Fax (209) 825-7018
www.americanmodular.com

INTELLECTUAL-PROPERTY & PROPRIETARY RIGHTS STATEMENT
COPYRIGHT © AMERICAN MODULAR SYSTEMS (AMS)
AMS OWNS ALL COPYRIGHT AND OTHER INTELLECTUAL-PROPERTY AND PROPRIETARY RIGHTS IN THESE DRAWINGS, SPECIFICATIONS, AND THE MATERIAL CONTAINED HEREIN. CERTAIN ELEMENTS SHOWN IN THESE DOCUMENTS ARE REGISTERED TRADEMARKS OF AMS. ALL PATENTABLE MATERIALS CONTAINED IN THESE DOCUMENTS AND ORIGINATING WITH AMS WILL REMAIN THE SOLE PROPERTY OF AMS. THESE DRAWING, SPECIFICATIONS, AND THE MATERIAL CONTAINED HEREIN MAY NOT BE REPRODUCED, TRANSMITTED, COPIED, DISTRIBUTED, MODIFIED, OR OTHERWISE DISPOSED OF (DIRECTLY OR INDIRECTLY) AND MAY NOT BE USED (IN WHOLE OR IN PART) TO ASSIST IN THE CONSTRUCTION, DESIGN, OR OTHER MAKING OF, OR FOR THE PURPOSE OF FURNISHING ANY INFORMATION FOR THE CONSTRUCTION, DESIGN, OR OTHER MAKING OF, ANY BUILDINGS (MODULAR OR OTHERWISE), DRAWINGS, SPECIFICATIONS, PRINTS, APPARATUS, OR PARTS THEREOF, EXCEPT AS EXPRESSLY PERMITTED BY WRITTEN CONSENT OF, OR IN A WRITTEN AGREEMENT WITH, AMS. SUBMITTAL OR DISTRIBUTION TO MEET OFFICIAL REGULATORY REQUIREMENTS WILL NOT BE CONSTRUED AS PUBLICATION IN DEROGATION OF AMS'S COPYRIGHT OR OTHER INTELLECTUAL-PROPERTY OR PROPRIETARY RIGHTS.

PRE-CHECKED SET NAME
24' x 40' THRU 120' x 40' STANDARD MODULAR BUILDING (HIGH SEISMIC)
FORM®

SITE SPECIFIC PROJECT NAME
.
.
.

APPROVED
DIV. OF THE STATE ARCHITECT
APP: 04-122051 PC
REVIEWED FOR
SS ☑ FLS ☑ ACS ☑ CG ☑
DATE: 04/03/2024

☐ 2022 CBC PRE-CHECK (PC) DOCUMENT
A SEPARATE PROJECT APPLICATION FOR CONSTRUCTION IS REQUIRED.

MANUFACTURER PROFESSIONAL OF RECORD ON PC

LICENSED ARCHITECT
RANDAL PATRICK CAVANAGH
No. C12631
Ren. 3-31-25
STATE OF CALIFORNIA

THESE DRAWINGS ARE PRELIMINARY AND NOT FOR CONSTRUCTION UNLESS STAMPED & SIGNED BY THE DESIGN PROFESSIONAL OF RECORD.

REVISIONS
1
2
3
4

DRAWN BY:	AA
SCALE:	AS NOTED
DATE:	MM/DD/YY
PROJECT NO:	XXXX-22

SHEET TITLE:
ELECTRICAL NOTES & DETAILS

SHEET NUMBER:
E1.2

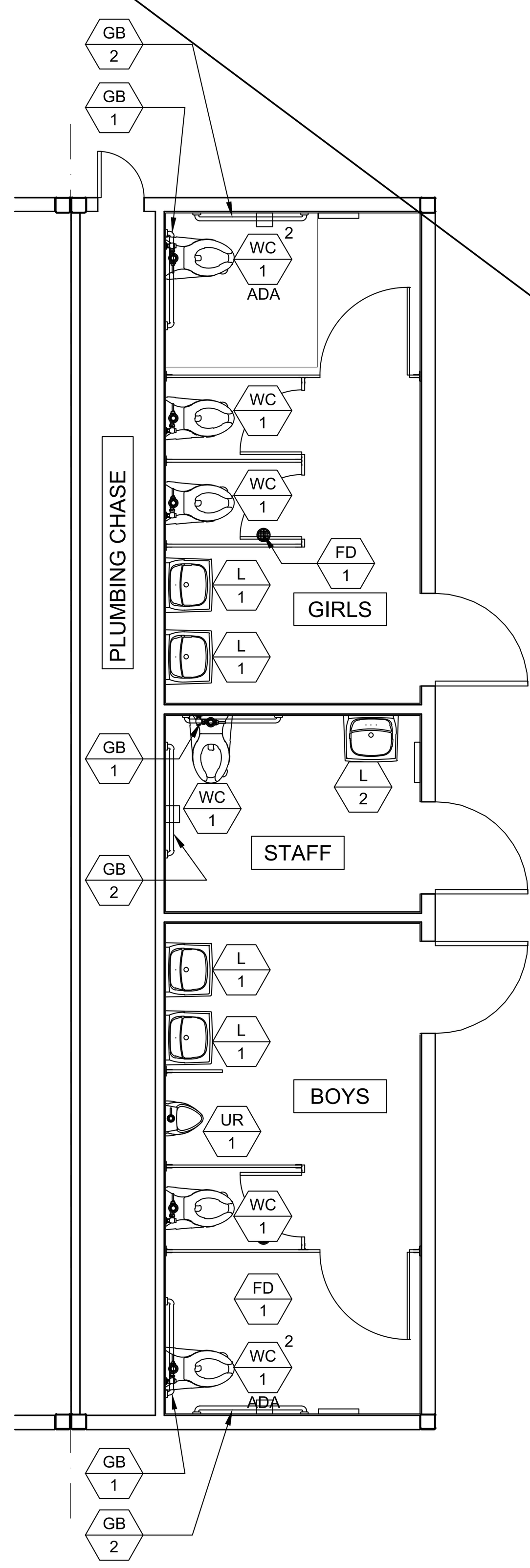

BOYS, GIRLS & STAFF R.R. PLAN SCALE: 1/4" = 1'-0" 1

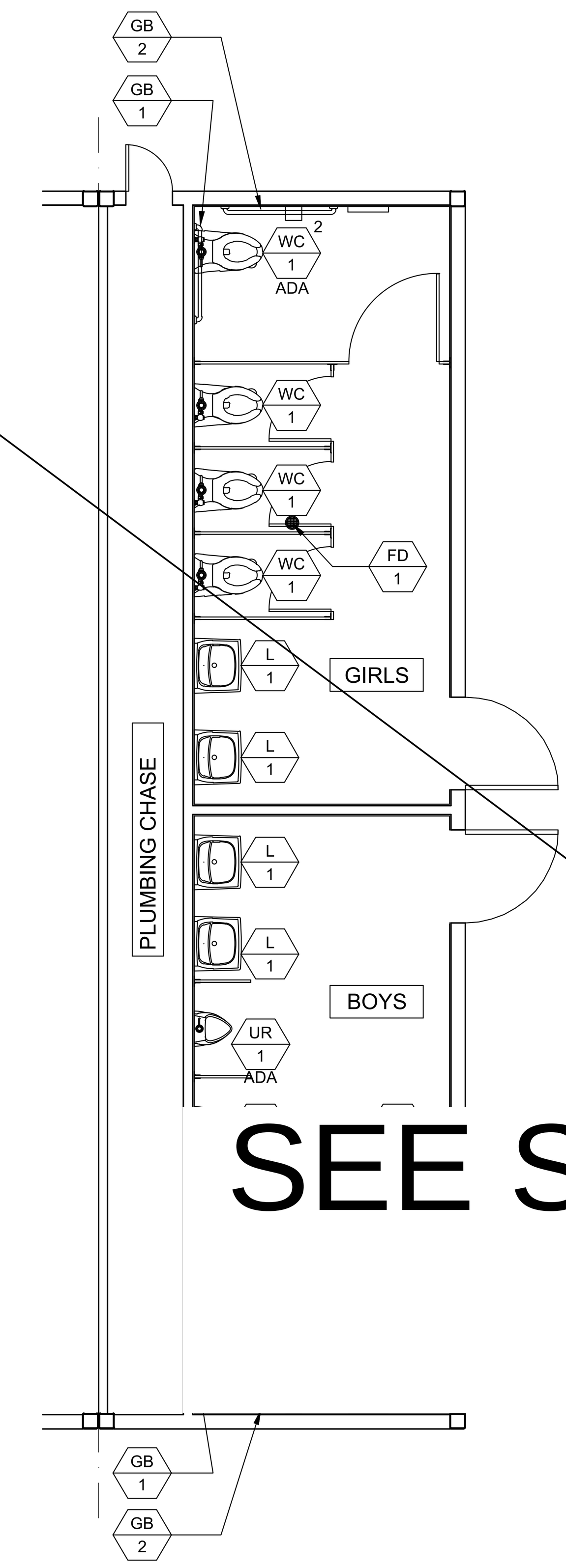

BOYS & GIRLS R.R. PLAN SCALE: 1/4" = 1'-0" 2

MARK	FIXTURE[1]	TYPE AT KINDERGARTEN (AGES 3-4)	TYPE AT ELEMENTARY (AGES 5-8)	TYPE AT MIDDLE SCHOOL (AGES 9-12)	TYPE AT HIGH SCHOOL (AGES 13-ADULT)	REMARKS
WC 1 [2] ACC	WALL MOUNT WATER CLOSET	CANNOT USE	CANNOT USE	KOHLER 'KINGSTON' MODEL K-4325 OR EQUAL. LOWEST AT 15" HIGHEST AT 17" A.F.F. TO TOP OF SEAT w/BEMIS 1955SSCT TOILET SEAT OR EQUAL	KOHLER 'KINGSTON' MODEL K-4325 OR EQUAL. LOWEST AT 17" A.F.F. 19" HIGHEST TO TOP OF SEAT w/BEMIS 1955SSCT TOILET SEAT OR EQUAL	FLUSH VALVE ZURN MODEL Z6000AV-HET - 1.28 G.P.F OR EQUAL. LOCATE AS SPECIFIED ON FLOOR PLANS. MOUNT ACCESSIBLE FIXTURES PER SCHEDULE 10/P2.0.
WC 2	FLOOR MOUNT TANK TYPE	AMERICAN STANDARD 4019 828 w/BEMIS 1955SSCT OR EQUAL TOILET SEAT	CANNOT USE	KOHLER 'WELLWORTH' MODEL K-3998 OR EQUALw/BEMIS 1955SSCT OR EQUAL TOILET SEAT	KOHLER 'WELLWORTH' MODEL K-3999 OR EQUAL w/BEMIS 1955SSCT OR EQUAL TOILET SEAT	WC/2 FIXTURE MAX FLOW RATE OF 1.28 G.P.F - LOCATE AS SPECIFIED ON FLOOR PLANS. MOUNT ACCESSIBLE FIXTURES PER SCHEDULE 10/P2.0
WC 3 ACC OPTIONAL	FLOOR MOUNT FLUSH VALVE	KOHLER 'PRIMARY' MODEL K-96064 OR EQUAL. w/BEMIS 1955SSCT TOILET SEAT OR EQUAL	KOHLER 'PRIMARY' MODEL K-96064 OR EQUAL w/2L205T (2" THICK) TOILET SEAT OR EQUAL	FLOOR MOUNT FLUSH VALVE TYPE KOHLER 'WELLCOMME ULTRA' MODEL K-96053 OR EQUAL w/BEMIS 1955SSCT OR EQUAL TOILET SEAT	FLOOR MOUNT FLUSH VALVE TYPE KOHLER 'HIGHCLIFF ULTRA' MODEL K-96057 OR EQUAL w/BEMIS 1955SSCT OR EQUAL TOILET SEAT	FLUSH VALVE ZURN MODEL Z6000AV-HET - 1.28 G.P.F OR EQUAL. LOCATE AS SPECIFIED ON FLOOR PLANS. MOUNT ACCESSIBLE FIXTURES PER SCHEDULE 10/P2.0.
L 1	BOYS/GIRLS LAVATORY	KOHLER 'KINGSTON' MODEL K-2007-0				BOY/GIRL RESTROOM - ZURN MODEL Z86100-XL-3M - COLD WATER ONLY - SINGLE SPOUT MOUNT AS SPECIFIED IN FLOOR PLANS. MOUNT ACCESSIBLE FIXTURES PER SCHEDULE 10/P2.0 - FLOW RATE OF 0.5 G.P.M. METER FAUCETS SHALL REMAIN OPEN FOR 10 SECONDS MIN.
L 2	ADULT LAVATORY	KOHLER 'KINGSTON' MODEL K-2005-0				ADULT RESTROOM - ZURN MODEL Z7440-XL-FC HOT/COLD WATER - 4" ON CENTER HOLE. MOUNT AS SPECIFIED IN FLOOR PLANS. MOUNT ACCESSIBLE FIXTURES PER SCHEDULE 10/P2.0 - FLOW RATE OF 0.5 G.P.M.
UR 1 ACC	URINAL	WALL MOUNT TYPE KOHLER MODEL DEXTER K-5452-ET-0 OR EQUAL FLOW RATE = 0.125 gpf				FLUSH VALVE ZURN MODEL Z6003-AV (0.125gpf) OR EQUAL. MOUNT AS SPECIFIED IN FLOOR PLANS. MOUNT ACCESSIBLE FIXTURES PER SCHEDULE 10/P2.0
M 1	MIRROR	WALL MOUNT TYPE BOBRICK MODEL B165 18X30 OR EQUAL				MOUNT AS SPECIFIED IN FLOOR PLANS. MOUNT ACCESSIBLE MIRROR PER SCHEDULE 10/P2.0
GB 1	36" GRAB BARS	WALL MOUNT TYPE MOEN MODEL 8736 & 8748 (1 1/4" CONCEALED SCREW 36"& 48") OR EQUAL				18 GA. 304 STAINLESS STEEL SATIN FINISH MOUNT AS SPECIFIED IN FLOOR PLANS AND PER SCHEDULE 10/P2.0. (STRUCTURAL STRENGTH OF GRAB BARS 250# MIN.)
GB 2	48" GRAB BARS					
WH 1	WATER HEATER	RHEEM 20 GALLON ELECTRIC WATER HEATER MODEL PROE20-1-RH-POU 240 VOLT SINGLE PHASE				AVAILABLE IN 6, 10, 20 AND 30 GALLON MODELS (MAX WATER HEATER WEIGHT) PER 6/M1.4 OR 1/P2.0
ITWH 1	INSTANT-TEMP WATER HEATER	CHRONOMITE INSTANT-TEMP WATER HEATER MODEL M20L/240 INSTANT SINGLE PHASE 104°				CHRONOMITE MODEL M20L/208 OR EQUAL SEE DETAIL 7/P2.0
FS	CUSTODIAN SINK	FLORESTONE FLOOR SINK MOLDED MOP RECEPTORS MODEL MSR 2424 W/ 3"				ZURN 843-MI-RC OR EQUAL
						CAITLIN CBK110CP OR EQUAL
						LOCATE AS SPECIFIED ON FLOOR PLANS. PROVIDE GRATE WITH MAX 1/2" OPENINGS, MEASURED IN BOTH DIRECTIONS
						LOCATE AS SPECIFIED ON FLOOR PLANS. (FLOOR DRAIN TO BE USED ON CONCRETE ONLY.) PROVIDE GRATE WITH MAX 1/2" OPENINGS, MEASURED IN BOTH DIRECTIONS
CS 1	CLASSROOM SINK	DAYTON MODEL D12521 25"x21-1/4" SINGLE BOWL SINK OR EQUAL				FAUCET - ZURN MODEL Z2871-B4-XL W/WRIST BLADES. LOCATE AS SPECIFIED ON FLOOR PLANS. MOUNT ACCESSIBLE FIXTURES PER SCHEDULE 10/P2.0
DF 1	DRINKING FOUNTAIN	ELKAY MODEL EDFP217C WALL MOUNT WATER FOUNTAIN OR EQUAL				
HB 1	HOSE BIBB	STANDARD HOSE BIBB ARROWHEAD MODEL 353LKLF OR EQUAL				LOCATE AS SPECIFIED ON FLOOR PLANS.

SEE SHEET P1.0-M FOR SITE SPECIFIC SHEET

NOTES:
1. ALL WATER FIXTURES MUST MEET REQUIREMENTS OF CAL-GREEN TITLE 24, PART 11, SECTION 5.303.3 "WATER CONSERVING PLUMBING FIXTURES & FITTINGS".
2. FOR OPTIONAL ACCESSIBLE FLOOR-MOUNT WATER CLOSET, SEE PLUMBING SCHEDULE MARK WC/3 (NOT SHOWN ON PLAN).
3. NOT ALL ITEMS LISTED MAY OCCUR IN THIS PROJECT.
4. THERE SHOULD BE NO SHARP OR ABRASIVE SURFACES UNDER LAVS OR SINKS.
5. REFER TO DETAIL 10/P2.0 FOR SCHEDULE OF ACCESSIBLE HEIGHTS AT FIXTURES.

PLUMBING FIXTURE SCHEDULE

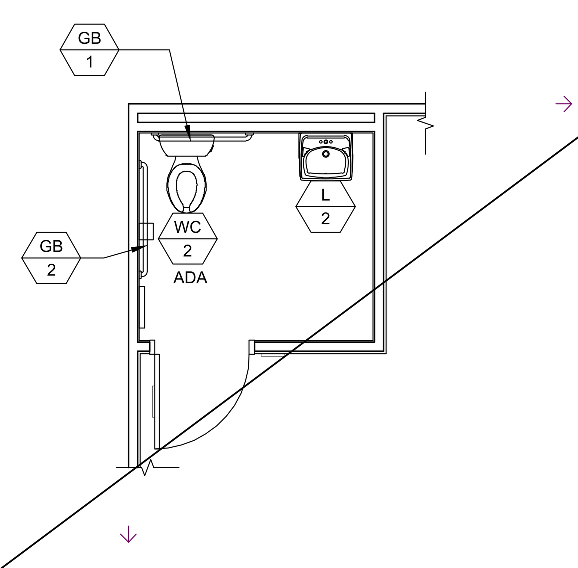

SINGLE TOILET PLAN
FRONT WALL APPROACH SCALE: 1/4" = 1'-0" 6

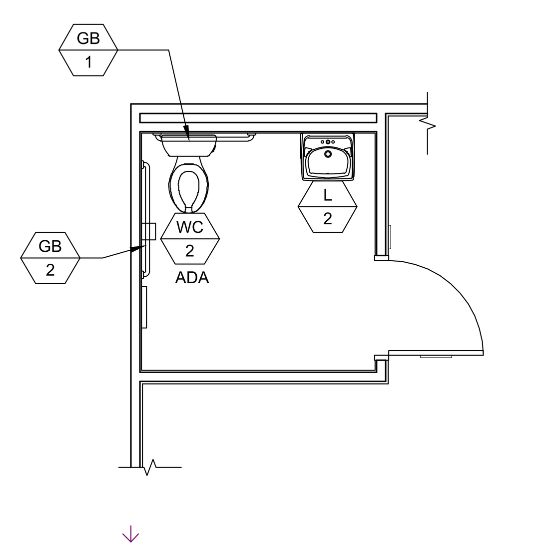

SINGLE TOILET PLAN
SIDE WALL APPROACH SCALE: 1/4" = 1'-0" 7

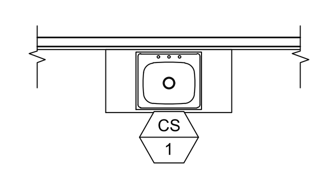

CLASSROOM SINK PLAN SCALE: 1/4" = 1'-0" 8

A 1 = PLUMBING FIXTURE I.D. - SEE SCHEDULE ABOVE

SYMBOLS LEGEND

PLANS SHALL MEET ENERGY CODE 120.3 FOR PIPE INSULATION. ALL WATER HEATERS SHALL HAVE R7.7 ON HOT AND COLD LINES FOR THE FIRST 8 FEET FROM WATER HEATER (TANK TYPE AND INSTANT). SECTION 609.12 REQUIRES HOT WATER PIPING FROM THE WATER HEATER TO THE FIXTURE (CONTROL VALVE) BE INSULATED TO A MINIMUM WALL THICKNESS OF NOT LESS THAN THE DIAMETER OF THE PIPE FOR A PIPE UP TO 2 INCHES (50 MM) IN DIAMETER. INSULATION WALL THICKNESS SHALL BE NOT LESS THAN 2 INCHES (51 MM) FOR A PIPE OF 2 INCHES (50 MM) OR MORE IN DIAMETER. PER PLUMBING CODE 609.12 UPDATE PLANS TO SHOW HOW THE HOT WATER PIPING IS INSULATED FROM THE WATER HEATER TO THE FIXTURE (CONTROL VALVE) TO A MINIMUM WALL THICKNESS OF NOT LESS THAN THE DIAMETER OF THE PIPE. INSTANTANEOUS WATER HEATERS WITH AN INPUT GREATER THAN 6.8 KBTU/H OR 2 KW (ALL INSTANTANEOUS ARE OVER 4KW) SHALL HAVE ISOLATION VALVES ON BOTH THE INCOMING COLD WATER SUPPLY AND THE HOT WATER PIPE LEAVING THE WATER HEATER, TO ASSIST IN THE FLUSHING OF THE HEAT EXCHANGER AND HELP PROLONG THE LIFE OF THE WATER HEATERS PER ENERGY CODE 110.3(C).

PLUMBING NOTE

MODULAR MFR. TO STUB THROUGH FLOOR ALL PLUMBING LINES. BUILDING PERIMETER POC'S SHOWN ARE FOR COORDINATION PURPOSES ONLY. ALL UNDER-FLOOR CONNECTIONS ARE BY SITE CONTRACTOR, U.O.N.

1. DIMENSIONS ARE TO FACE OF FINISH (F.O.F.) UNLESS NOTED OTHERWISE (i.e. F.O.C., ℄)
2. RESTROOM CONFIGURATION MAY VARY PER BUILDING CONFIGURATION.
3. RESTROOM MODULE OCCURS ONLY AT END OF BUILDING. SINGLE RESTROOMS MAY OCCUR IN ANY PART OF A BUILDING.
4. RESTROOM MODULE CANNOT STAND ALONE AND SHALL BE ASSEMBLED TOGETHER WITH AT LEAST ONE OTHER 12'x40' MODULE.
5. INTERIOR WALLS MAY OCCUR THROUGHOUT BUILDING. REFER TO SHEET S8.1 OR S9.1 FOR ATTACHMENTS.
6. REFER TO SCHEDULE 10/P2.0 FOR ACCESSIBLE HEIGHTS AT TOILETS.
7. REFER TO DETAILS 1, 3, 4 & 5, SHEET A7.1 FOR TOILET PARTITION ANCHORAGE BLOCKING.
8. SEWER AND WATER STUB OUTS SHALL BE LOCATED WITHIN THE ALLOWABLE AREA AS SHOWN ON FLOOR PLAN AND CONNECTIONS SHALL BE EASILY ACCESSIBLE FOR FUTURE RELOCATION. STUB OUT HEIGHT SHALL BE COORDINATED BY THE MANUFACTURER.
9. PIPING MATERIAL
   a. WATER: COPPER TYPE "L", 95/5 SOLDER.
   b. WASTE DRAIN AND VENT: ABS.
10. REFER TO SHEET M1.0 FOR TYPICAL BRACING AND ANCHORAGE NOTES.

GENERAL NOTES

IDENTIFICATION STAMP
DIV. OF THE STATE ARCHITECT
APP: 03-124589 INC:
REVIEWED FOR
SS ☑ FLS ☑ ACS ☑
DATE: 04/15/2025

AMS American Modular Systems
787 Spreckels Ave., Manteca, CA 95336
Phone (209) 825-1921 Fax (209) 825-7018
www.americanmodular.com

INTELLECTUAL-PROPERTY & PROPRIETARY RIGHTS STATEMENT
COPYRIGHT © AMERICAN MODULAR SYSTEMS (AMS)
AMS OWNS ALL COPYRIGHT AND OTHER INTELLECTUAL-PROPERTY AND PROPRIETARY RIGHTS IN THESE DRAWINGS, SPECIFICATIONS, AND THE MATERIAL CONTAINED HEREIN. CERTAIN ELEMENTS SHOWN IN THESE DOCUMENTS ARE REGISTERED TRADEMARKS OF AMS. ALL PATENTABLE MATERIALS CONTAINED IN THESE DOCUMENTS AND ORIGINATING WITH AMS WILL REMAIN THE SOLE PROPERTY OF AMS. THESE DRAWING, SPECIFICATIONS, AND THE MATERIAL CONTAINED HEREIN MAY NOT BE REPRODUCED, TRANSMITTED, COPIED, DISTRIBUTED, MODIFIED, OR OTHERWISE DISPOSED OF (DIRECTLY OR INDIRECTLY) AND MAY NOT BE USED (IN WHOLE OR IN PART) TO ASSIST IN THE CONSTRUCTION, DESIGN, OR OTHER MAKING OF, OR FOR THE PURPOSE OF FURNISHING ANY INFORMATION FOR THE CONSTRUCTION, DESIGN, OR OTHER MAKING OF, ANY BUILDINGS (MODULAR OR OTHERWISE), DRAWINGS, SPECIFICATIONS, PRINTS, APPARATUS, OR PARTS THEREOF, EXCEPT AS EXPRESSLY PERMITTED BY WRITTEN CONSENT OF, OR IN A WRITTEN AGREEMENT WITH, AMS. SUBMITTAL OR DISTRIBUTION TO MEET OFFICIAL REGULATORY REQUIREMENTS WILL NOT BE CONSTRUED AS PUBLICATION IN DEROGATION OF AMS'S COPYRIGHT OR OTHER INTELLECTUAL-PROPERTY OR PROPRIETARY RIGHTS.

PRE-CHECKED SET NAME
24' x 40' THRU 120' x 40'
STANDARD MODULAR BUILDING
(HIGH SEISMIC)
FORM

SITE SPECIFIC PROJECT NAME
.
.
.

APPROVED
DIV. OF THE STATE ARCHITECT
APP: 04-122051 PC
REVIEWED FOR
SS ☑ FLS ☑ ACS ☑ CG ☑
DATE: 04/03/2024

☐ 2022 CBC PRE-CHECK (PC) DOCUMENT
A SEPARATE PROJECT APPLICATION FOR CONSTRUCTION IS REQUIRED.

MANUFACTURER PROFESSIONAL OF RECORD ON PC

LICENSED ARCHITECT
RANDAL PATRICK CAVANAGH
No. C12631
Ren. 3-31-25
STATE OF CALIFORNIA

THESE DRAWINGS ARE PRELIMINARY AND NOT FOR CONSTRUCTION UNLESS STAMPED & SIGNED BY THE DESIGN PROFESSIONAL OF RECORD.

REVISIONS
1
2
3
4

DRAWN BY:	AA
SCALE:	AS NOTED
DATE:	MM/DD/YY
PROJECT NO:	XXXX-22

SHEET TITLE:
RESTROOM OPTIONS
PLUMBING PLAN
& FIXTURE SCHEDULE

SHEET NUMBER:
P1.0

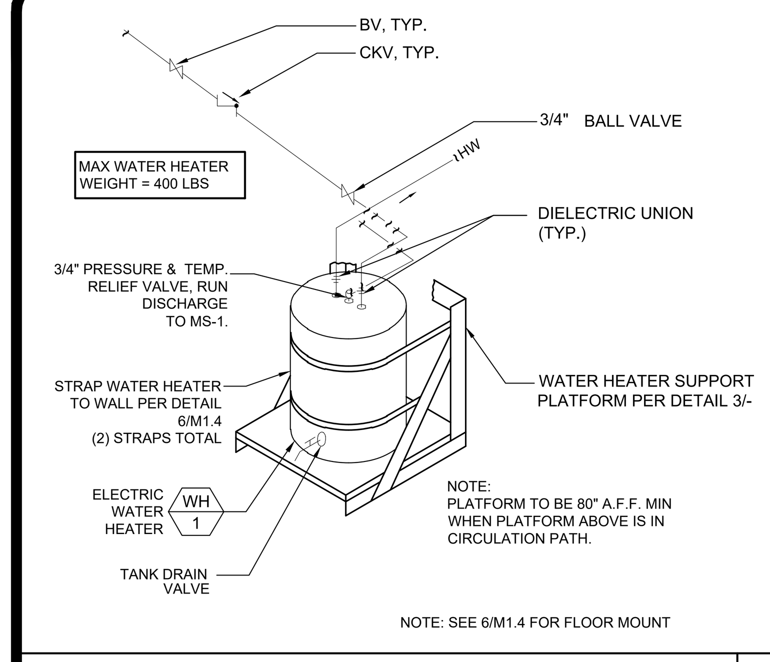

WATER HEATER SUPPORT DETAIL
NOT TO SCALE | 1

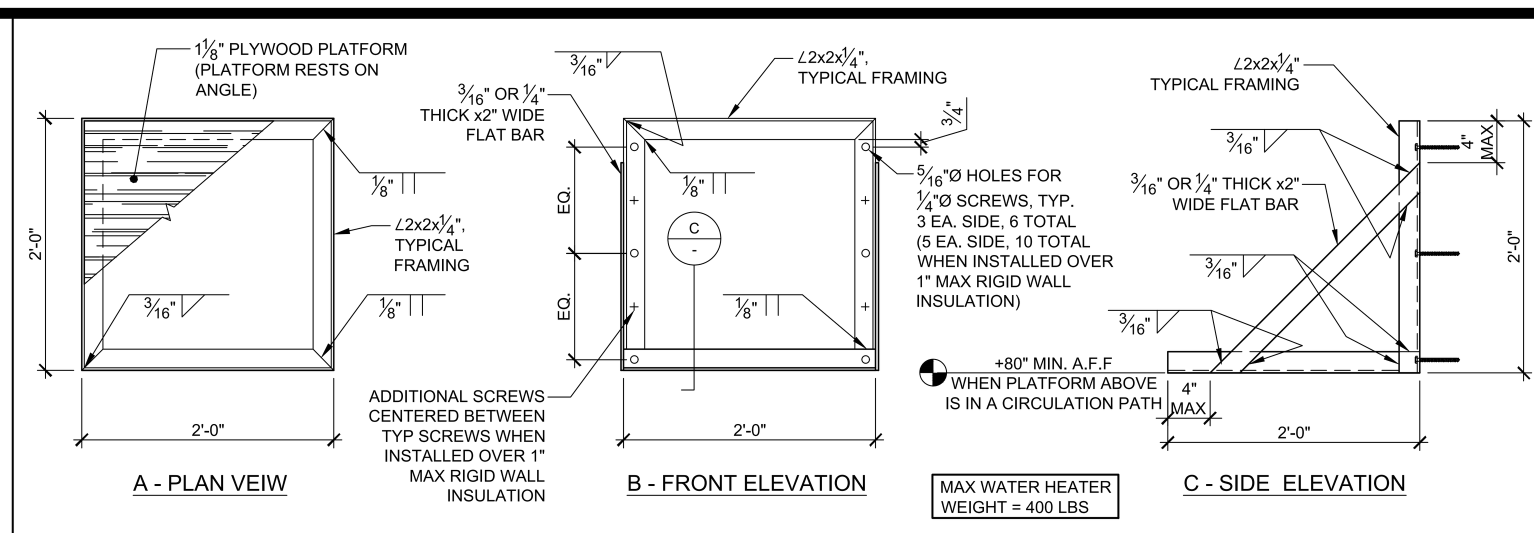

ATTACHMENT TO WOOD STUD WALL
ATTACH TO (2) 2x FLAT PER 3/S8.1 INTERNAILED w/ 0.131"Øx3" NAILS @ 12" O.C. STAGGERED w/ (3) 1/4"Ø MIN. x4" LAG SCREWS EACH SIDE (3" MIN. PENETRATION INTO WOOD FRAMING).
MAY BE ATTACHED TO EXTERIOR WALL OR INTERIOR PARTITION WALL.

ATTACHMENT TO STEEL STUD WALL
ATTACH TO 14GA CHANNEL PER 14C/S9.2 w/ (3) 1/4"Ø SDSTS EACH SIDE TYP, (5) 1/4"Ø SDSTS EACH SIDE WHEN INSTALLED OVER 1" MAX RIGID WALL INSULATION.
MAY BE ATTACHED TO EXTERIOR WALL OR INTERIOR PARTITION WALL.

WATER HEATER PLATFORM DETAIL
NOT TO SCALE | 3

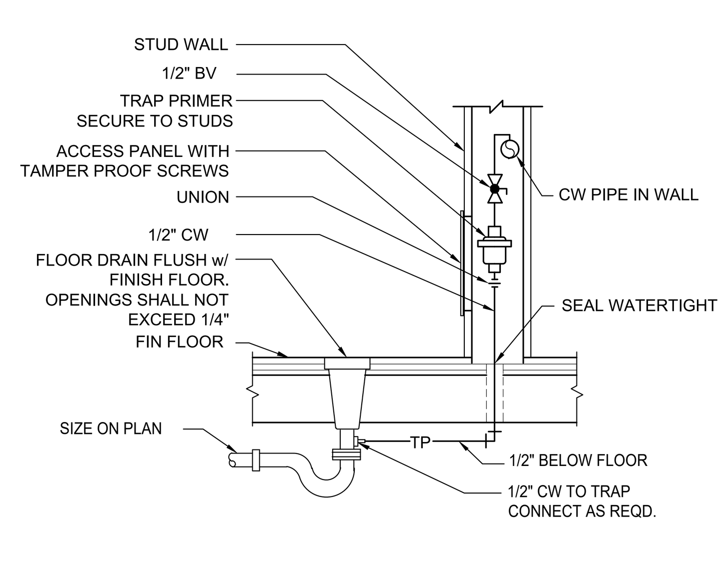

TRAP PRIMER DETAIL
NOT TO SCALE | 6

NOTES:
1. INSULATE WATER SUPPLY AND DRAIN PIPING AT ACCESSIBLE SINKS OR LAVS WITH "TRUEBRO® LAV GUARD 2" OR "TRUEBRO® SOFT GUARD PLUS" SHIELDS IWH SHALL NOT BE LOCATED IN THE REQUIRED TOE CLEARANCE. REFERANCE DETAIL 8 AND/OR 17 (AS APPLIES)
2. THERE SHALL BE NO SHARP OR ABRASIVE EDGES IN PROXIMITY TO REQUIRED CLEARANCES
3. PER CA ENERGY CODE SECTION 609.12, HOT WATER PIPING FROM WATER HEATER TO FIXTURE CONTROL VALVE IS REQUIRED TO BE INSULATED TO A MIN. WALL THICKNESS OF NOT LESS THAN THE DIAMETER OF A PIPE UP TO 2" DIAN. INSULATION WALL THICKNESS SHALL NOT BE LESS THAN 2" FOR A PIPE OF 2" OR MORE IN DIAMETER

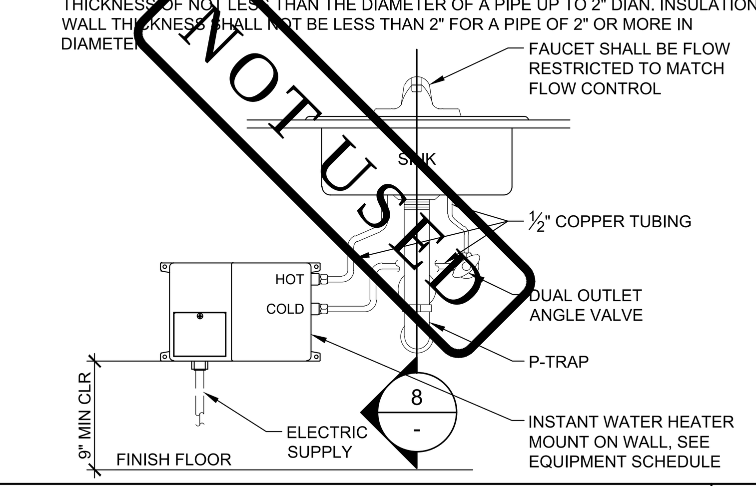

INSTANT WATER HEATER DETAIL
NOT TO SCALE | 7

DIM 'A'	DIM 'B'	DIM 'C'	DIM 'D'
17"	8"	11"	17"
18"	9"	12"	18"
19"	10"	13"	19"
20"	11"	14"	20"
21"	12"	15"	21"
22"	13"	16"	22"
23"	14"	17"	23"
24"	15"	18"	24"
25"	16"	19"	25"

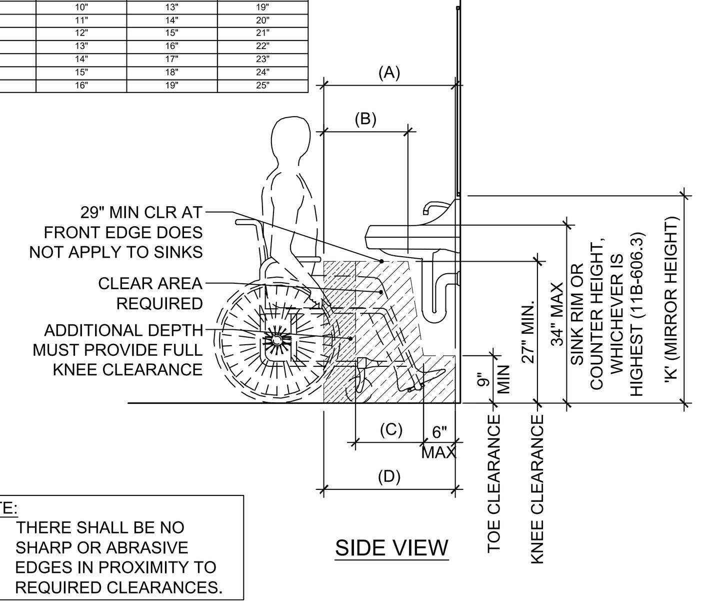

NOTE:
1. THERE SHALL BE NO SHARP OR ABRASIVE EDGES IN PROXIMITY TO REQUIRED CLEARANCES.

ACCESSIBLE SINK CABINET
NOT TO SCALE | 8

HEIGHTS FOR ACCESSIBLE FEATURES IN TOILET FACILITIES

	FIXTURE & MEASUREMENT POINT	PRIMARY USERS				NOTES
		AGES 3-4	AGES 5-8	AGES 9-12	AGES 13 -ADULT	
A	TOILET OFFSET, CENTERLINE FROM FACE OF WALL	12"	12" - 15"	15" - 18"	17" - 18"	
B	TOILET SEAT HEIGHT	11" - 12"	12" - 15"	15" - 17"	17" - 19"	
C	TOILET CONTROLS (TOP OF FLUSH)	36" MAX.	36" MAX.	36" MAX.	44" MAX.	FLUSH CONTROLS SHALL BE LOCATED ON OPEN SIDE OF TOILET.
D	TOP OF GRAB BARS GRIPPING SURFACE	18" - 20"	20" - 25"	25" - 27"	33" - 36"	
E	TOILET PAPER DISPENSER OUTLET (A.F.F., TO CENTERLINE OF OUTLET OR ROLL)	14"	14" - 17"	17" - 19"	19" MIN.	CENTERLINE OF DISPENSER OUTLET SHALL BE BETWEEN 7" TO 9" IN FRONT OF THE TOILET. OUTLET OF DISPENSER MUST BE BELOW GRAB BAR. DISPENSER (INCLUDING FULL TOILET PAPER ROLL) MUST NOT ENCROACH INTO REQ'D GRAB BAR CLEARANCE.
F	TOILET SEAT COVER DISPENSER, HEIGHT TO TOP OF OUTLET	24" - 32"	30" - 32"	32" - 36"	40" MAX.	
G	URINAL HEIGHT (LIP HEIGHT)	12" - 13" SUGGESTED (17" MAX.)	13" - 15" SUGGESTED (17" MAX.)	15" - 17" SUGGESTED (17" MAX.)	17" MAX.	
H	URINAL FLUSH CONTROL HEIGHT	44" MAX.	44" MAX.	44" MAX.	44" MAX.	
I	LAV/SINK RIM HEIGHT OR COUNTER	24" - 28" SUGGESTED (31 MAX.)	31" MAX.	31" MAX.	34" MAX.	
J	LAV/SINK KNEE CLEARANCE	SIDE APPROACH	AGE 6-8, 24" MIN. (AGE 5, SIDE APPROACH)	24" MIN.	27" MIN. (29" MIN. AT APRON FOR LAVATORY)	29" MIN TO BOTTOM FRONT EDGE OF LAV; 27" MIN @ 8" DEEP
K	MIRROR (ABOVE LAVATORY, SINK OR COUNTERTOP), LOWEST POINT OF REFLECTIVE SURFACE	24" - 32" SUGGESTED (40" MAX.)	30" - 32" SUGGESTED (40" MAX.)	32" - 36" SUGGESTED (40" MAX.)	40" MAX.	MIRROR NOT LOCATED ABOVE LAVATORY OR COUNTERTOP SHALL BE MOUNTED SO THAT LOWEST EDGE OF REFLECTING SURFACE IS 35" MAX. ABOVE FINISH FLOOR.
L	DISPENSERS, DRYERS, HEIGHT TO TOP OF OUTLET, HANDLE OR OPERATING MECHANISM (WHICHEVER IS HIGHEST)	24" - 32" SUGGESTED (40" MAX.)	30" - 32" SUGGESTED (40" MAX.)	32" - 36" SUGGESTED (40" MAX.)	40" MAX	ACCESSORIES SHALL COMPLY WITH 11B-307.2
M	LO DRINKING FOUNTAIN, HEIGHT TO BUBBLER	30" MAX *	30" MAX. *	30" MAX. *	36" MAX.	KNEE CLEARANCE 27" H. AT 8" DEEP IS REQ'D IF HIGHER THAN 30" A.F.F.
N	HI DRINKING FOUNTAIN, HEIGHT TO BUBBLER	38" - 43"	38" - 43"	38" - 43"	38" - 43"	

NOTES:
1. THIS TABLE AND RELATED DIAGRAMS ILLUSTRATE THE SPECIFIC REQUIREMENTS OF CALIF. TITLE 24 (2022 C.B.C. SECTION 11B-601) AND IS SHOWN HERE ONLY AS AN AID FOR CONSTRUCTION AND INSTALLATION.
2. ACCESSORIES ARE NOT IN MANUFACTURER'S SCOPE OF WORK.
3. DIMENSIONS GIVEN ARE FROM FACE OF FINISH, UNLESS OTHERWISE NOTED.
4. NOT ALL ITEMS LISTED MAY OCCUR IN THE PROJECT.
5. HEIGHTS CHOSEN FOR CHILDREN'S WATER CLOSETS & ACCESSORIES D & E SHALL BE CONSISTENTLY APPLIED FOR THE AGE GROUP.

M* WHERE A D.F. FOR CHILDREN IS MOUNTED MAXIMUM 30" A.F.F., THE SPOUT SHALL BE MAXIMUM 3-1/2" FROM THE FRONT EDGE OF THE UNIT

ACCESSIBLE HEIGHTS TABLE
10

NOTE:
ALL DRINKING FOUNTAINS SHALL BE LOCATED COMPLETELY WITHIN ALCOVES, BETWEEN WING WALLS, OR OTHERWISE POSITIONED SO AS NOT TO ENCROACH INTO PEDESTRIAN WAYS (PER C.B.C. SECTION 11B-602.9), AND SHALL BE ACCESSIBLE PER 11B-206.5, SHALL BE APPROACHABLE PER SECTION 11B-305.6 AND HAVE MANEUVERING CLEARANCES PER SECTION 11B-305.7.
THE ACCESSIBLE D.F. SHALL HAVE 30"X48" CLEAR FLOOR SPACE, WITH KNEE AND TOE CLEARANCE POSITIONED FOR FORWARD APPROACH MIN. 17" UNDER AND CENTERED ON THE UNIT. (11B-602.2, 11B-306)

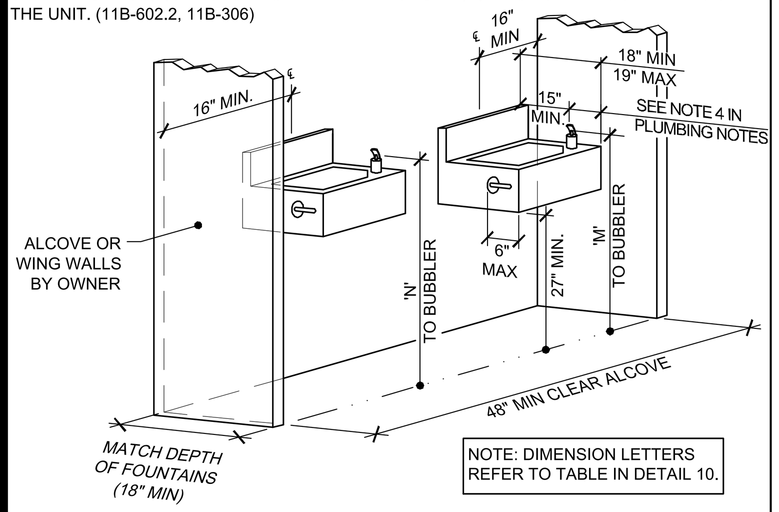

NOTE: DIMENSION LETTERS REFER TO TABLE IN DETAIL 10.

HI-LO DRINKING FOUNTAIN
NOT TO SCALE | 11

NOTES:
1. MODIFY BASE AS SHOWN FOR ADULT WHEELCHAIR ACCESS.
2. CABINET IS FOR ADULT USE ONLY.
3. ALL EXTERIOR SURFACES TO BE PLASTIC LAMINATE.
4. CABINET DOORS ARE NOT ALLOWED @ SINKS.
5. THERE SHALL BE NO SHARP OR ABRASIVE SURFACES BELOW COUNTER
6. IF ALTERNATE DIMENSIONS FOR CHILDREN ARE BEING DESIGNED A SITE SPECIFIC DETAIL MUST BE PROVIDED.

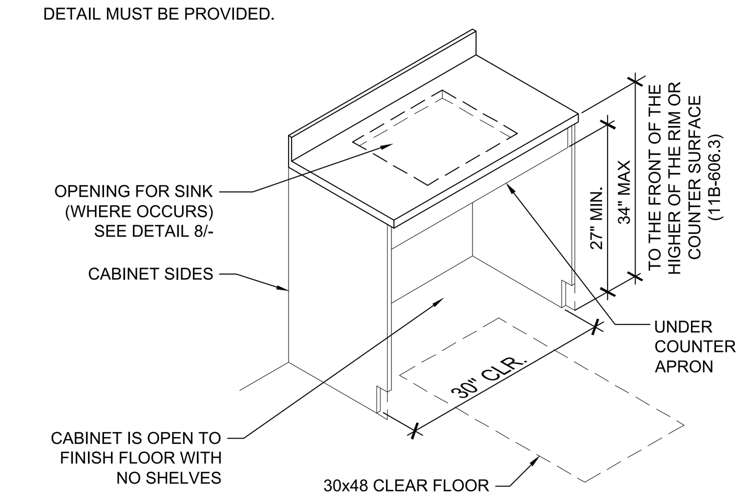

ACCESSIBLE CABINET DETAIL
NOT TO SCALE | 12

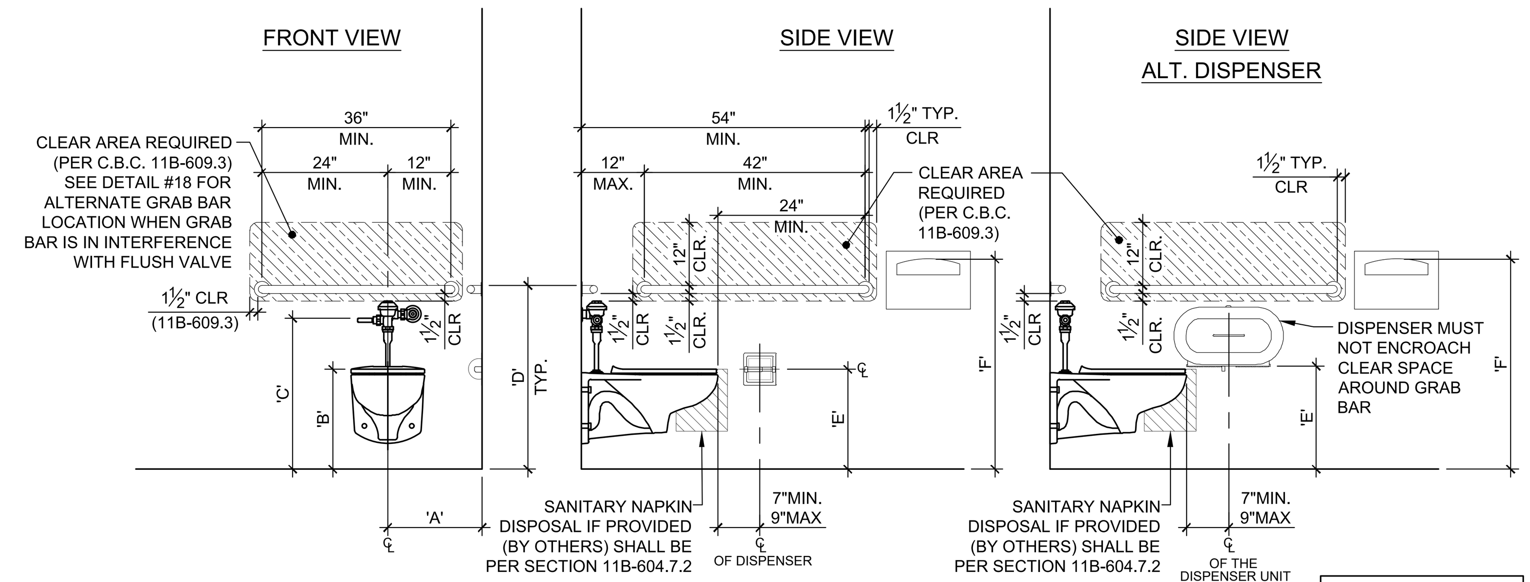

NOTE: DIMENSION LETTERS REFER TO TABLE IN DETAIL 10.

ACCESSIBLE TOILET AND ACCESSORIES (ADULT)
SCALE: 1/2" = 1'-0" | 14

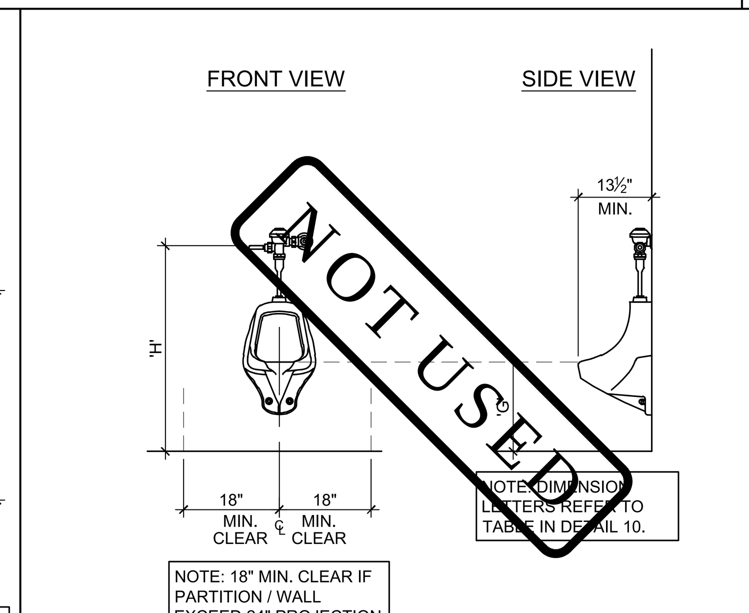

NOTE: 18" MIN. CLEAR IF PARTITION / WALL EXCEED 24" PROJECTION

ACCESSIBLE URINAL
SCALE: 1/2" = 1'-0" | 15

DIM 'A'	DIM 'B'	DIM 'C'	DIM 'D'
17"	8"	11"	17"
18"	9"	12"	18"
19"	10"	13"	19"
20"	11"	14"	20"
21"	12"	15"	21"
22"	13"	16"	22"
23"	14"	17"	23"
24"	15"	18"	24"
25"	16"	19"	25"

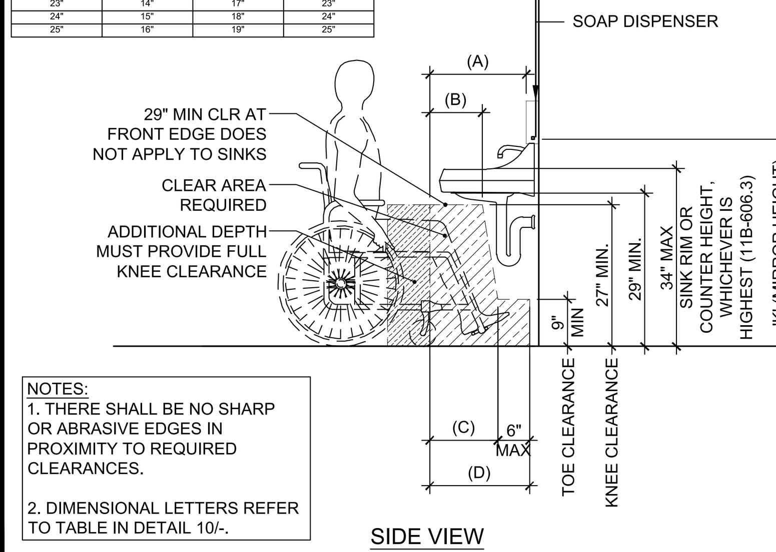

NOTES:
1. THERE SHALL BE NO SHARP OR ABRASIVE EDGES IN PROXIMITY TO REQUIRED CLEARANCES.

2. DIMENSIONAL LETTERS REFER TO TABLE IN DETAIL 10/-.

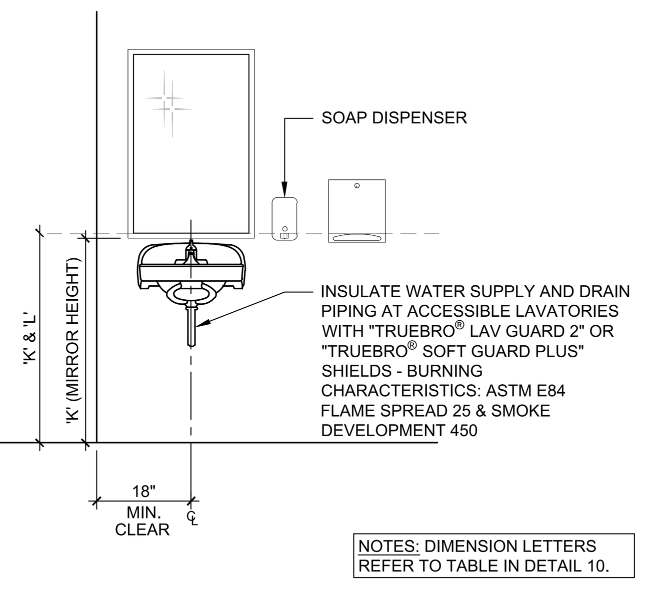

NOTES: DIMENSION LETTERS REFER TO TABLE IN DETAIL 10.

ACCESSIBLE LAV CLEARANCE & ACCESSORIES
SCALE: 1/2" = 1'-0" | 17

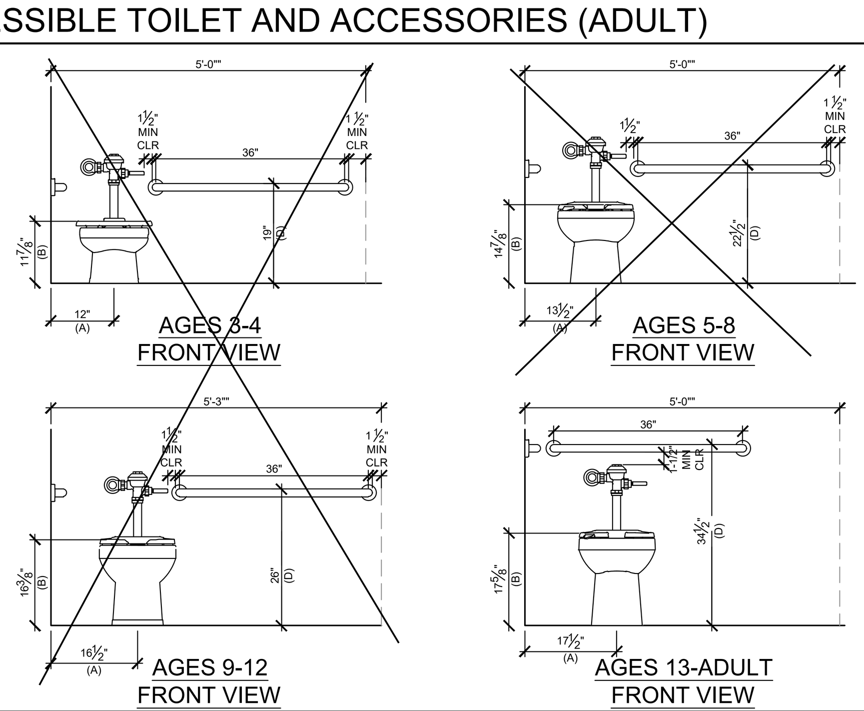

WHERE AN ADMINISTRATIVE AUTHORITY REQUIRES FLUSH CONTROLS FOR FLUSH VALVES TO BE LOCATED IN A POSITION THAT CONFLICTS WITH THE LOCATION OF THE REAR GRAB BAR, THEN THE REAR GRAB BAR SHALL BE PERMITTED TO BE SPLIT OR SHIFTED TO THE OPEN SIDE OF THE TOILET AREA.

(PER CBC 11B-604.5.2 EXCEPTION 2)

NOTES:
1. DIMENSION LETTERS REFER TO TABLE IN DETAIL 10.

2. AT LOCATIONS WHERE GRAB BAR MAY BE LOWER IT MUST CLEAR THE FLUSH VALVE HANDLE AS SHOWN

ALTERNATE GRAB BAR SHIFT DETAILS
SCALE: 1/2" = 1'-0" | 18

1. DWV PIPING SHALL BE ABS PLASTIC
2. COLD WATER SUPPLY SHALL BE TYPE L COPPER
3. MIN SLOPE 1/4" PER FOOT MAY SLOPE 4" CI AT 1/8" PER FOOT VENTS SHALL TERMINATE NOT LESS THAN 10 FEET FROM OR AT LEAST 3 FT. ABOVE ANY WINDOW, DOOR, AIR INTAKE OR VENT SHAFT, NOR LESS THAN 3FT. IN EVERY DIRECTION FROM ANY LOT LINE; ALLEY AND STREET EXCEPTED; EXTEND 6" ABOVE THE ROOF
4. 11B-602.6 WATER FLOW: IF THE SPOUT IS LOCATED LESS THAN 3 INCHES FROM THE FRONT OF THE UNIT, THE ANGLE OF THE STREAM SHALL BE 30 DEGREES MAXIMUM. WHERE LOCATED BETWEEN 3 INCHES AND 5 INCHES FROM THE FRONT OF THE UNIT, THE ANGLE OF THE STREAM SHALL BE 15 DEGREES MAXIMUM RELATIVE TO THE FRONT FACE (ORIENTATION OF WALL SURFACE).

PLUMBING NOTES
19

IDENTIFICATION STAMP
DIV. OF THE STATE ARCHITECT
APP: 03-124589 INC:
REVIEWED FOR
SS ☑ FLS ☑ ACS ☑
DATE: 04/15/2025

AMS®
American Modular Systems
787 Spreckels Ave., Manteca, CA 95336
Phone (209) 825-1921 Fax (209) 825-7018
www.americanmodular.com

INTELLECTUAL-PROPERTY & PROPRIETARY RIGHTS STATEMENT
COPYRIGHT © AMERICAN MODULAR SYSTEMS (AMS)
AMS OWNS ALL COPYRIGHT AND OTHER INTELLECTUAL-PROPERTY AND PROPRIETARY RIGHTS IN THESE DRAWINGS, SPECIFICATIONS, AND THE MATERIAL CONTAINED HEREIN. CERTAIN ELEMENTS SHOWN IN THESE DOCUMENTS ARE REGISTERED TRADEMARKS OF AMS. ALL PATENTABLE MATERIALS CONTAINED IN THESE DOCUMENTS AND ORIGINATING WITH AMS WILL REMAIN THE SOLE PROPERTY OF AMS. THESE DRAWING, SPECIFICATIONS, AND THE MATERIAL CONTAINED HEREIN MAY NOT BE REPRODUCED, TRANSMITTED, COPIED, DISTRIBUTED, MODIFIED, OR OTHERWISE DISPOSED OF (DIRECTLY OR INDIRECTLY) AND MAY NOT BE USED (IN WHOLE OR IN PART) TO ASSIST IN THE CONSTRUCTION, DESIGN, OR OTHER MAKING OF, OR FOR THE PURPOSE OF FURNISHING ANY INFORMATION FOR THE CONSTRUCTION, DESIGN, OR OTHER MAKING OF, ANY BUILDINGS (MODULAR OR OTHERWISE), DRAWINGS, SPECIFICATIONS, PRINTS, APPARATUS, OR PARTS THEREOF, EXCEPT AS EXPRESSLY PERMITTED BY WRITTEN CONSENT OF, OR IN A WRITTEN AGREEMENT WITH, AMS. SUBMITTAL OR DISTRIBUTION TO MEET OFFICIAL REGULATORY REQUIREMENTS WILL NOT BE CONSTRUED AS PUBLICATION IN DEROGATION OF AMS'S COPYRIGHT OR OTHER INTELLECTUAL-PROPERTY OR PROPRIETARY RIGHTS.

PRE-CHECKED SET NAME
24' x 40' THRU 120' x 40'
STANDARD MODULAR BUILDING
(HIGH SEISMIC)
FORM®

SITE SPECIFIC PROJECT NAME
VENTURA COLLEGE
(1) 72'x40' BUILDING

APPROVED
DIV. OF THE STATE ARCHITECT
APP: 04-122051 PC
REVIEWED FOR
SS ☑ FLS ☑ ACS ☑ CG ☑
DATE: 04/03/2024

☒ 2022 CBC PRE-CHECK (PC) DOCUMENT
A SEPARATE PROJECT APPLICATION FOR CONSTRUCTION IS REQUIRED.

MANUFACTURER PROFESSIONAL OF RECORD ON PC

LICENSED ARCHITECT
RANDALL PATRICK CAVANAGH
No. C12631
Ren. 3-31-25
STATE OF CALIFORNIA

THESE DRAWINGS ARE PRELIMINARY AND NOT FOR CONSTRUCTION UNLESS STAMPED & SIGNED BY THE DESIGN PROFESSIONAL OF RECORD.

REVISIONS
1
2
3
4

DRAWN BY:	AA
SCALE:	AS NOTED
DATE:	MM/DD/YY
PROJECT NO:	XXXX-22

SHEET TITLE:
PLUMBING DETAILS
&
ACCESSIBLE DETAILS

SHEET NUMBER:
P2.0

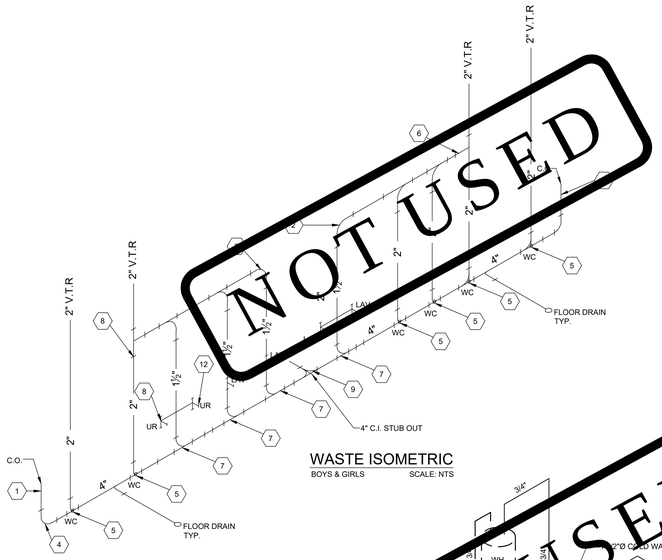

WASTE ISOMETRIC
BOYS & GIRLS SCALE: NTS

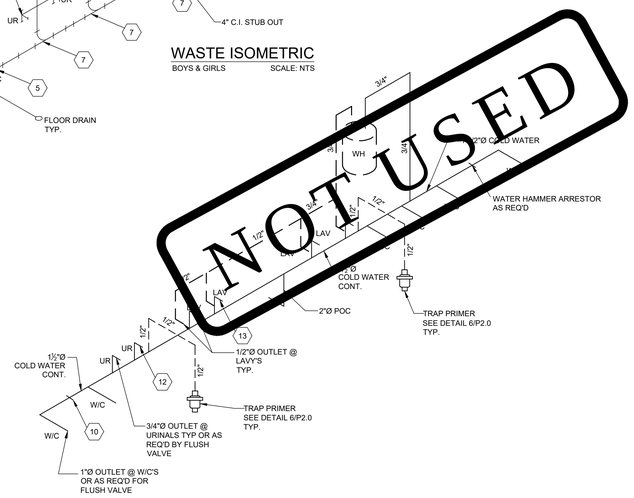

WATER SUPPLY ISOMETRIC
BOYS & GIRLS SCALE: NTS

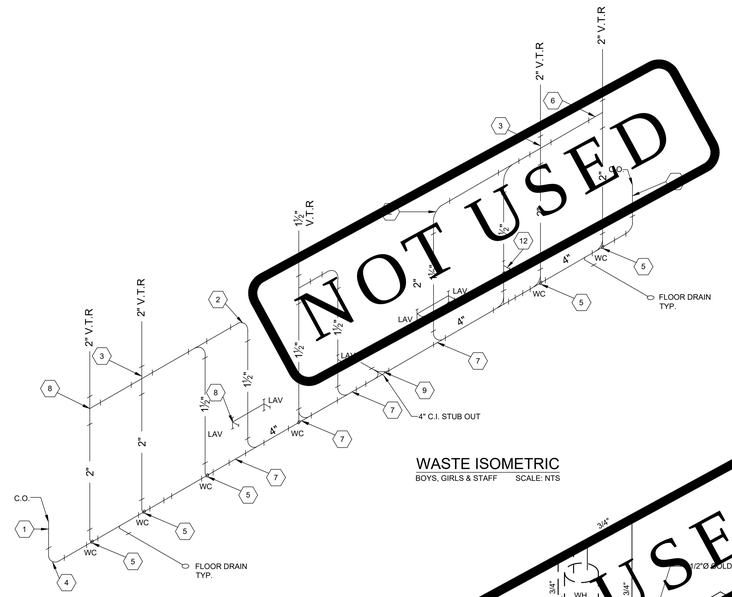

WASTE ISOMETRIC
BOYS, GIRLS & STAFF SCALE: NTS

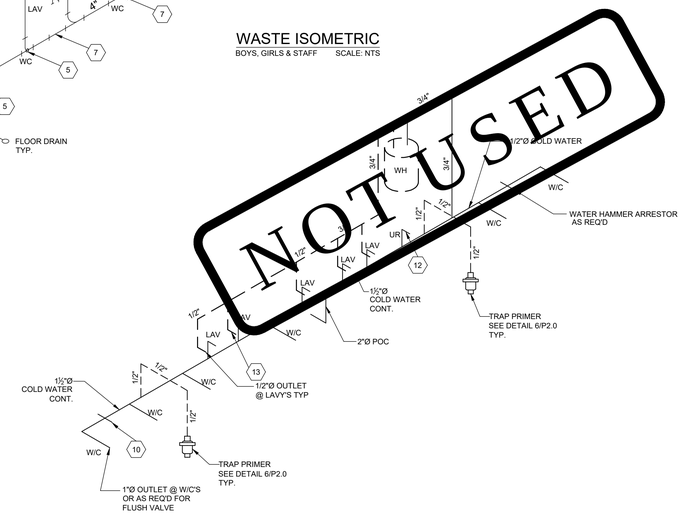

WATER SUPPLY ISOMETRIC
BOYS, GIRLS & STAFF SCALE: NTS

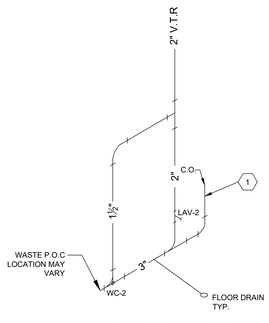

WASTE ISOMETRIC
SINGLE TOILET OPTION SCALE: NTS

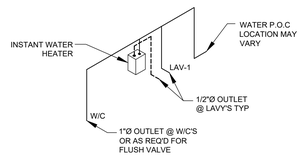

WATER SUPPLY ISOMETRIC
SINGLE TOILET OPTION SCALE: NTS

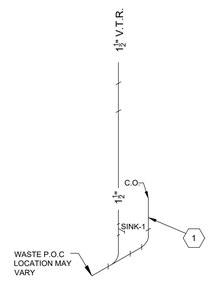

WASTE ISOMETRIC
CLASSROOM SINK OPTION SCALE:NTS

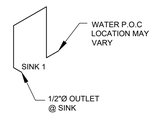

WATER SUPPLY ISOMETRIC
CLASSROOM SINK OPTION SCALE: NTS

KEY NOTES

1. 4" CLEAN OUT
2. VENT 90
3. VENT CROSS
4. 4" QUARTER BEND
5. SMITH#0600 CARRIER
6. 2" SANITARY TAP TEE
7. 4x4x2 COMBINATION WYE 1/8 BEND
8. 2x2x1 1/2 SANITARY TEE
9. 4" DOUBLE COMBINATION
10. 2"x18" LONG CU AIR CHAMBER
11. 1" CW STUB AT WATER CLOSETS
12. 3/4" CW STUB AT URINALS
13. 1/2 CW STUB AT LAVATORIES

IDENTIFICATION STAMP
DIV. OF THE STATE ARCHITECT
APP: 03-124589 INC:
REVIEWED FOR
SS ☑ FLS ☑ ACS ☑
DATE: 04/15/2025

AMS®
American Modular Systems
787 Spreckels Ave., Manteca, CA 95336
Phone (209) 825-1921 Fax (209) 825-7018
www.americanmodular.com

INTELLECTUAL-PROPERTY & PROPRIETARY RIGHTS STATEMENT
COPYRIGHT © AMERICAN MODULAR SYSTEMS (AMS)
AMS OWNS ALL COPYRIGHT AND OTHER INTELLECTUAL-PROPERTY AND PROPRIETARY RIGHTS IN THESE DRAWINGS, SPECIFICATIONS AND THE MATERIAL CONTAINED HEREIN. CERTAIN ELEMENTS SHOWN IN THESE DOCUMENTS ARE REGISTERED TRADEMARKS OF AMS. ALL PATENTABLE MATERIALS CONTAINED IN THESE DOCUMENTS AND ORIGINATING WITH AMS WILL REMAIN THE SOLE PROPERTY OF AMS. THESE DRAWING, SPECIFICATIONS AND THE MATERIAL CONTAINED HEREIN MAY NOT BE REPRODUCED, TRANSMITTED, COPIED, DISTRIBUTED, MODIFIED, OR OTHERWISE DISPOSED OF (DIRECTLY OR INDIRECTLY) AND MAY NOT BE USED (IN WHOLE OR IN PART) TO ASSIST IN THE CONSTRUCTION, DESIGN, OR OTHER MAKING OF, OR FOR THE PURPOSE OF FURNISHING ANY INFORMATION FOR THE CONSTRUCTION, DESIGN, OR OTHER MAKING OF, ANY BUILDINGS (MODULAR OR OTHERWISE), DRAWINGS, SPECIFICATIONS, PRINTS, APPARATUS, OR PARTS THEREOF, EXCEPT AS EXPRESSLY PERMITTED BY WRITTEN CONSENT OF, OR IN A WRITTEN AGREEMENT WITH, AMS. SUBMITTAL OR DISTRIBUTION TO MEET OFFICIAL REGULATORY REQUIREMENTS WILL NOT BE CONSTRUED AS PUBLICATION IN DEROGATION OF AMS'S COPYRIGHT OR OTHER INTELLECTUAL-PROPERTY OR PROPRIETARY RIGHTS.

PRE-CHECKED SET NAME
24' x 40' THRU 120' x 40'
STANDARD MODULAR BUILDING
(HIGH SEISMIC)
FORM®

SITE SPECIFIC PROJECT NAME
VENTURA COLLEGE
(1) 72'x40' BUILDING

APPROVED
DIV. OF THE STATE ARCHITECT
APP: 04-122051 PC
REVIEWED FOR
SS ☑ FLS ☑ ACS ☑ CG ☑
DATE: 04/03/2024

☒ 2022 CBC PRE-CHECK (PC) DOCUMENT
A SEPARATE PERMIT AND CLASSROOM CONSTRUCTION IS REQUIRED.

MANUFACTURER PROFESSIONAL OF RECORD ON PC

LICENSED ARCHITECT
PATRICK CHAVEZ
No. C12631
Ren. 3-31-25
STATE OF CALIFORNIA

THESE DRAWINGS ARE PRELIMINARY AND NOT FOR CONSTRUCTION UNLESS STAMPED & SIGNED BY THE DESIGN PROFESSIONAL OF RECORD

REVISIONS
1
2
3
4

DRAWN BY:	AA
SCALE:	AS NOTED
DATE:	MM/DD/YY
PROJECT NO:	XXXX-22

SHEET TITLE:
PLUMBING
ISOMETRICS DRAWINGS

SHEET NUMBER:
P3.0