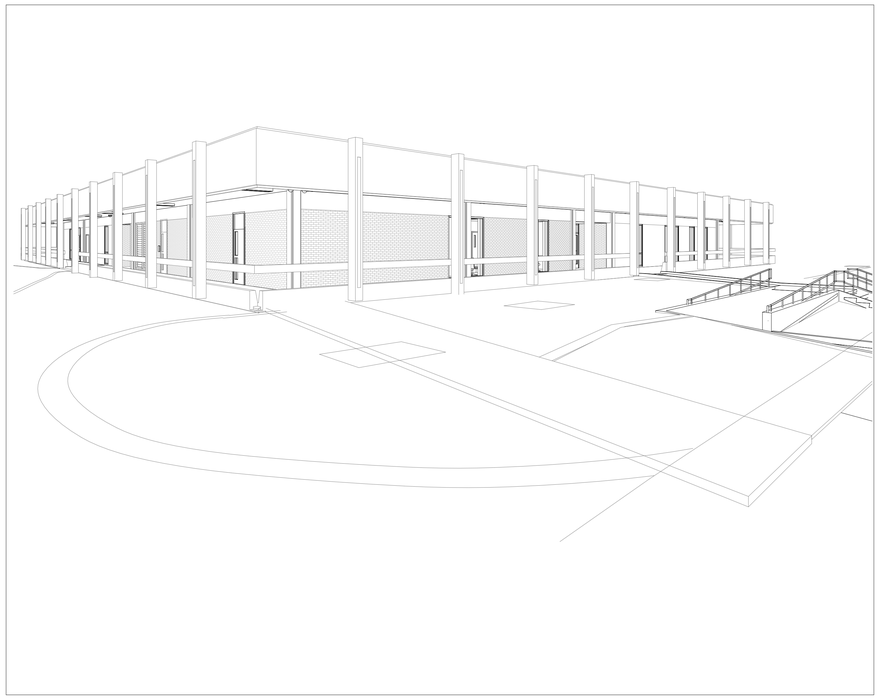

ADMINISTRATION BUILDING SEISMIC REHABILITATION AND RENOVATION

MOORPARK COLLEGE

7075 CAMPUS ROAD
MOORPARK, CA 91320

SUBMITTAL: DSA SUBMITTAL V2

DATE: JUNE 18, 2024

VICINITY MAP

NORTH

SCOPE OF WORK

INTERIOR RENOVATION TO AN EXISTING ONE STORY BUILDING:

1. DEMOLISH EXISTING INTERIOR CONSTRUCTION AND CONSTRUCT NEW WALLS AND OFFICE SPACES
2. PROVIDE A NEW FIRE SPRINKLER SYSTEM
3. CONSTRUCT NEW ADA COMPLIANT RAMPS TO ACCESS THE BUILDING
4. REMOVE (E) SPRAY-APPLIED FIREPROOFING AT ALL BEAMS AND APPLY NEW FIREPROOFING
5. UPGRADE HVAC SYSTEM
6. EXTERIOR SOFFIT ALTERATION
7. RETROFIT OF EXISTING STRUCTURE FOR SEISMIC EVALUATION REH 123082. RETROFIT SCOPE IS DIAPHRAGM STRENGTHENING WITH HORIZONTAL STEEL BRACES WITH IMPACTED CONNECTIONS AND SUPPORTS. THIS INCLUDES STRENGTHENING AT DIAPHRAGM STRUTS AND DIAPHRAGM CONNECTIONS TO MASONRY WALLS. INTERIOR CMU SHEARWALLS ADDED TO REDUCE SEISMIC DEMAND ON EXISTING SECONDARY MASONRY WALLS. NEW AND ENLARGED FOOTINGS ADDED FOR THE SEISMIC LOAD DISTRIBUTION TO THE FOUNDATION. CRACKS AT THE EXISTING PERIMETER CONCRETE FASCIA TO BE REPAIRED.

INSPECTIONS:
CLASS II INSPECTOR REQUIRED

PROJECT TEAM

OWNER
MOORPARK COMMUNITY COLLEGE
7075 CAMPUS RD.
MOORPARK, CA 93021
(805) 378-1400

ARCHITECT
AMADOR ARCHITECTURE
28328 AGOURA RD. #203
AGOURA HILLS, CA 93021
(805) 530 - 3938

CIVIL ENGINEER
ENCOMPASS CONSULTANT GROUP
333 N. LANTANA STREET, SUITE 287
CAMARILLO, CALIFORNIA 93010
(805) 322-4443

STRUCTURAL ENGINEER
ORION STRUCTURAL GROUP, INC.
223 EAST THOUSAND OAKS BLVD. # 304
THOUSAND OAKS, CA 91360
(805) 390-9242

MECHANICAL / PLUMBING ENGINEER
AE GROUP MECHANICAL ENGINEERS, INC.
838 EAST FRONT STREET,
VENTURA, CALIFORNIA 93001
(805) 653-1722

ELECTRICAL ENGINEER
LUCCI & ASSOCIATES, INC.
3251 CORTE MALPASO, SUITE 511
CAMARILLO, CALIFORNIA 93012
(805) 389-6520

FIRE PROTECTION ENGINEEER
SCHRAM FIRE PROTECTION ENGINEERS
6123 INEZ STREET, SUITE 6
VENTURA, CA 93003
(805) 650-2511

DRAWING LIST

SHT NO.	DRAWING TITLE
GENERAL	
G000	TITLE SHEET
G001	GENERAL NOTES, ABBREVIATIONS & SYMBOLS
G002	ACCESSIBILITY DETAILS
G003	EGRESS PLAN
CIVIL	
C100	DEMOLITION PLAN 100% CD
C101	GRADING PLAN 100% CD
C102	SITE SECTIONS 100% CD
C103	DETAILS 100% CD
C104	WATER PLAN 100% CD
C105	WATER DETAILS 100% CD
ARCHITECTURAL	
A101	CAMPUS SITE PLAN
A102	SITE PLAN - LOCAL FIRE AUTHORITY REVIEW
A103	DEMOLITION SITE PLAN
A104	SITE PLAN
A105	ENLARGED SITE PLANS & SECTIONS
A111	DEMOLITION FLOOR PLAN
A112	DEMO. REFLECTED CEILING PLAN
A113	DEMOLITION ROOF PLAN
A114	OVERALL FLOOR PLAN
A115	REFLECTED CEILING PLAN
A116	ROOF PLAN
A201	EXTERIOR ELEVATIONS
A301	BUILDING SECTIONS
A302	WALL SECTIONS
A401	ENLARGED FLOOR PLAN - WEST
A402	ENLARGED FLOOR PLAN - EAST
A403	ENLARGED TOILET ROOMS FLOOR PLAN & ELEVATIONS
A501	SITE DETAILS
A502	PARTITION TYPES & DETAILS
A503	DOOR & WINDOW DETAILS
A504	DETAILS
A505	CASEWORK DETAILS
A506	CEILING NOTES & DETAILS
A507	CEILING DETAILS
A508	ROOF DETAILS
A601	DOOR & WINDOW SCHEDULES
A602	FINISH SCHEDULE & FLOOR FINISH PLAN
A701	INTERIOR ELEVATIONS
A702	INTERIOR ELEVATIONS
A703	INTERIOR ELEVATIONS
A704	INTERIOR ELEVATIONS
A705	INTERIOR ELEVATIONS
A706	INTERIOR ELEVATIONS
A707	INTERIOR ELEVATIONS
A708	INTERIOR ELEVATIONS
A709	INTERIOR ELEVATIONS
A710	INTERIOR ELEVATIONS
A711	INTERIOR ELEVATIONS
A712	INTERIOR ELEVATIONS
A713	INTERIOR ELEVATIONS
A714	INTERIOR ELEVATIONS
A715	INTERIOR ELEVATIONS
A801	SIGNAGE PLAN & SCHEDULE
A802	SIGNAGE DETAILS
STRUCTURAL	
S001	STRUCTURAL GENERAL NOTES
S002	STRUCTURAL GENERAL NOTES
S010	TYPICAL DETAILS
S020	TYPICAL DETAILS
S021	TYPICAL DETAILS
S022	TYPICAL DETAILS
S023	TYPICAL DETAILS
S024	TYPICAL DETAILS
S108	FOUNDATION PLAN
S110	ROOF FRAMING PLAN
S300	TYPICAL DETAILS
S301	STRUCTURAL DETAILS
S310	STRUCTURAL DETAILS
S311	STRUCTURAL DETAILS
S312	STRUCTURAL DETAILS
S320	STRUCTURAL DETAILS

SHT NO.	DRAWING TITLE
MECHANICAL	
M1.0	MECHANICAL NOTES
M1.1	MECHANICAL SCHEDULES
M2.0	MECHANICAL DEMO FLOOR PLAN
M2.1	MECHANICAL ROOF DEMO PLAN
M3.0	MECHANICAL FLOOR PLAN EAST
M3.1	MECHANICAL FLOOR PLAN - WEST
M3.2	HYDRONIC FLOOR PLAN & DETAILS
M3.3	IT/ ELECTRICAL MECHANICAL FLOOR PLAN
M4.0	MECHANICAL ROOF PLAN
M5.0	MECHANICAL DETAILS
M5.1	MECHANICAL DETAILS
M6.0	CONTROL & HYDRONIC DIAGRAM
TITLE 24	
EN1.0	ENERGY NOTES
PLUMBING	
P1.0	PLUMBING NOTES & SCHEDULE
P2.0	DEMOLITION PLUMBING FLOOR PLAN
P2.1	DEMOLITION PLUMBING ROOF PLAN
P3.0	PLUMBING FLOOR PLAN
P3.1	PLUMBING ROOF PLAN
P4.0	PLUMBING DETAILS
P5.0	PLUMBING RISER DIAGRAMS
ELECTRICAL	
E100	GENERAL NOTES, ABBREVIATIONS, SYMBOLS & DRAWING LIST
E101	TITLE 24 PAGE 1 INDOOR
E102	TITLE 24 PAGE 1 OUTDOOR
E130	ADMIN. BUILDING SITE LIGHTING PLAN- EGRESS
E131	ADMIN. BUILDING SITE LIGHTING- EMERGENCY PHOTOMETRIC
E140	EXISTING ELECTRICAL SITE PLAN
E141	ELECTRICAL SITE PLAN- NEW WORK
E145	DEMO ROOF PLAN
E200	EXISTING ELEC. SINGLE LINE DIAGRAM & EXISTING ADMIN. BLDG. ELEC.RM.
E201	ADMIN. BLDG. ELEC. RM. & PARTIAL ELEC. SINGLE LINE DIAGRAM- NEW WORK
E202	ELECTRICAL PANEL SCHEDULES (NEW)
E300A	LIGHTING FIXTURE SCHEDULE
E300B	LIGHTING FIXTURE TYPE 'F1' CUT SHEETS
E300C	LIGHTING FIXTURE TYPE 'F4' CUT SHEETS
E300D	LIGHTING FIXTURE TYPE 'F8' CUT SHEETS
E300E	LIGHTING FIXTURE TYPE 'F9' CUT SHEETS
E300F	LIGHTING FIXTURE TYPE 'F11' & 'F17' CUT SHEETS
E300G	LIGHTING FIXTURE TYPE 'F20', 'OD' & 'OT' CUT SHEETS
E301	ADMINISTRATION BUILDING LIGHTING PLAN- WEST
E302	ADMINISTRATION BUILDING LIGHTING PLAN- EAST
E303	ADMINISTRATION BUILDING EM AND NORMAL PHOTOMETRIC PLAN- WEST
E304	ADMINISTRATION BUILDING EM AND NORMAL PHOTOMETRIC PLAN- EAST
E401	ADMINISTRATION BUILDING POWER PLAN- WEST
E402	ADMINISTRATION BUILDING POWER PLAN- EAST
E410	ENLARGED TEL.IT AND ELECTRICAL ROOMS (154, 162, & 163)
E420	MECHANICAL EQUIPMENT ELECTRICAL SCHEDULE
E421	ADMINISTRATION BUILDING MECHANICAL AND PLUMBING ELECTRICAL PLAN - WEST
E422	ADMINISTRATION BUILDING MECHANICAL AND PLUMBING ELECTRICAL PLAN - EAST
E423	ADMINISTRATION BUILDING MECHANICAL ELECTRICAL PLAN- FOR MECHANICAL SYSTEMS ON ROOF
E500	FIRE ALARM GENERAL NOTES AND DEVICES LEGEND
E501	FIRE ALARM GENERAL NOTES AND DEVICES LEGEND
E502	EST4 EMERGENCY COMMUNICATIONS PLATFORM CUT SHEETS
E503	EST4 REMOTE ENUNCIATOR CUT SHEETS
E504	ADMINISTRATION BUILDING FIRE ALARM PLAN- WEST
E505	ADMINISTRATION BUILDING FIRE ALARM PLAN- EAST
E506	FIRE ALARM PLAN ON ROOF
E507	NEW FIRE ALARM RISER DIAGRAM
E600	ELECTRICAL DETAILS
FIRE PROTECTION	
FP-1	SITE PLAN
FP-2	FIRE SPRINKLER PLAN
FP-3	SECTIONS & DETAILS
TOTAL SHEETS: 131	

DIVISION OF THE STATE ARCHITECT

IDENTIFICATION STAMP
DIV. OF THE STATE ARCHITECT
APP: 03-123218 INC:
REVIEWED FOR
SS ☑ FLS ☑ ACS ☑
DATE: 07/11/2024

MOORPARK COLLEGE

7075 CAMPUS RD
MOORPARK, CA 93021
TEL: (805) 378 - 1400

PROJECT TITLE AND SCHOOL LOCATION

ADMINISTRATION BUILDING SEISMIC REHABILITATION AND RENOVATION
7075 CAMPUS ROAD
MOORPARK, CA 91320

COMMISSIONED ARCHITECT

AMADOR

amador whittle architects, inc.
28328 AGOURA RD, 203 | AGOURA HILLS CA, 91301 | 805-558-4334

CONSULTANT

STAMPS/SEALS

LICENSED ARCHITECT
JEAN ANN AMADOR
C-22205
APRIL 30, 2025
DATE
STATE OF CALIFORNIA

1/9/24	DSA V2
8/23/23	DSA V1

SHEET TITLE:

TITLE SHEET

PROJECT NO: 21-MPC-040
PROJECT ARCH:
DRAWN:
CHECKED:
SHEET NUMBER:

G000

DATE: 1/9/24
SHEET: ___ OF ___

GENERAL NOTES

1. INTERPRETATION OF CONSTRUCTION DOCUMENTS
   - A. ALL INFORMATION DEPICTED IN THESE DRAWINGS AND RELATIVE TO EXISTING CONDITIONS IS BASED ON THE BEST AVAILABLE DATA AT THE TIME THESE CONSTRUCTION DOCUMENTS WERE BEING EXCECUTED, BUT WITHOUT GUARANTEE OF ACCURACY. CONTRACTOR SHALL VERIFY ALL DIMENSIONS AND CONDITIONS AT JOB SITE AND SHALL REPORT ANY DISCREPANICES TO ARCHITECT PRIOR TO COMMENCING ANY WORK.
   - B. THE CONTRACTOR IS RESPONSIBLE FOR ALL COSTS INCURRED RESULTING FROM THE REMOVAL OR REPLACEMENT OF WORK INSTALLED WITHOUT PROPER COORDINATION TO ALL OTHER TRADES, AND/OR PRIOR TO OBTAINING CLARIFICATION FROM THE ARCHITECT WHERE CONFLICTING INFORMATION EXISTS ON THE DRAWINGS.
   - C. THE CONTRACTOR SHALL FURNISH ALL BIDDERS WITH A COMPLETE SET OF CONSTRUCTION DOCUMENTS, INCLUDING BUT NOT LIMITED TO DRAWINGS, SPECIFICATIONS AND ADDENDUMS.
   - D. THE CONTRACTOR IN CONJUNCTION WITH HIS SUBCONTRACTORS SHALL INCLUDE COMPLETE COORDINATION BETWEEN THE VARIOUS DISCIPLINES AS WELL AS ALL OTHER REQUIREMENTS OF THESE CONSTRUCTION DOCUMENTS, INCLUDING BUT NOT LIMITED TO CODE AND PUBLIC UTILITY REQUIREMENTS. FURTHER, WHERE THERE ARE CONFLICTING SOLUTIONS IN THE CONSTRUCTION DOCUMENTS, ALL SUCH ITEMS WILL BE CONSIDERED TO INCLUDE THE MOST STRINGENT OF THE POSSIBLE SOLUTIONS DEPICTED IN THE CONSTRUCTION DOCUMENTS.
   - E. MODIFICATIONS OF DETAILS OF CONSTRUCTION SHALL NOT BE MADE WITHOUT WRITTEN APPROVAL OF THE ARCHITECT AND DSA.
2. CONTRACTOR SHALL VISIT THE SITE TO INVESTIGATE AND VERIFY ALL DIMENSIONS AND EXISTING SITE CONDITIONS AT JOB SITE PRIOR TO START OF WORK.
3. ALL DIMENSIONS INDICATED ARE BELIEVED TO BE ACCURATE, BUT ARE NOT GUARANTEED TO BE SO. CONTRACTOR SHALL FIELD VERIFY ALL DIMENSIONS AND REPORT ANY DISCREPANCIES TO THE ARCHITECT. COORDINATE WITH EXISTING CONDITIONS WHERE INSUFFICIENT DETAIL DIMENSIONS ARE AVAILABLE. ALL DIMENSIONS ARE TO FINISHED FACE OF CONSTRUCTION OR CENTERLINE OF COLUMNS UNLESS NOTED OTHERWISE. DIMENSIONS NOTED AT "CLR" (CLEAR) ARE NOT ADJUSTABLE WITHOUT ARCHITECT'S APPROVAL.
4. DIMENSIONS SHOWN SHALL HAVE PREFERENCE OVER SCALE. DO NOT SCALE DRAWINGS. DIMENSIONS ARE TAKEN FROM FACE OF EXISTING FINISH SURFACE OR FACE OF NEW STUD, UNLESS NOTED OTHERWISE.
5. **ALL ITEMS INCLUDING BUILDINGS SHOWN ARE NEW UNLESS NOTED EXISTING (E).**
6. CONTRACTOR SHALL TAKE ALL PRECAUTIONARY MEASURES TO PROTECT EXISTING PIPELINES AND UTILITIES THAT ARE TO REMAIN IN SERVICE. CONTRACTOR SHALL VERIFY THAT THOSE PIPELINES AND UTILITIES TO BE REMOVED HAVE BEEN DISCONNECTED, SHUT DOWN OR ABANDONED PRIOR TO ATTEMPTING REMOVAL OR DEMOLITION IN A MANNER TO AVOID ANY DISRUPTION OF EXISTING FACILITIES.
7. CONTRACTOR SHALL PROTECT ALL SURFACES & FIXTURES TO REMAIN DURING DEMOLITION AND CONSTRUCTION.
8. ALL DAMAGE DONE TO EXISTING CONSTRUCTION AS A RESULT OF DEMOLITION OR INSTALLATION SHALL BE COMPLETELY REPAIRED BY CONTRACTOR AT OR NO COST TO OWNER. REPAIRED WORK SHALL MATCH EXISTING CONSTRUCTION.
9. CONTRACTOR SHALL REPAIR AND PATCH UP ALL DAMAGES TO EXISTING SURFACES CAUSED BY REMOVAL OF EXISTING EQUIPMENT ATTACHED TO EXISTING SURFACES. (CHALKBOARDS, BOOKSHELVES, TACKBOARDS, WALL HEATERS, PIPING, ETC.).
10. WHERE PATCHES ARE REQUIRED IN EXISTING, SURFACES ADJACENT MATERIAL SHALL BE MATCHED IN TEXTURE AND FINISH.
11. "DEMOLISH" AND "REMOVE" SHALL MEAN TO DEMOLISH, REMOVE FROM THE SITE AND DISPOSE OF IN A LEGAL MANNER UNLESS NOTED OTEHRWISE. TERMINATE PIPING BELOW SUBSTRATE FOR PATCHING. ELECTRICAL WIRE DISCONNECT SHALL BE AT THE SOURCE OF POWER.
12. **CONTRACTOR TO HAVE ALL SALVAGE RIGHTS TO ALL DEMOLISHED COMPONENTS AND EQUIPMENT. SALVAGE RIGHTS TO BE REFLECTED IN THE BID PROPOSAL TO THE DISTRICT BY WAY OF A BID REDUCTION. THE DISTRICT DOES NOT WANT ANY DEMOLISHED COMPONENTS OR EQUIPMENT BACK.**
13. CONTRACTOR SHALL THOROUGHLY CLEAN AND SECURE THE AREA OF CONSTRUCTION AFTER EACH DAY OF WORK. CONTRACTOR SHALL REMOVE AND DISPOSE OF ALL CONSTRUCTION DEBRIS OFF SITE.
14. LOCATIONS OF STRUCTURES, UNDERGROUND PIPELINES AND UTILITIES WERE OBTAINED FROM AVAILABLE RECORDS. THE CONTRACTOR SHALL FIELD VERIFY THE LOCATIONS AND ELEVATIONS OF ALL PIPELINES AND UTILITIES BEFORE COMMENCING DEMOLITON, EARTHWORK OR CONSTRUCTION WORK.
15. GENERAL CONTRACTOR SHALL VERIFY ALL SITE CONDITIONS PRIOR TO START OF CONSTRUCTION. ALL QUESTIONS SHALL BE SENT TO ARCHITECT.
16. ALL SALVAGEABLE MATERIALS AND EQUIPMENT TO BE REMOVED SHALL REMAIN THE SOLE PROPERTY OF THE OWNER. THE CONTRACTOR SHALL CONSULT WITH THE OWNER CONCERNING STORAGE AND/OR DISPOSAL OF SUCH EQUIPMENT. OWNER HAS FULL SALVAGE RIGHTS. ALL REMOVED MATERIALS OTHER THAN ITEMS TO BE SALVAGED, OR REUSED SHALL BECOME CONTRACTOR'S PROPERTY AND SHALL BE REMOVED FROM THE PROJECT SITE.
17. ALL WORK, INCLUDING REMOVAL OF EXISTING WORK, SHALL BE PERFORMED IN A MANNER THAT MINIMIZES THE AMOUNT OF NOISE, DUST, TRAFFIC AND/OR OTHER FORMS OF DISTURBANCES IN COMPLIANCE WITH ALL APPLICABLE CODES AND ORDINANCES SO THAT THE PUBLIC, STUDENTS AND STAFF, AS WELL AS OTHER OCCUPIED AREAS OF THE SCHOOL ARE SUBJECTED TO AS LITTLE DISRUPTION AS REASONABLY POSSIBLE.
18. ROUTES OF INGRESS AND EGRESS FOR MATERIALS AND WORKMEN, AND LIMITS OF THE PROJECT AREA MAY BE DESIGNATED BY THE OWNER. THE CONTRACTOR SHALL CONFINE HIS ACTIVITES WITHIN SUCH LIMITS. THE CONTRACTOR SHALL INSTALL AND MAINTAIN ADEQUATE SAFETY AND DUST BARRIERS IN THE SITE, ACROSS CORRIDORS AND ELSEWHERE AS REQUIRED.
19. SHUT DOWN OF EXISTING AND OPERATING PLUMBING, MECHANICAL AND ELECTRICAL SYSTEMS OR PORTIONS THEREOF SHALL BE COORDINATED IN ADVANCE WITH THE OWNER.
20. CONTRACTOR SHALL COORDINATE ALL WORK SHOWN ON THE ARCHITECTURAL DRAWINGS WITH THE SPECIFICATIONS AND THE WORK SHOWN ON THE MECHANICAL, PLUMBING, AND ELECTRICAL DRAWINGS. ANY DISCREPANCIES FOUND SHALL BE BROUGHT TO THE ATTENTION OF THE ARCHITECT IN WRITIING BEFORE PROCEEDING WITH ANY RELATED WORK.
21. CONTRACTOR SHALL BE RESPONSIBLE FOR THE FIRE RATING CONTINUITY OF STRUCTURE, WALLS, FLOOR AND CEILINGS INTERRUPTED BY THE WORK OF ALL TRADES. THIS INCLUDES, BUT IS NOT LIMITED TO, FIRE RATED ENCLOSURES AT THE CEILING AND WALLS OF CORRIDORS AND STORAGE ROOMS, AND DUCT SHAFTS.
22. PROVIDE ALL NECESSARY BLOCKING, BACKING AND FRAMING FOR LIGHT FIXTURES, ELECTRICAL UNITS, A/C EQUIPMENT, TOILET FIXTURES & ACCESSORIES, RAILINGS, GRAB BARS, AND ALL OTHERS REQUIRING SAME.
23. CEILING HEIGHT DIMENSIONS ARE FROM FINISH FLOOR TO FINISH FACE OF CEILING.
24. WHERE NEW WALLS ALIGNS WITH EXISTING WALL, PROVIDE SMOOTH INVISIBLE TRANSITION BETWEEN NEW AND EXISTING.
25. NEW GYPSUM BOARD FINISH SHALL BE 5/8" TYPE 'X' OR AS REQUIRED FOR UL FIRE-RATING AS INDICATED ON DRAWINGS.
26. GENERAL CONTRACTOR SHALL PROVIDE TEMPORARY EIGHT (8) FEET HIGH CHAIN LINK FENCE BARRICADES AT WORK AREAS, DISTRICT APPROVED STORAGE AREAS AND WHEREVER NECESSARY TO MAINTAIN A SAFE PASSAGE AND SAFE ENVIRONMENT.
27. BEFORE PROCEEDING WITH THE CORING OR CUTTING OF WALLS AND FLOORS, ETC., THE CONTRACTOR SHALL PREPARE LAYOUT OF CUTTING OR CORING AND SHALL HAVE THE APPROVAL BY THE STRUCTURAL ENGINEER AND THE D.S.A. FIELD DISTRICT ENGINEER IN ORDER TO PROCEED WITH THE CUTTING OR CORING.
28. SAW-CUT EXISTING A.C. PAVING AND/OR CONCRETE FLOOR SLAB AS REQUIRED FOR NEW PIPE INSTALLATION AND NEW DEPRESSED CONCRETE SLAB, AND REPAIR TO MATCH EXISTING.
29. STRENGTH OF CONCRETE:
   - A. SLABS ON EARTH, SIDEWALKS AND CURBS: 3,000 PSI AT 28 DAYS
   - B. FOUNTATIONS: 3,000 PSI AT 28 DAYS
   - C. FILL ON METAL DECK (LIGHTWEIGHT): 3,000 PSI AT 28 DAYS
30. THE CONTRACTOR SHALL NOT COMMENCE THE WORK, IN PART OR IN FULL, PRIOR TO OBTAINING THE NOTICE-TO-PROCEED (NTP) FROM VCCD.
31. IN CASE OF CONFLICT, THE MORE EXPENSIVE CONSTRUCTION MEANS AND METHOD SHALL BE USED.
32. THE PROVISIONS OF CFC AND CBC CHAPTERS 7,11 & 33 SHALL BE ENFORCED ON THIS PROJECT.
33. NO DEFERRED SUBMITTAL ITEMS.

HAZARDOUS MATERIALS NOTES

1. THIS PROJECT INCLUDES THE REMOVAL AND DISPOSAL OF HAZARDOUS MATERIALS INCLUDING, BUT NOT LIMITED TO, ASBESTOS AND LEAD BASED PAINT. THE CONTRACTOR SHALL REMOVE AND DISPOSE OF HAZARDOUS MATERIALS IN ACCORDANCE WITH ALL APPLICABLE LAWS AND REGULATIONS. A LISTING OF KNOWN HAZARDOUS MATERIALS AS WELL AS A WORK PLAN FOR ITS REMOVAL, PREPARED BY THE OWNER'S SEPARATE CONSULTANT, IS INCLUDED IN THE PROJECT MANUAL.
2. FIREPROOFING: CONTRACTOR IS RESPONSIBLE FOR REPLACING ALL FIREPROOFING REMOVED FROM THE PROJECT AS A HAZARDOUS MATERIAL WITH NEW FIREPROOFING TO ACHIEVE THE REQUIRED HOURLY RATINGS INDICATED IN REMODELED BUILDING CODE ANALYSIS ON SHEET G002.

DSA NOTES

1. ALL WORK SHALL COMPLY WITH THE 2022 EDITION, TITLE 24 CALIFORNIA CODE OF REGULATIONS.
2. A 'DSA CERTIFIED' PROJECT INSPECTOR WITH CLASS 2 CERTIFICATION EMPLOYED BY THE DISTRICT (OWNER) AND APPROVED BY DSA SHALL PROVIDE CONTINUOUS INSPECTION OF THE WORK. THE DUTIES OF THE INSPECTOR ARE DEFINED IN SECTION 4-342, PART 1, TITLE 24, CCR.
3. A DSA ACCEPTED TESTING LABORATORY DIRECTLY EMPLOYED BY THE SCHOOL BOARD SHALL CONDUCT ALL THE REQUIRED TESTS AND INSPECTIONS FOR THE PROJECT.
4. GRADING PLANS, DRAINAGE IMPROVEMENTS, ROAD AND ACCESS REQUIREMENTS AND ENVIRONMENTAL HEALTH CONSIDERATIONS SHALL COMPLY WITH ALL LOCAL ORDINANCES.
5. CHANGE TO THE APPROVED DRAWINGS AND SPECIFICATIONS SHALL BE MADE BY ADDENDA OR CONSTRUCTION CHANGE DOCUMENT (CCD) APPROVED BY DSA, AS REQUIRED BY SECTION 4-388, PART 1, TITLE 24.
6. THE INTENT OF THESE DRAWINGS AND SPECIFICATIONS IS THAT THE WORK OF THE ALTERATION, REHABILITATION OR RECONSTRUCTION IS TO BE IN ACCORDANCE WITH TITLE 24, CCR. SHOULD ANY EXISTING CONDITIONS SUCH AS DETERIORATION OR NON-COMPLYING CONSTRUCTION BE DISCOVERED WHICH IS NOT COVERED BY THE CONTRACT DOCUMENTS WHERIN THE FNISHED WORK WILL NOT COMPLY WITH TITLE 24, CCR, A CONSTRUCTION CHANGE DOCUMENT (CCD), OR A SEPARATE SET OF PLANS AND SPECIFICATIONS, DETAILING AND SPECIFYING THE REQUIRED WORK SHALL BE SUBMITTED TO AND APPROVED BY DSA BEFORE PROCEEDING WITH THE WORK. (SECTION 4-317(C), PART 1, TITLE 24 , CCR).
7. TESTING:
   - A. THE CALIFORNIA ENERGY CODE SECTION 10-103 REQUIRES ACCEPTANCE TESTING ON ALL NEWLY INSTALLED LIGHTING CONTROLS, MECHANICAL SYSTEMS, ENVELOPES AND PROCESS EQUIPMENT AFTER INSTALLATION AND BEFORE PROJECT COMPLETION. AN ACCEPTANCE TEST IS A FUNCTIONAL PERFORMANCE TEST TO HELP ENSURE THAT THE NEWLY INSTALLED EQUIPMENT IS OPERATING AND IN COMPLIANCE WITH THE ENERGY CODE.
   - B. LIGHTING CONTROLS ACCEPTANCE TESTS MUST BE PERFORMED BY A CERTIFIED LIGHTING CONTROLS ACCEPTANCE TEST TECHNICIAN (ATT).
   - C. MECHANICAL SYSTEM ACCEPTANCE TESTS MUST BE PERFORMED BY A CERTIFIED MECHANICAL ATT FOR PROJECTS SUBMITTED ON OR AFTER OCTOBER 1, 2021.
   - D. A LISTING OF CERTIFIED ATT'S CAN BE FOUND AT HTTPS://WWW.ENERGY.CA.GOV/PROGRAMS-AND-TOPICS/PROGRAMS/ACCEPTANCE-TEST-TECHNICIAN-CERTIFICATION-PROVIDER-PROGRAM/ACCEPTANCE
   - E. THE ACCEPTANCE TESTING PROCEDURES MUST BE REPEATED, AND DEFICIENCIES MUST BE CORRECTED BY THE BUILDER OR INSTALLING CONTRACTOR UNTIL THE CONSTRUCTION/ INSTALLATION OF THE SPECIFIED SYSTEM CONFORM AND PASS THE REQUIRED ACCEPTANCE CRITERIA.
   - F. PROJECT INSPECTORS WILL BE COLLECTING THE FORMS TO CONFIRM THAT THE REQUIRED ACCEPTANCE TESTS HAVE BEEN COMPLETED.
   - G. ENVELOPE AND PROCESS EQUIPMENT ACCEPTANCE TESTS SHALL BE PERFORMED BY THE INSTALLING CONTRACTOR, ENGINEER/ARCHITECT OF RECORD OR THE OWNER 'S AGENT.
8. WORK SHALL COMPLY WITH THE PROVISIONS OF CHAPTER 33 OF CBC AND CFC, "FIRE SAFETY DURING CONSTRUCTION AND DEMOLITION."

GENERAL REQUIREMENTS

1. THIS PROJECT SHALL COMPLY WITH THE 2019 EDITION OF THE CALIFORNIA CODE OF REGULATIONS TITLE 24 WHICH INCLUDES THE 2022 CALIFORNIA BUILDING CODE, THE CALIFORNIA GREEN BUILDING STANDARDS CODE AND THE 2022 CALIFORNIA FIRE CODE BASED ON THE 2018 INTERNATIONAL FIRE CODE, AND ADOPTS THE 2018 IBC, 2019 UMC, 2019 UPC, AND THE 2017 NEC.
2. WORK PERFORMED SHALL COMPLY WITH THE FOLLOWING:
   - A. THESE GENERAL NOTES UNLESS OTHERWISE NOTED ON PLANS OR SPECIFICATIONS, INTERNATIONAL BUILDING CODE, APPLICABLE EDITION.
   - B. ALL APPLICABLE LOCAL, STATE AND FEDERAL CODES, ORDINANCES, LAWS, REGULATIONS AND PROTECTIVE COVENANTS GOVERNING THE SITE OF WORK.
   - C. STANDARD SPECIFICATIONS OF ASTM.
   - D. IN CASE OF CONFLICT, THE MORE STRINGENT REQUIREMENTS SHALL GOVERN.
   - E. "OR EQUAL": THE CONTRACTOR SHALL SUBMIT FOR THE ARCHITECT'S APPROVAL ALL MATERIALS OR EQUIPMENT WHICH IS CONSIDERED "OR EQUAL" TO THAT SPECIFIED.
3. ON SITE VERIFICATION:

   OF ALL DIMENSIONS AND CONDITIONS SHALL BE THE RESPONSIBILITY OF THE CONTRACTOR AND SUB-CONTRACTORS. NOTED DIMENSIONS TAKE PRECEDENT OVER SCALE. EACH CONTRACTOR OR SUB-CONTRACTOR SHALL REPORT TO PROJECT SUPERINTENDENT ALL CONDITIONS WHICH PREVENT THE PROPER EXECUTION OF THEIR WORK.
4. CLIENT'S ARCHITECT AND PROJECT SUPERINTENDENT:

   TO BE NOTIFIED IMMEDIATELY BY CONTRACTOR OR SUB-CONTRACTOR SHOULD ANY DISCREPANCY OR OTHER QUESTION ARISE PERTAINING TO THE WORKING DRAWINGS AND/OR SPECIFICATIONS. THE CONTRACTOR SHALL BE HELD RESPONSIBLE FOR THE RESULTS OF ANY ERRORS, DISCREPANCIES, OR OMISSIONS WHICH THE CONTRACTOR FAILED TO NOTIFY THE ARCHITECT OF BEFORE CONSTRUCTION AND/OR FABRICATION OF THE WORK.
5. SUB-CONTRACTOR:

   SHALL INSURE THAT ALL WORK IS DONE IN A PROFESSIONAL WORKMANLIKE MANNER BY SKILLED MECHANICS AND SHALL REPLACE ANY MATERIALS OR ITEMS DAMAGED BY SUB-CONTRACTORS' PERFORMANCE. SUB-CONTRACTORS AND SUPPLIERS ARE HEREBY NOTIFIED THAT THEY ARE TO CONFER AND COOPERATE FULLY WITH EACH OTHER DURING THE COURSE OF CONSTRUCTION TO DETERMINE THE EXACT EXTENT AND OVERLAP OF EACH OTHER 'S WORK AND TO SUCCESSFULLY COMPLETE THE EXECUTION OF THE WORK. ALL SUB-CONTRACTOR WORKMANSHIP WILL BE OF QUALITY TO PASS INSPECTIONS BY LOCAL AUTHORITIES, LENDING INSTITUTIONS OR ARCHITECT. ANY ONE OR ALL OF THE ABOVE MENTIONED INSPECTORS MAY INSPECT WORKMANSHIP AT ANY TIME, AND ANY CORRECTIONS NEEDED TO ENHANCE THE QUALITY OF BUILDNG WILL BE DONE IMMEDIATELY. EACH SUB-CONTRACTOR, UNLESS SPECIFICALLY EXEMPTED BY THE TERMS OF HIS SUB-CONTRACT AGREEMENT, SHALL BE RESPONSIBLE FOR CLEANING UP AND REMOVING FROM THE JOB SITE ALL TRASH AND DEBRIS NOT LEFT BY OTHER SUB-CONTRACTORS. CONTRACTOR WILL DETERMINE HOW SOON AFTER SUB-CONTRACTOR COMPLETED EACH PHASE OF HIS WORK THAT TRASH AND DEBRIS WILL BE REMOVED FROM THE SITE.

GREEN BUILDING NOTES

1. ESTABLISH A CONSTRUCTION WASTE MANAGEMENT PLAN FOR THE DIVERTED MATERIALS, OR MEET LOCAL CONSTRUCTION AND DEMOLITION WASTE MANAGEMENT ORDINANCE, WHICHEVER IS MORE STRINGENT. CGBSC 5.408.1
2. WHERE A LOCAL JURISDICTION DOES NOT HAVE A CONSTRUCTION AND DEMOLITION WASTE MANAGEMENT ORDINANCE, SUBMIT A CONSTRUCTION WASTE MANAGEMENT PLAN FOR APPROVAL BY THE ENFORCEMENT AGENCY THAT: 1. IDENTIFIES THE MATERIALS TO BE DIVERTED FORM DISPOSAL BY EFFICIENT USAGE, RECYCLING, REUSE ON THE PROJECT OR SALVAGE FOR FUTURE USE OR SALE. 2. DETERMINES IF MATERIALS WILL BE SORTED ON-SITE OR MIXED. 3. IDENTIFIES DIVERSION FACILITIES WHERE MATERIAL COLLECTED WILL BE TAKEN. 4. SPECIFIES THAT THE AMOUNT OF MATERIALS DIVERTED SHALL BE CALCULATED BY WEIGHT OR VOLUME, BUT NOT BY BOTH. CGBSC 5.408.2
3. DOCUMENTATION SHALL BE PROVIDED TO THE ENFORCING AGENCY WHICH DEMONSTRATES COMPLIANCE WITH SECTION 5.408.2, ITEMS 1 THRU 4. THE WASTE MANAGEMENT PLAN SHALL BE UPDATED AS NECESSARY AND SHALL BE ACCESSIBLE DURING CONSTRUCTION FOR EXAMINATION BY THE ENFORCING AGENCY. CGBSC 5.408.2.1
4. RECYCLE AND OR SALVAGE FOR REUSE A MINIMUM OF 50 PERCENT OF THE NON-HAZARDOUS CONSTRUCTION AND DEMOLITION DEBRIS, OR MEET LOCAL CONSTRUCTION AND DEMOLITION WASTE MANAGEMENT ORDINANCE, WHICHEVER IS MORE STRINGENT. CALCULATE THE AMOUNT OF MATERIALS DIVERTED BY WEIGHT OR VOLUME,BUT NOT BY BOTH. EXCEPTIONS: 1. EXCAVATED SOIL AND LAND-CLEARING DEBRIS 2. ALTERNATE WASTE REDUCTION METHODS DEVELOPED BY WORKING WITH LOCAL AGENCIES IF DIVERSION OR RECYCLE FACILITIES CAPABLE OF COMPLIANCE WITH THIS ITEM DO NOT EXIST. CGBSC 5.408.4
5. THE CALIFORNIA ENERGY CODE SECTION 10-103 REQUIRES ACCEPTANCE TESTING ON ALL NEWLY INSTALLED LIGHTING CONTROLS, MECHANICAL SYSTEMS, ENVELOPES, AND PROCESS EQUIPMENT AFTER INSTALLATION AND BEFORE PROJECT COMPLETION. AN ACCEPTANCE TEST IS A FUNCTIONAL PERFORMANCE TEST TO HELP ENSURE THAT NEWLY INSTALLED EQUIPMENT IS OPERATING AND IN COMPLIANCE WITH THE ENERGY CODE.
6. LIGHTING CONTROLS ACCEPTANCE TESTS MUST BE PERFORMED BY A CERTIFIED LIGHTING CONTROLS ACCEPTANCE TEST TECHNICIAN (ATT).
7. MECHANICAL SYSTEM ACCEPTANCE TESTS MUST BE PERFORMED BY A CERTIFIED MECHANICAL ATT FOR PROJECTS SUBMITTED ON OR AFTER OCTOBER 1, 2021.
8. ENVELOPE AND PROCESS EQUIPMENT ACCEPTANCE TESTS SHALL BE PERFORMED BY THE INSTALLING CONTRACTOR, ENGINEER/ARCHITECT OF RECORD OR THE OWNER 'S AGENT.
9. A LISTING OF CERTIFIED ATT CAN BE FOUND AT: HTTPS://WWW.ENERGY.CA.GOV/PROGRAMS-AND-TOPICS/PROGRAMS/ACCEPTANCE-TEST-TECHNICIAN-CERTIFICATION-PROVIDER-PROGRAM/ACCEPTANCE.
10. THE ACCEPTANCE TESTING PROCEDURES MUST BE REPEATED, AND DEFICIENCIES MUST BE CORRECTED BY THE BUILDER OR INSTALLING CONTRACTOR UNTIL THE CONSTRUCTION/INSTALLATION OF THE SPECIFIED SYSTEMS CONFORM AND PASS THE REQUIRED ACCEPTANCE CRITERIA.
11. PROJECT INSPECTORS WILL COLLECT THE FORMS TO CONFIRM THAT THE REQUIRED ACCEPTANCE TESTS HAVE BEEN COMPLETED.

ABBREVIATIONS

&	AND
(E)	EXISTING
@	AT
A.B.	ANCHOR BOLT
A.C.	ASPHALTIC CONCRETE
A.F.F.	ABOVE FINISH FLOOR
A/C	AIR CONDITIONER
ACOUST	ACOUSTICAL
AL.	ALUMINUM
ALUM	ALUMINUM
ANOD	ANODIZED
ARCH	ARCHITECTURAL
BLDG	BUILDING
BLK	BLOCK OR BLOCKING
BOT	BOTTOM
C.I.	CAST IRON
C.J.	CEILING JOIST
C.L.	CHAIN LINK
C.L.F.	CHAIN LINK FENCE
C.M.U.	CONCRETE MASONRY UNIT
CAB	CABINET
CLG	CEILING
CLR	CLEAR
COL	COLUMN
CONC	CONCRETE
CONST	CONSTRUCTION
CONT	CONTINUOUS
d	PENNY
D.F	DOUGLAS FIR
DBL	DOUBLE
DEMO	DEMOLITION
DET	DETAIL
DIA.	DIAMETER
DIM	DIMENSION
DIV	DIVISION
DR	DOOR
DS	DOWNSPOUT
DWG	DRAWING
E.J.	EXPANSION JOINT
EA	EACH
ELEC	ELECTRICAL
EQ	EQUAL
EQUIP	EQUIPMENT
EXIST	EXISTING
EXP	EXPANSION
EXT	EXTERIOR
F.D.	FLOOR DRAIN
F.E.	FIRE EXTINGUISHER
F.E.C.	FIRE EXTINGUISHER CABINET
F.F.	FINISH FLOOR
F.G	FINISH GRADE
F.R.	FIRE RATED, FIRE RESISTANT
FIN	FINISH
FLHT	FULL HEIGHT
FLR	FLOOR
FR.	FRAME
FT	FOOT OR FEET
FTG	FOOTING
G.F.F.	GLASS FIBER FACED
G.I.	GALVANIZED IRON
G.W.B.	GYPSUM WALLBOARD
GA	GAUGE
GALV	GALVANIZED
GEN	GENERAL
GYP	GYPSUM
H.M.	HOLLOW METAL
HDR	HEADER
HI	HIGH

ABBREVIATIONS

HT	HEIGHT
IN	INCHES
INFO	INFORMATION
INSUL	INSULATION
INT	INTERIOR
KD	KNOCK DOWN
LBS	POUNDS
M.O.	MASONRY OPENING
M.R.	MOISTURE RESISTANT
MATL	MATERIAL
MAX	MAXIMUM
MECH	MECHANICAL
MFR	MANUFACTURER
MIN	MINIMUM
MISC	MISCELLANEOUS
MTL	METAL
N.I.C.	NOT IN CONTRACT AND NOT PART OF THIS APPLICATION
N.T.S.	NOT TO SCALE
N/A	NOT AVAILABLE
NO., #	NUMBER
O.C.	ON CENTER
OPNG	OPENING
OPP	OPPOSITE
PT	POINT
PWD	PLYWOOD
R	RISER
R.C.P.	REFLECTED CEILING PLAN
R.D.	ROOF DRAIN
R.O.	ROUGH OPENING
REF	REFERENCE
REFL	REFLECTED
REINF	REINFORCING
REQ'D	REQUIRED
REV	REVISION
RM	ROOM
S.C.	SOLID CORE
S.F.	SQUARE FEET
S.S.	STAINLESS STEEL
SCHED	SCHEDULE
SECT	SECTION
SHT	SHEET
SIM	SIMILAR
SQ	SQUARE
STD	STANDARD
STL	STEEL
STOR	STORAGE
STRUCT	STRUCTURAL
SUSP	SUSPEND, SUSPENDED
T & G	TONGUE AND GROOVE
T.	TEMPERED
T.O.C.	TOP OF CURB
T.O.P.	TOP OF PLATE
T.O.P.	TOP OF PARAPET
T.O.W.	TOP OF WALL
TEL	TELEPHONE
THK	THICK
TYP	TYPICAL
U.L.	UNDERWRITERS LABORATORIES
U.N.O.	UNLESS NOTED OTHERWISE
V.I.F.	VERIFY IN FIELD
VERT	VERTICAL
W.H.	WATER HEATER
W.R.	WATER RESISTANCE
W.W.M.	WELDED WIRE MESH
W/	WITH
WD	WOOD
WDW	WINDOW

LEGEND

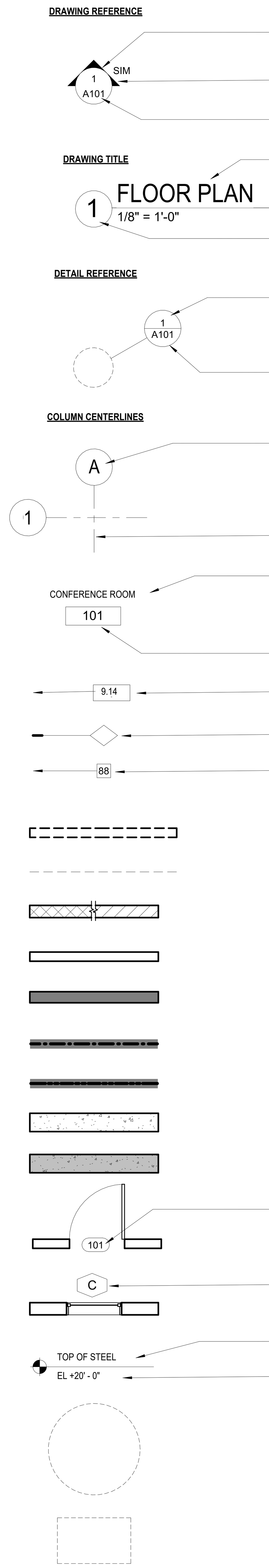

- DRAWING IDENTIFICATION
- DIRECTION INDICATOR (WHERE APPLIES)
- SHEET NUMBER WHERE DRAWN
- DRAWING NAME
- DRAWING IDENTIFICATION
- DETAIL NUMBER
- SHEET NUMBER WHERE DRAWN
- GRID LINE NUMBER
- GRID LINE
- ROOM IDENTIFICATION
- ROOM NUMBER
- KEY NOTES
- WALL TYPE, SEE 1/A5000
- SIGN NUMBER, SEE SIGNAGE SCHEDULES
- EXISTING WALL TO BE REMOVED
- EXISTING ITEM TO BE REMOVED
- MASONRY WALL
- EXISTING STUD WALL TO REMAIN
- NEW STUD WALL
- 1-HR RATED STUD WALL
- 2-HR RATED STUD WALL
- EXISTING CONCRETE WALL/COLUMN TO REMAIN
- NEW CONCRETE WALL
- DOOR REFERENCE, SEE SHEET A601
- WINDOW REFERENCE, SEE SHEET A601
- ITEM BEING REFERENCED
- DATUM ELEVATION
- 5'-0" DIAMETER CLEAR SPACE
- 30" X 48" CLEAR SPACE

APPLICABLE CODES

LIST OF 2022 CALIFORNIA CODE OF REGULATIONS (C.C.R.): APPLICABLE CODES AS OF JANUARY 1, 2023

PART 1 -	2022 CALIFORNIA BUILDING STANDARDS ADMINISTRATIVE CODE, TITLE 24 C.C.R.
PART 2 -	2022 CALIFORNIA BUILDING CODE, TITLE 24 C.C.R. (2018 INTERNATIONAL BUILDING CODE OF THE INTERNATIONAL CODE COUNCIL, WITH CALIFORNIA AMENDMENTS)
PART 3 -	2022 CALIFORNIA ELECTRICAL CODE, TITLE 24 C.C.R. (2017 NATIONAL ELECTRICAL CODE OF THE NATIONAL FIRE PROTECTION ASSOCIATION, NFPA)
PART 4 -	2022 CALIFORNIA MECHANICAL CODE, TITLE 24 C.C.R. (2018 UNIFORM MECHANICAL CODE OF THE INTERNATIONAL ASSOCIATION OF PLUMBING AND MECHANICAL OFFICIALS, IAPMO)
PART 5 -	2022 CALIFORNIA PLUMBING CODE, TITLE 24 C.C.R. (2018 UNIFORM PLUMBING CODE OF THE INTERNATIONAL ASSOCIATION OF PLUMBING AND MECHANICAL OFFICIALS, IAPMO)
PART 6 -	2022 CALIFORNIA ENERGY CODE, TITLE 24 C.C.R.
PART 7 -	CURRENTLY VACANT
PART 8 -	2022 CALIFORNIA HISTORICAL BUILDING CODE, TITLE 24 C.C.R.
PART 9 -	2022 CALIFORNIA FIRE CODE, TITLE 24 C.C.R. (2018 INTERNATIONAL FIRE CODE OF THE INTERNATIONAL CODE COUNCIL)
PART 10 -	2022 CALIFORNIA EXISTING BUILDING CODE (2018 INTERNATIONAL EXISTING BUILDING CODE OF THE INTERNATIONAL CODE COUNCIL, WITH AMENDMENTS)
PART 11 -	2022 CALIFORNIA GREEN BUILDING STANDARDS CODE (CALGREEN CODE), TITLE 24 C.C.R.
PART 12 -	2022 CALIFORNIA REFERENCE STANDARDS CODE, TITLE 24 C.C.R.

PARTIAL LIST OF APPLICABLE STANDARDS

2022 CALIFORNIA BUILDING CODE (FOR SFM) REFERENCED STANDARDS CHAP. 35

NFPA 13	AUTOMATIC SPRINKLER SYSTEMS (CALIFORNIA AMENDED)	2022 EDITION
NFPA 72	NATIONAL FIRE ALARM CODE (CALIFORNIA AMENDED) (NOTE: SEE UL STANDARD 1971 FOR "VISUAL DEVICES")	2022 EDITION
UL 464	AUDIBLE SIGNALING DEVICES FOR F.A. & SIGNAL SYSTEMS	2017 EDITION
UL 1971	SIGNALING DEVICES FOR THE HEARING IMPARED	2010 EDITION (R2010)

DEPARTMENT OF JUSTICE REGULATIONS FOR TITLE II OF THE AMERICANS WITH DISABILITIES ACT OF 1990 WITH REVISED REGULATIONS AS PUBLISHED IN THE FEDERAL REGISTER ON SEPTEMBER 15, 2010, EFFECTIVE MARCH 15, 2012. TITLED ADA STANDARDS FOR ACCESSIBLE DESIGN.

CODE ANALYSIS

EXISTING ADMINISTRATION BUILDING

ALTERATIONS SHALL COMPLY WITH SFM ADOPTED SECTIONS OF CBC 2022, CHAPTER 35, AND CBC CHAPTER 7A

- A. OCCUPANCY TYPE : B (OFFICES AND HEALTH CLINIC)
- B. CONSTRUCTION TYPE: V - B, FULLY SPRINKLERED (S1)
- C. NUMBER OF STORIES: ONE
- D. ALLOWABLE BUILDING HEIGHT : 60'-0" (TABLE 504.3)
  ACTUAL HEIGHT: 15'-0"
- E. AREA ANALYSIS:

1.	BASIC ALLOWABLE AREA:	36,000 S.F.	(TABLE 506.2) B-S1-TYPE V-B
2.	ACTUAL FLOOR AREA:	16,943 G.S.F.	EXCLUDING ROOF OVERHANG
		5,258 G.S.F.	ROOF OVERHANG
		22,201 G.S.F	TOTAL AREA

- F. FIRE SPRINKLERS: FULLY SPRINKLERED
- G. WILDLAND- URBAN INTERFACE (WUI) FIRE AREA AND APPLICABLE PROVISIONS OF CBC CHAPTER 7A

- SECTION 705A: CLASS 'A' ROOFING
- SECTION 706A: VENTILATION OPENINGS SHALL BE WUI VENTS TESTED TO ASTM E2886 AND LISTED
- SECTION 707A.3: EXTERIOR WALL COVERINGS ARE NON-COMBUSTIBLE (EXTERIOR PLASTER & CONCRETE MASONRY UNITS)
- SECTION 707A.6: ENCLOSED ROOF EAVES AND ROOF EAVE SOFFITS: NON-COMBUSTIBLE MATERIALS (EXTERIOR PLASTER)
- SECTION 708A.2 EXTERIOR GLAZING SHALL BE DUAL PANED WITH A MINIMUM OF ONE TEMPERED PANE MEETING REQUIREMENTS OF SECTION 2406 SAFETY GLAZING
- 708A.3 EXTERIOR DOORS SHALL COMPLY WITH THE PROVISIONS OF 708A.3.

DIVISION OF THE STATE ARCHITECT

IDENTIFICATION STAMP
DIV. OF THE STATE ARCHITECT
APP: 03-123218 INC:
REVIEWED FOR
SS ☑ FLS ☑ ACS ☑
DATE: 07/11/2024

MOORPARK COLLEGE

7075 CAMPUS RD
MOORPARK, CA 93021
TEL: (805) 378 - 1400

PROJECT TITLE AND SCHOOL LOCATION

ADMINISTRATION BUILDING SEISMIC REHABILITATION AND RENOVATION

7075 CAMPUS ROAD
MOORPARK, CA 91320

COMMISSIONED ARCHITECT

AMADOR

amador whittle architects, inc.
28328 AGOURA RD, 203 | AGOURA HILLS CA, 91301 | 805-558-4334

CONSULTANT

STAMPS/SEALS

LICENSED ARCHITECT
JEAN ANN AMADOR
C-22205
APRIL 30, 2025
DATE
STATE OF CALIFORNIA

1/9/24	DSA V2
8/23/23	DSA V1

SHEET TITLE:

GENERAL NOTES, ABBREVIATIONS & SYMBOLS

PROJECT NO: 21-MPC-040	PROJECT ARCH:
DRAWN: GW	CHECKED:

SHEET NUMBER:

G001

DATE: 1/9/24	SHEET: ____ OF ____

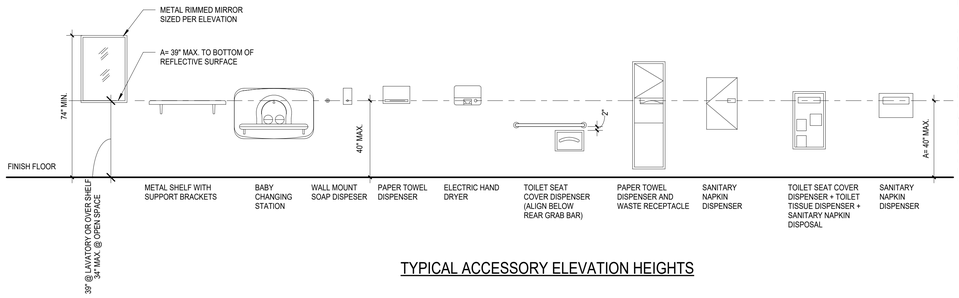

DIMENSIONS IN INCHES

a) TOILET CENTERLINE FROM WALL	17 1/2"
b) TOILET SEAT HEIGHT TO TOP OF SEAT	18"
c) GRAB BAR HEIGHT (TO TOP SURFACE)	34 1/2"
d) TOILET PAPER DISPENSER HEIGHT TO OPNG	19" MIN.
e) TOILET PAPER IN FRONT OF TOILET	8" TO CENTER LINE OF UNIT
f) NAPKIN DISPOSAL HEIGHT TO OPNG	19" MIN. SEE NOTE #1 BELOW
g) DISPENSER HEIGHT	40" MAX.
h) MIRROR HEIGHT (OVER A LAVATORY)	39"
i) MIRROR HEIGHT (ISOLATED MIRROR)	34"
j) LAVATORY/SINK TOP HEIGHT	34" MAX.
k) LAVATORY APRON CLEARANCE	29" MIN.
l) LAVATORY/SINK KNEE CLEARANCE	27" MIN.
m) URINAL LIP HEIGHT	16"
n) URINAL, TOILET FLUSH HANDLE HEIGHT	43"
o) DRINKING FOUNTAIN BUBBLER HEIGHT	36" MAX.
p) DRINKING FOUNTAIN KNEE CLEARANCE	27" MIN.
q) RAMP/STAIR HANDRAIL HEIGHT	32"

NOTES:
1. Y LOCATION SHALL COMPLY WITH CBC 11B-604.7.2
2. FOR BACKING, SEE 8/S020

TYPICAL ACCESSORY ELEVATION HEIGHTS

RESTROOM ACCESSORY MOUNTING HEIGHTS | 3/8" = 1'-0" | 1

DIMENSION LEGEND
A = ADULT DIMENSIONS (AGE 12 AND OVER)

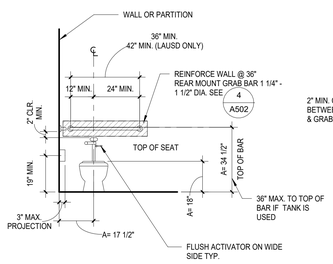

FRONT ELEVATION

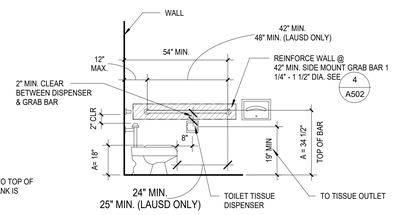

SIDE ELEVATION

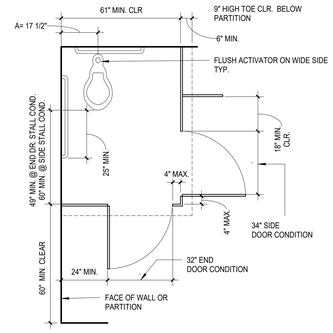

TOILET STALL PLAN

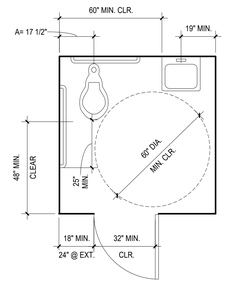

SINGLE ACCOMODATION TOILET PLAN

TOILET DIMENSIONS | 3/8" = 1'-0" | 2

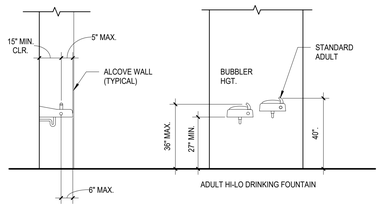

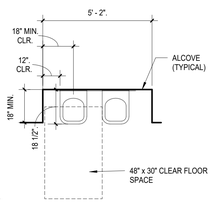

DRINKING FOUNTAIN SECTION | DRINKING FOUNTAIN ELEVATION | DRINKING FOUNTAIN PLAN

DRINKING FOUNTAIN DIMENSIONS | 3/8" = 1'-0" | 5

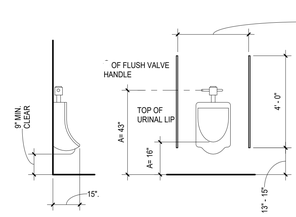

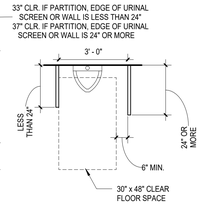

SIDE ELEVATION | FRONT ELEVATION | PLAN

URINAL DIMENSIONS | 3/8" = 1'-0" | 3

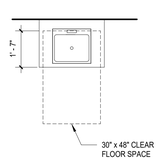

ACCESSIBLE SINK CABINET PLAN

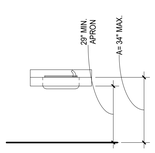

ACCESSIBLE SINK CABINET ELEV.

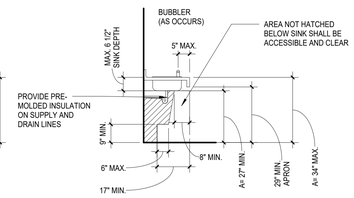

ACCESSIBLE SINK CABINET SECTION

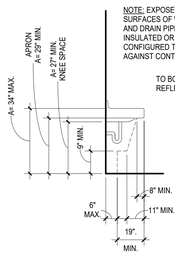

LAVATORY SIDE ELEVATION

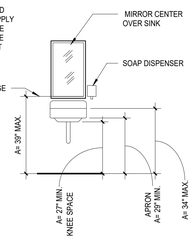

LAVATORY FRONT ELEVATION

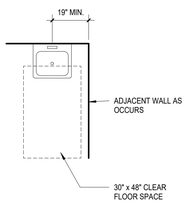

LAVATORY PLAN VIEW

LAVATORY DIMENSIONS | 3/8" = 1'-0" | 4

ACCESSIBILITY NOTES

1. SYMBOL OF ACCESSIBILITY
   A. THE INTERNATIONAL SYMBOL OF ACCESSIBILITY SHALL BE THE STANDARD USED TO IDENTIFY FACILITIES THAT ARE ACCESSIBLE TO AND USEABLE BY PHYSICALLY DISABLED PERSON AS SET FORTH IN THESE BUILDING STANDARDS AND AS SPECIFICALLY REQUIRED IN THIS SECTION. NOTE: SEE FIGURE 17-6 BELOW.
   B. COLOR OF SYMBOL: THE SYMBOL SPECIFIED ABOVE SHALL CONSIST OF A WHITE FIGURE ON A BLUE BACKGROUND. THE BLUE SHALL BE EQUAL TO COLOR NO. 15090 IN FEDERAL STANDARD 595B. EXCEPTION: THE APPROPRIATE ENFORCEMENT AGENCY MAY APPROVE SPECIAL SIGNS AND IDENTIFICATION NECESSARY TO COMPLEMENT DECOR OR UNIQUE DESIGN WHEN IT IS DETERMINED THAT SUCH SIGNS AND IDENTIFICATION PROVIDES ADEQUATE DIRECTION TO HANDICAPPED PERSONS.
   C. CONTRAST OF SYMBOL: CHARACTERS AND SYMBOLS SHALL CONTRAST WITH THEIR BACKGROUND. EITHER LIGHT CHARACTERS ON A DARK BACKGROUND OR DARK CHARACTERS ON A LIGHT BACKGROUND.

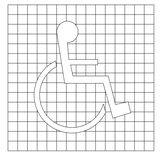

PROPORTIONS

NOTE:
POST SIGNAGE AT SIDELIGHT WINDOW TO ALL ENTRANCES RFHSSD 5 x 5 DECAL - POSTED

INTERNATIONAL SYMBOL OF ACCESSIBILITY

FIGURE 17-6

2. ENTRANCES
   A. LATCHING AND LOCKING DOORS THAT ARE HAND ACTIVATED AND WHICH ARE IN A PATH OF TRAVEL, SHALL BE OPERABLE WITH A SINGLE EFFORT BY LEVER TYPE HARDWARE, PANIC BARS, PUSH-PULL ACTIVATING BARS, OR OTHER HARDWARE DESIGNED TO PROVIDE PASSAGE WITHOUT REQUIRING THE ABILITY TO GRASP THE OPENING HARDWARE.
   B. HAND ACTIVATED DOOR OPENING HARDWARE SHALL BE CENTERED BETWEEN 34 INCHES AND 44-INCHES ABOVE THE FLOOR. PANIC HDWR TO BE MOUNTED ABOVE 36" TO 44".
   C. THE FLOOR LANDING ON EACH SIDE OF AND ENTRANCE OR PASSAGE DOOR SHALL BE LEVEL AND CLEAR. THE LEVEL AND CLEAR AREA SHALL HAVE A LENGTH IN THE DIRECTION OF DOOR SWING OF AT LEAST 60-INCHES AND THE LENGTH OPPOSITE THE SWING OF 48-INCHES AS MEASURE AT RIGHT ANGLES TO THE PLANE OF THE DOOR IN ITS CLOSED POSITION.
   D. THE FLOOR OR LANDING SHALL BE NO MORE THAN 1/2" LOWER THAN THE THRESHOLD OR THE DOORWAY. CHANGE IN LEVEL BETWEEN 1/4" AND 1/2" SHALL BE BEVELED WITH A SLOPE NO GREATER THAN 1:2.
   E. MAXIMUM EFFORT TO OPERATE DOORS SHALL NOT EXCEED 5 LBS FOR EXTERIOR DOOR AND 5 LBS. FOR INTERIOR DOORS. SUCH PULL OR PUSH EFFORT BEING APPLIED AT RIGHT ANGLES TO HINGED DOORS AND AT THE CENTER PLANE OF SLIDING OF FOLDING DOORS. COMPENSATING DEVICES OR AUTOMATIC DOOR OPERATORS MAY BE UTILIZED TO MEET THE ABOVE STANDARDS. WHEN FIRE DOORS ARE REQUIRED, THE MINIMUM OPENING FORCE ALLOWABLE BY THE APPROPRIATE ADMINISTRATIVE AUTHORITY, NOT TO EXCEED 15 POUNDS (66.7N).
3. ACCESSIBLE ENTRANCES
   A. ACCESSIBLE ENTRANCES TO THE BUILDING SHALL BE IDENTIFIED BY THE INTERNATIONAL SYMBOL OF ACCESSIBILITY AS REFERENCED HEREIN. SIGNS AT ENTRIES SHALL BE LOCATED SUCH THAT THEY ARE VISIBLE FROM THE MAIN APPROACH TO THE ENTRY.
4. SIGNS
   A. ALL SIGNS (AT MAIN ENTRANCES, TOILETS, PERMANENT ROOMS, ASSISTIVE LISTENING SYSTEMS(S) ETC. SHALL COMPLY WITH TITLE 24 AND SECTION 11B-216 AND 11B-703.
5. PATH OF TRAVEL
   A. GATES IN PATH OF TRAVEL MUST COMPLY WITH EXIT DOOR REQUIREMENTS. (CBC 11B-206.5, 11B-404 AND ADA STANDARDS FOR ACCESSIBLE DESIGN, DEPARTMENT OF JUSTICE, SECTION 404). GATE HARDWARE SHALL NOT REQUIRE PINCHING, GRASPING, OR TWISTING MOTION TO OPERATE. PROVIDE SOLID KICK PLATES 10" MINIMUM HIGH. CLEAR SPACE BELOW GATE SHALL BE 3" MAXIMUM ABOVE PAVING ON BOTH SIDES OF THE GATE. THE MAXIMUM EFFORT TO OPERATE THE GATES SHALL NOT EXCEED 5 LBS.
   B. HANDRAILS FOR STAIRS AND RAMPS SHALL BE PER APPROVED PLANS AND MOUNTED 1 1/2" MINIMUM FROM SIDE WALLS. CBC 11B-505. ALL WELDED JOINTS AND SURFACES SHALL BE GROUND SMOOTH, NO SHARP OR ABRASIVE CORNERS, EDGES OR SURFACES. WALL SURFACES ADJACENT TO HANDRAIL SHALL BE SMOOTH. CBC 11B.505.6 TO 11B.505.8.

ACCESSIBLE PLUMBING FIXTURES

NOTES

1. TOILET FLUSH CONTROLS SHALL BE OPERABLE WITH ONE HAND, AND SHALL NOT REQUIRE TIGHT GRASPING, PINCHING, OR TWISTING OF THE WRIST. CONTROLS FOR THE FLUSH VALVES SHALL BE MOUNTED ON THE WIDE SIDE OF THE TOILET AREA AS INDICATED AND 36" MAXIMUM ABOVE FINISH FLOOR. THE FORCE REQUIRED TO ACTIVATE CONTROLS SHALL BE NO GREATER THAN 5-POUNDS.
2. HOT WATER AND DRAIN PIPES UNDER LAVATORIES SHALL BE INSULATED OR OTHERWISE COVERED. THERE SHALL BE NO SHARP OR ABRASIVE SURFACES UNDER LAVATORIES.
3. FAUCET CONTROLS AND OPERATING MECHANISMS SHALL BE OPERABLE WITH ONE HAND AND SHALL NOT REQUIRE TIGHT GRASPING, PINCHING OR TWISTING OF THE WRIST. THE FORCE REQUIRED TO ACTIVATE CONTROLS SHALL BE NO GREATER THAN 5-POUNDS. LEVER OPERATED, PUSH TYPE AND ELECTRONICALLY CONTROLLED MECHANISMS ARE EXAMPLES OF ACCEPTABLE DESIGNS. SELF-CLOSING VALVES ARE ALLOWED IF THE FAUCET REMAINS OPEN FOR AT LEAST 10 SECONDS.
4. A GRAB BAR OR ANY WALL OR OTHER SURFACE ADJACENT TO IT SHALL BE FREE OF ANY SHARP OR ABRASIVE ELEMENTS.
5. GRAB BARS SHALL NOT ROTATE WITHIN THEIR FITTINGS.
6. EDGES SHALL HAVE A MINIMUM RADIUS OF 1/8 INCH.
7. THE DRINKING FOUNTAIN SHALL BE ACTIVATED BY A CONTROL WHICH IS EASILY OPERATED BY A DISABLED PERSON SUCH AS A HAND OPERATED LEVER TYPE CONTROL LOCATED WITHIN 6-INCHES OF THE FRONT OF THE DRINKING FOUNTAIN. THE SPOUT SHALL BE LOCATED 15-INCHES MINIMUM FROM THE VERTICAL SUPPORT AND 5-INCHES MAXIMUM FROM THE FRONT EDGE OF THE UNIT, INCLUDING BUMPERS AND SHALL BE 36-INCHES MAXIMUM ABOVE THE FINISH FLOOR OR GROUND. THE WATER STREAM FROM THE SPOUT SHALL PROVIDE A FLOW OF WATER 4 INCHES HIGH MIN. AND BE SUBSTANTIALLY PARALLEL TO THE FRONT OF THE DRINKING FOUNTAIN.
8. ROUGH-IN FOR FIXTURES, EQUIPMENT, AND APPLIANCES SHALL BE AS INDICATED ON DRAWINGS AND AS SPECIFIED, INCLUDING THOSE ITEMS INDICATED AS FURNISHED BY OTHERS, FURNISHED BY OWNER, OR FUTURE CAPACITY. WHEN CONNECTIONS TO EQUIPMENT FROM CAPPED OR PLUGGED LINES ARE REQUIRED, CAPS OR PLUGS SHALL BE REMOVED AT TIME EQUIPMENT IS SET AND STOPS OR VALVES INSTALLED AND CONNECTIONS PROVIDED AS SPECIFIED.
9. UNLESS OTHERWISE INDICATED, FIXTURES SHALL BE INSTALLED WITH 5/16" BRASS BOLTS OR SCREWS OF SUFFICIENT LENGTH TO SECURE FIXTURE TO BACKING, WALL OR CLOSET RINGS.
10. FIXTURES INSTALLED AGAINST CONCRETE OR MASONRY WALLS SHALL HAVE THEIR HANGERS FASTENED WITH THE 5/16" BOLTS, PHILIP SHIELD TYPE ANCHORS, OR 2 UNIT CINCH ANCHORS. WOOD OR PLASTIC PLUGS ARE NOT PERMITTED.
11. BACKING FOR HANGING OF PLUMBING FIXTURE AND EQUIPMENT SHALL BE INSTALLED IN SUPPORTING WALL AT TIMES ROUGH PIPING IS INSTALLED.
12. FOR WOOD STUDS USE STEEL PLATE 1/4" THICK, NOT LESS THAN 4 TO 6 INCHES WIDE STEEL PLATE SHALL BE ATTACHED TO STUD AT EACH END OF PLATE TO EACH STUD IT CRESSES. PLATE SHALL HAVE 2 PRE- DRILLED 1/8" HOLES FOR NO. 14 FLAT HEAD SCREWS 2 INCHES IN LEGNTH FROM EACH STUD.
13. FOR METAL STUDS USE STEEL PLATE 1/4" THICK, NOT LESS THAN 4 INCHES WIDE STEEL PLATE SHALL BE ATTACHED TO STUD AT EACH END OF PLATE TO EACH STUD IT CRESSES. PLATE SHALL BE ATTACHED TO METAL STUDS BY BOLTING WITH TWO 1/4" "U BOLTS" PER STUD WITH BOLTS THROUGH PLATE AND AROUND STUD FLANGE OR BY WELDING WITH 1/8" FILLET WELD FULL WIDTH OF STUD FLANGE, TOP AND BOTTOM OF PLATE. SEE 1/A5.06.
14. PIPING SHALL BE STUBBED OUT TO EXACT LOCATION OF FIXTURES AND STUBS SHALL BE INSTALLED SYMMETRICALLY WITH FIXTURES. HOT AND COLD WATER SUPPLIES FOR CENTER SET FAUCETS ON LAVATORIES SHALL BE INSTALLED ON 8 INCH CENTERS, UNLESS OTHER WISE SPECIFIED OR REQUIRED.

ACCESSORIES INFORMATION

1. THE GRAB BAR SHALL NOT PROJECT MORE THAN 3" INTO THE 48" MINIMUM CLEAR SPACE IN FRONT OF THE WATER CLOSET. GRAB BAR AND CONNECTIONS SHALL HAVE STRENGTH TO ALLOW 250 LB HORIZONTAL OR VERTICAL POINT FORCE.
2. TOILET PAPER AND FEMININE NAPKIN DISPOSALS SHALL BE LOCATED AT THE GRAB BAR SIDE OF AN ACCESSIBLE TOILET ROOM OR STALL. THE ACCESSORY SHALL NOT BE LOCATED CLOSER THAN 1 1/2" CLEAR OF THE TANGENT POINT OF THE GRAB BAR.

DIVISION OF THE STATE ARCHITECT

IDENTIFICATION STAMP
DIV. OF THE STATE ARCHITECT
APP: 03-123218 INC:
REVIEWED FOR
SS ☑ FLS ☑ ACS ☑
DATE: 07/11/2024

MOORPARK COLLEGE

7075 CAMPUS RD
MOORPARK, CA 93021
TEL: (805) 378 - 1400

PROJECT TITLE AND SCHOOL LOCATION

ADMINISTRATION BUILDING SEISMIC REHABILITATION AND RENOVATION
7075 CAMPUS ROAD
MOORPARK, CA 91320

COMMISSIONED ARCHITECT

AMADOR

amador whittle architects, inc.
28328 AGOURA RD, 203 | AGOURA HILLS CA. 91301 | 805-558-4334

CONSULTANT

STAMPS/SEALS

LICENSED ARCHITECT JAN ANN AMADOR C-22205 APRIL 30, 2025 DATE STATE OF CALIFORNIA

1/9/24	DSA V2
8/23/23	DSA V1

SHEET TITLE:

ACCESSIBILITY DETAILS

PROJECT NO: 21-MPC-040	PROJECT ARCH:
DRAWN: GW	CHECKED:
SHEET NUMBER: G002	
DATE: 1/9/24	SHEET: ___ OF ___

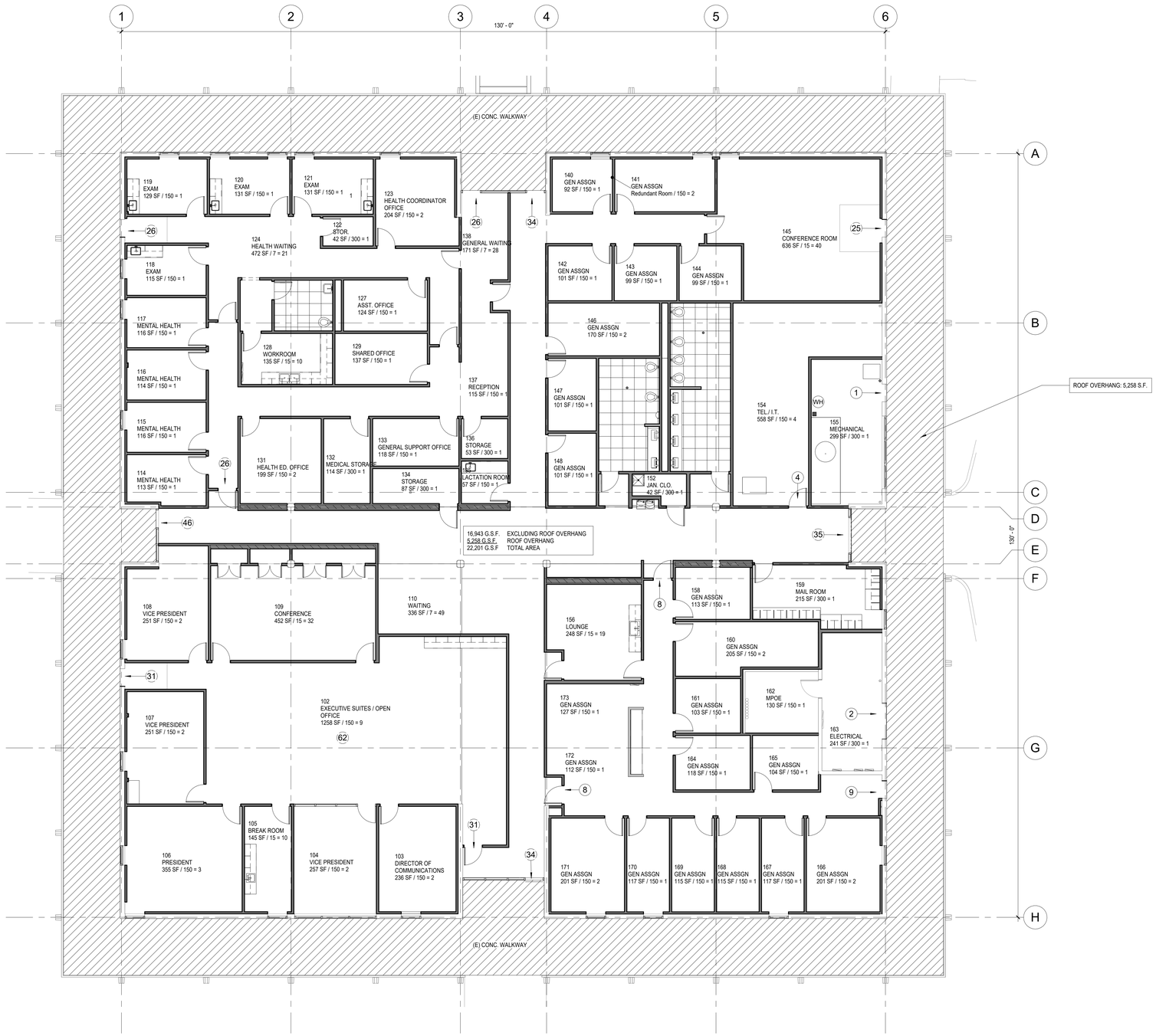

EGRESS PLAN | 1/8" = 1'-0" | 1

OCCUPANCY ANALYSIS

ROOM #	USE OF ROOM	FLOOR AREA	OCCUPANT FACTOR	TOTAL OCCUPANTS
100	HALLWAY	309 SF		
101	WAITING	52 SF		TOTAL
102	EXECUTIVE SUITES / OPEN OFFICE	1258 SF	150	9
102A	HALLWAY	30 SF		
103	DIRECTOR OF COMMUNICATIONS	236 SF	150	2
104	VICE PRESIDENT	257 SF	150	2
105	BREAK ROOM	145 SF	15	10
106	PRESIDENT	355 SF	150	3
107	VICE PRESIDENT	251 SF	150	2
108	VICE PRESIDENT	251 SF	150	2
109	CONFERENCE	452 SF	15	32
110	WAITING	336 SF	7	49
111	CLO.	35 SF		
112A	CLO.	15 SF		
112B	CLO.	16 SF		
113	HALLWAY	1023 SF		
114	MENTAL HEALTH	113 SF	150	1
115	MENTAL HEALTH	116 SF	150	1
116	MENTAL HEALTH	114 SF	150	1
117	MENTAL HEALTH	116 SF	150	1
118	EXAM	115 SF	150	1
119	EXAM	129 SF	150	1
120	EXAM	131 SF	150	1
121	EXAM	131 SF	150	1
122	STOR.	42 SF	300	1
123	HEALTH COORDINATOR OFFICE	204 SF	150	2
124	HEALTH WAITING	472 SF	7	21
125	VEST.	47 SF		
126	ALL GENDER RESTROOM	86 SF		
127	ASST. OFFICE	124 SF	150	1
128	WORKROOM	135 SF	15	10
129	SHARED OFFICE	137 SF	150	1
130	HALLWAY	367 SF		
131	HEALTH ED. OFFICE	199 SF	150	2
132	MEDICAL STORAGE	114 SF	300	1
133	GENERAL SUPPORT OFFICE	118 SF	150	1
134	STORAGE	87 SF	300	1
135	LACTATION ROOM	57 SF	150	1
136	STORAGE	53 SF	300	1
137	RECEPTION	115 SF	150	1
138	GENERAL WAITING	171 SF	7	28
139	HALLWAY	473 SF		
140	GEN ASSGN	92 SF	150	1
141	GEN ASSGN	Redundant Room	150	2
141	GEN ASSGN	154 SF		
142	GEN ASSGN	101 SF	150	1
143	GEN ASSGN	99 SF	150	1
144	GEN ASSGN	99 SF	150	1
145	CONFERENCE ROOM	636 SF	15	40
146	GEN ASSGN	170 SF	150	2
147	GEN ASSGN	101 SF	150	1
148	GEN ASSGN	101 SF	150	1
149	MENS RESTROOM	198 SF		
150	VEST.	28 SF		
151	WOMENS RESTROOM	291 SF		
152	JAN. CLO.	42 SF	300	1
153	VEST.	38 SF		
154	TEL / I.T.	558 SF	150	4
155	MECHANICAL	299 SF	300	1
156	LOUNGE	248 SF	15	19
157	HALLWAY	278 SF		
158	GEN ASSGN	113 SF	150	1
159	MAIL ROOM	215 SF	300	1
160	GEN ASSGN	205 SF	150	2
161	GEN ASSGN	103 SF	150	1
162	MPOE	130 SF	150	1
163	ELECTRICAL	241 SF	300	1
164	GEN ASSGN	118 SF	150	1
165	GEN ASSGN	104 SF	150	1
166	GEN ASSGN	201 SF	150	2
167	GEN ASSGN	117 SF	150	1
168	GEN ASSGN	115 SF	150	1
169	GEN ASSGN	115 SF	150	1
170	GEN ASSGN	117 SF	150	1
171	GEN ASSGN	201 SF	150	2
172	GEN ASSGN	112 SF	150	1
173	GEN ASSGN	127 SF	150	1
174	HALLWAY	183 SF		

CODE ANALYSIS

EXISTING ADMINISTRATION BUILDING

ALTERATIONS SHALL COMPLY WITH SFM ADOPTED SECTIONS OF CBC 2022, CHAPTER 35, AND CBC CHAPTER 7A

A. OCCUPANCY TYPE : B (OFFICES AND HEALTH CLINIC)

B. CONSTRUCTION TYPE: V - B, FULLY SPRINKLERED (S1)

C. NUMBER OF STORIES: ONE

D. ALLOWABLE BUILDING HEIGHT : 60'-0" (TABLE 504.3)
ACTUAL HEIGHT: 15'-0"

E. AREA ANALYSIS:

1.	BASIC ALLOWABLE AREA:	36,000 S.F.	(TABLE 506.2) B-S1-TYPE V-B
2.	ACTUAL FLOOR AREA:	16,943 G.S.F.	EXCLUDING ROOF OVERHANG
		5,258 G.S.F.	ROOF OVERHANG
		22,201 G.S.F	TOTAL AREA

F. FIRE SPRINKLERS: FULLY SPRINKLERED

G. WILDLAND- URBAN INTERFACE (WUI) FIRE AREA AND APPLICABLE PROVISIONS OF CBC CHAPTER 7A

- SECTION 705A: CLASS 'A' ROOFING
- SECTION 706A: VENTILATION OPENINGS SHALL BE WUI VENTS TESTED TO ASTM E2886 AND LISTED
- SECTION 707A.3: EXTERIOR WALL COVERINGS ARE NON-COMBUSTIBLE (EXTERIOR PLASTER & CONCRETE MASONRY UNITS)
- SECTION 707A.6: ENCLOSED ROOF EAVES AND ROOF EAVE SOFFITS: NON-COMBUSTIBLE MATERIALS (EXTERIOR PLASTER)
- SECTION 708A.2 EXTERIOR GLAZING SHALL BE DUAL PANED WITH A MINIMUM OF ONE TEMPERED PANE MEETING REQUIREMENTS OF SECTION 2406 SAFETY GLAZING
- 708A.3 EXTERIOR DOORS SHALL COMPLY WITH THE PROVISIONS OF 708A.3.

TABLE 1006.2.1
COMMON PATH OF EGRESS TRAVEL

OCCUPANCY	WITH SPRINKLER SYSTEM
B	100'

TABLE 1017.2
EXIT ACCESS TRAVEL DISTANCE

OCCUPANCY	WITH SPRINKLER SYSTEM
B	300'

NOTES:

1. BUILDING IS CLASSIFIED AS GROUP B PER 2022 CBC 508.3, NONSEPARATED OCCUPANCIES.
2. IN A SPRINKLERED BUILDING, THE EXIT DOORS OR EXIT ACCESS DOORWAYS SHALL BE A MINIMUM OF ONE-THIRD THE DIAGONAL DIMENSION OF THE AREA SERVED. CBC 1015.2.1, EXCEPTION 2.
3. ALL EXITS HAVE ACCESS TO PUBLIC WAY.
4. EGRESS THROUGH INTERVENING SPACES WHICH ARE ACCESSORY TO EACH OTHER IS ALLOWED PER CBC 1016.2.

LEGEND

ROOM TAG — ROOM NO. / ROOM NAME / S.F. OF ROOM / OCCUPANT FACTOR — 222 / OFFICE: B / 100 SF/100 = 1 — OCCUPANCY TYPE

DIRECTION OF TRAVEL

NUMBER OF OCCUPANTS (27)

1-HR WALL

PORTABLE FIRE EXTINGUISHER IN SEMI-RECESSED METAL CABINET. TYPE 2A-10-BC NEW OR EXISTING AS INDICATED — F E (N) F E (E)

DIVISION OF THE STATE ARCHITECT

IDENTIFICATION STAMP
DIV. OF THE STATE ARCHITECT
APP: 03-123218 INC:
REVIEWED FOR
SS ☑ FLS ☑ ACS ☑
DATE: 07/11/2024

MOORPARK COLLEGE

7075 CAMPUS RD
MOORPARK, CA 93021
TEL: (805) 378 - 1400

PROJECT TITLE AND SCHOOL LOCATION

ADMINISTRATION BUILDING SEISMIC REHABILITATION AND RENOVATION
7075 CAMPUS ROAD
MOORPARK, CA 91320

COMMISSIONED ARCHITECT

AMADOR

amador whittle architects, inc.
28328 AGOURA RD, 203 | AGOURA HILLS CA. 91301 | 805-558-4334

CONSULTANT

STAMPS/SEALS

LICENSED ARCHITECT JEAN ANN AMADOR C-22295 APRIL 30, 2025 STATE OF CALIFORNIA
DATE

1/9/24	DSA V2
8/23/23	DSA V1

SHEET TITLE:

EGRESS PLAN

PROJECT NO: 21-MPC-040 | PROJECT ARCH:
DRAWN: GW | CHECKED:
SHEET NUMBER:

G003

DATE: 1/9/24 | SHEET: ___ OF ___

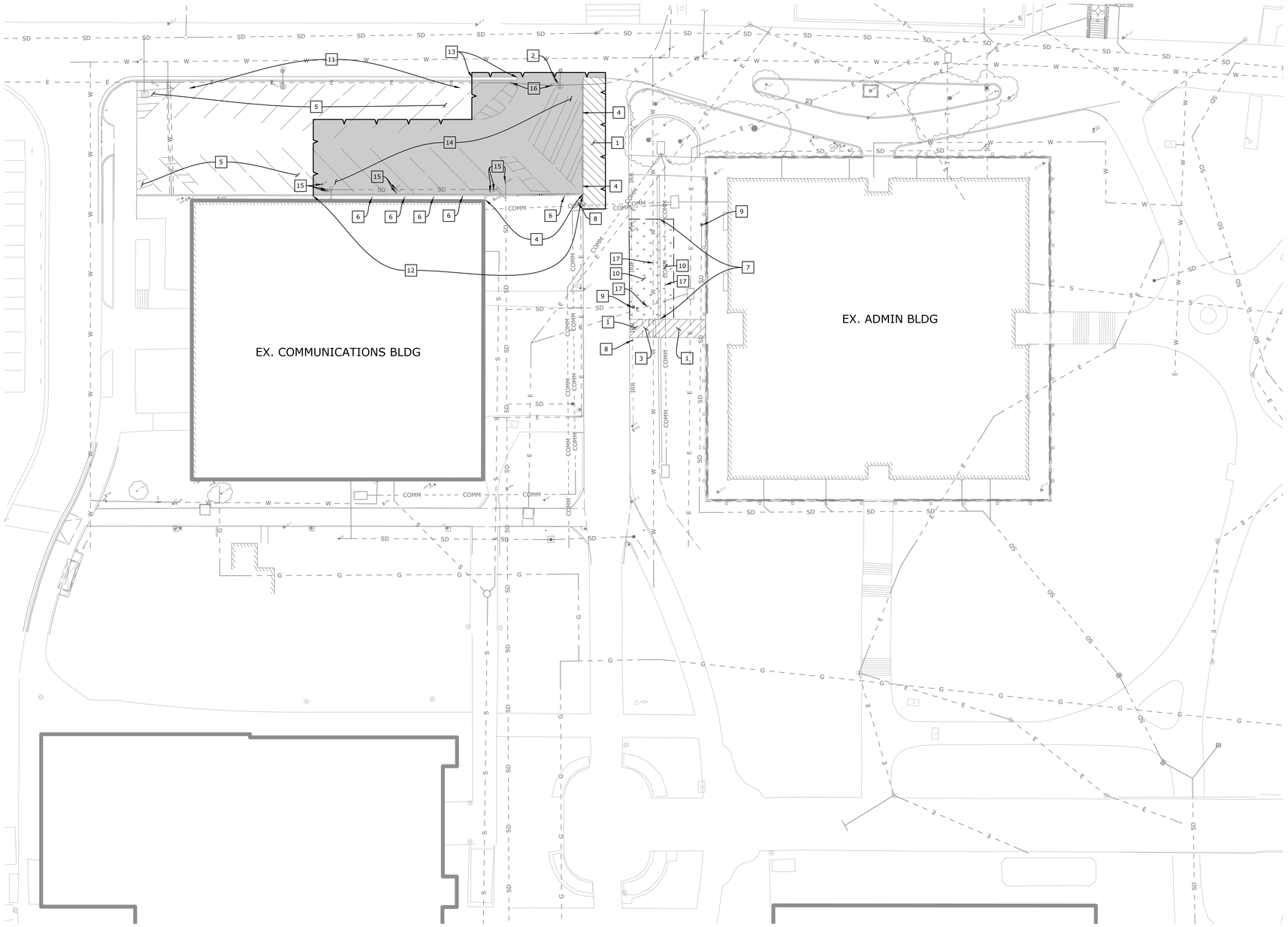

DEMOLITION NOTES

1. SAWCUT AND REMOVE EXISTING PC CONCRETE TO LIMITS SHOWN.
2. RELOCATE EXISTING STREET LIGHT PER ELECTRICAL ENGINEER'S PLAN. SEE PRELIMINARY GRADING PLAN FOR NEW LOCATION.
3. REMOVE EXISTING STAIRS AND HAND RAILS.
4. REMOVE EXISTING GUARD RAIL.
5. SANDBLAST AND REMOVE EXISTING STRIPING TO LIMITS SHOWN.
6. REMOVE EXISTING ADA PARKING SIGN.
7. REMOVE EXISTING CONCRETE MOW CURB TO LIMITS SHOWN.
8. PROTECT EXISTING LIGHT POLE IN PLACE.
9. PROTECT EXISTING STORM DRAIN CATCH BASIN IN PLACE.
10. REMOVE/REGRADE EXISTING LANDSCAPED AREA.
11. REMOVE EXISTING CONCRETE WHEEL STOPS.
12. REMOVE EXISTING RETAINING CURB TO LIMITS SHOWN.
13. REMOVE EXISTING CURB AND GUTTER TO LIMITS SHOWN.
14. SAWCUT AND REMOVE EXISTING AC PAVEMENT TO LIMITS SHOWN.
15. ADJUST CLEANOUT/VALVE TO FINISH SURFACE.
16. ADJUST ELECTRICAL PULL BOX TO FINISH SURFACE.
17. PROTECT EXISTING UTILITY IN PLACE. CONTRACTOR TO FIELD VERIFY LOCATION AND DEPTH AND NOTIFY ENGINEER OF ANY CONFLICTS PRIOR TO CONSTRUCTION.

DEMOLITION LEGEND

- SAWCUT EXISTING PAVEMENT
- EXISTING PC CONCRETE TO BE REMOVED
- EXISTING AC PAVEMENT TO BE REMOVED
- EXISTING LANDSCAPED AREA TO BE REMOVED/REGRADED

EXISTING UTILITIES NOTE

EXACT SIZE, DEPTH AND LOCATION OF EXISTING UTILITIES ARE UNKNOWN. CONTRACTOR TO FIELD VERIFY SIZE, DEPTH AND LOCATION OF ALL UTILITIES IN AND AROUND THE CONSTRUCTION AREA AND NOTIFY ENGINEER OF ANY CONFLICTS PRIOR TO CONSTRUCTION.

N E S W

SCALE: 1"=20'

0 20 40 60

DIGALERT
DIAL TOLL FREE
1-800-422-4133
AT LEAST TWO DAYS BEFORE YOU DIG
UNDERGROUND SERVICE ALERT OF SOUTHERN CALIFORNIA

DIVISION OF THE STATE ARCHITECT

IDENTIFICATION STAMP
DIV. OF THE STATE ARCHITECT
APP: 03-123218 INC:
REVIEWED FOR
SS ☑ FLS ☑ ACS ☑
DATE: 07/11/2024

AMADOR WHITTLE
ARCHITECTS, INC.
28328 AGOURA ROAD, SUITE 203
AGOURA HILLS, CA 91301
(805) 530-3938 , (818) 874-0071

Ventura County Community College

PROJECT TITLE

ADMINISTRATION BUILDING RENOVATION

7075 CAMPUS ROAD
MOORPARK, CA 91320

CONSULTANT

REGISTERED PROFESSIONAL ENGINEER
GLEN H. PAGE
NO 61468
CIVIL
STATE OF CALIFORNIA

ECG
Encompass Consultant Group
315 N. LANTANA ST, SUITE 307, CAMARILLO, CA 93010
PHONE: 805.322.4442 WEBSITE: WWW.ECGCIVIL.COM

STAMPS/SEALS

LICENSED ARCHITECT
JEAN ANN AMADOR
C-22205
APRIL 30, 2025
DATE
STATE OF CALIFORNIA

SHEET TITLE:

DEMOLITION PLAN
100% CD

PROJECT NO.: 21-MPC-040	PROJECT ARCH:
DRAWN: JDJ	CHECKED:

SHEET NUMBER:

C100

DATE: 01/02/2024 SHEET: ___ OF ___

IF THIS SHEET IS NOT 30" X 42", IT IS NOT FULL SIZE, SCALE ACCORDINGLY

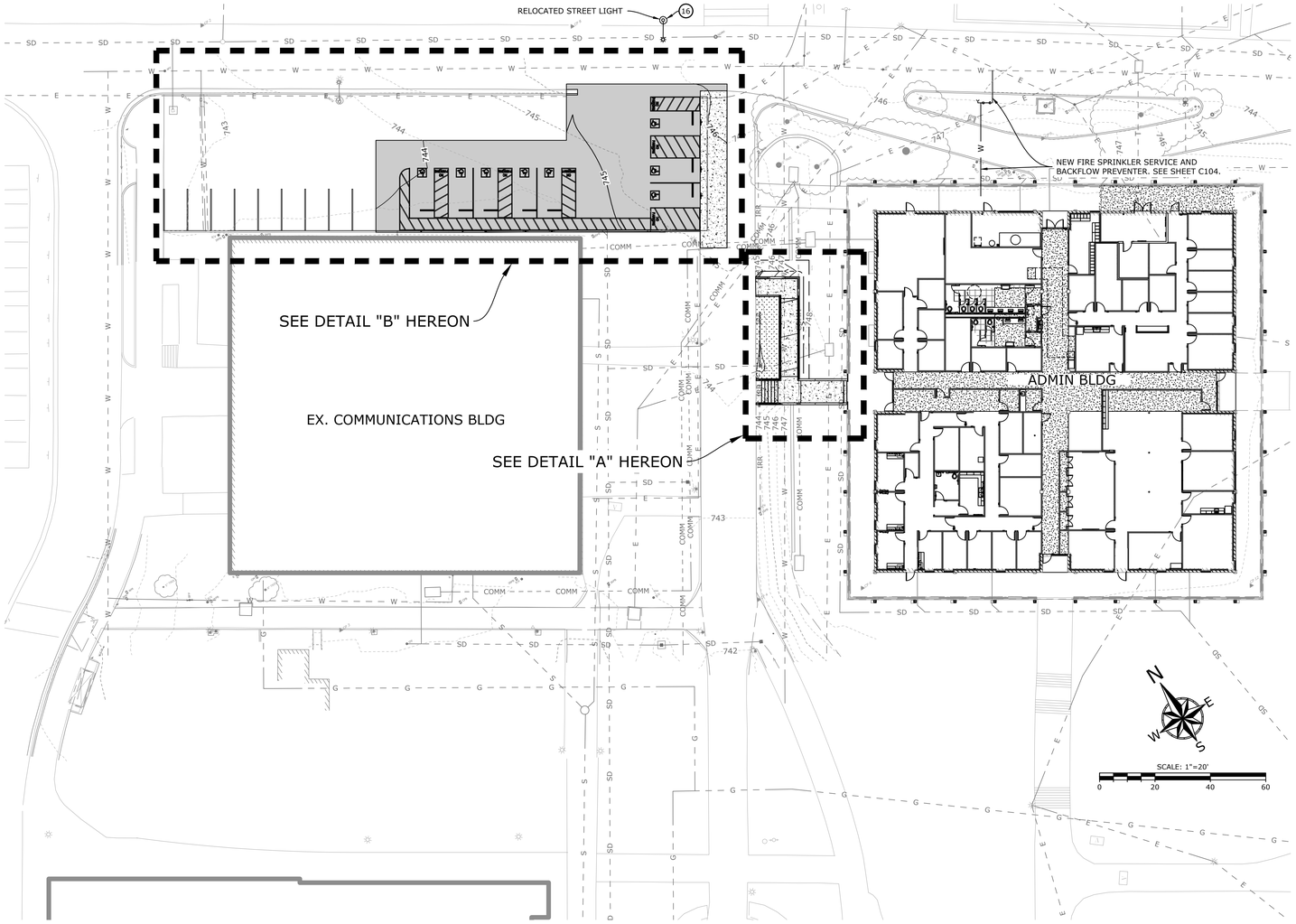

OVERALL SITE
SCALE: 1"=20'

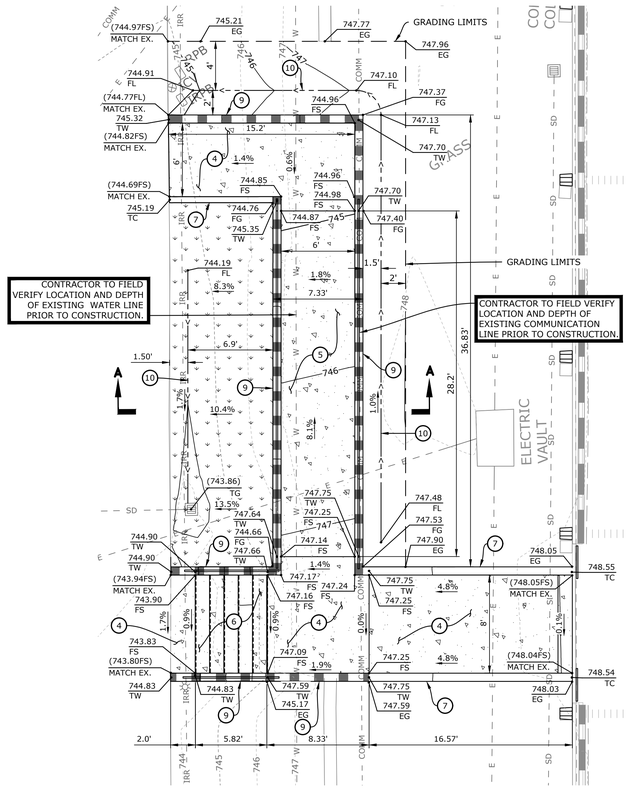

DETAIL "A"
SCALE: 1"=5'

EXISTING UTILITIES NOTE

EXACT SIZE, DEPTH AND LOCATION OF EXISTING UTILITIES ARE UNKNOWN. CONTRACTOR TO FIELD VERIFY SIZE, DEPTH AND LOCATION OF ALL UTILITIES IN AND AROUND THE CONSTRUCTION AREA AND NOTIFY ENGINEER OF ANY CONFLICTS PRIOR TO CONSTRUCTION.

CONSTRUCTION NOTES

1. CONSTRUCT BLUE ADA STRIPING AND NEW SIGNAGE AS SHOWN AND PER DETAILS "A" AND "B" ON SHEET C103.
2. CONSTRUCT 4" WHITE PARKING STRIPING AS SHOWN.
3. CONSTRUCT DETECTABLE WARNING SURFACE ARMOR-TILE OR APPROVED EQUAL. COLOR PER ARCHITECT'S PLAN.
4. CONSTRUCT 4" THICK PEDESTRIAN CONCRETE PAVING PER DETAILS "E" - "H" ON SHEET C103.
5. CONSTRUCT CONCRETE RAMP AND HANDRAILS PER ARCHITECT'S PLAN. RAMP TO HAVE MAXIMUM SLOPE OF 1:12 (8.33%).
6. CONSTRUCT CONCRETE STAIRS AND HANDRAILS PER ARCHITECT'S PLAN. CONSTRUCT 6 RISERS, EACH AT 6.5" HEIGHT.
7. CONSTRUCT 6" CONCRETE CURB PER SPPWC STD. PLAN 120-2.
8. CONSTRUCT 1' LONG VARIABLE CURB HEIGHT FROM 0" TO 6".
9. CONSTRUCT RETAINING WALL FOR STAIRS/RAMP PER ARCHITECT'S PLAN.
10. CONSTRUCT EARTHEN FLOW LINE AS SHOWN.
11. CONSTRUCT CONCRETE WHEEL STOP AS SHOWN AND PER DETAIL "C" ON SHEET C103.
12. CONSTRUCT 3" AC OVER 6" CAB OR MATCH EXISTING PAVEMENT SECTION (WHICHEVER IS THICKER) TO LIMITS SHOWN PER DETAIL "D" ON SHEET C103.
13. CONSTRUCT RETAINING CURB PER DETAIL "J" ON SHEET C103.
14. CONSTRUCT VARIABLE HEIGHT CURB AND 18" GUTTER PER SPPWC STD. PLAN 120-2.
15. CONSTRUCT 0" CURB PER SPPWC STD. PLAN 120-2.
16. RELOCATED STREET LIGHT.

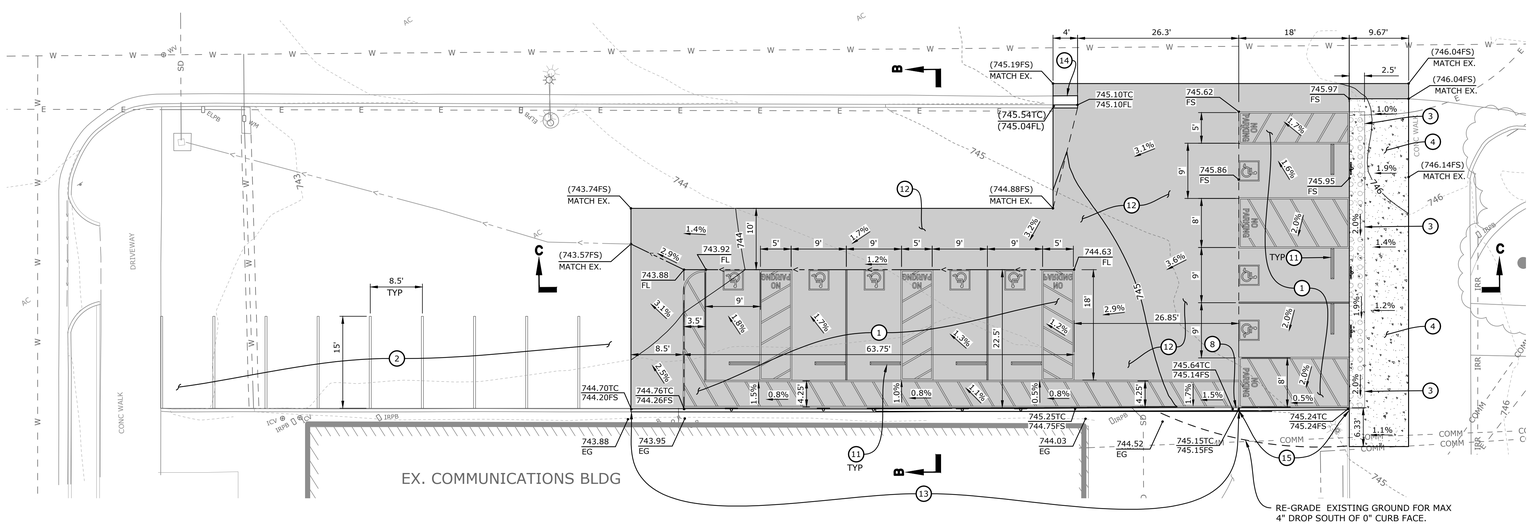

DETAIL "B"
SCALE: 1"=10'

CONSTRUCTION LEGEND

- PROPOSED PC CONCRETE
- PROPOSED AC PAVEMENT
- PROPOSED LANDSCAPING

DIGALERT
DIAL TOLL FREE
1-800-422-4133
AT LEAST TWO DAYS BEFORE YOU DIG
UNDERGROUND SERVICE ALERT OF SOUTHERN CALIFORNIA

DIVISION OF THE STATE ARCHITECT
IDENTIFICATION STAMP
DIV. OF THE STATE ARCHITECT
APP: 03-123218 INC:
REVIEWED FOR
SS ☑ FLS ☑ ACS ☑
DATE: 07/11/2024

AMADOR WHITTLE
ARCHITECTS, INC.
28328 AGOURA ROAD, SUITE 203
AGOURA HILLS, CA 91301
(805) 530-3938 , (818) 874-0071

Ventura County Community College

PROJECT TITLE

ADMINISTRATION BUILDING RENOVATION

7075 CAMPUS ROAD
MOORPARK, CA 91320

CONSULTANT

REGISTERED PROFESSIONAL ENGINEER GLEN H. PAGE NO 61468 CIVIL STATE OF CALIFORNIA

ECG
Encompass Consultant Group
310 N. LAVERN ST. SUITE 207, OXNARD, CA 93033
PHONE: 805.312.4442 WEBSITE: WWW.ECGOXN.COM

STAMPS/SEALS

LICENSED ARCHITECT JEAN ANN AMADOR C-22205 APRIL 30, 2025 DATE STATE OF CALIFORNIA

SHEET TITLE:

GRADING PLAN
100% CD

PROJECT NO: 21-MPC-040	PROJECT ARCH:
DRAWN: JDJ	CHECKED:

SHEET NUMBER:

C101

DATE: 01/02/2024 SHEET: ___ OF ___

IF THIS SHEET IS NOT 30" X 42", IT IS NOT FULL SIZE. SCALE ACCORDINGLY

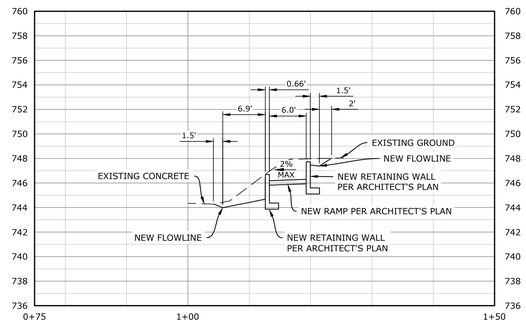

SECTION "A" (A)

SCALE: 1"=10' HORZ
1"=5' VERT

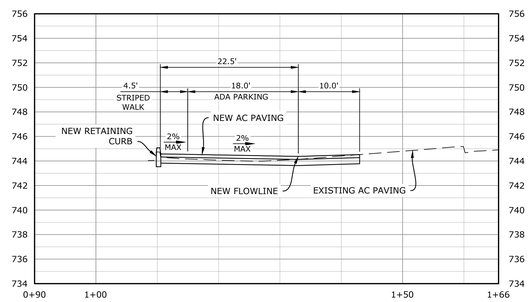

SECTION "B" (B)

SCALE: 1"=10' HORZ
1"=5' VERT

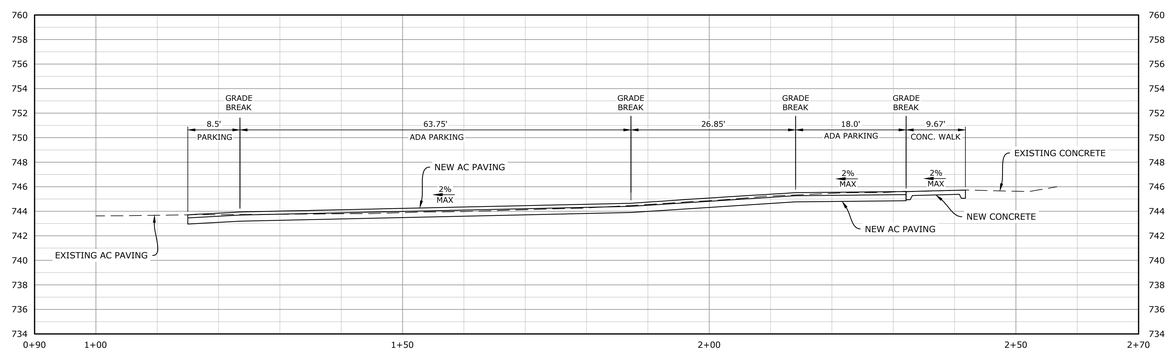

SECTION "C" (C)

SCALE: 1"=10' HORZ
1"=5' VERT

DIGALERT
DIAL TOLL FREE
1-800-422-4133
AT LEAST TWO DAYS BEFORE YOU DIG
UNDERGROUND SERVICE ALERT OF SOUTHERN CALIFORNIA

DIVISION OF THE STATE ARCHITECT
IDENTIFICATION STAMP
DIV. OF THE STATE ARCHITECT
APP: 03-123218 INC:
REVIEWED FOR
SS ☑ FLS ☑ ACS ☑
DATE: 07/11/2024

AMADOR WHITTLE
ARCHITECTS, INC.
28328 AGOURA ROAD, SUITE 203
AGOURA HILLS, CA 91301
(805) 530-3938 , (818) 874-0071

Ventura County Community College

PROJECT TITLE

ADMINISTRATION BUILDING RENOVATION

7075 CAMPUS ROAD
MOORPARK, CA 91320

CONSULTANT

REGISTERED PROFESSIONAL ENGINEER
GLEN H. PAGE
NO 61468
CIVIL
STATE OF CALIFORNIA

ECG
Encompass Consultant Group
310 N. LAVERN ST. SUITE 207, OXNARD, CA 93033
PHONE: 805.322.4443 WEBSITE: WWW.ECGOVLLCCOM

STAMPS/SEALS

LICENSED ARCHITECT
JEAN ANN AMADOR
C-22205
APRIL 30, 2025
DATE
STATE OF CALIFORNIA

SHEET TITLE:

SITE SECTIONS
100% CD

PROJECT NO.: 21-MPC-040	PROJECT ARCH:
DRAWN: JDJ	CHECKED:

SHEET NUMBER:

C102

DATE: 01/02/2024 SHEET: ___ OF ___

IF THIS SHEET IS NOT 30" X 42", IT IS NOT FULL SIZE, SCALE ACCORDINGLY

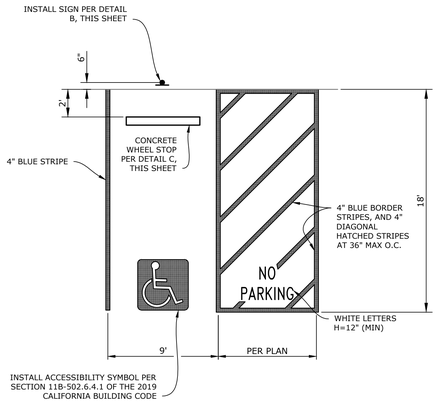

ACCESSIBLE PARKING DETAIL

N.T.S.

A
-

NOTES:

1. SIGN TO BE CENTERED AT THE INTERIOR END OF PARKING SPACE. THE BOTTOM OF THE SIGN PANEL SHALL BE A MINIMUM OF 80" ABOVE THE FINISH SURFACE.

ACCESSIBLE PARKING SIGNAGE

N.T.S.

B
-

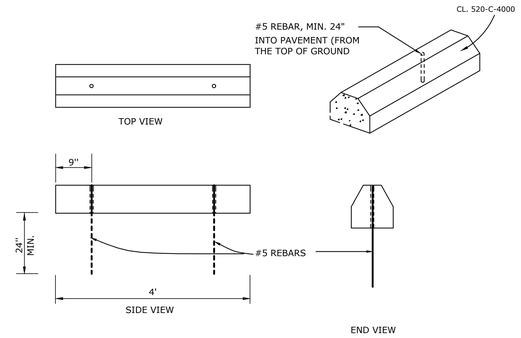

CONCRETE WHEEL STOP

N.T.S.

C
-

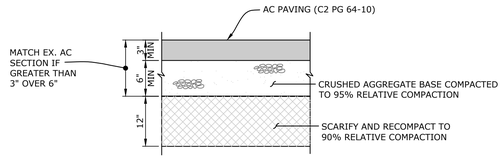

AC PAVEMENT SECTION

SCALE: N.T.S.

D
-

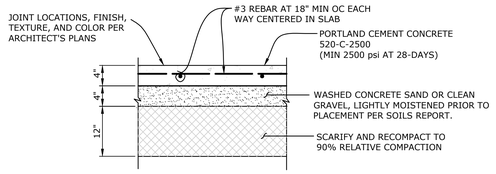

NOTES:

1. CONSTRUCT THICKENED EDGE AT WALKWAY PERIMETER PER DETAIL "F" THIS SHEET
2. SAWCUT OR TOOLED CRACK CONTROL JOINTS AT 8' MAX O.C. E.W. PER DETAIL "G" THIS SHEET
3. CONSTRUCT EXPANSION JOINTS AT ADJACENT STRUCTURES OR EXISTING PAVING PER DETAIL "H" THIS SHEET

PCC WALKWAY PAVEMENT SECTION

SCALE: N.T.S.

E
-

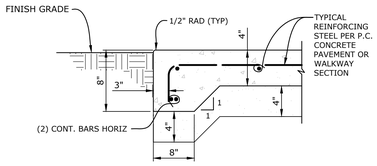

PCC PAVEMENT OR WALKWAY THICKENED EDGE

SCALE: N.T.S.

F
-

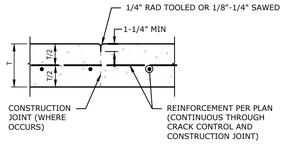

NOTES:

1. SEE SPECIFICATIONS FOR TYPE OF JOINT SEALANT.
2. CONSTRUCTION JOINTS SHALL ONLY BE LOCATED WHERE A CRACK CONTROL JOINT OR OTHER JOINT WOULD OTHERWISE HAVE BEEN REQUIRED.
3. SEE PLAN FOR THICKNESS, T.
4. FOR CRACK CONTROL JOINTS LOCATIONS, SEE ARCH. PLANS.
5. CRACK CONTROL JOINTS TO BE SPACED AT 8' MAX O.C. E.W.

CONSTRUCTION/CRACK CONTROL JOINT

SCALE: N.T.S.

G
-

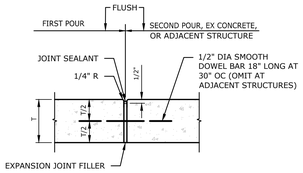

NOTES:

1. SEE SPECIFICATIONS FOR TYPE OF JOINT SEALANT & EXPANSION JOINT FILLER.
2. USE SMOOTH BARS FOR DOWELS COATED TO PREVENT BOND, GREASE ONE END PRIOR TO SECOND POUR.
3. SEE PLAN FOR THICKNESS, T.
4. PROVIDE ADEQUATE SUPPORT FOR DOWELS TO ENSURE THEY REMAIN LEVEL WITH FINISH SURFACE.
5. STOP SLAB REINFORCING AT EXPANSION JOINTS.

EXPANSION JOINT

SCALE: N.T.S.

H
-

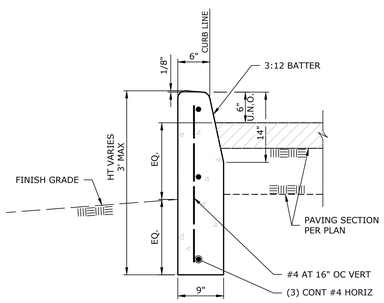

NOTES:

1. CONCRETE SHALL BE CLASS 560-C-3250.
2. REINFORCEMENT SHALL BE GRADE 60.
3. EXPOSED EDGES SHALL HAVE A 1/2" TOOLED RADIUS.
4. SUBGRADE SOILS SHALL BE COMPACTED TO 90% RELATIVE COMPACTION.
5. INSTALL WEAKENED PLANE JOINTS AT 12' MAX SPACING.

RETAINING CURB

SCALE: N.T.S.

J
-

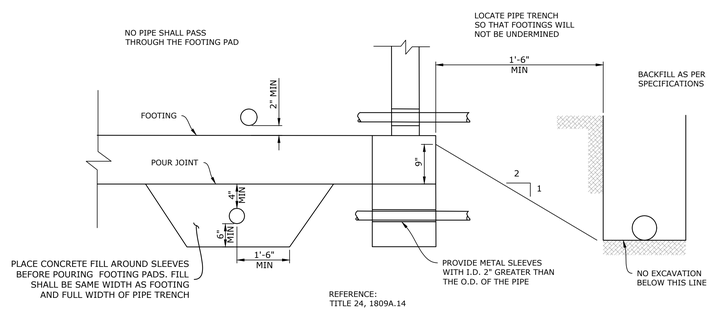

REFERENCE:
TITLE 24, 1809A.14

TYPICAL PIPE TRENCH OR DUCT BANK AND FOOTING DETAIL

SCALE: N.T.S.
SEE STRUCTURAL PLANS: DETAIL 11 ON SHEET S010

K
-

DIGALERT
DIAL TOLL FREE
1-800-422-4133
AT LEAST TWO DAYS BEFORE YOU DIG
UNDERGROUND SERVICE ALERT OF SOUTHERN CALIFORNIA

DIVISION OF THE STATE ARCHITECT

IDENTIFICATION STAMP
DIV. OF THE STATE ARCHITECT
APP: 03-123218 INC:
REVIEWED FOR
SS ☑ FLS ☑ ACS ☑
DATE: 07/11/2024

AMADOR WHITTLE
ARCHITECTS, INC.
28328 AGOURA ROAD, SUITE 203
AGOURA HILLS, CA 91301
(805) 530-3938 , (818) 874-0071

Ventura County Community College

PROJECT TITLE

ADMINISTRATION BUILDING RENOVATION

7075 CAMPUS ROAD
MOORPARK, CA 91320

CONSULTANT

REGISTERED PROFESSIONAL ENGINEER GLEN H. PAGE NO 61468 CIVIL STATE OF CALIFORNIA

ECG Encompass Consultant Group
333 N. LAFAYAN ST, SUITE 307, DENVER,CO. CA 92010
PHONE: 805.322.4442 WEBSITE: WWW.ECGCIVIL.COM

STAMPS/SEALS

LICENSED ARCHITECT JEAN ANN AMADOR C-22205 APRIL 30, 2025 DATE STATE OF CALIFORNIA

SHEET TITLE:

DETAILS
100% CD

PROJECT NO: 21-MPC-040	PROJECT ARCH:
DRAWN: JDJ	CHECKED:

SHEET NUMBER:

C103

DATE: 01/02/2024 SHEET: ___ OF ___

IF THIS SHEET IS NOT 30" X 42", IT IS NOT FULL SIZE, SCALE ACCORDINGLY

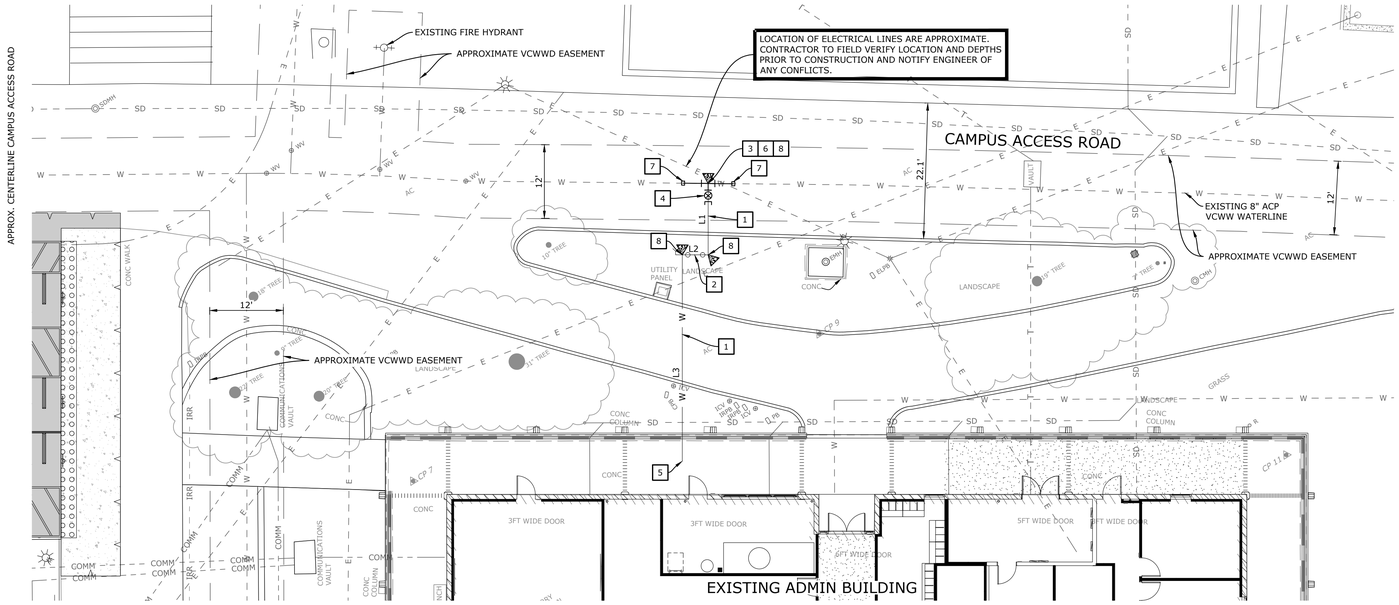

VENTURA COUNTY WATER & SANITATION DEPARTMENT GENERAL NOTES

1. ALL VENTURA COUNTY WATERWORKS DISTRICT NO. 1 SHALL BE CONSTRUCTED, AND WORK PERFORMED, IN ACCORDANCE WITH THE DISTRICT'S RULES AND REGULATIONS. ADDITIONALLY, CONFORM TO OR EXCEED, THE APPLICABLE LATEST EDITION AND SUPPLEMENTS OF THE A) VENTURA COUNTY STANDARD SPECIFICATIONS (VCSS); B) "GREENBOOK" STANDARD SPECIFICATIONS FOR PUBLIC WORKS CONSTRUCTION (SSPWC); C) STANDARD PLANS FOR PUBLIC WORKS CONSTRUCTION (SPPWC); D) STANDARDS AND MANUALS OF AMERICAN WATER WORKS ASSOCIATION (AWWA); E) CALIFORNIA BUILDING CODE (CBC); F) UNIFORM PLUMBING CODE (UPC); G) NATIONAL ELECTRIC CODE (NEC); H) VENTURA COUNTY WATERWORKS MANUAL; AND G) MANUFACTURER'S RECOMMENDATION, WHERE APPLICABLE. WHERE A CONFLICT OCCURS, THE MORE STRINGENT REQUIREMENT OR GUIDELINE SHALL GOVERN.
2. IN CASE OF EMERGENCY CONTACT DISTRICT AT (805) 378-3000.
3. CONTRACTOR SHALL COORDINATE A PRE-CONSTRUCTION MEETING WITH DISTRICT AT LEAST 5 WORKING DAYS PRIOR TO THE START OF CONSTRUCTION. SUBSEQUENTLY, CONTRACTOR SHALL NOTIFY THE DISTRICT BY CONTRACTOR REQUEST FORM AT LEAST 2 WORKING DAYS PRIOR TO START OF CONSTRUCTION.
4. CONTRACTOR SHALL SUBMIT A SHUTDOWN REQUEST TO THE DISTRICT FOR ANY TIE-IN. SHUTDOWN REQUESTS SHALL BE SUBMITTED IN WRITING TO THE DISTRICT WITH A MINIMUM 14 WORKING DAYS ADVANCE NOTICE PROVIDED. CONTRACTOR SHALL COMPLETE ALL FIELD PREPARATIONS REQUESTED BY DISTRICT FOR TIE-INS AT LEAST 3 WORKING DAYS PRIOR TO, FAILURE TO COMPLETE PREPARATIONS WILL RESULT IN SHUTDOWN BEING CANCELLED.
5. CONTRACTOR SHALL CONTACT UNDERGROUND SERVICE ALERT AT (800) 422-4133 OR 811 OR GOING ONLINE TO INITIATE A DIGALERT TICKET TO LOCATE UNDERGROUND UTILITIES AT LEAST 2 WORKING DAYS BEFORE DIGGING.
6. CONTRACTOR SHALL FIELD VERIFY (POTHOLE) THE LOCATION, DEPTH, MATERIAL, PIPE SIZE, AND CONNECTION OF EXISTING FACILITIES, INCLUDING ANY POTENTIAL UTILITY CONFLICT, PRIOR TO START OF CONSTRUCTION, TIE-IN, AND A SHUTDOWN REQUEST. IF TIE-IN IS TO AN EXISTING AC LINE, CONTRACTOR SHALL REPLACE EXISTING PIPE SECTIONS TO NEAREST JOINT, AS NECESSARY.
7. IN ACCORDANCE WITH CALIFORNIA TITLE 22, ONLY THE DISTRICT'S OPERATORS ARE PERMITTED TO OPERATE ITS WATER SYSTEM; THIS INCLUDES ANY VALVE, FIRE HYDRANT, BLOW-OFF, CORPORATION STOP, AND OTHER WATER FACILITIES. ACCORDINGLY, ALL CONNECTIONS TO THE WATER SYSTEM SHALL BE MADE UNDER THE OBSERVATION OF THE DISTRICT'S OPERATORS AND INSPECTOR.
8. CONTRACTOR SHALL PROVIDE THE DISTRICT WITH ELECTRONIC COPIES OF SUBMITTALS FOR ALL MATERIALS TO BE USED, INCLUDING CUT SHEETS; VALID CERTIFICATE OF INSURANCE; AND A CONSTRUCTION SCHEDULE AND RELATED UPDATES. THE CONTRACTOR SHALL NOT COMMENCE ANY WORK UNTIL THE SUBMITTALS ARE APPROVED BY THE DISTRICT. A COPY OF THE DISTRICT'S APPROVED MATERIALS LIST IS AVAILABLE ONLINE AT HTTPS://WWW.VCPUBLICWORKS.ORG/WSD.
9. CONTRACTOR SHALL ASSUME SOLE AND COMPLETE RESPONSIBILITY FOR JOB SITE CONDITIONS DURING THE CONSTRUCTION, INCLUDING SAFETY OF ALL PERSONS AND PROPERTIES. THIS REQUIREMENT SHALL APPLY CONTINUOUSLY AND NOT BE LIMITED TO NORMAL WORKING HOURS.
10. THE LOCATIONS OF EXISTING STRUCTURES AND SUB-STRUCTURES HAVE BEEN TAKEN FROM RECORDS AVAILABLE AND THEIR APPROXIMATE LOCATIONS ARE SHOWN ON THESE PLANS TO THE EXTENT THE INFORMATION IS KNOWN. IT SHALL BE THE CONTRACTOR'S RESPONSIBILITY TO POTHOLE THEIR EXACT LOCATION PRIOR TO CONSTRUCTION AND PROTECT ALL FACILITIES FROM HARM DURING CONSTRUCTION. THE CONTRACTOR SHALL NOTIFY THE DISTRICT IMMEDIATELY IF ANY FACILITIES BECOME COMPROMISED OR DAMAGED.
11. SEPARATION BETWEEN WATER AND ANY NON-WATER, INCLUDING RECLAIM WATER, LINES SHALL BE PER REQUIREMENTS OF STATE WATER RESOURCES CONTROL BOARD.
12. NO PERMANENT IMPROVEMENTS SUCH AS BUILDINGS, STRUCTURES, WALLS, SIDEWALKS, CURB AND GUTTER, MONUMENTS, FENCES, TREES, SHRUBS, AND THE LIKE SHALL BE PLACED OVER DISTRICT EASEMENT.
13. WATER PIPES SHALL BE POLYVINYL CHLORIDE (PVC) PER AWWA C900 OR C905, DUCTILE IRON (DI) PER AWWA C150, OR APPROVED EQUAL. THE RATED WATER WORKING PRESSURE REQUIRED SHALL BE DETERMINED BY THE DISTRICT.
14. ALLOWABLE DEFLECTION FOR PIPE JOINTS SHALL BE 1/2 OF MANUFACTURER'S RECOMMENDATION. BENDING OF PIPES TO NEGOTIATE CURVES IS NOT ALLOWED. FITTINGS OR COUPLINGS SHALL BE USED TO NEGOTIATE CURVES.
15. LOCATION AND TYPE OF FIRE HYDRANTS SHALL BE AS APPROVED BY VENTURA COUNTY FIRE PROTECTION DISTRICT.
16. FITTINGS SHALL BE CAST OR DUCTILE IRON PER AWWA C110 OR C153, WITH EITHER A FLANGE END OR MECHANICAL JOINT CONNECTION. ALL PIPE FITTING JOINTS SHALL BE RESTRAINED.
17. SPIGOTS SHALL BE PROPERLY BEVELED, CLEANED, AND LUBRICATED PRIOR TO INSTALLATION IN ACCORDANCE WITH AWWA C605 FOR PVC AND AWWA C600 FOR DI PIPE. DO NOT APPLY LUBRICANT TO THE BELL SOCKET OR THE SURFACE OF THE GASKET IN CONTACT WITH THE BELL SOCKET. ONLY APPLY LUBRICANT TO THE EXPOSED SURFACE OF THE GASKET WITHIN THE BELL SOCKET IF RECOMMENDED BY PIPE MANUFACTURER.
18. BOLT THREADS FOR FLANGE JOINTS SHALL BE LUBRICATED WITH ANTI-SEIZE AND TORQUED IN ACCORDANCE WITH MANUFACTURER RECOMMENDATIONS. ALL BURIED BOLTS AND NUTS SHALL BE FULLY COATED WITH SANCHEM NO-OX-ID; APPLIED IN TWO COATS AT A MINIMUM OF 15 MILS PER COAT.
19. ALL PIPE PUP PIECES SHALL HAVE A LENGTH OF AT LEAST 3 TIMES THEIR PIPE DIAMETER BUT SHALL NOT BE SHORTER THAN 3 FEET.
20. WHERE A TEE, ELBOW, OR RELATED FITTING HAS AN ACCOMPANYING VALVE, THE VALVE AND FITTING SHALL BE DIRECTLY MATED TO EACH OTHER USING A FLANGED END CONNECTION; USE OF A MECHANICAL JOINT OR FLANGE ADAPTER WITH PUP PIECE IS NOT PERMITTED. FOR SUCH DIRECTLY BOLTED FLANGE CONNECTION, THE ANCHOR BLOCK FOR THE VALVE MAY BE OMITTED WHEN THE ACCOMPANYING FITTING INCLUDES A THRUST BLOCK.
21. TRACER WIRE SHALL BE ONE CONTINUOUS RUN WHENEVER POSSIBLE. CUT-INS SHALL RE-ESTABLISH WIRE CONTINUITY FOR SPLICES USING WATERPROOF WIRE CONNECTORS FILLED WITH DIELECTRIC SILICONE SEALANT; IDEAL WEATHERPROOF UNDERGROUND WIRE NUT OR APPROVED EQUAL.
22. ALL BACKFLOW PREVENTION ASSEMBLIES SHALL BE LEAD FREE AND LISTED APPROVED BY THE UNIVERSITY OF SOUTHERN CALIFORNIA FOUNDATION FOR CROSS-CONNECTION CONTROL AND HYDRAULIC RESEARCH (USC-FCCCHR). DOUBLE DETECTOR ASSEMBLIES SHALL INCLUDE OUTSIDE STEM AND YOKE VALVING, WITH A TYPE I BYPASS DOUBLE CHECK VALVE AND METER ASSEMBLY.
23. AN AIR GAP OR REDUCED PRESSURE PRINCIPLE BACKFLOW PREVENTION ASSEMBLY SHALL BE INSTALLED ON ANY WATER SERVICE PROVIDING WATER TO, LOCATED WITHIN, OR NEAR AN IDENTIFIED HIGH HAZARD FOR CROSS-CONNECTION CONTROL. HIGH HAZARD FOR CROSS-CONNECTION CONTROL SHALL BE DETERMINED BY THE DISTRICT.
24. ALL STATIONING SHALL BE ALONG THE CENTERLINE OF WATER LINES EXCEPT OTHERWISE NOTED ON THE PLANS.
25. COMPACTION TEST RESULTS SHALL BE SUBMITTED TO THE DISTRICT PRIOR TO PRESSURE TESTING. CONTRACTOR SHALL BEAR COST OF SOILS TESTING.
26. PRESSURE TESTING SHALL BE PERFORMED ONLY AFTER ALL UTILITIES, CURB AND GUTTER ARE INSTALLED, AND BACKFILL IS ACCEPTED. PRESSURE TESTS SHALL BE IN ACCORDANCE WITH SSPWC SECTION 306-8.9.2.
27. DISINFECTION SHALL BE IN ACCORDANCE WITH SSPWC SECTION 306-8.9.4.
28. AFTER CONSTRUCTION, ALL ABOVE GROUND PIPE, VALVES, FITTINGS, AND RELATED APPURTENANCES SHALL BE PRIMED AND COATED. DO NOT COAT THE BOLTS AND NUTS. COLOR SELECTION SHALL BE AS FOLLOWS: DESERT TAN FOR BLOW-OFFS; FOREST GREEN FOR 3" AND LARGER METER ASSEMBLIES, FOREST GREEN FOR REDUCED PRESSURE BACKFLOW ASSEMBLIES, SAFETY YELLOW FOR PUBLIC FIRE HYDRANTS, AND SAFETY RED FOR FIRE SERVICES AND RELATED BACKFLOW ASSEMBLIES.
29. CONTRACTOR SHALL NEATLY MARK-UP A SET OF PROJECT PLANS TO SHOW ALL CORRECTIONS, CLARIFICATIONS AND CHANGES. AS-BUILT DRAWINGS SHALL BE SUBMITTED TO THE DISTRICT IN ELECTRONIC FORMATS PRIOR TO THE ACCEPTANCE OF WORK. THE ENGINEER OF RECORD SHALL PREPARE RECORD DRAWINGS AND SUBMIT HARDCOPIES (BOND PAPER), PDF, AUTOCAD FILES, AND GIS SHAPEFILES GEOREFERENCED TO THE COUNTY DATUM (NAD 1983-CALIFORNIA-V IN ACCORDANCE WITH PUBLIC RESOURCES CODE SECTION 8817).

VENTURA COUNTY FIRE DEPARTMENT GENERAL NOTES

A. THRUST BLOCKS TO BE DESIGNED, LOCATED, AND INSTALLED PER 1995 NFPA 24, AND VENTURA COUNTY FIRE DEPARTMENT REQUIREMENTS.

B. UNDERGROUND SUPPLY PIPING TO BE MINIMUM PVC C900, CLASS 150, OR LINED DUCTILE IRON WITH A MINIMUM BURY OF 36 INCHES.

C. ALL BOLTED JOINT ACCESSORIES SHALL BE CLEANED AND THOROUGHLY COATED WITH ASPHALT OR OTHER CORROSION RETARDING MATERIAL, AND THEN WRAPPED IN PLASTIC AFTER INSTALLATION AND PRIOR TO BACKFILL.

D. UNDERGROUND MAINS AND LEAD-IN CONNECTIONS TO SYSTEM RISERS SHALL BE FLUSHED BEFORE CONNECTION IS MADE TO SPRINKLER, STANDPIPE, OR OTHER FIRE PROTECTION PIPING TO REMOVE FOREIGN MATERIALS. FLUSHING SHALL BE IN THE PRESENCE OF A FIRE PREVENTION REPRESENTATIVE AND IN ACCORDANCE WITH 1995 NFPA 24, SECTION 9.1.

E. ALL NEW PRIVATE FIRE SERVICE MAINS SHALL BE PRESSURIZED TO 200 PSI, OR 50 PSI ABOVE THE MAXIMUM STATIC PRESSURE, WHEN THE MAXIMUM STATIC PRESSURE IS IN EXCESS OF 150 PSI. THE PRESSURE SHALL BE PROVIDED FOR AT LEAST 2 HOURS PRIOR TO THE SCHEDULED INSPECTION TIME.

F. THE TRENCH SHALL BE BACKFILLED BETWEEN JOINTS BEFORE TESTING TO PREVENT MOVEMENT OF PIPE.

G. UNDERGROUND PIPE JOINTS, THRUST BLOCKS, AND OTHER ANCHORS SHALL BE LEFT EXPOSED FOR INSPECTION. TESTS SHALL BE MADE BY THE CONTRACTOR IN THE PRESENCE OF A FIRE PREVENTION REPRESENTATIVE.

H. ALL CONTROL VALVES SHALL BE INDICATING, WITH A TAMPER SWITCH.

I. FIRE DEPARTMENT CONNECTION (FDC):

- SHALL BE ACCESSIBLE AND VISIBLE.
- SHALL BE FACING THE PUBLIC STREET AND SET BACK A MAXIMUM OF 2 FEET FROM THE CURB FACE OR REAR OF THE SIDEWALK, AND AT A HEIGHT OF 2 TO 3 FEET ABOVE THE FINISHED GRADE.
- MAINTAIN A 3 FOOT CLEAR RADIUS AROUND FDC'S.
- WHERE SUBJECT TO MECHANICAL INJURY, PROTECTION SHALL BE PROVIDED.
- SHALL HAVE AN IDENTIFICATION SIGN TO INDICATE BUILDING ADDRESS AND WHAT IT CONTROLS.
- SHALL BE OF ALL BRASS CONSTRUCTION WITH TWO INLETS, EACH WITH A CLAPPER AND PROTECTIVE METAL COVER OR PLUG (NO PLASTIC).
- SHALL BE PAINTED RED.
- SHALL BE WITHIN 150 FEET OF A FIRE HYDRANT.

N:\projects\0075\08 Admin Bldg\engineering\acad\improvements\construction documents\0075_C104_water plan.dwg

SCALE: 1"=10'

0 10 20 30

LINE TABLE		
LINE	LENGTH	DIRECTION
L1	11.64	S32° 14' 03"W
L2	4.22	N57° 45' 57"W
L3	33.64	S32° 14' 03"W

***NOTE:**
VERIFY LOCATION AND ELEVATION OF EXISTING PIPE AND NOTIFY ENGINEER ONE DAY PRIOR TO CONSTRUCTION

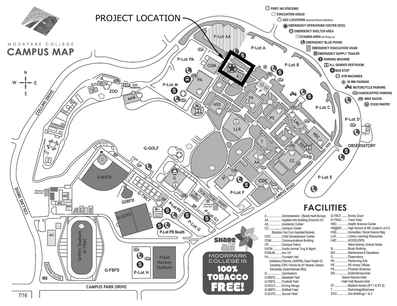

VICINITY MAP

CONSTRUCTION NOTES

1. CONSTRUCT 4" DIAMETER DI CL350 FIRE WATER LINE PER VCWWD TRENCH DETAIL STANDARD PLAN W-1. OUTSIDE SURFACE SHALL BE PROTECTED WITH A POLYETHYLENE ENCASEMENT FURNISHED AND INSTALLED IN ACCORDANCE WITH AWWA C105. SAWCUT EXISTING PAVEMENT AND REPLACE AS NEEDED PER VCWWD TRENCH DETAIL STANDARD PLAN W-1.
2. INSTALL 4" WILKINS 350 DA DOUBLE CHECK DETECTOR ASSEMBLY WITH FDC PER VCWWD STANDARD PLAN W-13, MODIFIED PER DETAIL K HEREON.
3. POINT OF CONNECTION TO EXISTING 8" ACP WATER LINE. INSTALL 8"x8"x4" DI TEE PER VCWWD STANDARD PLAN W-15.
4. CONSTRUCT 4" RESILIENT WEDGE GATE VALVE, WITH VALVE ANCHOR AND VALVE BOX PER VENTURA COUNTY WATERWORKS STANDARD PLATE W-2 AND PLATE W-19.
5. CONNECT TO BUILDING FIRE RISER. SEE BUILDING FIRE SPRINKLER PLANS FOR CONTINUATION.
6. CONTRACTOR TO POTHOLE ALL UTILITY CROSSINGS TO FIELD VERIFY SIZE, DEPTH, AND LOCATION AND SHALL NOTIFY THE ENGINEER OF ANY CONFLICTS WITH PROPOSED UTILITIES.
7. ROMAC WIDE RANGE COUPLING. INSTALLED PER VCWWD STANDARD PLAN W-15
8. INSTALL CONCRETE THRUST BLOCK PER VCWWD STANDARD PLAN W-19.

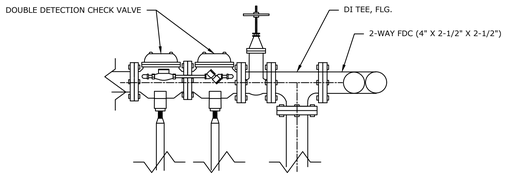

FDC CONNECTION TO DOUBLE DETECTOR CHECK VALVE (K)

N.T.S.

GLEN H. PAGE NO 61468 CIVIL STATE OF CALIFORNIA

RECORD DRAWING

DATE PROJECT COMPLETED _____
REVISIONS SUBMITTED BY _____
DRAWING REVISED BY _____
APPROVED BY _____ DATE _____

D			
C			
B			
A	RECORD DRAWING		
△	REVISION	DESCRIPTION	APP	DATE

ECG Encompass Consultant Group
333 N. LANTANA ST., SUITE 287, CAMARILLO, CA 93010
PHONE: 805.322.4443 WEBSITE: WWW.ECGCIVIL.COM

DIRECTOR,PUBLIC WORKS AGENCY
DIRECTOR, WATER AND SANITATION DEPARTMENT
PROJECT MANAGER, WATER AND SANITATION

DRAWN BY: JDJ
CHECKED BY: GHP

VENTURA COUNTY WATERWORKS DISTRICT NO. 1

SPECIFICATION NO.
PROJ. NO.

MOORPARK COLLEGE ADMINISTRATION BUILDING RENOVATION
FIRE WATER IMPROVEMENTS
7075 CAMPUS ROAD, MOORPARK, CA 93021

SHEET 1 OF 2
DRAWING NO.

DIGALERT
DIAL TOLL FREE
1-800-422-4133
AT LEAST TWO DAYS BEFORE YOU DIG
UNDERGROUND SERVICE ALERT OF SOUTHERN CALIFORNIA

DIVISION OF THE STATE ARCHITECT
IDENTIFICATION STAMP
DIV. OF THE STATE ARCHITECT
APP: 03-123218 INC:
REVIEWED FOR
SS ☑ FLS ☑ ACS ☑
DATE: 07/11/2024

AMADOR WHITTLE ARCHITECTS, INC.
28328 AGOURA ROAD, SUITE 203
AGOURA HILLS, CA 91301
(805) 530-3938 , (818) 874-0071

Ventura County Community College

PROJECT TITLE
ADMINISTRATION BUILDING RENOVATION

7075 CAMPUS ROAD
MOORPARK, CA 91320

CONSULTANT
REGISTERED PROFESSIONAL ENGINEER GLEN H. PAGE NO 61468 CIVIL STATE OF CALIFORNIA
ECG Encompass Consultant Group
333 N. LANTANA ST., SUITE 287, CAMARILLO, CA 93010
PHONE: 805.322.4443 WEBSITE: WWW.ECGCIVIL.COM

STAMPS/SEALS
LICENSED ARCHITECT JEAN ANN AMADOR C-22205 APRIL 30, 2025 STATE OF CALIFORNIA
DATE

△ △ △ △

SHEET TITLE:
WATER PLAN
100% CD

PROJECT NO. 21-MPC-040 | PROJECT ARCH.
DRAWN: JDJ | CHECKED:
SHEET NUMBER:
C104
DATE: 01/02/2024 | SHEET: ___ OF ___

IF THIS SHEET IS NOT 30" X 42", IT IS NOT FULL SIZE, SCALE ACCORDINGLY

DIVISION OF THE STATE ARCHITECT

IDENTIFICATION STAMP
DIV. OF THE STATE ARCHITECT
APP: 03-123218 INC:
REVIEWED FOR
SS ☑ FLS ☑ ACS ☑
DATE: 07/11/2024

AMADOR WHITTLE
ARCHITECTS, INC.
28328 AGOURA ROAD, SUITE 203
AGOURA HILLS, CA 91301
(805) 530-3938 , (818) 874-0071

WATER & SANITATION CONSTRUCTION STANDARDS — DRAWING W-1

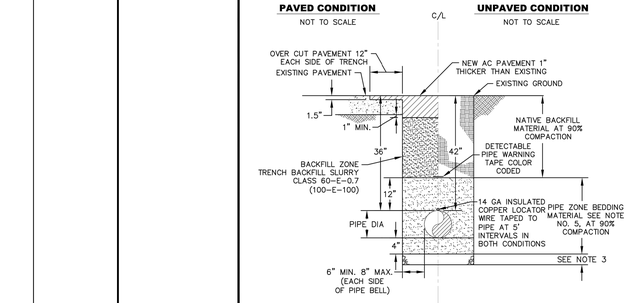

NOTES:

1. MAINTAIN 36" MIN. COVER FOR ALL PIPES IN PAVED AREAS (ON ALL SIDES OF PIPE).
2. MAINTAIN 42" MIN. COVER FOR ALL PIPES IN UNPAVED AREAS (ON ALL SIDES OF PIPE).
3. FOUNDATION SHALL BE REQUIRED IF NATIVE MATERIAL IS SOFT, SPONGY OR UNSTABLE. WHERE OVER EXCAVATION IS REQUIRED, DEPTH AND MATERIAL SHALL BE DETERMINED BY THE DISTRICT.
4. COMPACTION SHALL NOT BE ACHIEVED BY THE USE OF FLOODING, PONDING, OR JETTING UNLESS RECOMMENDED BY SOIL ENGINEER AND APPROVED BY DISTRICT.
5. BEDDING MATERIAL SHALL BE WASHED CONC. SAND, SE > 30, AND GRANULAR WITH 100% PASSING 3/4" SIEVE, 90% TO 100% PASSING THE 3/8" SIEVE AND NOT MORE THAN 5% PASSING THE 200 SIEVE.
6. PIPE SHALL BE ORIENTED WITH PRODUCT LABEL ON TOP.
7. CONTRACTOR SHALL PROVIDE HAND EXCAVATED "BELL HOLE" FOR EACH PIPE JOINT SO THAT THE WEIGHT OF THE PIPE DOES NOT BEAR ON THE BELL. CONTRACTOR SHALL RE-FILL AND HAND-TAMP EACH "BELL HOLE" PRIOR TO COMPLETING THE PLACEMENT OF THE BEDDING.
8. IF EDGE OF ASPHALT TRENCH CAP IS WITHIN 2 FEET OF THE EXISTING EDGE OF PAVEMENT OR LIP OF GUTTER, THE OVERCUT AND PAVING SHALL BE EXTENDED TO THE EDGE OF PAVING OR LIP OF GUTTER.
9. ALL BELOW GRADE PIPE INSTALLATIONS SHALL BE WRAPPED WITH 10 MIL POLYETHYLENE CASING.

ADOPTED BY BOARD OF SUPERVISORS: 02-28-2023

REVISION DATE:	DESCRIPTION:	APPROVED:
		JP PWA DIRECTOR
		RECOMMENDED: JP W&S DIRECTOR

COUNTY OF VENTURA
PUBLIC WORKS AGENCY

TRENCH DETAILS

WATER & SANITATION CONSTRUCTION STANDARDS — DRAWING W-2

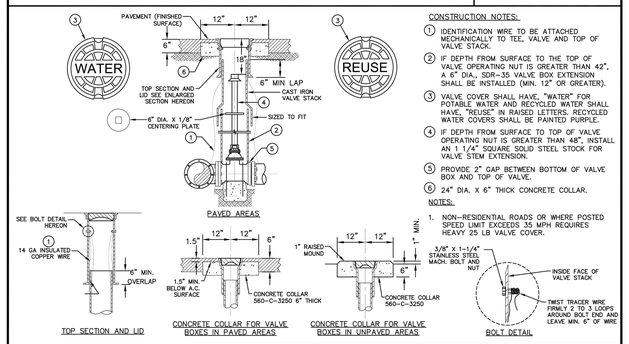

CONSTRUCTION NOTES:

1. IDENTIFICATION WIRE TO BE ATTACHED MECHANICALLY TO TEE, VALVE AND TOP OF VALVE STACK.
2. IF DEPTH FROM SURFACE TO THE TOP OF VALVE OPERATING NUT IS GREATER THAN 42", A 6" DIA., SDR-35 VALVE BOX EXTENSION SHALL BE INSTALLED (MIN. 12" OR GREATER).
3. VALVE COVER SHALL HAVE, "WATER" FOR POTABLE WATER AND RECYCLED WATER SHALL HAVE, "REUSE" IN RAISED LETTERS. RECYCLED WATER COVERS SHALL BE PAINTED PURPLE.
4. IF DEPTH FROM SURFACE TO TOP OF VALVE OPERATING NUT IS GREATER THAN 48", INSTALL AN 1 1/4" SQUARE SOLID STEEL STOCK FOR VALVE STEM EXTENSION.
5. PROVIDE 2" GAP BETWEEN BOTTOM OF VALVE BOX AND TOP OF VALVE.
6. 24" DIA. X 6" THICK CONCRETE COLLAR.

NOTES:

1. NON-RESIDENTIAL ROADS OR WHERE POSTED SPEED LIMIT EXCEEDS 35 MPH REQUIRES HEAVY 25 LB VALVE COVER.

ADOPTED BY BOARD OF SUPERVISORS: 02-28-2023

REVISION DATE:	DESCRIPTION:	APPROVED:
		JP PWA DIRECTOR
		RECOMMENDED: JP W&S DIRECTOR

COUNTY OF VENTURA
PUBLIC WORKS AGENCY

VALVE BOX INSTALLATION

WATER & SANITATION CONSTRUCTION STANDARDS — DRAWING W-13

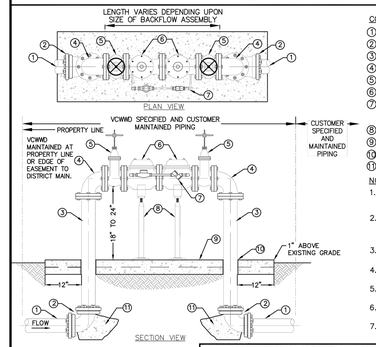

CONSTRUCTION NOTES:

1. DI CL-52 PIPE.
2. DI 90° ELBOW, MJ X MJ WITH RESTRAINTS.
3. DI FLG X PE SPOOL, CUT TO LENGTH.
4. DI 90° ELBOW, FLG X FLG.
5. FLG X FLG RESILIENT WEDGE GATE VALVE, RISING STEM.
6. DOUBLE DETECTOR CHECK VALVE ASSEMBLY.
7. FACTORY INSTALLED BY-PASS ASSEMBLY CONSISTING OF APPROVED POSITIVE DISPLACEMENT METER, DOUBLE CHECK VALVE AND ASSORTED PIPING.
8. ADJUSTABLE PIPE SUPPORT WITH SS ANCHORS.
9. 6" THICK 560-C-3250 CONC. PAD, 12" OUTSIDE ASSEMBLY.
10. EXPANSION JOINT, USE POLYSTYRENE BOND BREAKER.
11. CONCRETE THRUST BLOCK PER DWG NO. W-19.

NOTES:

1. THIS DETAIL IS FOR GENERAL INSTALLATION CONDITIONS ONLY. EACH INDIVIDUAL INSTALLATION SHALL BE APPROVED BY THE DISTRICT PRIOR TO CONSTRUCTION.
2. DDCV ASSEMBLY SHALL BE TESTED BY COUNTY APPROVED TESTER WITHIN 48 HOURS OF SERVICE ACTIVATION. CONTACT COUNTY EHD FOR APPROVED TESTER LIST.
3. DDCV ASSEMBLY SHALL BE INSPECTED AND APPROVED BY THE DISTRICT PRIOR TO ACCEPTANCE.
4. BACKFLOW ASSEMBLY SHALL BE A MINIMUM OF 36" FROM ANY STRUCTURE, CURB, OR SIDEWALK.
5. BRASS PLUGS SHALL BE PLACED IN ALL TEST VALVE OUTLETS.
6. ALL SUB-GRADE INSTALLATIONS SHALL BE WRAPPED IN 10 MIL. POLYETHYLENE WRAP.
7. MULTIPLE BACKFLOW DEVICES IN THE SAME VICINITY SHALL BE THE SAME HEIGHT.

NOTES:

8. ABOVE GROUND PORTION OF ASSEMBLY SHALL BE PAINTED FOREST GREEN.

ADOPTED BY BOARD OF SUPERVISORS: 02-28-2023

REVISION DATE:	DESCRIPTION:	APPROVED:
		JP PWA DIRECTOR
		RECOMMENDED: JP W&S DIRECTOR

COUNTY OF VENTURA
PUBLIC WORKS AGENCY

DOUBLE DETECTOR CHECK VALVE

WATER & SANITATION CONSTRUCTION STANDARDS — DRAWING W-15

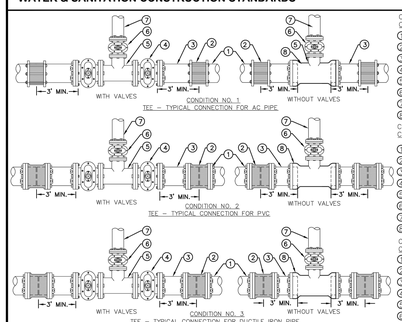

CONDITION # 1 CONSTRUCTION NOTES:

1. EXISTING PIPE.
2. TRANSITION COUPLING (ROMAC OR EQUIVALENT.)
3. 3" SECTION, PVC C-900 DR 14 (NO BEVEL END).
4. MAIN SIZE-IN LINE VALVE, FLG X MJ WITH RESTRAINT.
5. TEE, MAIN SIZE X LATERAL SIZE, FLG X FLG.
6. LATERAL VALVE, FLG X MJ WITH RESTRAINT.
7. LATERAL PIPE.
8. TEE, MAIN SIZE X LATERAL SIZE, MJ X FLG.

CONDITION # 2 CONSTRUCTION NOTES:

1. EXISTING PIPE.
2. SOLID DUCTILE IRON MJ SLEEVE WITH RESTRAINT.
3. 3" SECTION, PVC C-900 DR-14 (NO BEVEL END).
4. MAIN SIZE-IN LINE VALVE, FLG X MJ WITH RESTRAINT.
5. TEE, MAIN SIZE X LATERAL SIZE, FLG X FLG.
6. LATERAL VALVE, FLG X MJ WITH RESTRAINT.
7. LATERAL PIPE.
8. TEE, MAIN SIZE X LATERAL SIZE, MJ X FLG.

CONDITION # 3 CONSTRUCTION NOTES:

1. EXISTING PIPE.
2. SOLID DUCTILE IRON MJ SLEEVE WITH RESTRAINT.
3. 3" SECTION - DUCTILE IRON CLASS 52.
4. MAIN SIZE-IN LINE VALVE, FLG X MJ WITH RESTRAINT.
5. TEE, MAIN SIZE X LATERAL SIZE, FLG X FLG.
6. LATERAL VALVE, FLG X MJ WITH RESTRAINT.
7. LATERAL PIPE.
8. TEE, MAIN SIZE X LATERAL SIZE, MJ X FLG.

NOTES:

1. WATER MAINS IN PUBLIC STREETS SHALL BE LOCATED PARALLEL TO AND 5 FT NORTH OR WEST OF THE CENTER LINE OF THE STREET.
2. WRAP ALL METALLIC APPURTENANCES WITH 10 MIL. POLYETHYLENE ENCASEMENT PER VCWWD CONSTRUCTION STANDARDS.
3. SEE DWG NO. 19 FOR ANCHOR BLOCKS AND THRUST BLOCK DETAILS.
4. SEE DWG NO. 2 FOR VALVE BOX DETAILS.
5. COUPLINGS SHALL BE A MINIMUM OF 36" AWAY FROM ANY SERVICE OR APPURTENANCE.

ADOPTED BY BOARD OF SUPERVISORS: 02-28-2023

REVISION DATE:	DESCRIPTION:	APPROVED:
		JP PWA DIRECTOR
		RECOMMENDED: JP W&S DIRECTOR

COUNTY OF VENTURA
PUBLIC WORKS AGENCY

CUT-IN TEE FOR PVC, AC, AND DI PIPE

WATER & SANITATION CONSTRUCTION STANDARDS — DRAWING W-19

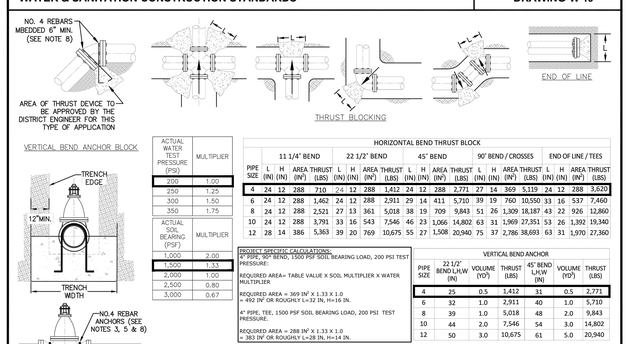

ACTUAL WATER TEST PRESSURE (PSI)	MULTIPLIER
200	1.00
250	1.25
300	1.50
350	1.75

ACTUAL SOIL BEARING (PSF)	MULTIPLIER
1,000	2.00
1,500	1.33
2,000	1.00
2,500	0.80
3,000	0.67

HORIZONTAL BEND THRUST BLOCK

PIPE SIZE	11 1/4" BEND L (IN)	H (IN)	AREA (IN²)	THRUST (LBS)	22 1/2" BEND L (IN)	H (IN)	AREA (IN²)	THRUST (LBS)	45° BEND L (IN)	H (IN)	AREA (IN²)	THRUST (LBS)	90° BEND / CROSSES L (IN)	H (IN)	AREA (IN²)	THRUST (LBS)	END OF LINE / TEES L (IN)	H (IN)	AREA (IN²)	THRUST (LBS)
4	24	12	288	710	24	12	288	1,412	24	12	288	2,771	27	14	369	5,119	24	12	288	3,620
6	24	12	288	1,462	24	12	288	2,911	29	14	411	5,710	39	19	760	10,550	33	16	537	7,460
8	24	12	288	2,521	27	13	361	5,018	38	19	709	9,843	51	26	1,309	18,187	43	22	926	12,860
10	24	12	288	3,791	33	16	543	7,546	46	23	1,066	14,802	63	31	1,969	27,351	53	26	1,392	19,340
12	28	14	386	5,363	39	20	769	10,675	55	27	1,508	20,940	75	37	2,786	38,693	63	31	1,970	27,360

PROJECT SPECIFIC CALCULATIONS:

4" PIPE, 90° BEND, 1500 PSF SOIL BEARING LOAD, 200 PSI TEST PRESSURE:

REQUIRED AREA= TABLE VALUE X SOIL MULTIPLIER X WATER MULTIPLIER

REQUIRED AREA = 369 IN^2 X 1.33 X 1.0
= 492 IN^2 OR ROUGHLY L=32 IN, H=16 IN.

4" PIPE, TEE, 1500 PSF SOIL BEARING LOAD, 200 PSI TEST PRESSURE.

REQUIRED AREA = 288 IN^2 X 1.33 X 1.0
= 383 IN^2 OR ROUGHLY L=28 IN, H=14 IN.

VERTICAL BEND ANCHOR

PIPE SIZE	22 1/2° BEND L,H,W (IN)	VOLUME (YD^3)	THRUST (LBS)	45° BEND L,H,W (IN)	VOLUME (YD^3)	THRUST (LBS)
4	25	0.5	1,412	31	0.5	2,771
6	32	1.0	2,911	40	1.0	5,710
8	39	1.0	5,018	48	2.0	9,843
10	44	2.0	7,546	54	3.0	14,802
12	50	3.0	10,675	61	5.0	20,940

ADOPTED BY BOARD OF SUPERVISORS: 02-28-2023

REVISION DATE:	DESCRIPTION:	APPROVED:
		JP PWA DIRECTOR
		RECOMMENDED: JP W&S DIRECTOR

COUNTY OF VENTURA
PUBLIC WORKS AGENCY

THRUST AND ANCHOR BLOCK DETAILS

SHEET 1 OF 2

WATER & SANITATION CONSTRUCTION STANDARDS — DRAWING W-19

NOTES:

1. THRUST BLOCK BEARING AREA BASED ON SOIL CONSISTING OF SAND AND GRAVEL, CEMENTED WITH CLAY (SAFE BEARING LOAD OF 2000 PSF), MINIMUM 200 PSI WATER PRESSURE, AND 3'-0" COVER MINIMUM.
2. PRIOR TO INSTALLATION, BEARING LOAD OF UNDISTURBED NATIVE SOIL AND WATER TEST PRESSURE MUST BE CONSIDERED.
3. IN NO CASE SHALL THE THRUST BLOCK CONTAIN LESS THAN 3 CUBIC FEET OF CONCRETE.
4. THRUST BLOCK SHALL BEAR SOLIDLY AGAINST FIRM UNDISTURBED EARTH.
5. DO NOT INTERPOLATE BEARING AREA FOR PIPE SIZE OR FITTINGS NOT SHOWN.
6. THE THRUST BLOCK HEIGHT (H) TO LENGTH (L) RATIO SHALL BE MAINTAINED AT MINIMUM 1:2 BUT NOT EXCEED MAXIMUM 1:1.
7. ANCHOR BLOCK IS NOT REQUIRED FOR 6" VALVES OR SMALLER.
8. COAT REBARS WITH APPROVED BITUMASTIC COMPOUND.
9. FOR FLANGED AND MECHANICAL VALVES, KEEP CONCRETE OFF BOLTS.
10. CONCRETE SHALL BE 560-C-3250.
11. RESTRAINT ALL JOINTS FOR SLOPES 30 DEGREES OR STEEPER.
12. DEAD ENDS SHALL HAVE A 3' PUP WITH A RESTRAINED MJ CAP.
13. PROTECT ALL JOINTS FROM POTENTIAL CONCRETE INFILTRATION AND OR ENCASEMENT.

ADOPTED BY BOARD OF SUPERVISORS: 02-28-2023

REVISION DATE:	DESCRIPTION:	APPROVED:
		JP PWA DIRECTOR
		RECOMMENDED: JP W&S DIRECTOR

COUNTY OF VENTURA
PUBLIC WORKS AGENCY

THRUST AND ANCHOR BLOCK DETAILS

SHEET 2 OF 2

RECORD DRAWING
DATE PROJECT COMPLETED _____
REVISIONS SUBMITTED BY _____
DRAWING REVISED BY _____
APPROVED BY _____ DATE _____

REVISION	DESCRIPTION	APP	DATE
D			
C			
B			
A	RECORD DRAWING		
Δ			

ECG Encompass Consultant Group
333 N. LANTANA ST. SUITE 287, CAMARILLO, CA 93010
PHONE: 805.322.4443 WEBSITE: WWW.ECGCIVIL.COM

DIRECTOR,PUBLIC WORKS AGENCY
DIRECTOR, WATER AND SANITATION DEPARTMENT
PROJECT MANAGER, WATER AND SANITATION

DRAWN BY: JDJ
CHECKED BY: GHP

VENTURA COUNTY WATERWORKS DISTRICT NO. 1

SPECIFICATION NO.
PROJ. NO.

MOORPARK COLLEGE ADMINISTRATION BUILDING RENOVATION
FIRE WATER IMPROVEMENTS
7075 CAMPUS ROAD, MOORPARK, CA 93021

SHEET 2 OF 2
DRAWING NO.

DIGALERT
DIAL TOLL FREE
1-800-422-4133
AT LEAST TWO DAYS BEFORE YOU DIG
UNDERGROUND SERVICE ALERT OF SOUTHERN CALIFORNIA

N:\projects\0075\08 Admin Bldg\engineering\acad\improvements\construction documents\0075_C104_water plan.dwg

Ventura County Community College

PROJECT TITLE
ADMINISTRATION BUILDING RENOVATION
7075 CAMPUS ROAD
MOORPARK, CA 91320

CONSULTANT
REGISTERED PROFESSIONAL ENGINEER GLEN H. PAGE NO 61468 CIVIL STATE OF CALIFORNIA
ECG Encompass Consultant Group
333 N. LANTANA ST. SUITE 287, CAMARILLO, CA 93010
PHONE: 805.322.4443 WEBSITE: WWW.ECGCIVIL.COM

STAMPS/SEALS
LICENSED ARCHITECT JEAN ANN AMADOR C-22205 APRIL 30, 2025 DATE STATE OF CALIFORNIA

SHEET TITLE:
WATER DETAILS
100% CD

PROJECT NO. 21-MPC-040 | PROJECT ARCH.
DRAWN: JDJ | CHECKED:
SHEET NUMBER:
C105
DATE: 01/02/2024 | SHEET: ___ OF ___

IF THIS SHEET IS NOT 30" X 42", IT IS NOT FULL SIZE, SCALE ACCORDINGLY

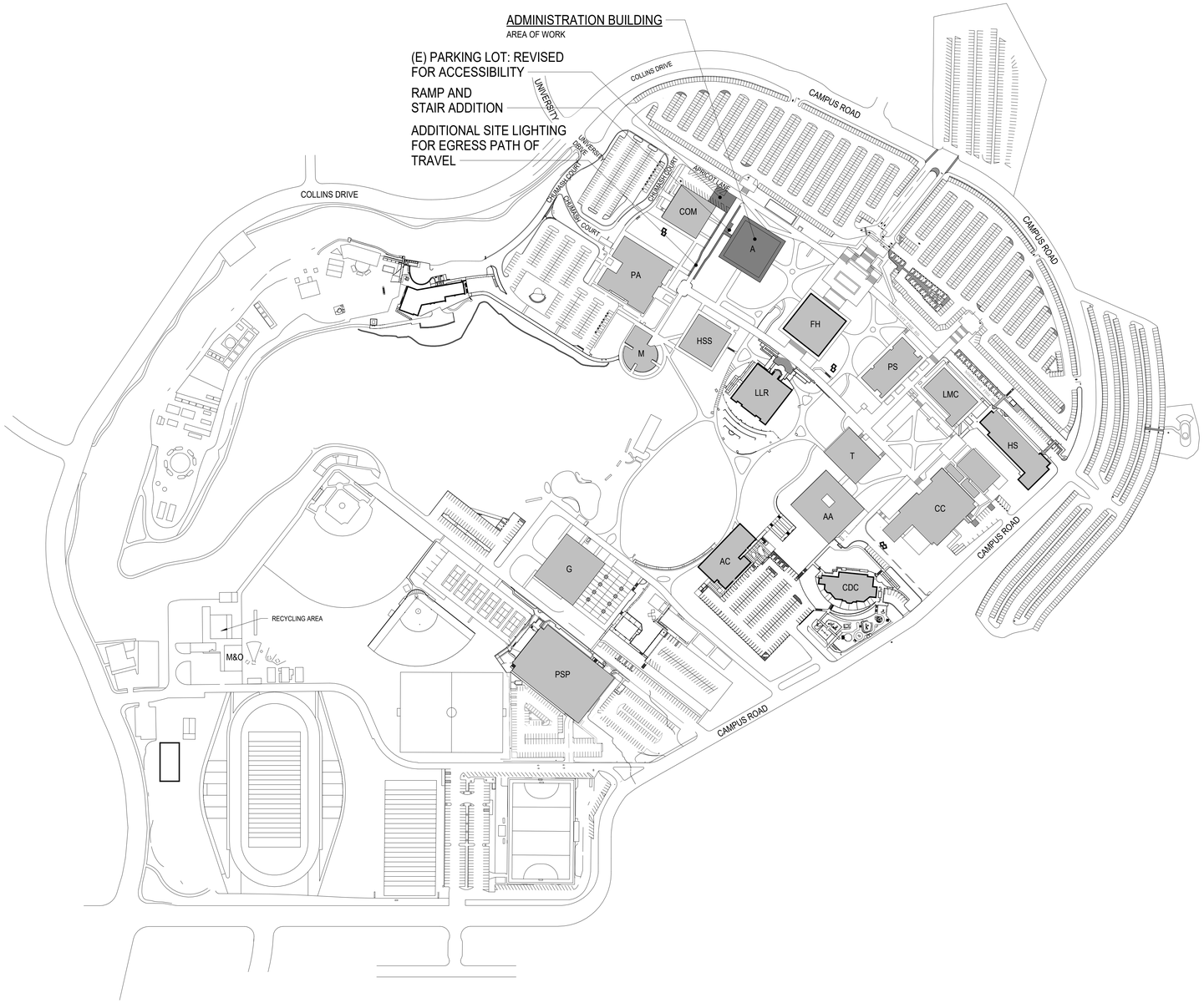

NORTH

BUILDINGS LEGEND

BUILDING	A#	CERTIFICATION DATE
A – ADMINISTRATION	A#27079	01/23/1979
AA – APPLIED ARTS	A#27214	01/20/1969
AC – ACADEMIC CENTER	A#03-110305	01/05/2015
CC – CAMPUS CENTER	A#27214	01/20/1969
CDC – CHILD DEVELOPMENT CENTER	A#03-107539	07/29/2010
COM – COMMUNICATIONS	A#51411	02/09/1995
FH – FOUNTAIN HALL	A#03-108616	07/03/2013
HS – HEALTH SCIENCE	A#03-111305	12/12/2012
HSS – HUMANITIES / SOCIAL SCIENCE	A#35424	02/05/1976
LLR – LIBRARY / LEARNING SOURCES	A#03-104726	11/20/2012
LMC – LIFE / MATH / COMPUTER SCIENCE	A#27214	01/20/1969
M – MUSIC	A#35424	02/05/1976
MO – MAINTENANCE / OPERATIONS	A#27079	01/23/1969
O – OBSERVATORY	A#47124	04/05/1989
PA – PERFORMING ARTS	A#57288	08/08/1999
PS – PHYSICAL SCIENCE	A#27214	01/20/1969
SS – STUDENT SERVICES	A#40577	12/12/1978
T – TECHNOLOGY / BUSINESS	A#31714	06/16/1971
G – GYMNASIUM	A#27349	08/21/1968
Z – ZOO	A#03-111321	05/23/2013
PSP – PARKING STRUCTURE / POLICE STATION	A#03-114024	11/15/2016

LEGEND

- ACCESSIBLE PATH OF TRAVEL- SEE GENERAL NOTE #2
- ACCESSIBLE PATH OF TRAVEL TO SAFE DISPERSAL AREA
- BLDG — EXISTING BUILDINGS - NOT PART OF SCOPE OF WORK
- BLDG — AREA OF WORK
- (N) CONCRETE SIDEWALK
- TRUNCATED DOMES MAT
- PLANTER
- (E)FH — (E) FIRE HYDRANT

CAMPUS SITE PLAN | 1" = 160'-0" | 1

DIVISION OF THE STATE ARCHITECT

IDENTIFICATION STAMP
DIV. OF THE STATE ARCHITECT
APP: 03-123218 INC:
REVIEWED FOR
SS ☑ FLS ☑ ACS ☑
DATE: 07/11/2024

MOORPARK COLLEGE

7075 CAMPUS RD
MOORPARK, CA 93021
TEL: (805) 378 - 1400

PROJECT TITLE AND SCHOOL LOCATION

ADMINISTRATION BUILDING SEISMIC REHABILITATION AND RENOVATION

7075 CAMPUS ROAD
MOORPARK, CA 91320

COMMISSIONED ARCHITECT

AMADOR

amador whittle architects, inc.
28328 AGOURA RD, 203 | AGOURA HILLS CA, 91301 | 805-558-4334

CONSULTANT

STAMPS/SEALS

LICENSED ARCHITECT
JEAN ANN AMADOR
C-22205
APRIL 30, 2025
DATE
STATE OF CALIFORNIA

1/9/24	DSA V2	
8/23/23	DSA V1	

SHEET TITLE:

CAMPUS SITE PLAN

PROJECT NO: 21-MPC-040 | PROJECT ARCH:
DRAWN: GW | CHECKED:
SHEET NUMBER:

A101

DATE: 1/9/24 | SHEET: ___ OF ___

DSA **810**

FIRE & LIFE SAFETY SITE CONDITIONS SUBMITTAL

Division of the State Architect (DSA) documents referenced within this publication are available on the DSA Forms or DSA Publications webpages.

To facilitate the Division of the State Architect's (DSA) fire and life safety plan review of project site conditions, DSA requires the design professional to provide the following information at time of project submittal for projects consisting of construction of a new campus, construction of new building(s), additions to existing buildings, and for site alternate design means for fire department emergency vehicle access, and fire suppression water supply.

Information associated with compliance items 1 through 3 below is to be provided for all project types indicated above. Information associated with items 4 through 7 is to be completed when an alternate means is utilized. Acknowledgement by the school district and signature from the Local Fire Authority (LFA) is only required when an alternate design means is being requested.

The Project Information and Fire & Life Safety Information sections are to be completed for all projects and imaged onto the fire access site plan. When an alternate design/means is proposed, all sections on pages 1 and 2 are to be completed and imaged on the fire access site plan.

For additional information refer to the instructions at the end of this form and DSA Policy *PL 09-01: Fire Flow for Buildings*.

PROJECT INFORMATION	
School District/Owner:	VENTURA COUNTY COMMUNITY COLLEGE DISTRICT
Project Name/School:	ADMINISTRATION BUILDING RENOVATION
Project Address:	7075 CAMPUS ROAD, MOORPARK, CA 93021

FIRE & LIFE SAFETY INFORMATION			
1.	Has a fire hydrant flow test been performed within the past 12 months? *(If yes, provide a copy of the test data.)*	Yes ☑	No ☐
2.	Was the fire hydrant water flow test performed as part of this LFA review?	Yes ☑	No ☐
3.	Is the project located within a designated fire hazard severity zone (FHSZ) as established by Cal-Fire? *(If yes, indicate FHSZ classification below.)*	Yes ☑	No ☐
	Refer to the following website for FHSZ locations: http://egis.fire.ca.gov/FHSZ/	Moderate ☐ High ☐	Very High ☑
	Wildland Interface Area (WIFA) *(If any designations are checked, project design must meet the requirements of CBC Chapter 7A.)*		WIFA ☑

	CONDITION MEANS AND METHODS RESOLUTION	ALTERNATE ACCEPTED Yes	No	N/A	N/R
4.	Emergency vehicle access roadways do not meet CFC requirements.			✔	
4a.	**Acceptable Alternate:** Emergency vehicle and personnel access as proposed by the project architect is acceptable for providing fire suppression and protection of life and property.				
5.	**Fire Hydrants:** Number and spacing does not meet CFC requirements.			✔	
5a.	**Acceptable Alternate:** Number of fire hydrants and spacing as proposed by the project architect is acceptable for fire suppression and protection of life and property.				
6.	**Fire Hydrants:** Water flow and pressure are less than CFC minimum.			✔	
6a.	**Acceptable Alternate:** The available flow and pressure is acceptable for providing fire suppression and protection of life and property.				
7.	Location of fire department connection(s) serving fire sprinkler systems or standpipe systems does not meet CFC requirements.			✔	
7a.	**Acceptable Alternate:** The location of fire department connection serving the fire sprinkler system and/or standpipe system is acceptable for providing fire suppression and protection of life and property.				

School District Acceptance of Acceptable Design Alternates

By signing this form, the school district acknowledges and accepts the proposed design as an alternative to California Building Code (CBC) and California Fire Code (CFC) minimum requirements, as indicated by one or more of the conditions indicated at items 4a, 5a, 6a or 7a, for providing fire and life safety protection of life and property.

Accepted by: _____ Title: _____

Signature: _____ Date: _____

LOCAL FIRE AUTHORITY (LFA) INFORMATION	
LFA Agency Name:	
LFA Review Official:	
Title:	Work Phone:
Work Email:	

LFA Reviewer's Signature: _____ Date: _____

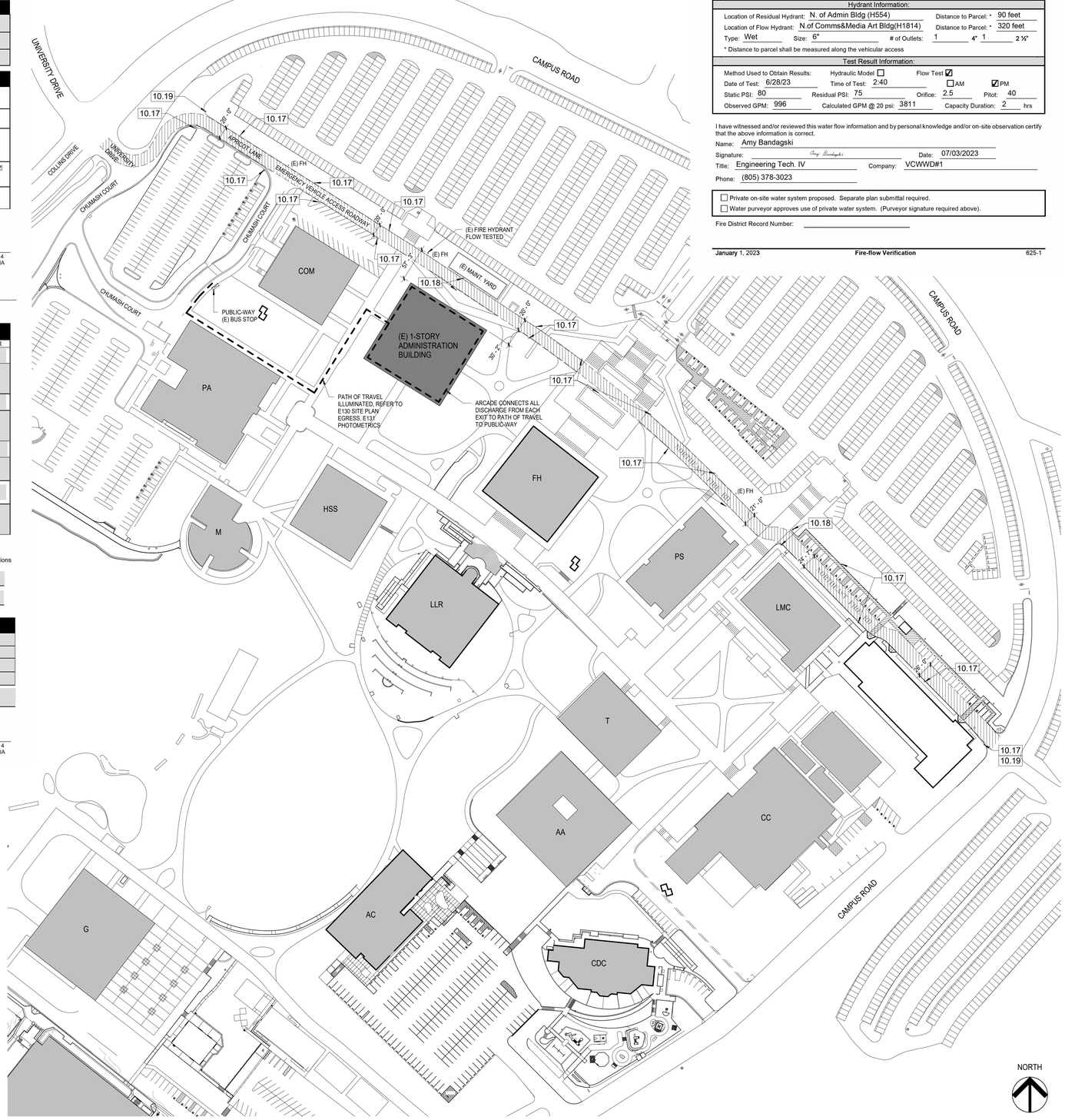

SITE PLAN - LOCAL FIRE AUTHORITY REVIEW | 1" = 80'-0" | 1

VENTURA COUNTY FIRE DEPARTMENT

Fire Prevention Bureau
165 Durley Avenue, Camarillo, CA 93010-8586
Office: (805) 389-9738 Fax: (805) 388-4356

FIRE PREVENTION FORM 625
FIRE-FLOW VERIFICATION

SECTION I – PROJECT INFORMATION
(To Be Completed by Applicant)

Project Name: Moorpark College - Administration Building APN: 500-0-281-495
Project Address: 7075 Campus Road City: Moorpark

SECTION II – INFORMATION ON FIRE-FLOW AVAILABILITY
(To Be Completed by Water Purveyor)

System Information:
Water Purveyor: Ventura County Waterworks District No.1
Size & Location of Main: 8" North of parcel Distance to Parcel: 45 feet
Size of Reservoir Serving Test Hydrants: College Reservoirs 1 and 2 (2.5 MG)

Hydrant Information:
Location of Residual Hydrant: N. of Admin Bldg (H554) Distance to Parcel: * 90 feet
Location of Flow Hydrant: N.of Comms&Media Art Bldg(H1814) Distance to Parcel: * 320 feet
Type: Wet Size: 6" # of Outlets: 1 4" 1 2 ½"
* Distance to parcel shall be measured along the vehicular access

Test Result Information:
Method Used to Obtain Results: Hydraulic Model ☐ Flow Test ☑
Date of Test: 6/28/23 Time of Test: 2:40 ☐AM ☑PM
Static PSI: 80 Residual PSI: 75 Orifice: 2.5 Pitot: 40
Observed GPM: 996 Calculated GPM @ 20 psi: 3811 Capacity Duration: 2 hrs

I have witnessed and/or reviewed this water flow information and by personal knowledge and/or on-site observation certify that the above information is correct.
Name: Amy Bandagski
Signature: Amy Bandagski Date: 07/03/2023
Title: Engineering Tech. IV Company: VCWWD#1
Phone: (805) 378-3023

☐ Private on-site water system proposed. Separate plan submittal required.
☐ Water purveyor approves use of private water system. (Purveyor signature required above).

Fire District Record Number: _____

January 1, 2023 Fire-flow Verification 625-1

FIRE DEPARTMENT NOTES

1. PORTABLE FIRE EXTINGUISHER(S) SHALL BE PROVIDED.
2. MINIMUM 2A 10B:C FIRE EXTINGUISHERS SHALL BE PROVIDED. TRAVEL DISTANCE TO ANY EXTINGUISHER SHALL NOT EXCEED 75 FEET FROM ANY PORTION OF THE BUILDING. EXTINGUISHER(S) SHALL BE HUNG NO HIGHER THAN 44 INCHES MEASURED FROM THE FLOOR TO THE TOP OF THE EXTINGUISHER. SHALL NOT CONTAIN CFC5 OR HALON
3. CFC 503.1; TITLE 19 DIVISION 1 § 3.05 - MAINTAIN FIRE ACCESS ROUTE(S). PUBLIC STREET ACCESS - PROVIDE SIGN(S) 'NO' PARKING FIRE LANE WITH CALIFORNIA VEHICLE CODE 22500.1' AND DETAIL.
4. CFC 506.1 MAINTAIN / PROVIDE KEY BOXES FOR FIRE DEPARTMENT ACCESS, AS APPROPRIATE.
5. CFC 901.4; 907.8.1 INSTALLATION FIRE PROTECTION SYSTEM SHALL BE MAINTAINED IN ACCORDANCE WITH ORIGINAL INSTALLATION STANDARDS FOR THAT SYSTEM. REQUIRED SYSTEM SHALL BE EXTENDED, ALTERED OR AUGMENTED AS NECESSARY TO MAINTAIN AND CONTINUE PROTECTION WHENEVER THE BUILDING IS ALTERED, REMODELED OR ADDED TO.
6. TITLE 19 DIVISION 1 § 1.14 - EVERY FIRE ALARM SYSTEM OR DEVICE, SPRINKLER SYSTEM, FIRE EXTINGUISHER, FIRE HOSE, FIRE-RESISTIVE ASSEMBLY OR ANY OTHER FIRE SAFETY ASSEMBLY, DEVICE MATERIAL OR EQUIPMENT INSTALLED AND RETAINED IN SERVICE IN ANY BUILDING OR STRUCTURE SUBJECT TO CALIFORNIA CODE OF REGULATIONS, TITLE 19 DIVISION 1 REGULATIONS SHALL BE MAINTAINED IN AN OPERABLE CONDITION AT ALL TIMES IN ACCORDANCE WITH CALIFORNIA CODE OF REGULATIONS TITLE 19 DIVISION 1 REGULATIONS AND WITH THEIR INTENDED USE.
7. TITLE 19 DIVISION 1 § 3.24 UPON DISRUPTION OR DIMINISHMENT OF THE FIRE PROTECTIVE QUALITIES OF SUCH EQUIPMENT, MATERIAL OR SYSTEMS IMMEDIATE ACTION SHALL BE INSTITUTED TO EFFECT A REESTABLISHMENT OF SUCH EQUIPMENT MATERIAL OR SYSTEMS TO THEIR ORIGINAL NORMAL OPERATIONAL CONDITION.
8. CFC 901.5.1 IT SHALL BE UNLAWFUL TO OCCUPY ANY PORTION OF A BUILDING OR STRUCTURE UNTIL THE REQUIRED FIRE DETECTION, ALARM AND SUPPRESSION SYSTEMS HAS BEEN TESTED AND APPROVED.
9. FIRE ALARM SCOPE REQUIRES DSA APPROVED DRAWINGS FOR REFERENCE OF AREAS IN SCOPE TO INCLUDE COMPLIANT FIRE ALARM COMPONENTS (SMOKE-HEAT-AUDIBLE-VISUAL-MANUAL). (STATEMENT OF COMPLIANCE PER CFC 901.2.1; 901.6.2.1 & INCORPORATE APPLICABLE SECTIONS PER: 2022 CALIFORNIA REGULATIONS
10. CBC 3301.1 - THE PROVISIONS OF THIS CHAPTER SHALL GOVERN SAFETY DURING CONSTRUCTION AND THE PROTECTION OF ADJACENT PUBLIC PROPERTIES.
11. CBC 3302.3 - FIRE SAFETY DURING CONSTRUCTION SHALL COMPLY WITH THE APPLICABLE REQUIREMENTS OF THIS CODE AND THE APPLICABLE PROVISIONS OF CHAPTER 33 OF CALIFORNIA FIRE CODE.
12. CBC 3309.1 - STRUCTURES UNDER CONSTRUCTION, ALTERATION OR DEMOLITION SHALL BE PROVIDED WITH NO FEWER THAN ONE APPROVED PORTABLE FIRE EXTINGUISHER IN ACCORDANCE WITH SECTION 906 AND SIZED FOR NOT LESS THAN ORDINARY HAZARD AS FOLLOWS: 1. ONE AT EVERY STORAGE AND CONSTRUCTION SHED. 2. ADDITIONAL PORTABLE FIRE EXTINGUISHERS SHALL BE PROVIDED WHERE SPECIAL HAZARDS EXIST, SUCH AS THE STORAGE AND USE FLAMMABLE AND COMBUSTIBLE LIQUIDS.
13. INCORPORATE TESTING NOTE: "COMPLETION OF CONSTRUCTION SHALL INCLUDE RE-ACCEPTANCE TESTING PROVISION FROM NFPA 72 CHAPTER 14 IN ACCORDANCE WITH CFC 907.7; SMOKE DETECTORS SENSITIVITY AS REQUIRED BY CFC 907.8.3; 907.8.4 & SECTION 14.4.4.3"
14. CFC 1031.1 - THE MEANS OF EGRESS FOR BUILDING OR PORTIONS THEREOF SHALL BE MAINTAINED IN ACCORDANCE WITH THIS SECTION.
15. CFC 1031.2 - REQUIRED EXIT ACCESSES, EXITS AND EXIT DISCHARGES SHALL BE CONTINUOUSLY MAINTAIN FREE FROM OBSTRUCTION OR IMPEDIMENTS TO FULL INSTANT USE IN THE CASE OF FIRE OR OTHER EMERGENCY WHERE THE BUILDING AREA SERVED BY THE MEANS OF EGRESS IS OCCUPIED. AN EXIT OR EXIT PASSAGEWAY SHALL NOT BE USED FOR ANY PURPOSE THAT INTERFERES WITH MEANS OF EGRESS.
16. CFC 1031.2.1 - SECURITY DEVICES AFFECTING MEANS OF EGRESS SHALL BE SUBJECT TO APPROVAL OF THE FIRE CODE OFFICAL.
17. CFC 1031.3 - A MEANS OF EGRESS SHALL BE FREE FROM OBSTRUCTIONS THAT WOULD PREVENT ITS USE, INCLUDING THE ACCUMULATION OF SNOW AND ICE
18. CFC 1031.4 - EXIT SIGNS SHALL BE INSTALLED AND MAINTAINED IN ACCORDANCE WITH SECTION 1013. DECORATIONS, FURNISHING, EQUIPMENT OR ADJACENT SIGNAGE THAT IMPAIRS THE VISIBILITY OF EXISTING SIGNS, CREATES CONFUSION OR PREVENTS IDENTIFICATION OF THE EXIT SHALL NOT BE ALLOWED.
19. EMERGENCY VEHICLE ACCESS ROADWAY SHALL BE IDENTIFIED BY RED CURB MARKING AND ROADWAY SURFACE MARKING. RED CURB MARKING: CURB TOP AND SIDE SHALL BE PAINTED RED, AND THE WORDS, "FIRE LANE" IN WHITE, SHALL BE STENCILED ON THE TOP AND SIDE OF ALL RED CURBS AT A MAXIMUM INTERVAL OF 50 FEET. SUCH MARKINGS SHALL BE IN ACCORDANCE WITH LOCAL FIRE DEPARTMENT.

LEGEND

BLDG	EXISTING BUILDINGS - NOT PART OF SCOPE OF WORK
BLDG	AREA OF WORK - NEW BLDG OR ADDITION
	20'-0" WIDE EMERGENCY VEHICLE ACCESS ROADWAY
(E)FH	(E) FIRE HYDRANT

KEYNOTES

10.17	POST MOUNTED FIRE LANE SIGN EVERY 150' ALONG FIRE LANE, SEE 12/A802
10.18	FIRE LANE SIGN ATTACHED TO (E) POST OR LIGHT STANDARD AS OCCURS ALONG FIRE LANE, SEE 12/A802
10.19	POST MOUNTED FIRE LANE SIGN, SEE 11/A802

DIVISION OF THE STATE ARCHITECT

IDENTIFICATION STAMP
DIV. OF THE STATE ARCHITECT
APP: 03-123218 INC:
REVIEWED FOR
SS ☑ FLS ☑ ACS ☑
DATE: 07/11/2024

MOORPARK COLLEGE

7075 CAMPUS RD
MOORPARK, CA 93021
TEL: (805) 378 - 1400

PROJECT TITLE AND SCHOOL LOCATION

ADMINISTRATION BUILDING SEISMIC REHABILITATION AND RENOVATION
7075 CAMPUS ROAD
MOORPARK, CA 91320

COMMISSIONED ARCHITECT

AMADOR

amador whittle architects, inc.
28328 AGOURA RD, 203 | AGOURA HILLS CA. 91301 | 805-558-4334

CONSULTANT

STAMPS/SEALS

LICENSED ARCHITECT
JEAN ANN AMADOR
C-22205
APRIL 30, 2025
DATE
STATE OF CALIFORNIA

1/9/24	DSA V2
8/23/23	DSA V1

SHEET TITLE:

SITE PLAN - LOCAL FIRE AUTHORITY REVIEW

PROJECT NO: 21-MPC-040 PROJECT ARCH:
DRAWN: GW CHECKED:
SHEET NUMBER:
A102
DATE: 1/9/24 SHEET: ___ OF ___

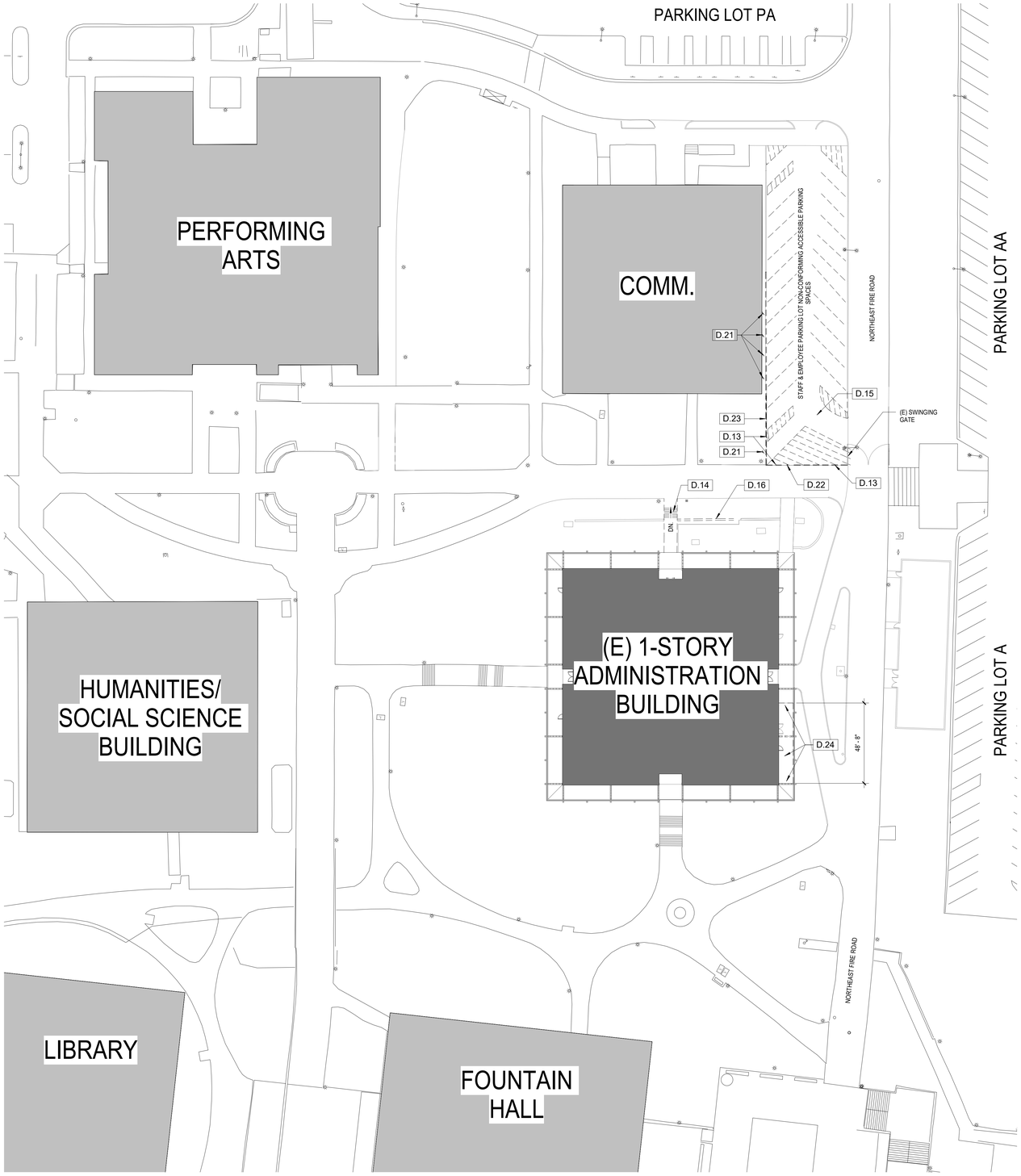

TRUE NORTH
N

DEMOLITION SITE PLAN | 1" = 30'-0" | 1

KEYNOTES

D.13	DEMOLISH (E) STEEL RAILING
D.14	DEMOLISH (E) CONC. STAIR AND HANDRAIL
D.15	DEMOLISH (E) A/C PAVING, SEE CIVIL DWGS.
D.16	DEMOLISH PORTION OF (E) CONC. CURB
D.21	DEMOLISH (E) SIGN
D.22	DEMOLISH (E) STL. RAILING
D.23	DEMOLISH (E) CONC. CURB, SEE CIVIL DWGS.
D.24	DEMOLISH (E) CONC. SLAB, SEE CIVIL DWGS.

DEMOLITION NOTES:

1. ALL EXISTING FURNITURE, FIXTURES AND EQUIPMENT SHALL BE REMOVED AND STORED AS REQUIRED TO ACCOMODATE THE NEW IMPROVEMENTS. COORDINATE REMOVAL WITH THE VCCC PROJECT MANAGER.
2. EXECUTE ALL DEMOLITION REQUIRED FOR COMPLETION OF THE WORK. CONFORM WITH CBC/CFC CHAPTER 33 PROVISIONS.
3. REMOVE OR RELOCATE EXISTING POWER, TELECOM, DATA ETC. AS REQUIRED TO ACCOMODATE THE NEW IMPROVEMENTS - SEE ELECTRICAL DRAWINGS FOR SCOPE OF ELECTRICAL DEMOLITION WORK.
4. SEE MECHANICAL PLANS FOR SCOPE OF MECHANICAL DEMOLITION WORK.
5. REMOVE EXISTING FLOOR AND WALL FINISHES. PATCH AS REQUIRED TO ACCOMMODATE NEW IMPROVEMENTS.
6. REMOVE EXISTING SPRAY APPLIED FIREPROOFING AT ALL BEAMS.
7. CAREFULLY REMOVE EXISTING EXAM ROOM ACCESSORIES (SHARPS DISPENSER, PAPER TOWEL DISPENSERS, ETC.) AND REINSTALL IN NEW EXAM ROOMS.

DEMOLITION LEGEND

- EXISTING CONSTRUCTION
- EXISTING CONSTRUCTION TO BE DEMOLISHED
- EXISTING MORTAR SETTING BED TO BE DEMOLISHED
- EXISTING CONC. CURB TO BE DEMOLISHED
- AREA OF EXISTING 5/8" DEPRESSED SLAB
- EXISTING VINYL ASBESTOS TO BE DEMOLISHED

HAZARDOUS MATERIALS NOTES

1. THIS PROJECT INCLUDES THE REMOVAL AND DISPOSAL OF HAZARDOUS MATERIALS INCLUDING, BUT NOT LIMITED TO, ASBESTOS AND LEAD BASED PAINT. THE CONTRACTOR SHALL REMOVE AND DISPOSE OF HAZARDOUS MATERIALS IN ACCORDANCE WITH ALL APPLICABLE LAWS AND REGULATIONS. A LISTING OF KNOWN HAZARDOUS MATERIALS AS WELL AS A WORK PLAN FOR ITS REMOVAL, PREPARED BY THE OWNER'S SEPARATE CONSULTANT, IS INCLUDED IN THE PROJECT MANUAL.
2. FIREPROOFING: CONTRACTOR IS RESPONSIBLE FOR REPLACING ALL FIREPROOFING REMOVED FROM THE PROJECT AS A HAZARDOUS MATERIAL WITH NEW FIREPROOFING TO ACHIEVE THE REQUIRED HOURLY RATINGS INDICATED IN REMODELED BUILDING CODE ANALYSIS ON SHEET G002.

DIVISION OF THE STATE ARCHITECT

IDENTIFICATION STAMP
DIV. OF THE STATE ARCHITECT
APP: 03-123218 INC:
REVIEWED FOR
SS ☑ FLS ☑ ACS ☑
DATE: 07/11/2024

MOORPARK COLLEGE

7075 CAMPUS RD
MOORPARK, CA 93021
TEL: (805) 378 - 1400

PROJECT TITLE AND SCHOOL LOCATION

ADMINISTRATION BUILDING SEISMIC REHABILITATION AND RENOVATION

7075 CAMPUS ROAD
MOORPARK, CA 91320

COMMISSIONED ARCHITECT

AMADOR

amador whittle architects, inc.
28328 AGOURA RD, 203 | AGOURA HILLS CA. 91301 | 805-558-4334

CONSULTANT

STAMPS/SEALS

LICENSED ARCHITECT
JEFF ANN AMADOR
C-22205
APRIL 30, 2025
DATE
STATE OF CALIFORNIA

1/9/24	DSA V2
8/23/23	DSA V1

SHEET TITLE:

DEMOLITION SITE PLAN

PROJECT NO: 21-MPC-040	PROJECT ARCH:
DRAWN: GW	CHECKED:
SHEET NUMBER: A103	
DATE: 1/9/24	SHEET: ___ OF ___

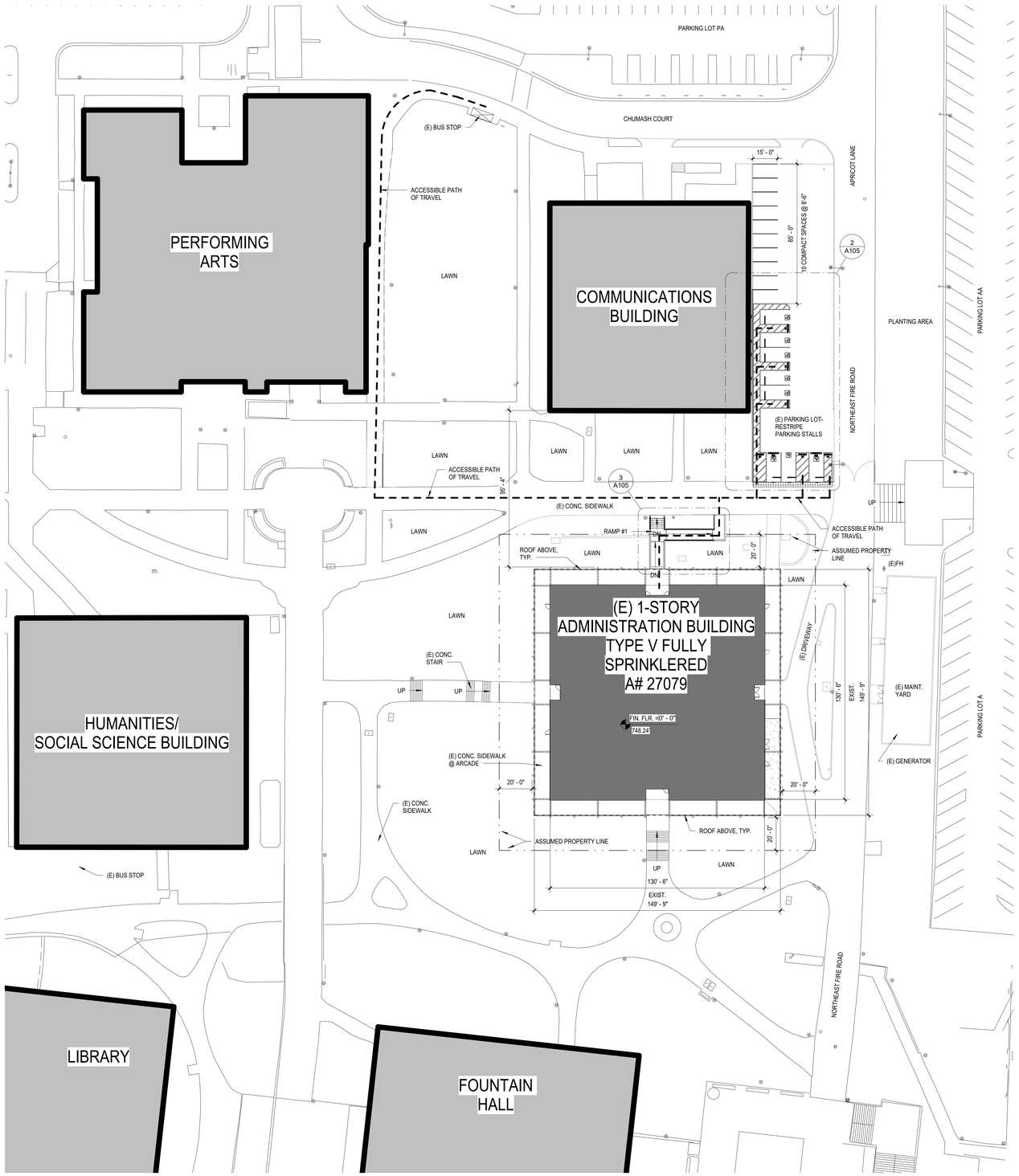

SITE PLAN 1" = 30'-0" 1

SITE PLAN NOTES

1. ALL ITEMS SHOWN ARE NEW UNLESS NOTED AS EXISTING.
2. PATH OF TRAVEL (P.O.T.) AND ACCESSIBLE ROUTE OF TRAVEL AS INDICATED IS A COMMON BARRIER FREE ACCESSIBLE ROUTE WITHOUT ANY ABRUPT VERTICAL CHANGES EXCEEDING 1/2" BEVELED AT 1:2 MAXIMUM SLOPE, EXCEPT THAT LEVEL CHANGES DO NOT EXCEED 1/4" VERTICAL AND IS AT LEAST 48" WIDE. THE SURFACE SHALL BE SLIP RESISTANT, STABLE AND FIRM. PASSING SPACES AT LEAST 60" x 60" SHALL BE LOCATED NOT MORE THAN 200' APART. PARTS OF P.O.T. WITH CONTINUOUS GRADIENTS SHALL HAVE 60" LEVEL AREAS CROSS-SLOPE GREATER THAN 5% RUNNING SLOPE IN THE DIRECTION OF TRAVEL. SLOPES GREATER THAN 5% TO A MAXIMUM OF 8.33% SHALL BE CONSIDERED AS A RAMP (2016 CBC 11B-405.2). THERE SHALL BE NO DROP-OFF OVER 4" ALONG THE EDGE OF WALK OR LANDING. PROVIDE 6" HIGH WARNING CURB IF HIGHER THAN 4". P.O.T. SHALL BE MAINTAINED FREE OF OBJECTS GREATER THAN 4" PROJECTION FROM WALL AND ABOVE 27" AND LESS THAN 80" (11B-307.2). ARCHITECT TO VERIFY THAT ALL BARRIERS IN THE PATH OF TRAVEL HAVE BEEN REMOVED OR WILL BE REMOVED UNDER THIS PROJECT, AND PATH OF TRAVEL COMPLIES WITH CBC 11B-403.
3. DESIGN PROFESSIONAL IN GENERAL RESPOSIBLE CHARGE STATEMENT: THE P.O.T. IDENTIFIED IN THESE CONSTRUCTION DOCUMENTS IS COMPLIANT WITH THE CURRENT APPLICABLE CALIFORNIA BUILDING CODE ACCESSIBILITY PROVISIONS FOR PATH OF TRAVEL REQUIREMENTS FOR ALTERATIONS, ADDITIONS AND STRUCTURAL REPAIRS. AS PART OF THE DESIGN OF THIS PROJECT, THE P.O.T. WAS EXAMINED AND ANY ELEMENTS, COMPONENTS OR PORTIONS OF THE P.O.T. THAT WERE DETERMINED TO BE NONCOMPLIANT 1) HAVE BEEN IDENTIFIED AND 2) THE CORRECTIVE WORK NECESSARY TO BRING THEM INTO COMPLIANCE HAS BEEN INCLUDED WITHIN THE SCOPE OF THIS PROJECT'S WORK THROUGH DETAILS, DRAWINGS AND SPECIFICATIONS INCORPORATED INTO THESE CONSTRUCTION DOCUMENTS. ANY NONCOMPLIANT ELEMENTS, COMPONENTS OR PORTIONS OF P.O.T. THAT WILL NOT BE CORRECTED BY THIS PROJECT BASED ON VALUATION THRESHOLD LIMITATIONS OR FINDING OF UNREASONABLE HARDSHIP ARE SO INDICATED IN THESE CONSTRUCTION DOCUMENTS. DURING CONSTRUCTION, IF P.O.T. ITEMS WITHIN THE SCOPE OF THE PROJECT REPRESENTED AS CODE COMPLIANT ARE FOUND TO BE NONCOMFORMING BEYOND REASONABLE CONSTRUCTION TOLERANCE, THEY SHALL BE BROUGHT INTO COMPLIANCE WITH THE CBC AS A PART OF THIS PROJECT BY MEANS OF CONSTRUCTION CHANGE DOCUMENT.

LEGEND

- ACCESSIBLE PATH OF TRAVEL- SEE GENERAL NOTE #2
- ACCESSIBLE PATH OF TRAVEL TO SAFE DISPERSAL AREA
- BLDG — EXISTING BUILDINGS - NOT PART OF SCOPE OF WORK
- BLDG — AREA OF WORK
- (N) CONCRETE SIDEWALK
- TRUNCATED DOMES MAT
- PLANTER
- (E)FH — (E) FIRE HYDRANT

PARKING CALCS.

TABLE 11B-208.2 (2022 CBC)

EXISTING PARKING LOT ANALYSIS:

TOTAL PARKING SPACES	18
TOTAL ACCESSIBLE REQUIRED	1
TOTAL ACCESSIBLE PROVIDED	8
TOTAL VAN REQUIRED	1
TOTAL VAN PROVIDED	2

DIVISION OF THE STATE ARCHITECT

IDENTIFICATION STAMP
DIV. OF THE STATE ARCHITECT
APP: 03-123218 INC:
REVIEWED FOR
SS ☑ FLS ☑ ACS ☑
DATE: 07/11/2024

MOORPARK COLLEGE

7075 CAMPUS RD
MOORPARK, CA 93021
TEL: (805) 378 - 1400

PROJECT TITLE AND SCHOOL LOCATION

ADMINISTRATION BUILDING SEISMIC REHABILITATION AND RENOVATION

7075 CAMPUS ROAD
MOORPARK, CA 91320

COMMISSIONED ARCHITECT

AMADOR

amador whittle architects, inc.
28328 AGOURA RD, 203 | AGOURA HILLS CA, 91301 | 805-558-4334

CONSULTANT

STAMPS/SEALS

LICENSED ARCHITECT
JEAN ANN AMADOR
C-22205
APRIL 30, 2025
DATE
STATE OF CALIFORNIA

1/9/24	DSA V2	
8/23/23	DSA V1	

SHEET TITLE:

SITE PLAN

PROJECT NO: 21-MPC-040 | PROJECT ARCH:
DRAWN: GW | CHECKED:
SHEET NUMBER:

A104

DATE: 1/9/24 | SHEET: ___ OF ___

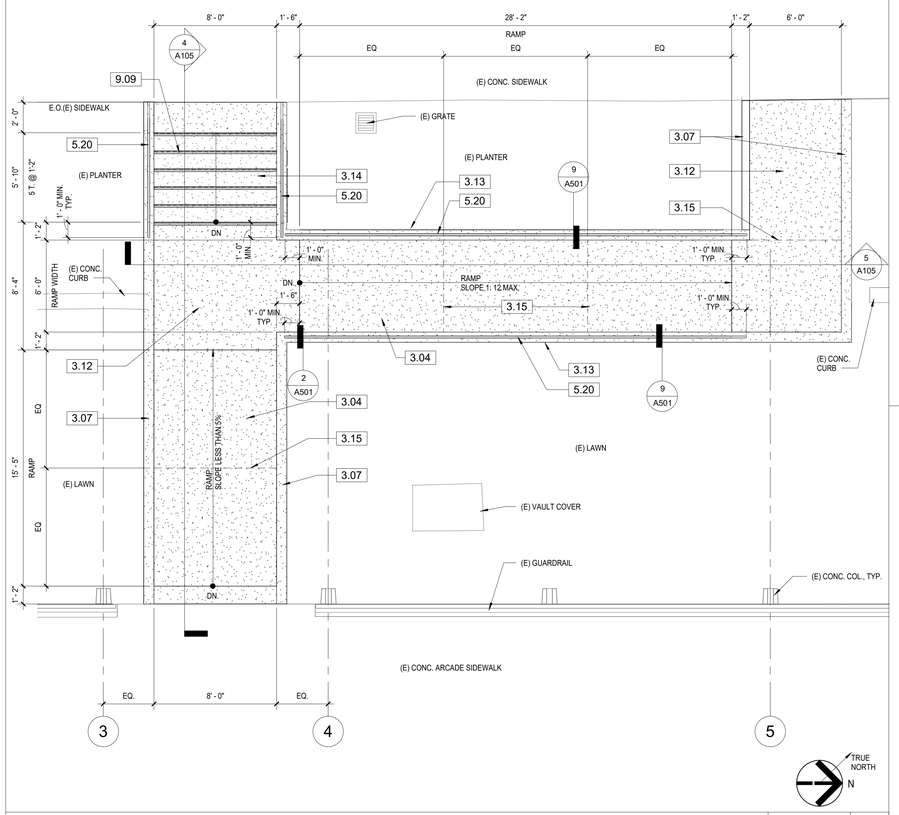

RAMP NO.1 PLAN | 1/4" = 1'-0" | 3

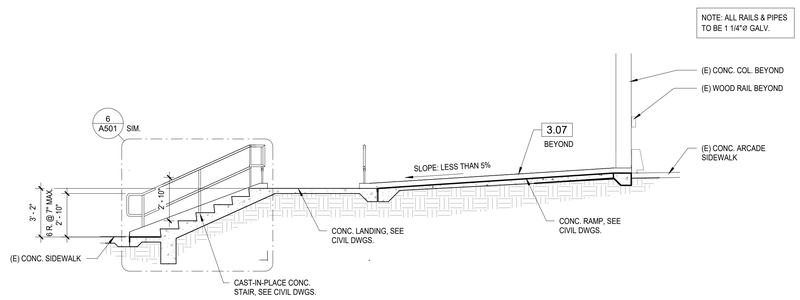

STAIR & RAMP NO. 1 SECTION | 1/4" = 1'-0" | 4

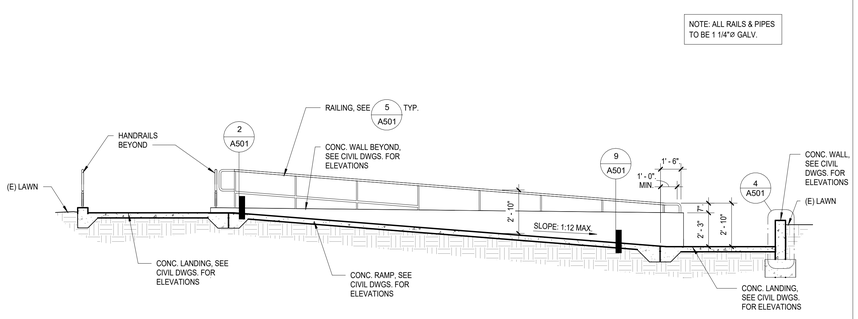

RAMP NO. 1 SECTION | 1/4" = 1'-0" | 5

KEYNOTES

3.04	CONCRETE RAMP, SEE CIVIL DWGS.
3.07	CONCRETE CURB
3.08	CONCRETE WHEEL STOP
3.12	CONCRETE LANDING, SEE CIVIL DWGS. FOR ELEVATIONS
3.13	CONCRETE RETAINING WALL, SEE CIVIL DWGS. FOR ELEVATIONS
3.14	CONCRETE STEPS
3.15	1/8" WIDE x 1" DEEP CONTROL JOINTS IN CONCRETE
5.20	1 1/4" DIA. GALV. PAINTED HANDRAIL
9.09	TOOLED JOINT STRIP PAINTED WITH CONTRASTING COLOR AT EACH TREAD
10.01	ACCESSIBLE NO PARKING SIGN
32.01	ADA COMPLIANT ACCESSIBLE STALL WITH 4" WIDE BLUE STRIPES
32.02	12" HIGH PAINTED TEXT; COLOR: WHITE
32.03	ADA COMPLIANT PAINTED SYMBOL OF ACCESSIBILITY
32.04	3'-0" WIDE TRUNCATED DOME WARNING STRIP, SEE 3/A501

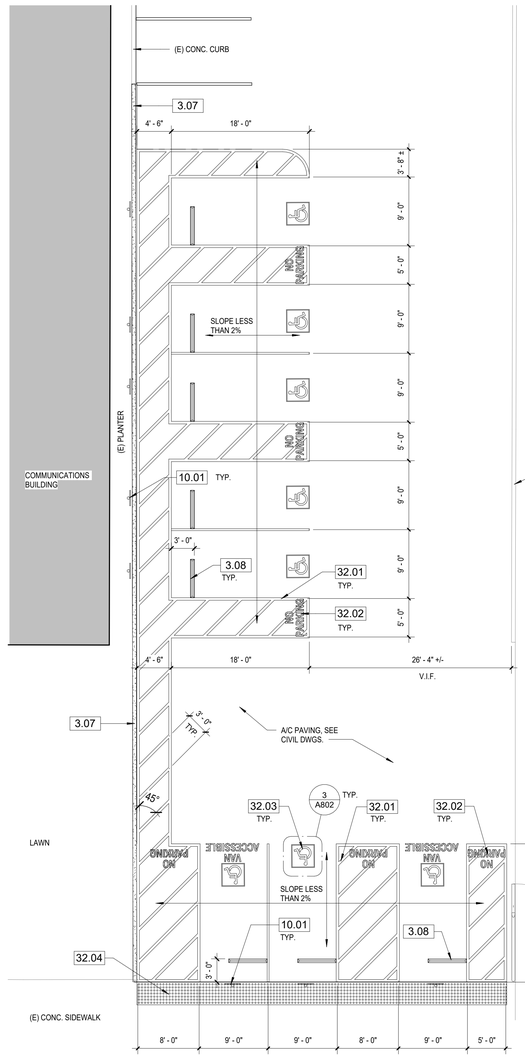

NOTES:
1. ALL DIMENSIONS TO PAINTED STRIPING ARE TAKEN FROM THE CENTERLINE OF STRIPE UNLESS NOTED OTHERWISE
2. STRIPING TO BE 4" WIDE PAINTED BLUE
3. BORDER STRIPING SHALL BE 4" WIDE PAINTED BLUE

PARKING LOT PLAN | 1/8" = 1'-0" | 2

DIVISION OF THE STATE ARCHITECT

IDENTIFICATION STAMP
DIV. OF THE STATE ARCHITECT
APP: 03-123218 INC:
REVIEWED FOR
SS ☑ FLS ☑ ACS ☑
DATE: 07/11/2024

MOORPARK COLLEGE

7075 CAMPUS RD
MOORPARK, CA 93021
TEL: (805) 378 - 1400

PROJECT TITLE AND SCHOOL LOCATION

ADMINISTRATION BUILDING SEISMIC REHABILITATION AND RENOVATION

7075 CAMPUS ROAD
MOORPARK, CA 91320

COMMISSIONED ARCHITECT

AMADOR

amador whittle architects, inc.
28328 AGOURA RD, 203 | AGOURA HILLS CA. 91301 | 805-558-4334

CONSULTANT

STAMPS/SEALS

LICENSED ARCHITECT
JEAN ANN AMADOR
C-22205
APRIL 30, 2025
DATE
STATE OF CALIFORNIA

1/9/24	DSA V2	
8/23/23	DSA V1	

SHEET TITLE:

ENLARGED SITE PLANS & SECTIONS

PROJECT NO: 21-MPC-040
PROJECT ARCH:
DRAWN:
CHECKED:
SHEET NUMBER:

A105

DATE: 1/9/24
SHEET: ___ OF ___

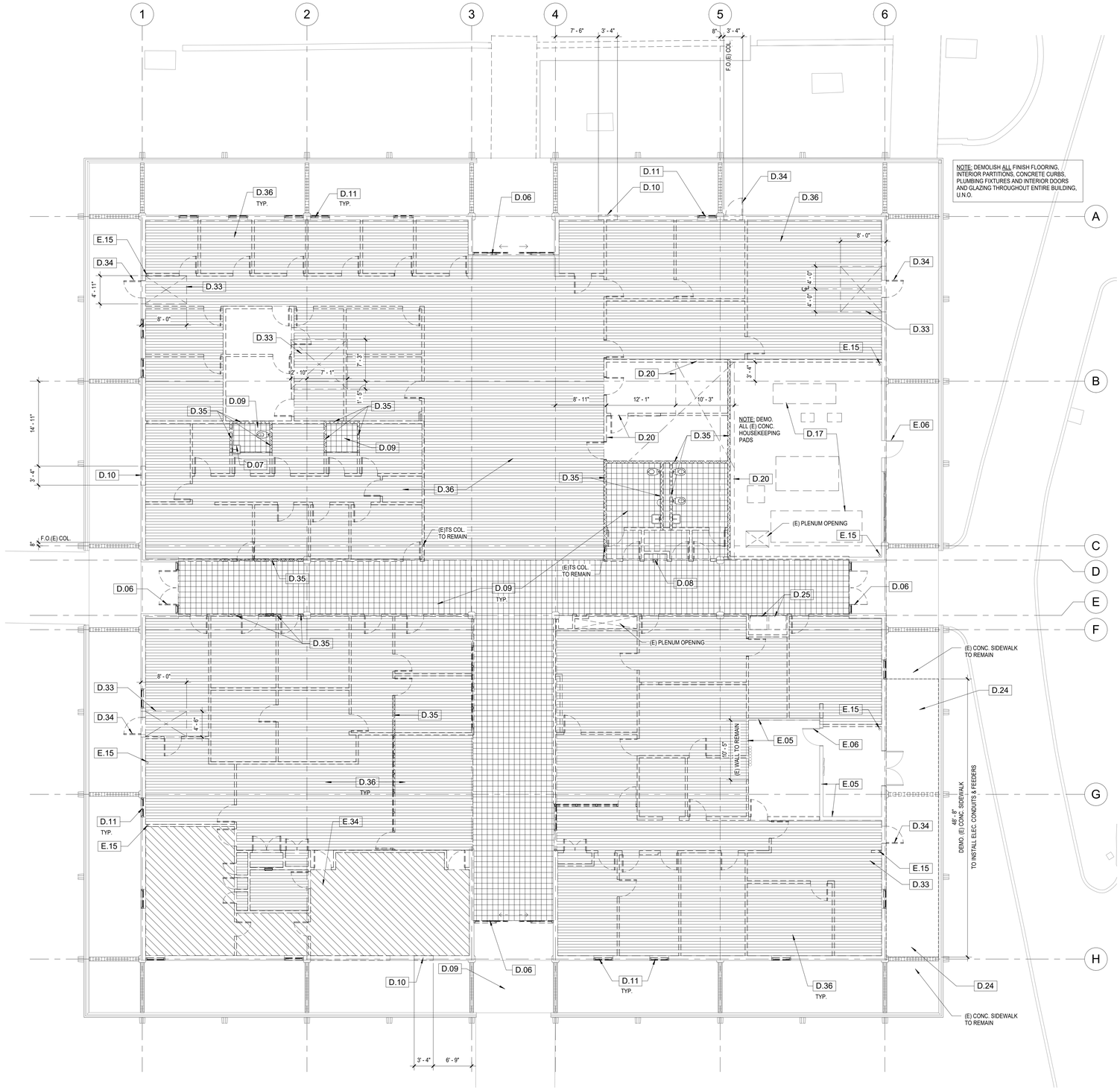

DEMOLITION FLOOR PLAN | 1/8" = 1'-0" | 1

KEYNOTES

D.06	DEMOLISH (E) DOORS AND STOREFRONT
D.07	DEMOLISH (E) PLUMBING FIXTURES, TOILET PARTITIONS AND ACCESSORIES
D.08	DEMOLISH (E) DRINKING FOUNTAIN
D.09	DEMOLISH (E) TILE FLOORING & MORTAR SETTING BED
D.10	DEMOLISH PORTION OF (E) WALL FOR FUTURE WINDOW
D.11	DEMOLISH (E) WINDOW SYSTEM
D.17	DEMOLISH (E) MECH. EQUIP. & HOUSEKEEPING PADS WHERE OCCUR, SEE MECH. DWGS.
D.20	DEMOLISH PORTION OF (E) CONC. SLAB FOR FLOOR DRAIN
D.24	DEMOLISH (E) CONC. SLAB, SEE CIVIL DWGS.
D.25	REMOVE AND RELOCATE (E) VENDING MACHINES
D.33	SAWCUT AND REMOVE PORTION OF EXISTING CONC. SLAB
D.34	DEMOLISH (E) DOOR AND FRAME
D.35	DEMOLISH (E) CONCRETE CURB
D.36	DEMOLISH (E) VINYL ASBESTOS TILE FLOORING
E.05	(E) WALL TO REMAIN
E.06	(E) DOOR TO REMAIN
E.15	(E) DOWNSPOUT; PROTECT IN PLACE
E.34	(E) 5/8" DEPRESSED SLAB

DEMOLITION LEGEND

- EXISTING CONSTRUCTION
- EXISTING CONSTRUCTION TO BE DEMOLISHED
- EXISTING MORTAR SETTING BED TO BE DEMOLISHED
- EXISTING CONC. CURB TO BE DEMOLISHED
- AREA OF EXISTING 5/8" DEPRESSED SLAB
- EXISTING VINYL ASBESTOS TO BE DEMOLISHED

DEMOLITION NOTES:

1. ALL EXISTING FURNITURE, FIXTURES AND EQUIPMENT SHALL BE REMOVED AND STORED AS REQUIRED TO ACCOMODATE THE NEW IMPROVEMENTS. COORDINATE REMOVAL WITH THE VCCC PROJECT MANAGER.
2. EXECUTE ALL DEMOLITION REQUIRED FOR COMPLETION OF THE WORK. CONFORM WITH CBC/CFC CHAPTER 33 PROVISIONS.
3. REMOVE OR RELOCATE EXISTING POWER, TELECOM, DATA ETC. AS REQUIRED TO ACCOMODATE THE NEW IMPROVEMENTS - SEE ELECTRICAL DRAWINGS FOR SCOPE OF ELECTRICAL DEMOLITION WORK.
4. SEE MECHANICAL PLANS FOR SCOPE OF MECHANICAL DEMOLITION WORK.
5. REMOVE EXISTING FLOOR AND WALL FINISHES. PATCH AS REQUIRED TO ACCOMMODATE NEW IMPROVEMENTS.
6. REMOVE EXISTING SPRAY APPLIED FIREPROOFING AT ALL BEAMS.
7. CAREFULLY REMOVE EXISTING EXAM ROOM ACCESSORIES (SHARPS DISPENSER, PAPER TOWEL DISPENSERS, ETC.) AND REINSTALL IN NEW EXAM ROOMS.

HAZARDOUS MATERIALS NOTES

1. THIS PROJECT INCLUDES THE REMOVAL AND DISPOSAL OF HAZARDOUS MATERIALS INCLUDING, BUT NOT LIMITED TO, ASBESTOS AND LEAD BASED PAINT. THE CONTRACTOR SHALL REMOVE AND DISPOSE OF HAZARDOUS MATERIALS IN ACCORDANCE WITH ALL APPLICABLE LAWS AND REGULATIONS. A LISTING OF KNOWN HAZARDOUS MATERIALS AS WELL AS A WORK PLAN FOR ITS REMOVAL, PREPARED BY THE OWNER'S SEPARATE CONSULTANT, IS INCLUDED IN THE PROJECT MANUAL.
2. FIREPROOFING: CONTRACTOR IS RESPONSIBLE FOR REPLACING ALL FIREPROOFING REMOVED FROM THE PROJECT AS A HAZARDOUS MATERIAL WITH NEW FIREPROOFING TO ACHIEVE THE REQUIRED HOURLY RATINGS INDICATED IN REMODELED BUILDING CODE ANALYSIS ON SHEET G002.

DIVISION OF THE STATE ARCHITECT

IDENTIFICATION STAMP
DIV. OF THE STATE ARCHITECT
APP: 03-123218 INC:
REVIEWED FOR
SS ☑ FLS ☑ ACS ☑
DATE: 07/11/2024

MOORPARK COLLEGE

7075 CAMPUS RD
MOORPARK, CA 93021
TEL: (805) 378 - 1400

PROJECT TITLE AND SCHOOL LOCATION

ADMINISTRATION BUILDING SEISMIC REHABILITATION AND RENOVATION
7075 CAMPUS ROAD
MOORPARK, CA 91320

COMMISSIONED ARCHITECT

AMADOR

amador whittle architects, inc.
28328 AGOURA RD, 203 | AGOURA HILLS CA. 91301 | 805-558-4334

CONSULTANT

STAMPS/SEALS

LICENSED ARCHITECT
JEAN ANN AMADOR
C-22205
APRIL 30, 2025
DATE
STATE OF CALIFORNIA

1/9/24	DSA V2
8/23/23	DSA V1

SHEET TITLE:

DEMOLITION FLOOR PLAN

PROJECT NO. 21-MPC-040	PROJECT ARCH:
DRAWN: GW	CHECKED:
SHEET NUMBER: A111	
DATE: 1/9/24	SHEET: ___ OF ___

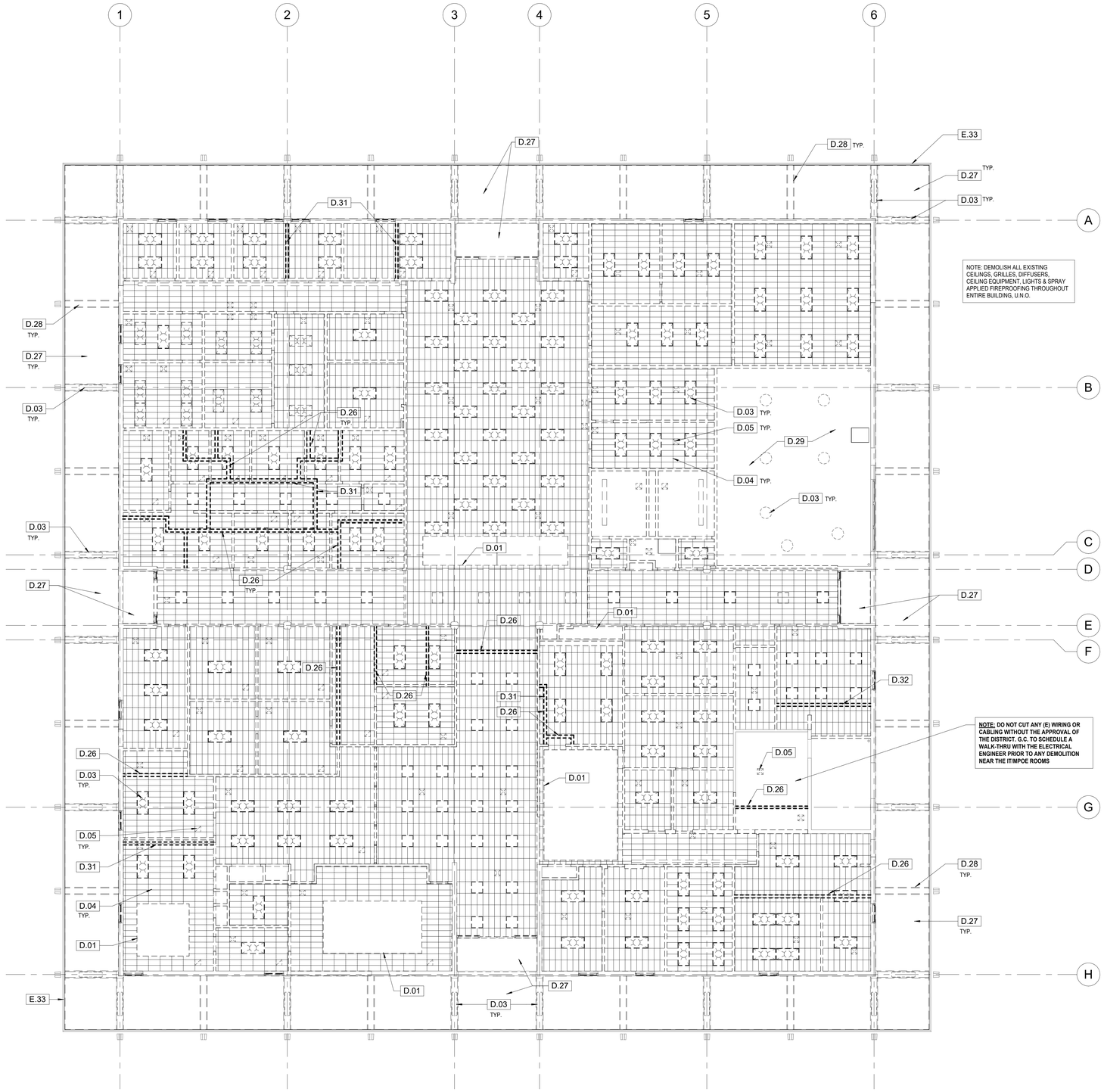

NOTE: DEMOLISH ALL EXISTING CEILINGS, GRILLES, DIFFUSERS, CEILING EQUIPMENT, LIGHTS & SPRAY APPLIED FIREPROOFING THROUGHOUT ENTIRE BUILDING, U.N.O.

NOTE: DO NOT CUT ANY (E) WIRING OR CABLING WITHOUT THE APPROVAL OF THE DISTRICT. G.C. TO SCHEDULE A WALK-THRU WITH THE ELECTRICAL ENGINEER PRIOR TO ANY DEMOLITION NEAR THE IT/MPOE ROOMS

0' 4' 8' 16' 32'

TRUE NORTH

N

DEMOLITION REFLECTED CEILING PLAN | 1/8" = 1'-0" | 1

KEYNOTES

D.01	DEMOLISH (E) GYP. BD. PLENUM
D.03	DEMOLISH (E) LIGHT FIXTURE
D.04	DEMOLISH (E) CEILING
D.05	DEMOLISH (E) MECHANICAL REGISTERS & DUCTS
D.26	DEMOLISH (E) PARTIALLY CUT PARTITIONS ABOVE CEILINGS ATTACHED TO UNDERSIDE OF (E) DECK THROUGHOUT; SEE 5/A504
D.27	DEMOLISH (E) PLASTER SOFFIT AND FRAMING
D.28	DEMOLISH (E) MTL. REVEALS
D.29	DEMOLISH (E) DUCTS THROUGHOUT
D.31	DEMOLISH (E) MTL. STRUTS OR MTL. BRACES WELDED TO (E) STRUCTURE ABOVE CEILING, TYP.
D.32	DEMOLISH (E) WOOD BEAM ABOVE CEILING
E.33	(E) PRE-CAST CONC. FACADE TO REMAIN

DEMOLITION CEILING LEGEND

- EXISTING CONSTRUCTION
- EXISTING CONSTRUCTION TO BE DEMOLISHED
- DEMOLISH EXISTING TILE CEILING THROUGHOUT
- DEMOLISH (E) PARTIALLY CUT PARTITIONS, (E) MTL. BRACES, (E) MTL. & (E) WD. BEAMS ATTACHED TO UNDERSIDE OF (E) DECK OR (E) STRUCTURE ABOVE CEILING, TYICAL THROUGHOUT

DEMOLITION NOTES:

1. ALL EXISTING FURNITURE, FIXTURES AND EQUIPMENT SHALL BE REMOVED AND STORED AS REQUIRED TO ACCOMODATE THE NEW IMPROVEMENTS. COORDINATE REMOVAL WITH THE VCCC PROJECT MANAGER.
2. EXECUTE ALL DEMOLITION REQUIRED FOR COMPLETION OF THE WORK. CONFORM WITH CBC/CFC CHAPTER 33 PROVISIONS.
3. REMOVE OR RELOCATE EXISTING POWER, TELECOM, DATA ETC. AS REQUIRED TO ACCOMODATE THE NEW IMPROVEMENTS - SEE ELECTRICAL DRAWINGS FOR SCOPE OF ELECTRICAL DEMOLITION WORK.
4. SEE MECHANICAL PLANS FOR SCOPE OF MECHANICAL DEMOLITION WORK.
5. REMOVE EXISTING FLOOR AND WALL FINISHES. PATCH AS REQUIRED TO ACCOMMODATE NEW IMPROVEMENTS.
6. REMOVE EXISTING SPRAY APPLIED FIREPROOFING AT ALL BEAMS.
7. CAREFULLY REMOVE EXISTING EXAM ROOM ACCESSORIES (SHARPS DISPENSER, PAPER TOWEL DISPENSERS, ETC.) AND REINSTALL IN NEW EXAM ROOMS.

HAZARDOUS MATERIALS NOTES

1. THIS PROJECT INCLUDES THE REMOVAL AND DISPOSAL OF HAZARDOUS MATERIALS INCLUDING, BUT NOT LIMITED TO, ASBESTOS AND LEAD BASED PAINT. THE CONTRACTOR SHALL REMOVE AND DISPOSE OF HAZARDOUS MATERIALS IN ACCORDANCE WITH ALL APPLICABLE LAWS AND REGULATIONS. A LISTING OF KNOWN HAZARDOUS MATERIALS AS WELL AS A WORK PLAN FOR ITS REMOVAL, PREPARED BY THE OWNER'S SEPARATE CONSULTANT, IS INCLUDED IN THE PROJECT MANUAL.
2. FIREPROOFING: CONTRACTOR IS RESPONSIBLE FOR REPLACING ALL FIREPROOFING REMOVED FROM THE PROJECT AS A HAZARDOUS MATERIAL WITH NEW FIREPROOFING TO ACHIEVE THE REQUIRED HOURLY RATINGS INDICATED IN REMODELED BUILDING CODE ANALYSIS ON SHEET G002.

DIVISION OF THE STATE ARCHITECT

IDENTIFICATION STAMP
DIV. OF THE STATE ARCHITECT
APP: 03-123218 INC:
REVIEWED FOR
SS ☑ FLS ☑ ACS ☑
DATE: 07/11/2024

MOORPARK COLLEGE

7075 CAMPUS RD
MOORPARK, CA 93021
TEL: (805) 378 - 1400

PROJECT TITLE AND SCHOOL LOCATION

ADMINISTRATION BUILDING SEISMIC REHABILITATION AND RENOVATION

7075 CAMPUS ROAD
MOORPARK, CA 91320

COMMISSIONED ARCHITECT

AMADOR

amador whittle architects, inc.
28328 AGOURA RD, 203 | AGOURA HILLS CA. 91301 | 805-558-4334

CONSULTANT

STAMPS/SEALS

LICENSED ARCHITECT
JEAN ANN AMADOR
C-22205
APRIL 30, 2025
DATE
STATE OF CALIFORNIA

1/9/24	DSA V2
8/23/23	DSA V1

SHEET TITLE:

DEMO. REFLECTED CEILING PLAN

PROJECT NO: 21-MPC-040	PROJECT ARCH:
DRAWN: GW	CHECKED:
SHEET NUMBER: A112	
DATE: 1/9/24	SHEET: ___ OF ___

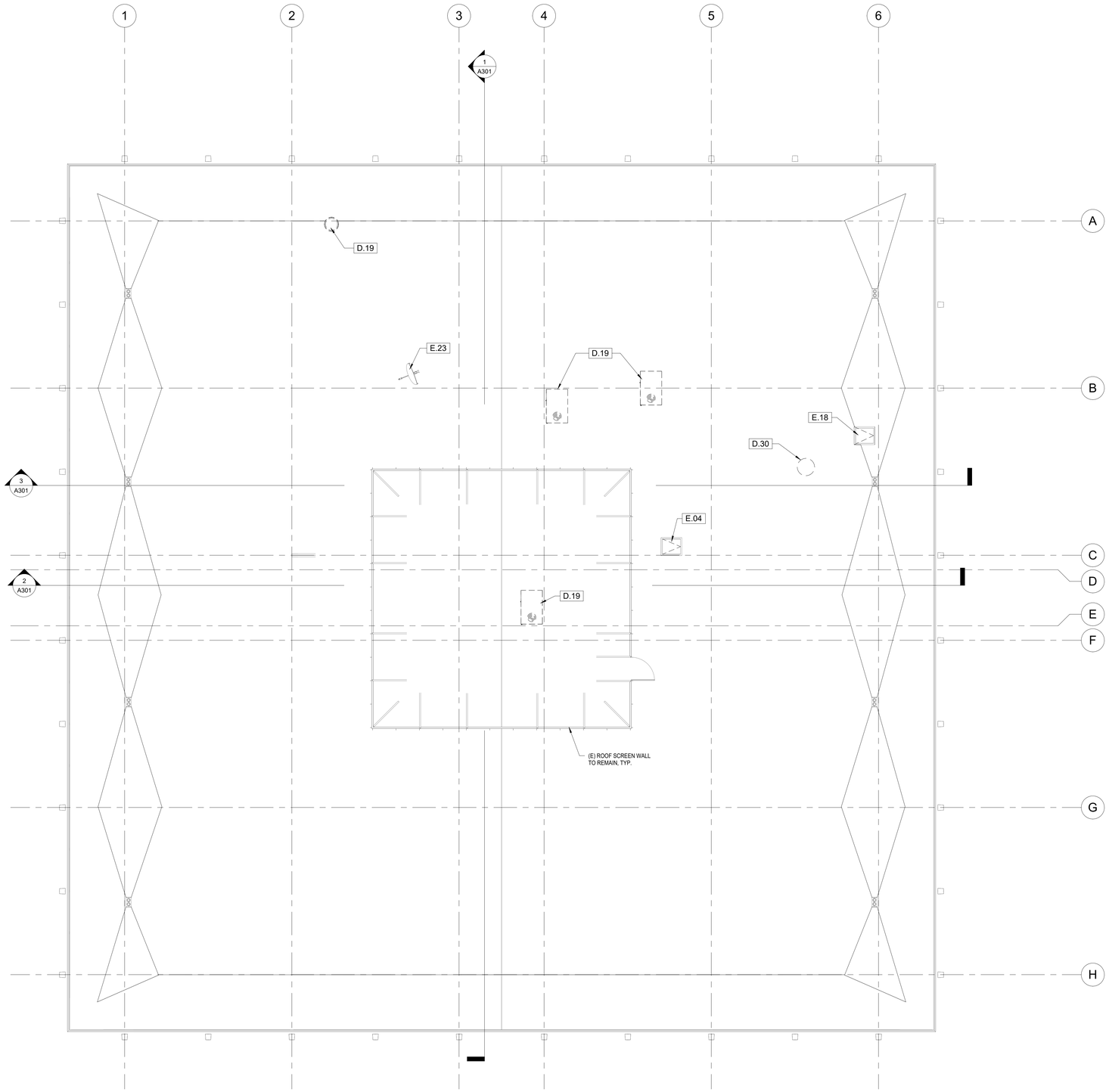

TRUE NORTH
N

DEMOLITION ROOF PLAN | 1/8" = 1'-0" | 1

KEYNOTES

D.19	DEMOLISH (E) MECH. UNIT, SEE MECH. DWGS.
D.30	DEMOLISH (E) FLUE, TYP.
E.04	(E) ROOF HATCH TO REMAIN
E.18	ABANDON (E) ROOF HATCH- SEAL SHUT
E.23	(E) SATELLITE DISH

DEMOLITION LEGEND

EXISTING CONSTRUCTION

EXISTING CONSTRUCTION TO BE DEMOLISHED

DEMOLITION NOTES:

1. ALL EXISTING FURNITURE, FIXTURES AND EQUIPMENT SHALL BE REMOVED AND STORED AS REQUIRED TO ACCOMODATE THE NEW IMPROVEMENTS. COORDINATE REMOVAL WITH THE VCCC PROJECT MANAGER.
2. EXECUTE ALL DEMOLITION REQUIRED FOR COMPLETION OF THE WORK. CONFORM WITH CBC/CFC CHAPTER 33 PROVISIONS.
3. REMOVE OR RELOCATE EXISTING POWER, TELECOM, DATA ETC. AS REQUIRED TO ACCOMODATE THE NEW IMPROVEMENTS - SEE ELECTRICAL DRAWINGS FOR SCOPE OF ELECTRICAL DEMOLITION WORK.
4. SEE MECHANICAL PLANS FOR SCOPE OF MECHANICAL DEMOLITION WORK.
5. REMOVE EXISTING FLOOR AND WALL FINISHES. PATCH AS REQUIRED TO ACCOMMODATE NEW IMPROVEMENTS.
6. REMOVE EXISTING SPRAY APPLIED FIREPROOFING AT ALL BEAMS.
7. CAREFULLY REMOVE EXISTING EXAM ROOM ACCESSORIES (SHARPS DISPENSER, PAPER TOWEL DISPENSERS, ETC.) AND REINSTALL IN NEW EXAM ROOMS.

HAZARDOUS MATERIALS NOTES

1. THIS PROJECT INCLUDES THE REMOVAL AND DISPOSAL OF HAZARDOUS MATERIALS INCLUDING, BUT NOT LIMITED TO, ASBESTOS AND LEAD BASED PAINT. THE CONTRACTOR SHALL REMOVE AND DISPOSE OF HAZARDOUS MATERIALS IN ACCORDANCE WITH ALL APPLICABLE LAWS AND REGULATIONS. A LISTING OF KNOWN HAZARDOUS MATERIALS AS WELL AS A WORK PLAN FOR ITS REMOVAL, PREPARED BY THE OWNER'S SEPARATE CONSULTANT, IS INCLUDED IN THE PROJECT MANUAL.
2. FIREPROOFING: CONTRACTOR IS RESPONSIBLE FOR REPLACING ALL FIREPROOFING REMOVED FROM THE PROJECT AS A HAZARDOUS MATERIAL WITH NEW FIREPROOFING TO ACHIEVE THE REQUIRED HOURLY RATINGS INDICATED IN REMODELED BUILDING CODE ANALYSIS ON SHEET G002.

DIVISION OF THE STATE ARCHITECT

IDENTIFICATION STAMP
DIV. OF THE STATE ARCHITECT
APP: 03-123218 INC:
REVIEWED FOR
SS ☑ FLS ☑ ACS ☑
DATE: 07/11/2024

MOORPARK COLLEGE

7075 CAMPUS RD
MOORPARK, CA 93021
TEL: (805) 378 - 1400

PROJECT TITLE AND SCHOOL LOCATION

ADMINISTRATION BUILDING SEISMIC REHABILITATION AND RENOVATION

7075 CAMPUS ROAD
MOORPARK, CA 91320

COMMISSIONED ARCHITECT

AMADOR

amador whittle architects, inc.
28328 AGOURA RD, 203 | AGOURA HILLS CA, 91301 | 805-558-4334

CONSULTANT

STAMPS/SEALS

LICENSED ARCHITECT
JEAN ANN AMADOR
C-22205
APRIL 30, 2025
DATE
STATE OF CALIFORNIA

1/9/24	DSA V2
8/23/23	DSA V1

SHEET TITLE:

DEMOLITION ROOF PLAN

PROJECT NO. 21-MPC-040 | PROJECT ARCH:
DRAWN: GW | CHECKED:
SHEET NUMBER:

A113

DATE: 1/9/24 | SHEET: ___ OF ___

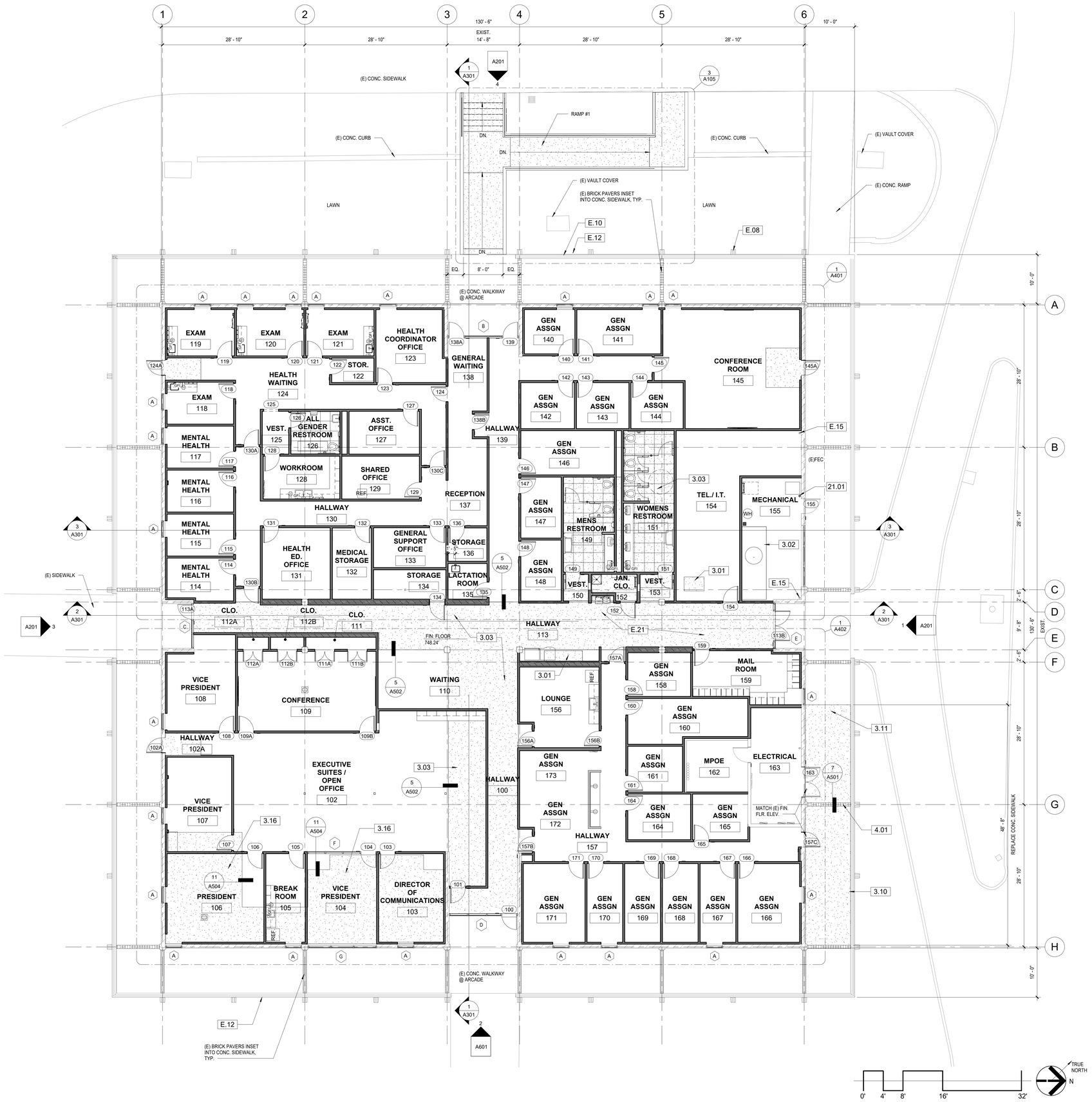

OVERALL FLOOR PLAN | 1/8" = 1'-0" | 1

KEYNOTES

3.01	PROVIDE CONC. ON FOAM TO COVER (E) FLOOR OPENING, SEE 9/S300
3.02	CONCRETE HOUSEKEEPING PAD, SEE MECH. DWGS.
3.03	2 1/2" THICK CONCRETE TOPPING INFILL
3.10	CONSTRUCT CONC. GUTTER TO MATCH EXISTING ALONG PERIMETER OF SIDEWALK
3.11	CONSTRUCT CONC. SIDEWALK TO MATCH EXIST., SEE STRUCT. DWGS.
3.16	5/8" THICK CONCRETE TOPPING INFILL
4.01	BRICK INSET PAVERS TO MATCH EXISTING
21.01	FIRE SPRINKLER RISER, SEE FIRE SPRINKLER DWGS.
E.08	(E) CONCRETE COLUMN
E.10	(E) WOOD RAIL, REFINISH AND PAINT
E.12	(E) CONCRETE WALL
E.15	(E) DOWNSPOUT; PROTECT IN PLACE
E.21	(E) PLENUM BELOW TO BE ABANDONED

LEGEND

- EXISTING PARTITION
- MASONRY WALL
- STUD PARTITION
- LOW PARTITION
- CONCRETE TOPPING INFILL, SEE 5/A502 U.N.O.
- PARTITION TYPE, SEE SHEET A502
- CG WALL CORNER GUARD, SEE 3/A502
- CERAMIC TILE ON MORTAR SETTING BED ON 2" DEPRESSED SLAB

NOTES:

1. MINIMUM MANUEVERING CLEARANCES AT DOORS SHALL BE LEVEL AND CLEAR. THE LEVEL AREA SHALL HAVE A LENGTH IN THE DIRECTION OF THE DOOR SWING OF AT LEAST 60 INCHES AND THE LENGTH OPPOSITE THE DIRECTION OF DOOR SWING OF 48 INCHES AS MEASURED AT RIGHT ANGLES TO THE PLANE OF THE DOOR IN ITS CLOSED POSITION. CBC 11B-404.2.4.
2. DOOR JAMBS AT CORNERS OF ROOMS SHALL BE 4" MIN. FROM WALL INSIDE CORNER U.N.O.
3. ALL DIMENSIONS ARE TAKEN FROM FACE OF EXISTING CONSTRUCTION OR FACE OF STUD FOR NEW CONSTRUCTION, UNLESS NOTED OTHERWISE.
4. DEPRESS CONCRETE SLABS IN RESTROOMS 2"

DIVISION OF THE STATE ARCHITECT

IDENTIFICATION STAMP
DIV. OF THE STATE ARCHITECT
APP: 03-123218 INC:
REVIEWED FOR
SS ☑ FLS ☑ ACS ☑
DATE: 07/11/2024

MOORPARK COLLEGE

7075 CAMPUS RD
MOORPARK, CA 93021
TEL: (805) 378 - 1400

PROJECT TITLE AND SCHOOL LOCATION

ADMINISTRATION BUILDING SEISMIC REHABILITATION AND RENOVATION

7075 CAMPUS ROAD
MOORPARK, CA 91320

COMMISSIONED ARCHITECT

AMADOR

amador whittle architects, inc.
28328 AGOURA RD, 203 | AGOURA HILLS CA, 91301 | 805-558-4334

CONSULTANT

STAMPS/SEALS

LICENSED ARCHITECT
JEAN ANN AMADOR
C-22205
APRIL 30, 2025
DATE
STATE OF CALIFORNIA

1/9/24	DSA V2	
8/23/23	DSA V1	

SHEET TITLE:

OVERALL FLOOR PLAN

PROJECT NO: 21-MPC-040 | PROJECT ARCH:
DRAWN: GW | CHECKED:
SHEET NUMBER:

A114

DATE: 1/9/24 | SHEET: ___ OF ___

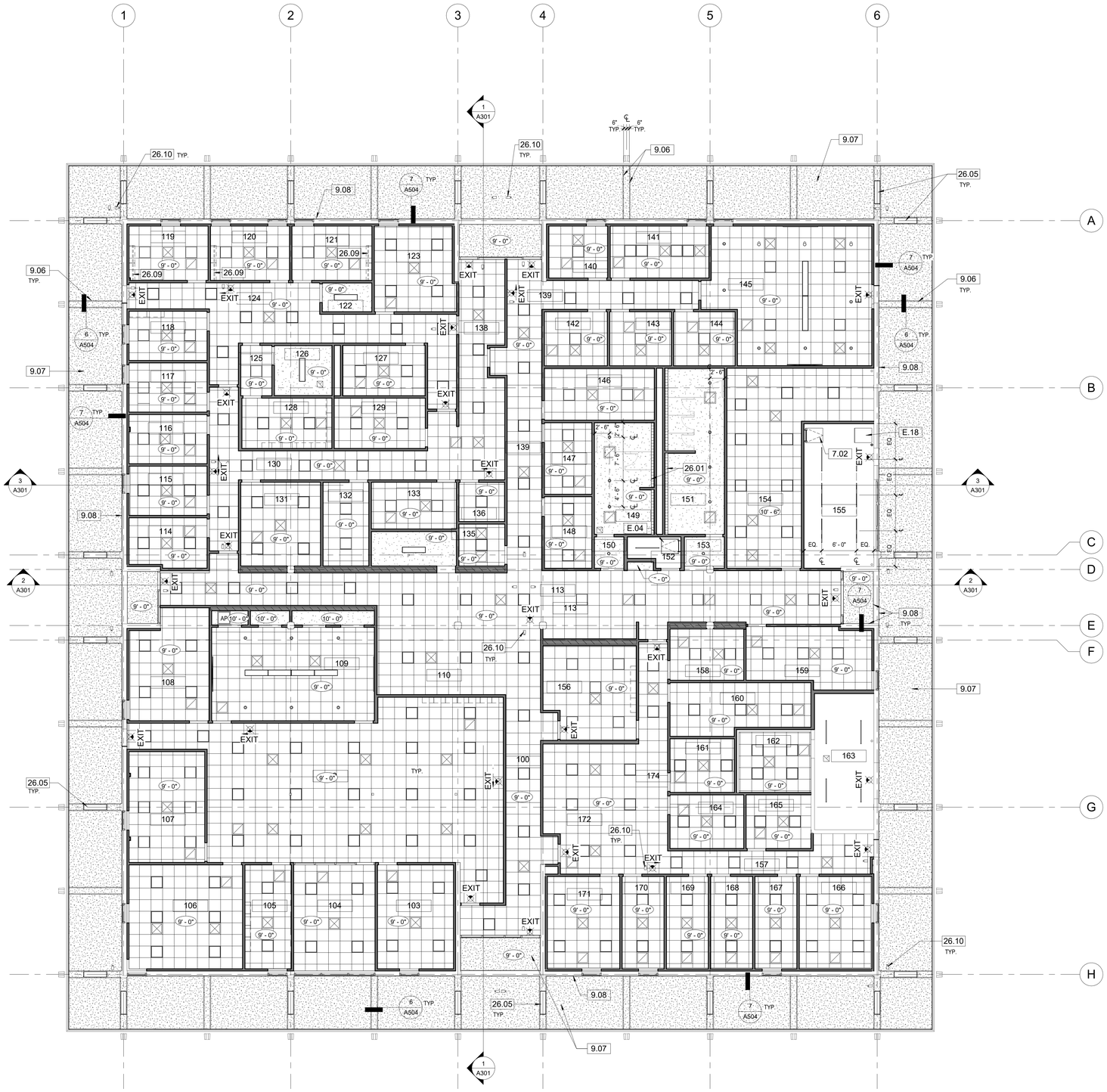

REFLECTED CEILING PLAN | 1/8" = 1'-0" | 1

KEYNOTES

7.02	30" x 36" ROOF ACCESS HATCH
9.06	1 1/2" ALUM. REVEAL- SAME LOCATION AS DEMOLISHED REVEALS
9.07	EXTERIOR CEMENT PLASTER ON MTL. LATH & PAPER BACKING SOFFIT
9.08	3/4" VENTED REVEAL AT WALL, TYP. ENTIRE PERIMETER
26.01	RECESSED COVE LIGHTING, SEE ELEC. DWGS.
26.05	LIGHT FIXTURE, SEE ELEC. DWGS.
26.09	UNDER CABINET STRIP LIGHT FIXTURE, SEE ELEC. DWGS.
26.10	CEILING MOUNTED SECURITY CAMERA, SEE ELEC. DWGS.
E.04	(E) ROOF HATCH TO REMAIN
E.18	ABANDON (E) ROOF HATCH- SEAL SHUT

CEILING LEGEND

- 2' x 2' SUSPENDED ACOUSTICAL CEILING TILE SYSTEM
- EXTERIOR CEMENT PLASTER
- GYPSUM BOARD
- 2' x 2' LIGHT FIXTURE, SEE ELEC. DWGS.
- SURFACE MOUNTED LIGHT FIXTURE, SEE ELEC. DWGS.
- SUSPENDED LIGHT FIXTURE, SEE ELEC. DWGS.
- ILLUMINATED EXIT LIGHT, SEE ELEC. DWGS.
- RECESSED DOWNLIGHT FIXTURE, SEE ELEC. DWGS.
- RECESSED DOWNLIGHT WALL WASHER FIXTURE, SEE ELEC. DWGS.
- HVAC - SUPPLY AIR GRILL, SEE MECH. DWGS.
- HVAC - RETURN AIR GRILL, SEE MECH. DWGS.
- HVAC - EXHAUST FAN, SEE MECH. DWGS.
- ROOF HATCH
- RECESSED COVE LIGHT FIXTURE
- 9'- 0" CEILING HEIGHT
- AP ACCESS PANEL
- CEILING MOUNTED SECURITY CAMERA

CEILING NOTES

1. CENTER LIGHTS IN ROOM. UNLESS NOTED OTHERWISE.
2. PROVIDE AN ACCESS PANEL IN ALL THE CEILINGS FOR ACCESS TO FIRE SMOKE DEVICES AND OTHER UTILITIES ABOVE THE CEILINGS REQUIRING ACCESS FOR MAINTENANCE.
3. MECHANICAL CONTRACTOR TO PROVIDE PLASTER GROUNDS ON ALL AIR DISTRIBUTION AND ACCESS PANEL OPENINGS IN WALLS AND HARD CEILINGS.
4. SEE STRUCT. DWGS. FOR ATTACHMENTS TO EXIST. MTL. DECK VS. UNISTRUT GRID.

DIVISION OF THE STATE ARCHITECT

IDENTIFICATION STAMP
DIV. OF THE STATE ARCHITECT
APP: 03-123218 INC:
REVIEWED FOR
SS ☑ FLS ☑ ACS ☑
DATE: 07/11/2024

MOORPARK COLLEGE

7075 CAMPUS RD
MOORPARK, CA 93021
TEL: (805) 378 - 1400

PROJECT TITLE AND SCHOOL LOCATION

ADMINISTRATION BUILDING SEISMIC REHABILITATION AND RENOVATION
7075 CAMPUS ROAD
MOORPARK, CA 91320

COMMISSIONED ARCHITECT

AMADOR

amador whittle architects, inc.
28328 AGOURA RD, 203 | AGOURA HILLS CA. 91301 | 805-558-4334

CONSULTANT

STAMPS/SEALS

LICENSED ARCHITECT
JENNIFER ANN AMADOR
C-22205
APRIL 30, 2025
DATE
STATE OF CALIFORNIA

1/9/24	DSA V2
8/23/23	DSA V1

SHEET TITLE:

REFLECTED CEILING PLAN

PROJECT NO: 21-MPC-040
PROJECT ARCH:
DRAWN: GW
CHECKED:
SHEET NUMBER:

A115

DATE: 1/9/24
SHEET: ___ OF ___

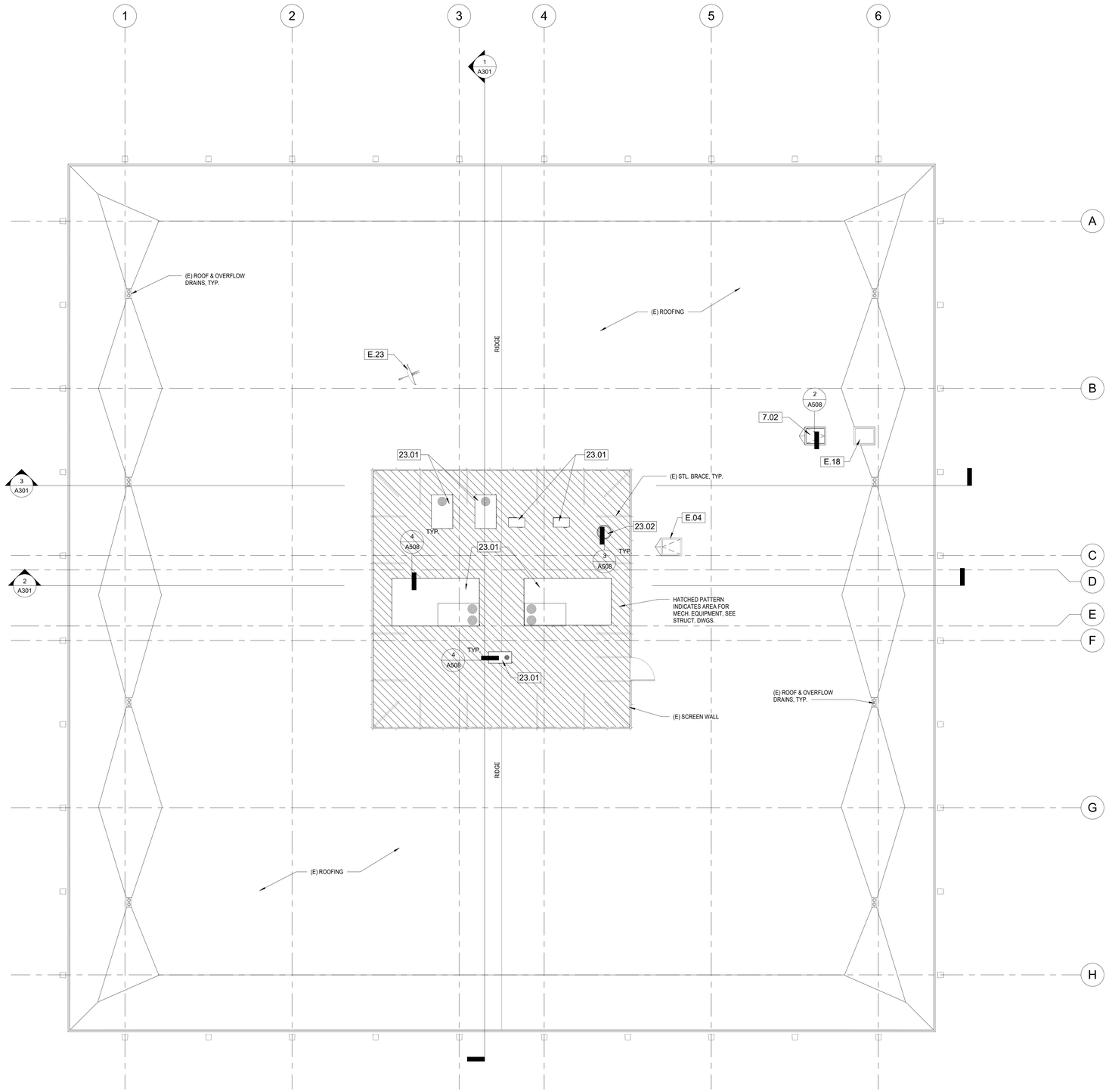

KEYNOTES

7.02	30" x 36" ROOF ACCESS HATCH
23.01	MECHANICAL UNIT, SEE MECHANICAL DRAWINGS
23.02	EXHAUST FAN UNIT, SEE MECHANICAL DRAWINGS
E.04	(E) ROOF HATCH TO REMAIN
E.18	ABANDON (E) ROOF HATCH- SEAL SHUT
E.23	(E) SATELLITE DISH

ROOF LEGEND

(E) LT. WT. CONC. IS LIMITED TO THE AREA SHADED AND ENCLOSED BY (E) SCREEN WALLS. OUTSIDE THE SCREEN WALL IS AN INSULATED FILL, WHERE POST-INSTALLED ANCHORS (EXPANSION ANCHORS, EPOXY ANCHORS, SCREW ANCHORS, SHOT PINS, ETC.) CANNOT BE INSTALLED. SEE STRUCT. DWGS.

ROOF NOTES:

1. FOR EXHAUST FAN, SEE 3/A508
2. FOR MECHANICAL UNIT CURB, SEE 4/A508
3. FOR VENT PIPE FLASHING, SEE 5/A508
4. AREAS BELOW ROOF WITH INSULATING FILL OVER METAL DECK NOTED ON STRUCTURAL ROOF FRAMING PLAN.
5. CONNECTIONS (CEILING SUPPORTS AND BRACES, DUCT/PIPE SUPPORTS & BRACES, ETC) WILL BE MADE TO UNISTRUTS SPANNING FROM (E) STEEL BEAM TO BEAM WHERE METAL ROOF DECK HAS INSULATING FILL (NO ANCHORS TO THIS TYPE OF ROOF DECK)
6. ANY NEW ROOFING TO BE CLASS 'A'

ROOF PLAN | 1/8" = 1'-0" | 1

DIVISION OF THE STATE ARCHITECT

IDENTIFICATION STAMP
DIV. OF THE STATE ARCHITECT
APP: 03-123218 INC:
REVIEWED FOR
SS ☑ FLS ☑ ACS ☑
DATE: 07/11/2024

MOORPARK COLLEGE

7075 CAMPUS RD
MOORPARK, CA 93021
TEL: (805) 378 - 1400

PROJECT TITLE AND SCHOOL LOCATION

ADMINISTRATION BUILDING SEISMIC REHABILITATION AND RENOVATION

7075 CAMPUS ROAD
MOORPARK, CA 91320

COMMISSIONED ARCHITECT

AMADOR

amador whittle architects, inc.
28328 AGOURA RD, 203 | AGOURA HILLS CA. 91301 | 805-558-4334

CONSULTANT

STAMPS/SEALS

LICENSED ARCHITECT
JEAN ANN AMADOR
C-22205
APRIL 30, 2025
DATE
STATE OF CALIFORNIA

1/9/24	DSA V2
8/23/23	DSA V1

SHEET TITLE:

ROOF PLAN

PROJECT NO. 21-MPC-040	PROJECT ARCH:
DRAWN: GW	CHECKED:
SHEET NUMBER: A116	
DATE: 1/9/24	SHEET: ___ OF ___

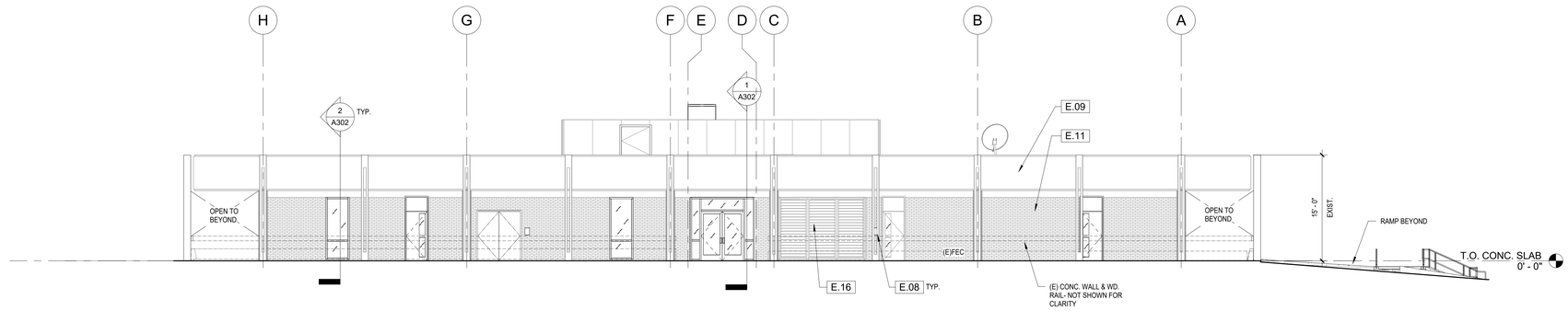

NORTH ELEVATION | 1/8" = 1'-0" | 1

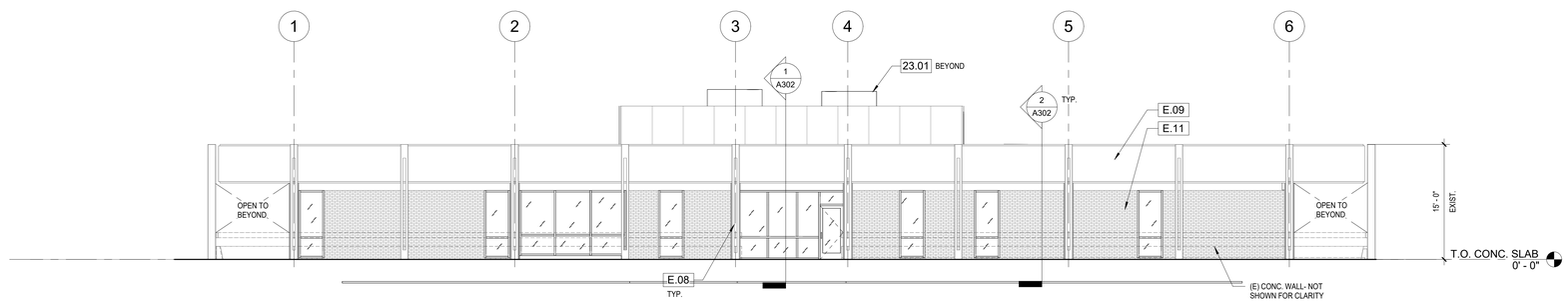

EAST ELEVATION | 1/8" = 1'-0" | 2

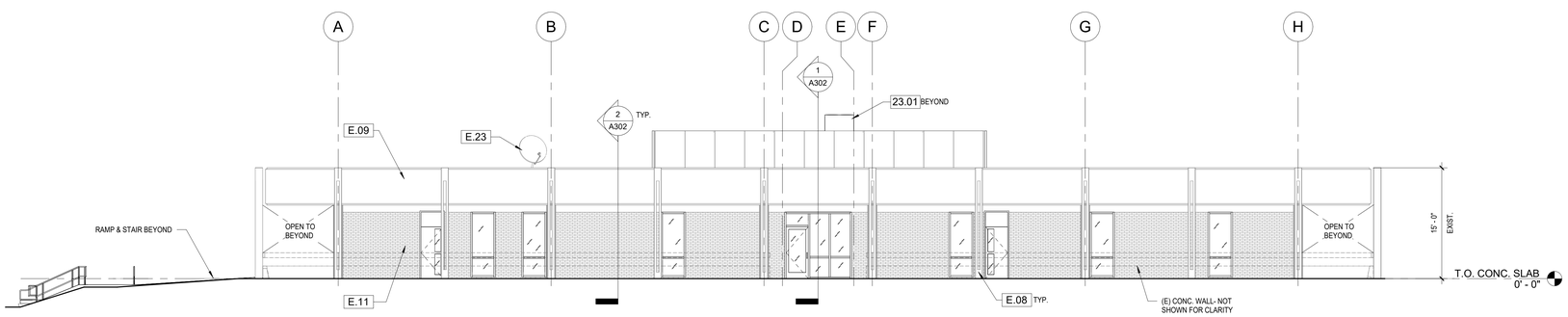

SOUTH ELEVATION | 1/8" = 1'-0" | 3

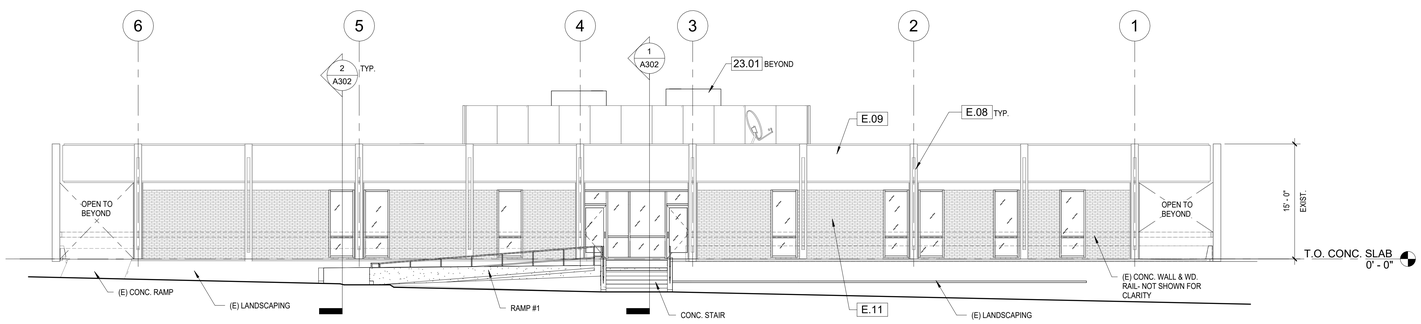

WEST ELEVATION | 1/8" = 1'-0" | 4

KEYNOTES

23.01	MECHANICAL UNIT, SEE MECHANICAL DRAWINGS
E.08	(E) CONCRETE COLUMN
E.09	(E) CONCRETE WALL, PAINT
E.11	(E) MASONRY WALL
E.16	(E) METAL LOUVERS
E.23	(E) SATELLITE DISH

DIVISION OF THE STATE ARCHITECT

IDENTIFICATION STAMP
DIV. OF THE STATE ARCHITECT
APP: 03-123218 INC:
REVIEWED FOR
SS ☑ FLS ☑ ACS ☑
DATE: 07/11/2024

MOORPARK COLLEGE

7075 CAMPUS RD
MOORPARK, CA 93021
TEL: (805) 378 - 1400

PROJECT TITLE AND SCHOOL LOCATION

ADMINISTRATION BUILDING SEISMIC REHABILITATION AND RENOVATION

7075 CAMPUS ROAD
MOORPARK, CA 91320

COMMISSIONED ARCHITECT

AMADOR

amador whittle architects, inc.
28328 AGOURA RD, 203 | AGOURA HILLS CA. 91301 | 805-558-4334

CONSULTANT

STAMPS/SEALS

LICENSED ARCHITECT
JEAN ANN AMADOR
C-32205
APRIL 30, 2025
DATE
STATE OF CALIFORNIA

1/9/24	DSA V2
8/23/23	DSA V1

SHEET TITLE:

EXTERIOR ELEVATIONS

PROJECT NO: 21-MPC-040	PROJECT ARCH:
DRAWN: GW	CHECKED:
SHEET NUMBER: A201	
DATE: 1/9/24	SHEET: ___ OF ___

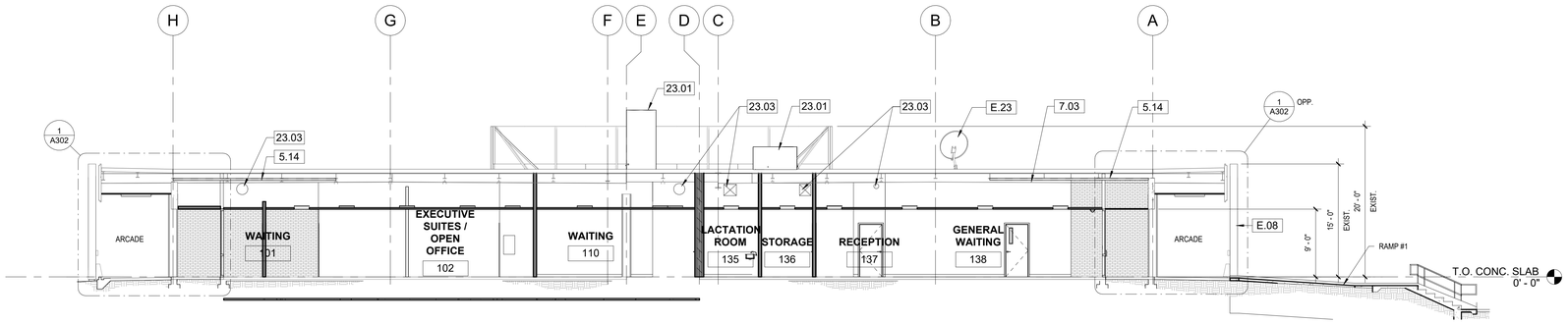

BUILDING SECTION | 1/8" = 1'-0" | 1

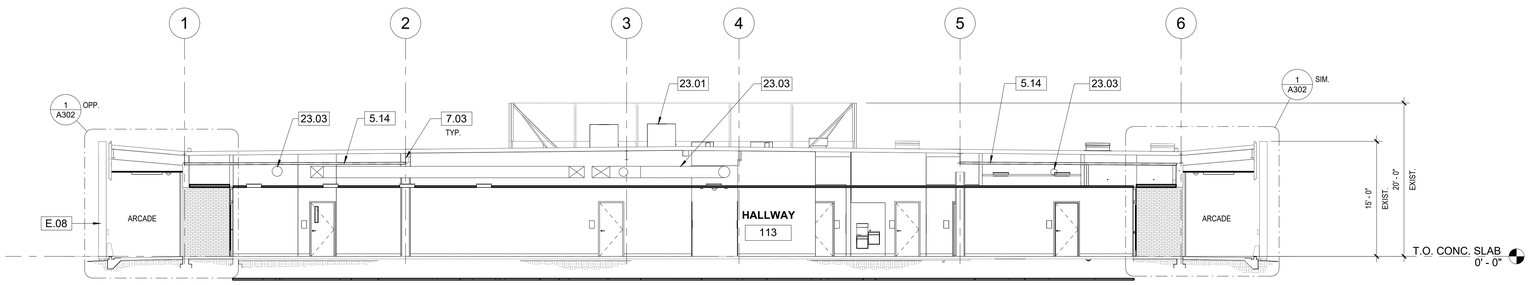

BUILDING SECTION | 1/8" = 1'-0" | 2

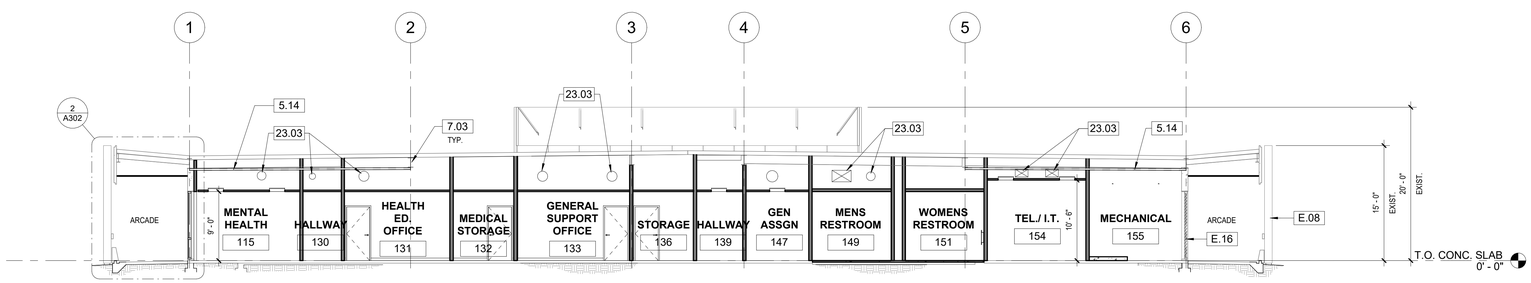

BUILDING SECTION | 1/8" = 1'-0" | 3

KEYNOTES

5.14	HSS BRACING, SEE STRUCT. DWGS.
7.03	SPRAY APPLIED FIREPROOFING ON (E) STL. BEAMS, TYP.
23.01	MECHANICAL UNIT, SEE MECHANICAL DRAWINGS
23.03	MECHANICAL DUCT, SEE MECHANICAL DRAWINGS
E.08	(E) CONCRETE COLUMN
E.16	(E) METAL LOUVERS
E.23	(E) SATELLITE DISH

DIVISION OF THE STATE ARCHITECT

IDENTIFICATION STAMP
DIV. OF THE STATE ARCHITECT
APP: 03-123218 INC:
REVIEWED FOR
SS ☑ FLS ☑ ACS ☑
DATE: 07/11/2024

MOORPARK COLLEGE

7075 CAMPUS RD
MOORPARK, CA 93021
TEL: (805) 378 - 1400

PROJECT TITLE AND SCHOOL LOCATION

ADMINISTRATION BUILDING SEISMIC REHABILITATION AND RENOVATION

7075 CAMPUS ROAD
MOORPARK, CA 91320

COMMISSIONED ARCHITECT

AMADOR

amador whittle architects, inc.
28328 AGOURA RD, 203 | AGOURA HILLS CA. 91301 | 805-558-4334

CONSULTANT

STAMPS/SEALS

LICENSED ARCHITECT
JEAN ANN AMADOR
C-22205
APRIL 30, 2025
DATE
STATE OF CALIFORNIA

1/9/24	DSA V2
8/23/23	DSA V1

SHEET TITLE:

BUILDING SECTIONS

PROJECT NO: 21-MPC-040	PROJECT ARCH: Designer
DRAWN: Author	CHECKED: Checker

SHEET NUMBER:

A301

DATE: 1/9/24 | SHEET: ___ OF ___

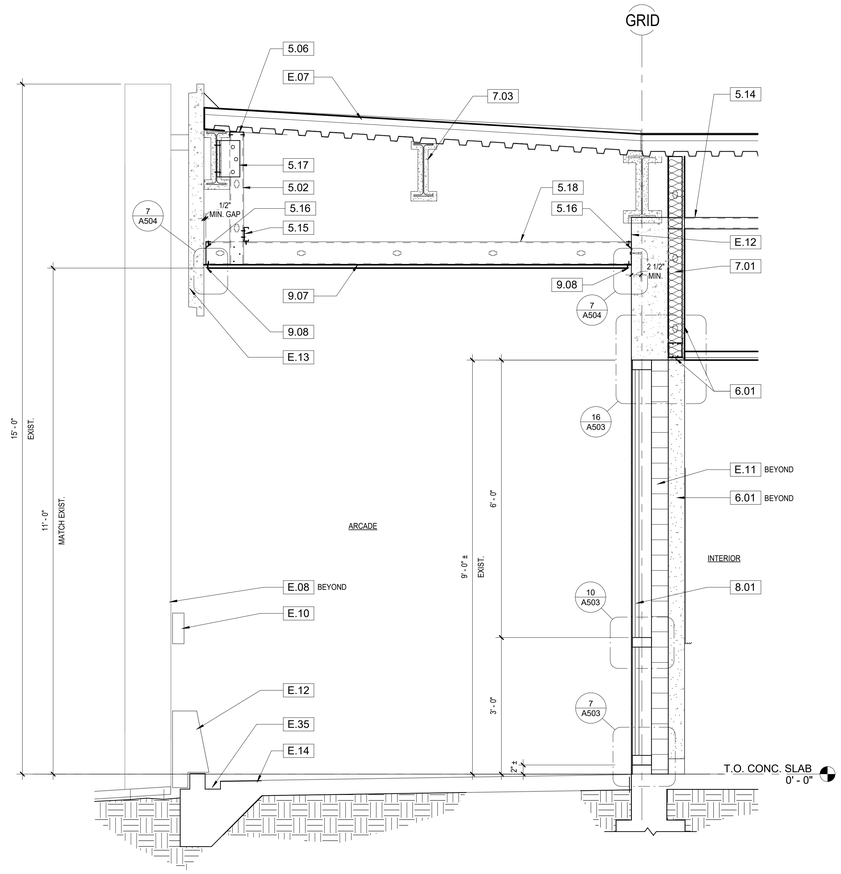

WALL SECTION AT WINDOW | 3/4" = 1'-0" | 2

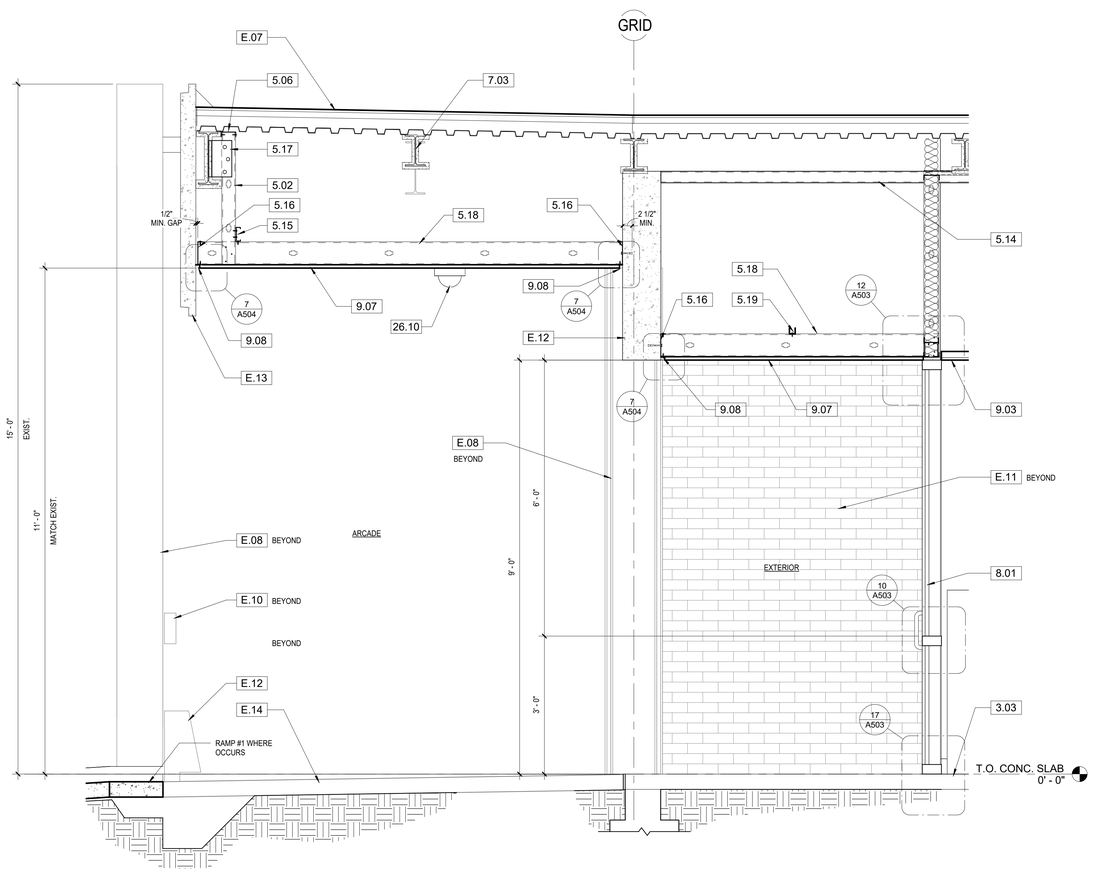

WALL SECTION @ ENTRY | 3/4" = 1'-0" | 1

KEYNOTES

3.03	2 1/2" THICK CONCRETE TOPPING INFILL
5.02	362S162-33 METAL STUDS @ 16" O.C.
5.06	METAL STUD TRACK- SAME SIZE & GUAGE AS STUDS
5.09	UNISTRUT ATTACHED TO (E) STL. BEAMS, SEE 33/S022
5.14	HSS BRACING, SEE STRUCT. DWGS.
5.15	CONTINUOUS 362S162-33
5.16	CONTINUOUS MATCHING TRACK W/ EXPANSION ANCHORS INTO (E) CONCRETE, SEE STRUCT. DWGS.
5.17	STL. ANGLE W/ SMS EA. LEG, SEE STRUCT. DWGS.
5.18	600S162-33 @ 16" O.C. CEILING JOISTS
5.19	1 1/2" x 1 1/2" x 16 GA. STL. CHANNEL W/ (2) #10 SMS @ EA. STUD, SEE 21/S021
6.01	5/8" GYPSUM BOARD
7.01	BATT INSULATION
7.03	SPRAY APPLIED FIREPROOFING ON (E) STL. BEAMS, TYP.
8.01	WINDOW SYSTEM.
9.03	ACOUSTICAL TILE SUSPENDED CEILING SYSTEM
9.07	EXTERIOR CEMENT PLASTER ON MTL. LATH & PAPER BACKING SOFFIT
9.08	3/4" VENTED REVEAL AT WALL, TYP. ENTIRE PERIMETER
26.10	CEILING MOUNTED SECURITY CAMERA, SEE ELEC. DWGS.
E.07	(E) ROOF
E.08	(E) CONCRETE COLUMN
E.10	(E) WOOD RAIL, REFINISH AND PAINT
E.11	(E) MASONRY WALL
E.12	(E) CONCRETE WALL
E.13	(E) CONCRETE FASCIA
E.14	(E) CONCRETE SLAB
E.35	(E) CONC. GUTTER

DIVISION OF THE STATE ARCHITECT

IDENTIFICATION STAMP
DIV. OF THE STATE ARCHITECT
APP: 03-123218 INC:
REVIEWED FOR
SS ☑ FLS ☑ ACS ☑
DATE: 07/11/2024

MOORPARK COLLEGE

7075 CAMPUS RD
MOORPARK, CA 93021
TEL: (805) 378 - 1400

PROJECT TITLE AND SCHOOL LOCATION

ADMINISTRATION BUILDING SEISMIC REHABILITATION AND RENOVATION
7075 CAMPUS ROAD
MOORPARK, CA 91320

COMMISSIONED ARCHITECT

AMADOR

amador whittle architects, inc.
28328 AGOURA RD, 203 | AGOURA HILLS CA. 91301 | 805-558-4334

CONSULTANT

STAMPS/SEALS

LICENSED ARCHITECT
BEN ANN AMADOR
C-22205
APRIL 30, 2025
DATE
STATE OF CALIFORNIA

1/9/24	DSA V2
8/23/23	DSA V1

SHEET TITLE:

WALL SECTIONS

PROJECT NO: 21-MPC-040	PROJECT ARCH: Designer
DRAWN: GW	CHECKED: Checker

SHEET NUMBER:

A302

DATE: 1/9/24 | SHEET: ___ OF ___

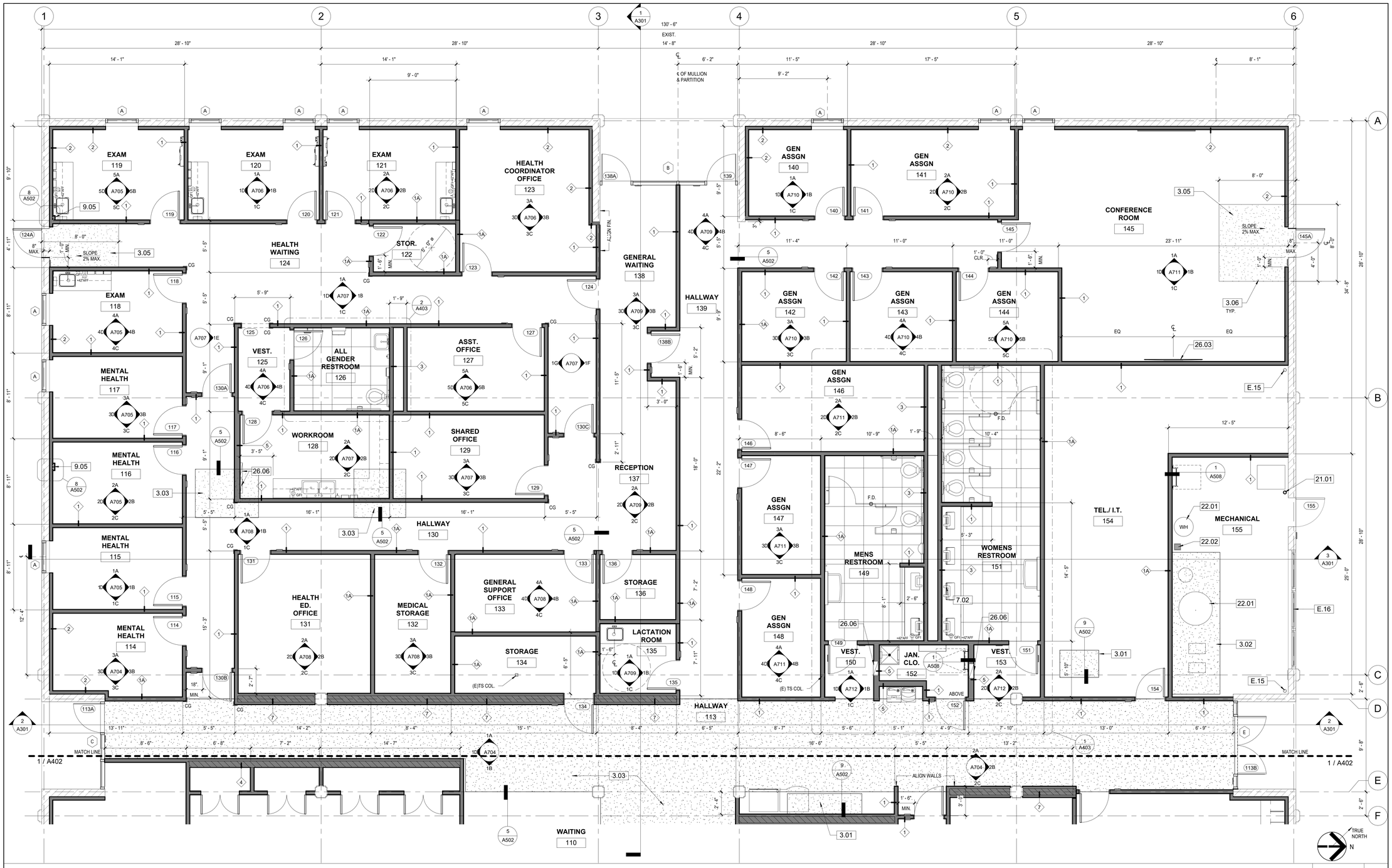

ENLARGED FLOOR PLAN - WEST | 1/4" = 1'-0" | 1

NOTES:

1. MINIMUM MANUEVERING CLEARANCES AT DOORS SHALL BE LEVEL AND CLEAR. THE LEVEL AREA SHALL HAVE A LENGTH IN THE DIRECTION OF THE DOOR SWING OF AT LEAST 60 INCHES AND THE LENGTH OPPOSITE THE DIRECTION OF DOOR SWING OF 48 INCHES AS MEASURED AT RIGHT ANGLES TO THE PLANE OF THE DOOR IN ITS CLOSED POSITION. CBC 11B-404.2.4.
2. DOOR JAMBS AT CORNERS OF ROOMS SHALL BE 4" MIN. FROM WALL INSIDE CORNER U.N.O.
3. ALL DIMENSIONS ARE TAKEN FROM FACE OF EXISTING CONSTRUCTION OR FACE OF STUD FOR NEW CONSTRUCTION, UNLESS NOTED OTHERWISE.
4. DEPRESS CONCRETE SLABS IN RESTROOMS 2"

LEGEND

- EXISTING PARTITION
- MASONRY WALL
- STUD PARTITION
- LOW PARTITION
- CONCRETE TOPPING INFILL, SEE 5/A502 U.N.O.
- PARTITION TYPE, SEE SHEET A502
- CG — WALL CORNER GUARD, SEE 3/A502
- CERAMIC TILE ON MORTAR SETTING BED ON 2" DEPRESSED SLAB

KEYNOTES

3.01	PROVIDE CONC. ON FOAM TO COVER (E) FLOOR OPENING, SEE 9/S300
3.02	CONCRETE HOUSEKEEPING PAD, SEE MECH. DWGS.
3.03	2 1/2" THICK CONCRETE TOPPING INFILL
3.05	PROVIDE CONC. SLAB TO CREATE A SLOPE TO THE DOOR THRESHOLD LESS THAN 2% MAX.; SEE SHEET S010
3.06	WARP SLAB TO DOOR THRESHOLD
7.02	30" x 36" ROOF ACCESS HATCH
9.05	FURR GYP. BD. AS REQUIRED WHEN (E) DOWNSPOUT IS EXPOSED
21.01	FIRE SPRINKLER RISER, SEE FIRE SPRINKLER DWGS.
22.01	WATER HEATER, SEE PLUMB. DWGS.
22.02	FLOOR SINK, SEE PLUMB. DWGS.
26.03	WALL MOUNTED FLAT SCREEN MONITOR; FOR BACKING SEE 8/S020
26.06	RECESSED ELEC. PANEL, SEE ELEC. DWGS.
E.15	(E) DOWNSPOUT; PROTECT IN PLACE
E.16	(E) METAL LOUVERS

DIVISION OF THE STATE ARCHITECT

IDENTIFICATION STAMP
DIV. OF THE STATE ARCHITECT
APP: 03-123218 INC:
REVIEWED FOR
SS ☑ FLS ☑ ACS ☑
DATE: 07/11/2024

MOORPARK COLLEGE

7075 CAMPUS RD
MOORPARK, CA 93021
TEL: (805) 378 - 1400

PROJECT TITLE AND SCHOOL LOCATION

ADMINISTRATION BUILDING SEISMIC REHABILITATION AND RENOVATION

7075 CAMPUS ROAD
MOORPARK, CA 91320

COMMISSIONED ARCHITECT

AMADOR

amador whittle architects, inc.
28328 AGOURA RD, 203 | AGOURA HILLS CA, 91301 | 805-558-4334

CONSULTANT

STAMPS/SEALS

1/9/24	DSA V2
8/23/23	DSA V1

SHEET TITLE:

ENLARGED FLOOR PLAN - WEST

PROJECT NO: 21-MPC-040
PROJECT ARCH:
DRAWN: GW
CHECKED:
SHEET NUMBER:

A401

DATE: 1/9/24
SHEET: ___ OF ___

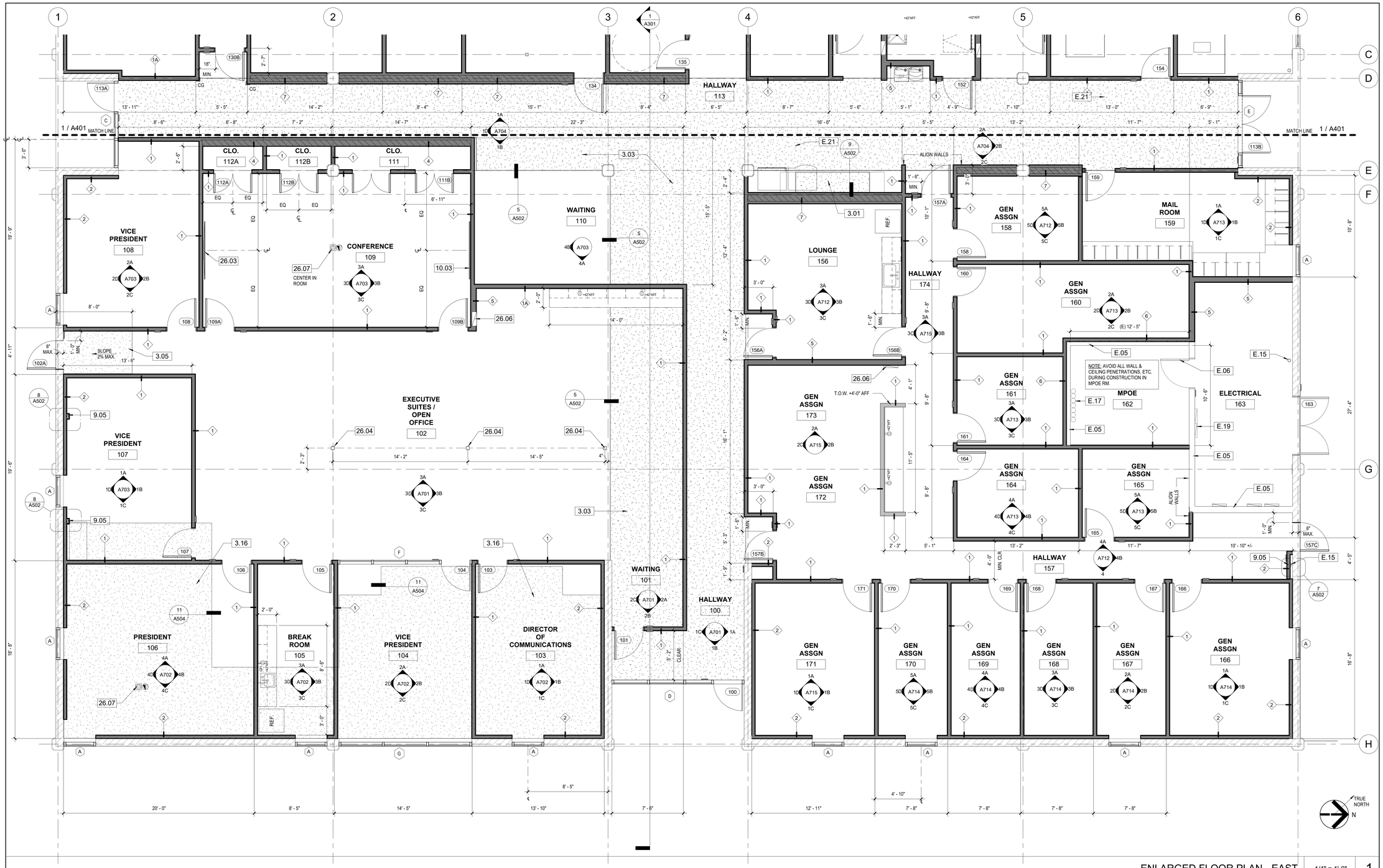

ENLARGED FLOOR PLAN - EAST | 1/4" = 1'-0" | 1

NOTES:

1. MINIMUM MANUEVERING CLEARANCES AT DOORS SHALL BE LEVEL AND CLEAR. THE LEVEL AREA SHALL HAVE A LENGTH IN THE DIRECTION OF THE DOOR SWING OF AT LEAST 60 INCHES AND THE LENGTH OPPOSITE THE DIRECTION OF DOOR SWING OF 48 INCHES AS MEASURED AT RIGHT ANGLES TO THE PLANE OF THE DOOR IN ITS CLOSED POSITION. CBC 11B-404.2.4.
2. DOOR JAMBS AT CORNERS OF ROOMS SHALL BE 4" MIN. FROM WALL INSIDE CORNER U.N.O.
3. ALL DIMENSIONS ARE TAKEN FROM FACE OF EXISTING CONSTRUCTION OR FACE OF STUD FOR NEW CONSTRUCTION, UNLESS NOTED OTHERWISE.
4. DEPRESS CONCRETE SLABS IN RESTROOMS 2"

LEGEND

- EXISTING PARTITION
- MASONRY WALL
- STUD PARTITION
- LOW PARTITION
- CONCRETE TOPPING INFILL, SEE 5/A502 U.N.O.
- # PARTITION TYPE, SEE SHEET A502
- CG WALL CORNER GUARD, SEE 3/A502
- CERAMIC TILE ON MORTAR SETTING BED ON 2" DEPRESSED SLAB

KEYNOTES

3.01	PROVIDE CONC. ON FOAM TO COVER (E) FLOOR OPENING, SEE 9/S300
3.03	2 1/2" THICK CONCRETE TOPPING INFILL
3.05	PROVIDE CONC. SLAB TO CREATE A SLOPE TO THE DOOR THRESHOLD LESS THAN 2% MAX.; SEE SHEET S010
3.16	5/8" THICK CONCRETE TOPPING INFILL
9.05	FURR GYP. BD. AS REQUIRED WHEN (E) DOWNSPOUT IS EXPOSED
10.03	4' x 6' WHITEBOARD; FOR BACKING SEE 8/S020
26.03	WALL MOUNTED FLAT SCREEN MONITOR; FOR BACKING SEE 8/S020
26.04	POWER POLE, SEE ELEC. DWGS.
26.06	RECESSED ELEC. PANEL, SEE ELEC. DWGS.
26.07	FLOOR POWER & DATA OUTLETS, SEE ELEC. DWGS.
E.05	(E) WALL TO REMAIN
E.06	(E) DOOR TO REMAIN
E.15	(E) DOWNSPOUT; PROTECT IN PLACE
E.17	(E) THRU FLOOR CONDUITS TO REMAIN
E.19	(E) ELECTRICAL PANEL TO REMAIN, SEE ELEC. DWGS.
E.21	(E) PLENUM BELOW TO BE ABANDONED

DIVISION OF THE STATE ARCHITECT

IDENTIFICATION STAMP
DIV. OF THE STATE ARCHITECT
APP: 03-123218 INC:
REVIEWED FOR
SS ☑ FLS ☑ ACS ☑
DATE: 07/11/2024

MOORPARK COLLEGE

7075 CAMPUS RD
MOORPARK, CA 93021
TEL: (805) 378 - 1400

PROJECT TITLE AND SCHOOL LOCATION

ADMINISTRATION BUILDING SEISMIC REHABILITATION AND RENOVATION
7075 CAMPUS ROAD
MOORPARK, CA 91320

COMMISSIONED ARCHITECT

AMADOR

amador whittle architects, inc.
28328 AGOURA RD, 203 | AGOURA HILLS CA. 91301 | 805-558-4334

CONSULTANT

STAMPS/SEALS

LICENSED ARCHITECT JEAN ANN AMADOR C-22205 APRIL 30, 2025 DATE STATE OF CALIFORNIA

1/9/24	DSA V2
8/23/23	DSA V1

SHEET TITLE:

ENLARGED FLOOR PLAN - EAST

PROJECT NO: 21-MPC-040 | PROJECT ARCH:
DRAWN: GW | CHECKED:
SHEET NUMBER:

A402

DATE: 1/9/24 | SHEET: ___ OF ___

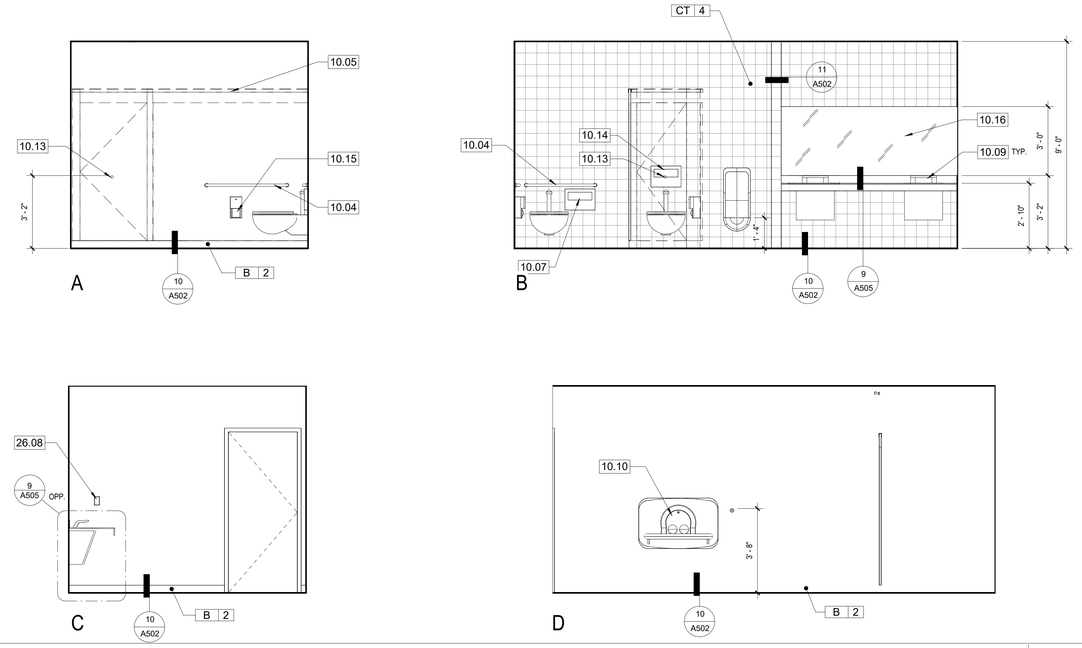

MENS RESTROOM ELEVATIONS | 3/8" = 1'-0" | 4

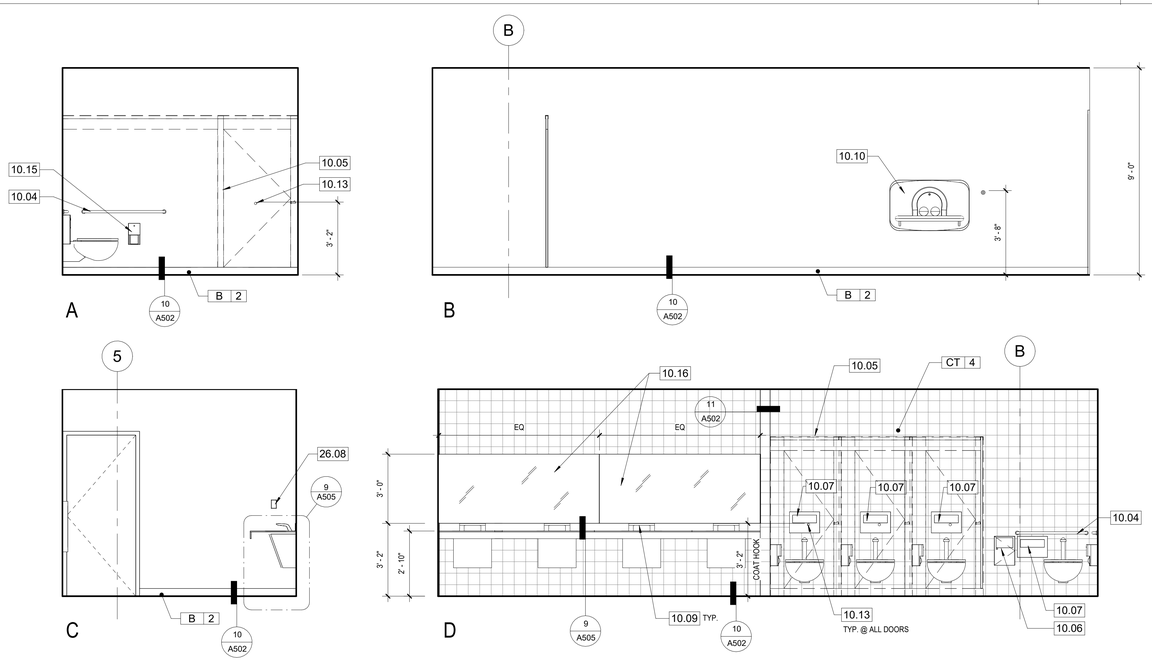

WOMENS RESTROOM ELEVATIONS | 3/8" = 1'-0" | 5

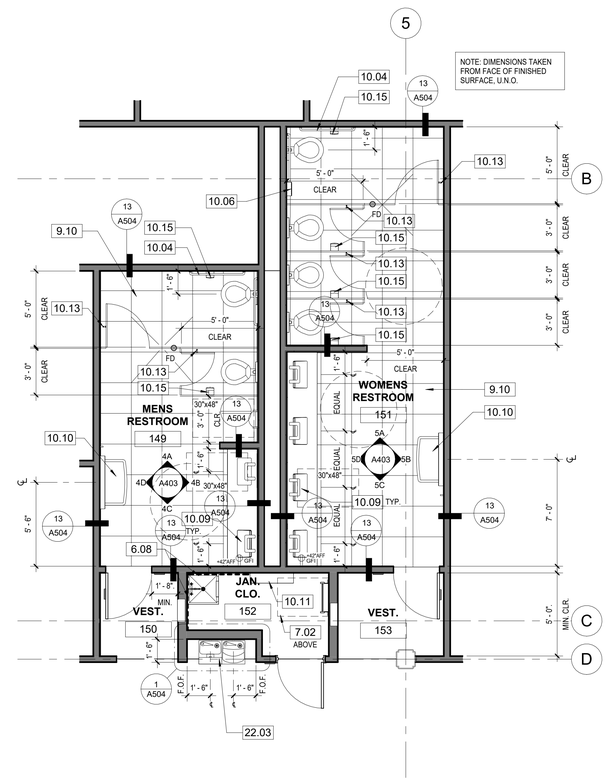

MENS & WOMENS RESTROOMS FLOOR PLAN | 1/4" = 1'-0" | 1

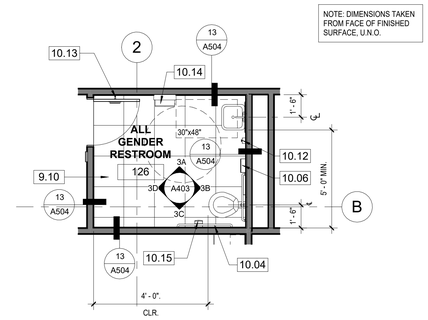

ALL GENDER RESTROOM PLAN | 1/4" = 1'-0" | 2

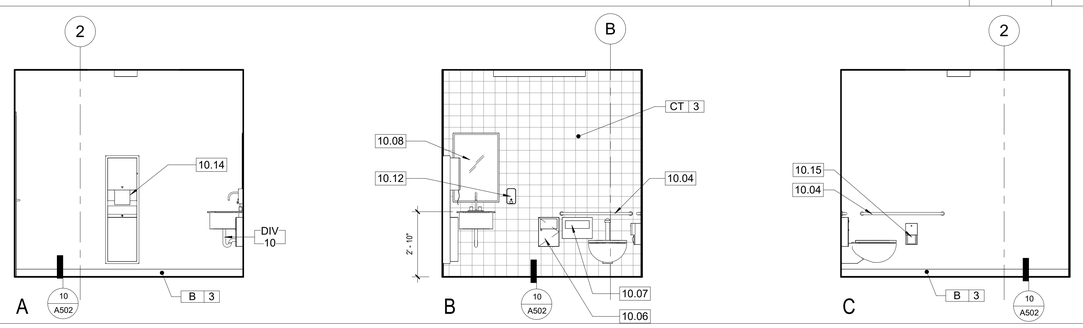

ALL GENDER RESTROOM ELEVATIONS | 3/8" = 1'-0" | 3

KEYNOTES

6.08	4'-0" WIDE x 4'-0" HIGH FRP PANELS
7.02	30" x 36" ROOF ACCESS HATCH
9.10	CERAMIC TILE ON MORTAR SETTING BED ON 2" DEPRESSED CONC. SLAB
10.04	GRAB BARS; FOR BACKING SEE 8/S020
10.05	TOILET PARTITION; FLOOR ANCHORED & CEILING HUNG
10.06	SANITARY NAPKIN DISPOSAL
10.07	TOILET SEAT COVER DISPENSER
10.08	24" X 36" MIRROR
10.09	ACCESSIBLE LAVATORY; PART OF INTEGRAL COUNTERTOP WITH SOAP DISPENSER & HAND DRYER
10.10	BABY CHANGING STATION
10.11	WALL MOUNTED BROOM HOLDER WITH SHELF
10.12	SOAP DISPENSER
10.13	DOOR MOUNTED COAT HOOK: PROVIDE AT EVERY PARTITION DOOR
10.14	PAPER TOWEL DISPENSER WITH WASTE RECEPTACLE
10.15	TOILET PAPER DISPENSER
10.16	3'-0" HIGH MIRROR
22.03	HI-LO DRINKING FOUNTAIN WITH BOTTLE FILLER
26.08	GFI OUTLET @ 42" A.F.F., SEE ELEC. DWGS.
DIV 10	SPECIALTIES

LEGEND

PT 1	MATERIAL FINISH, SEE SHEET A602

DIVISION OF THE STATE ARCHITECT

IDENTIFICATION STAMP
DIV. OF THE STATE ARCHITECT
APP: 03-123218 INC:
REVIEWED FOR
SS ☑ FLS ☑ ACS ☑
DATE: 07/11/2024

MOORPARK COLLEGE

7075 CAMPUS RD
MOORPARK, CA 93021
TEL: (805) 378 - 1400

PROJECT TITLE AND SCHOOL LOCATION

ADMINISTRATION BUILDING SEISMIC REHABILITATION AND RENOVATION

7075 CAMPUS ROAD
MOORPARK, CA 91320

COMMISSIONED ARCHITECT

AMADOR

amador whittle architects, inc.
28328 AGOURA RD, 203 | AGOURA HILLS CA, 91301 | 805-558-4334

CONSULTANT

STAMPS/SEALS

1/9/24 DSA V2
8/23/23 DSA V1

SHEET TITLE:

ENLARGED TOILET ROOMS FLOOR PLAN & ELEVATIONS

PROJECT NO: 21-MPC-040
PROJECT ARCH:
DRAWN: GW
CHECKED:
SHEET NUMBER:

A403

DATE: 1/9/24
SHEET: ___ OF ___

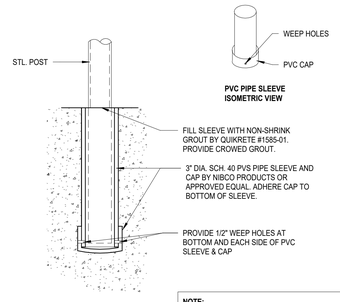

NOTE:
CONTRACTOR TO PROVIDE A CONTROL JOINT INTO THE CONCRETE ON BOTH SIDES FOR EACH POST. CONTRACTOR TO FOLLOW SOLVENT WELDING INSTRUCTIONS PER MANUFACTURER'S SPECIFIATIONS WHEN ADHERING PVC CAP TO BOTTOM OF SLEEVE.

TYP. POST EMBED | 3" = 1'-0" | 8

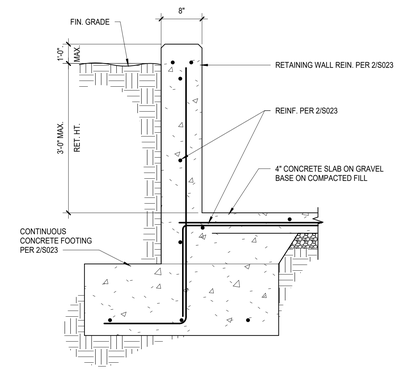

SITE WALL AT LANDING | 1" = 1'-0" | 4

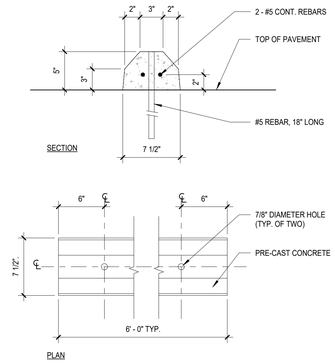

CONCRETE WHEEL STOP | 1 1/2" = 1'-0" | 1

NOTES:
1. HOT DIPPED GALVANIED RAILING AND POSTS IN SECTION AS LARGE AS POSSIBLE AFTER FABRICATION - GRIND SMOOTH ALL WELDS.
2. SLOPED WALKING SURFACES ALONG ACCESSIBLE ROUTE ROUTES SHALL BE DESIGNED AT 0.5% BELOW THE MAXIUM PRESCRIBED CODE REQUIREMENT TO ALLOW FOR CONSTRUCTION TOLERANCES.
3. MID-RAIL REQUIRED AT ALL RAIL CONDITIONS WHEN RAMP ELEVATION TO FINISH GRADE IS LESS THAN 30". GUARDRAILS WITH METAL PICKETS ARE REQUIRED IF RAMP ELEVATION TO FINISH GRADE EXCEEDS 30".

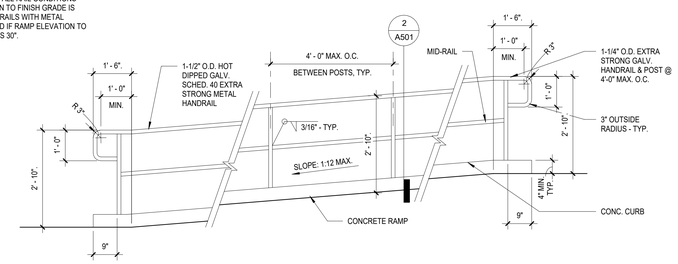

TYPICAL RAMP ELEVATION | 1/2" = 1'-0" | 5

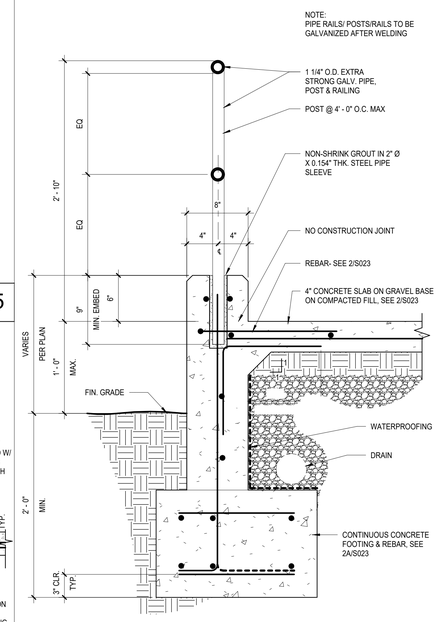

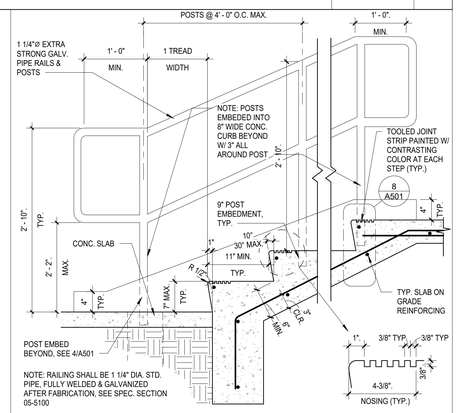

EXTERIOR STAIR SECTION | 1" = 1'-0" | 6

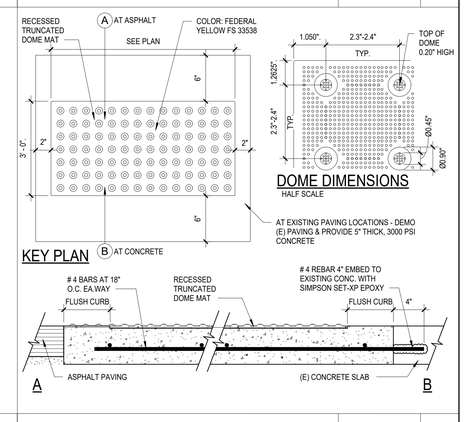

TACTILE WARNING SURFACE MAT | 1 1/2" = 1'-0" | 3

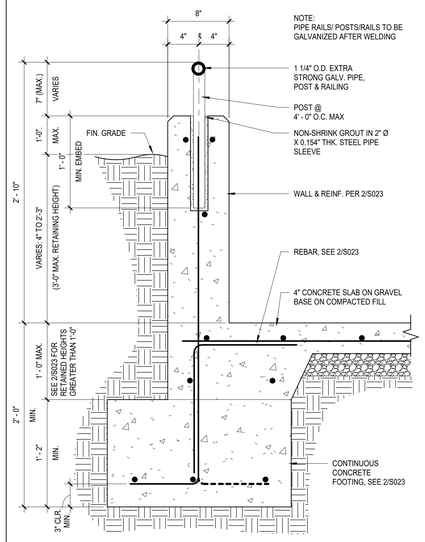

RAMP HANDRAIL AT LOW WALL | 1 1/2" = 1'-0" | 9

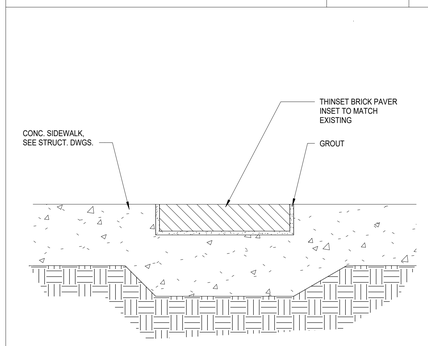

BRICK PAVER INSET | 3" = 1'-0" | 7

DIVISION OF THE STATE ARCHITECT

IDENTIFICATION STAMP
DIV. OF THE STATE ARCHITECT
APP: 03-123218 INC:
REVIEWED FOR
SS ☑ FLS ☑ ACS ☑
DATE: 07/11/2024

MOORPARK COLLEGE

7075 CAMPUS RD
MOORPARK, CA 93021
TEL: (805) 378 - 1400

PROJECT TITLE AND SCHOOL LOCATION

ADMINISTRATION BUILDING SEISMIC REHABILITATION AND RENOVATION
7075 CAMPUS ROAD
MOORPARK, CA 91320

COMMISSIONED ARCHITECT

AMADOR

amador whittle architects, inc.
28328 AGOURA RD, 203 | AGOURA HILLS CA, 91301 | 805-558-4334

CONSULTANT

STAMPS/SEALS

LICENSED ARCHITECT
JEAN ANN AMADOR
C-22205
APRIL 30, 2025
DATE
STATE OF CALIFORNIA

1/9/24	DSA V2
8/23/23	DSA V1

SHEET TITLE:

SITE DETAILS

PROJECT NO: 21-MPC-040	PROJECT ARCH: Designer
DRAWN: Author	CHECKED: Checker

SHEET NUMBER:

A501

DATE: 1/9/24 | SHEET: ___ OF ___

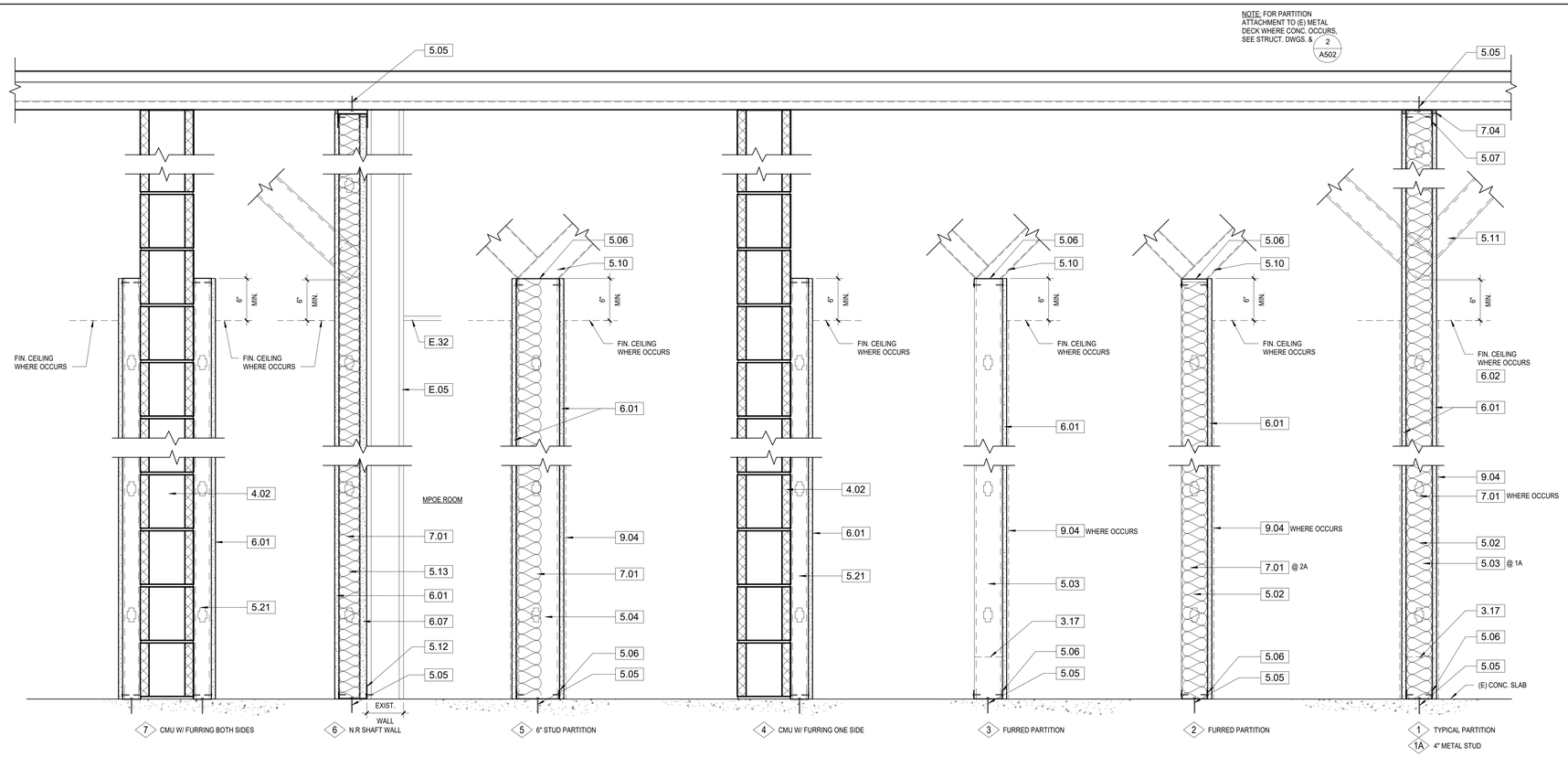

KEYNOTES

3.17	PROVIDE 6" HIGH CONC. CURB AT RESTROOMS, SEE 13/A504
4.02	8" THICK CMU WALL, SEE STRUCT. DWGS.
5.02	362S162-33 METAL STUDS @ 16" O.C.
5.03	4" x 20 GA. METAL STUDS @ 24" O.C.
5.04	600S162-33 METAL STUDS @ 16" O.C.
5.05	1/4" DIA. x 1 5/8" MIN. EMBED HILTI 'HUS' CONC. SCREW ANCHOR @ 24" O.C. (PER ICC ESR-3027)
5.06	METAL STUD TRACK- SAME SIZE & GUAGE AS STUDS
5.07	SLOTTED TRACK SYSTEM: CEMCO ICC-ES ESR #3016 OR APPROVED EQUAL
5.10	METAL STUD KICKER BRACING, SEE 19 & 22/S021
5.11	METAL STUD KICKER BRACING, SEE 13/S021 AT WALLS UNDER (E) MTL. DECK W/ INSULATING FILL ONLY; NOT REQUIRED WHERE TOP OF WALL IS ANCHORED TO (E) CONC. FILL
5.12	4" J-RUNNER- SAME GAUGE AS STUDS
5.13	4" C-H STUDS @ 24" O.C.
5.21	250S125-33 METAL STUDS @ 24" O.C.
6.01	5/8" GYPSUM BOARD
6.02	5/8" TYPE 'X' GYPSUM BOARD
6.07	1" GYPSUM BOARD LINER
7.01	BATT INSULATION
7.04	CONTINUOUS FIRE CAULKING
9.04	THINSET CERAMIC TILE
E.05	(E) WALL TO REMAIN
E.32	(E) CEILING TO REMAIN

PARTITION NOTES

1. INSTALL 5/8" MOLD RESISTANT GYPSUM BOARD AT ALL WET LOCATIONS NOT COVERED BY TILE FINISH
2. INSTALL 5/8" CEMENTITOUS BACKER BOARD AT ALL CERAMIC TILE LOCATIONS
3. SEE INTERIOR ELEVATIONS FOR EXTENT OF FRP NOT SHOWN HERE.
4. FOR LOCATIONS OF UNISTRUT, SEE STRUCT. DWGS.
5. FOR BRACING AT FULL HEIGHT WALLS, SEE STRUCT. DWGS.
6. PROVIDE 6" HIGH CONC. CURB AT RESTROOM WALLS.
7. INSTALL METAL STUD BRIDGING ON THE SIDE WHERE WALL FINISH DOES NOT OCCUR PER 15/S021

PARTITION TYPES | 1 1/2" = 1'-0" | 1

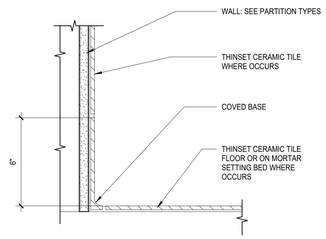

C.T. COVED BASE | 3" = 1'-0" | 10

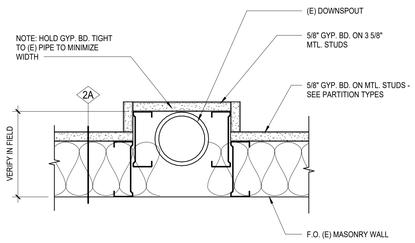

WALL FURRING PLAN @ (E) DOWNSPOUT | 3" = 1'-0" | 8

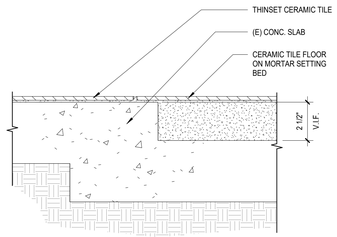

C.T. FLOOR @ DEPRESSED SLAB | 3" = 1'-0" | 6

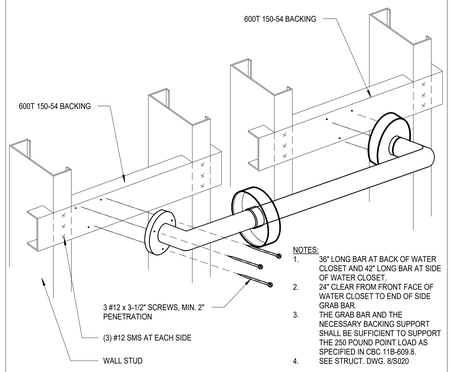

NOTES:
1. 36" LONG BAR AT BACK OF WATER CLOSET AND 42" LONG BAR AT SIDE OF WATER CLOSET.
2. 24" CLEAR FROM FRONT FACE OF WATER CLOSET TO END OF SIDE GRAB BAR.
3. THE GRAB BAR AND THE NECESSARY BACKING SUPPORT SHALL BE SUFFICIENT TO SUPPORT THE 250 POUND POINT LOAD AS SPECIFIED IN CBC 11B-609.8. SEE STRUCT. DWG. 8/S020
4.

GRAB BAR | 3" = 1'-0" | 4

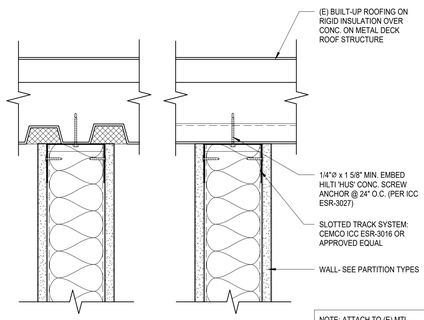

NOTE: ATTACH TO (E) MTL. DECK ONLY WHERE STRUCTURAL CONC. OCCURS; BRACE ALL OTHER CONDITIONS, SEE STRUCT. DWGS.

TOP OF WALL AT (E) ROOF DECK | 3" = 1'-0" | 2

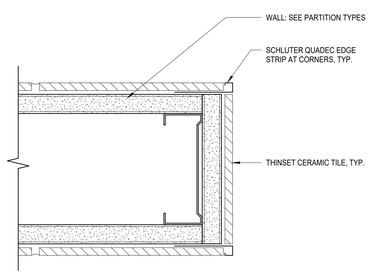

C.T. WALL EDGE- PLAN VIEW | 6" = 1'-0" | 11

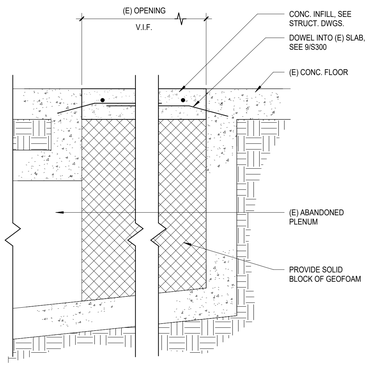

FLOOR SLAB INFILL | 1 1/2" = 1'-0" | 9

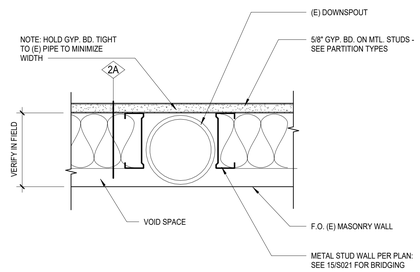

WALL FURRING PLAN @ (E) DOWNSPOUT | 3" = 1'-0" | 7

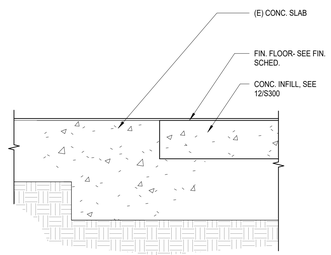

SLAB INFILL @ DEPRESSED FLOOR | 3" = 1'-0" | 5

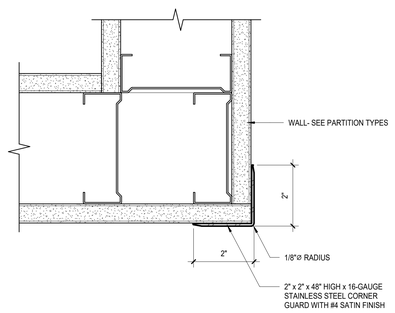

WALL CORNER GUARD | 6" = 1'-0" | 3

DIVISION OF THE STATE ARCHITECT

IDENTIFICATION STAMP
DIV. OF THE STATE ARCHITECT
APP: 03-123218 INC:
REVIEWED FOR
SS ☑ FLS ☑ ACS ☑
DATE: 07/11/2024

MOORPARK COLLEGE

7075 CAMPUS RD
MOORPARK, CA 93021
TEL: (805) 378 - 1400

PROJECT TITLE AND SCHOOL LOCATION

ADMINISTRATION BUILDING SEISMIC REHABILITATION AND RENOVATION

7075 CAMPUS ROAD
MOORPARK, CA 91320

COMMISSIONED ARCHITECT

AMADOR

amador whittle architects, inc.
28328 AGOURA RD, 203 | AGOURA HILLS CA. 91301 | 805-558-4334

CONSULTANT

STAMPS/SEALS

LICENSED ARCHITECT JEAN ANN AMADOR C-22205 APRIL 30, 2025 DATE STATE OF CALIFORNIA

1/9/24	DSA V2
8/23/23	DSA V1

SHEET TITLE:

PARTITION TYPES & DETAILS

PROJECT NO. 21-MPC-040 | PROJECT ARCH:
DRAWN: GW | CHECKED:
SHEET NUMBER:

A502

DATE: 1/9/24 | SHEET: ___ OF ___

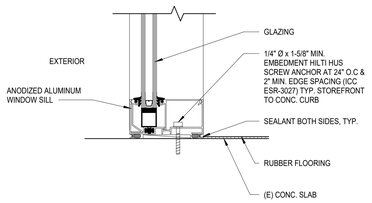

WINDOW SILL | 3" = 1'-0" | 17

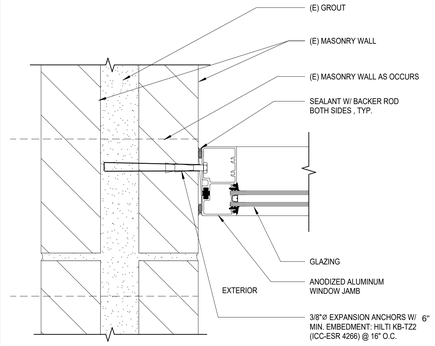

WINDOW JAMB | 3" = 1'-0" | 13

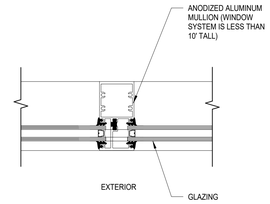

WINDOW MULLION | 3" = 1'-0" | 9

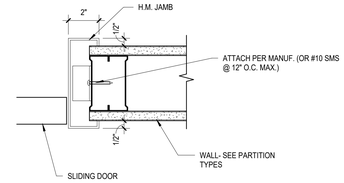

DOOR JAMB/ HEAD SIM. | 3" = 1'-0" | 5

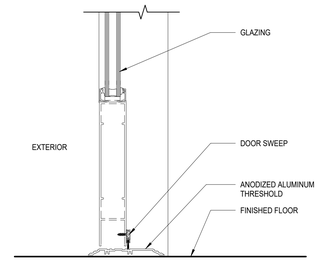

EXTERIOR DOOR THRESHOLD | 3" = 1'-0" | 1

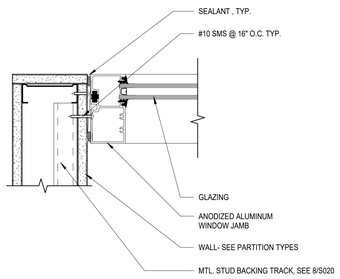

WINDOW JAMB | 3" = 1'-0" | 18

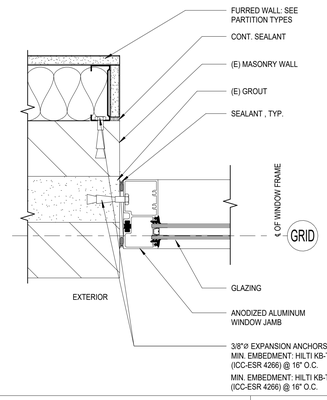

WINDOW JAMB | 3" = 1'-0" | 14

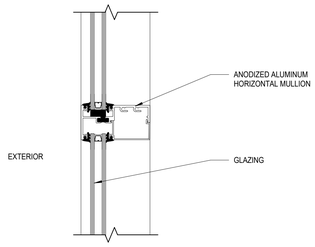

WINDOW MULLION | 3" = 1'-0" | 10

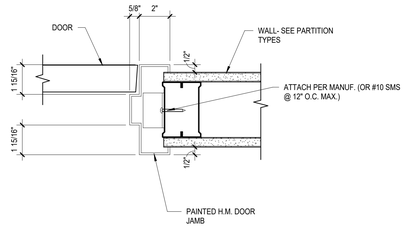

DOOR JAMB/ HEAD SIM. | 3" = 1'-0" | 6

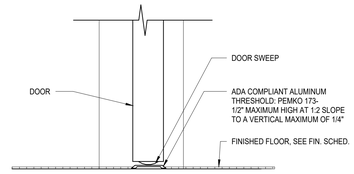

DOOR THRESHOLD | 3" = 1'-0" | 2

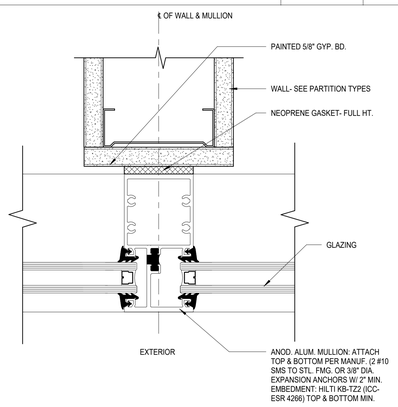

WALL END AT MULLION | 6" = 1'-0" | 19

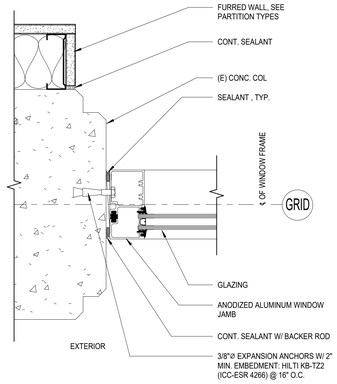

WINDOW JAMB @ (E) COL. | 3" = 1'-0" | 15

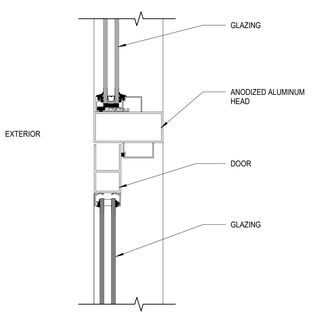

DOOR HEAD @ STOREFRONT | 3" = 1'-0" | 11

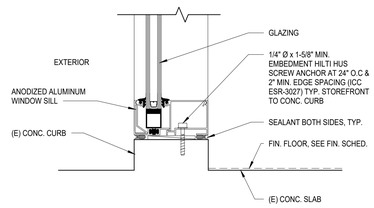

WINDOW SILL | 3" = 1'-0" | 7

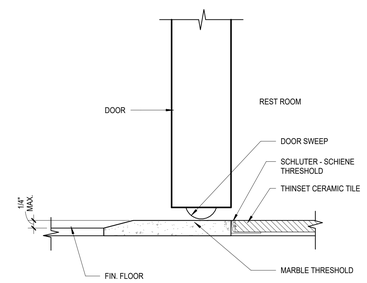

DOOR THRESHOLD | 6" = 1'-0" | 3

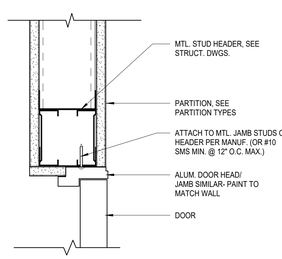

CONCEALED DOOR HEAD/ JAMB SIM. | 3" = 1'-0" | 20

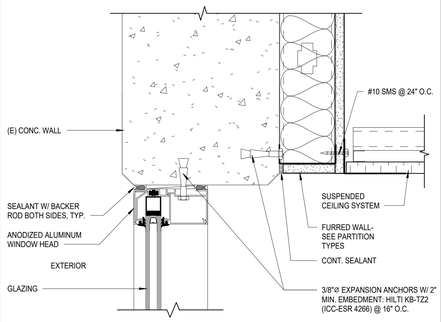

WINDOW HEAD | 3" = 1'-0" | 16

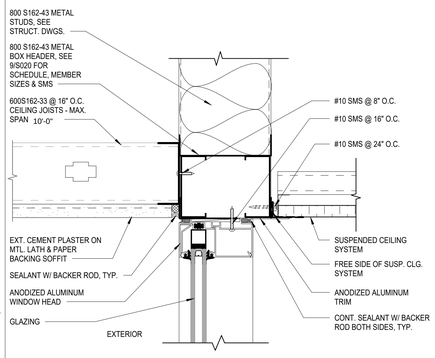

WINDOW HEAD | 3" = 1'-0" | 12

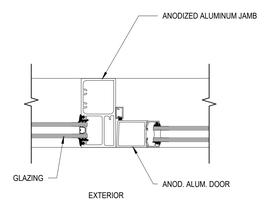

DOOR JAMB | 3" = 1'-0" | 8

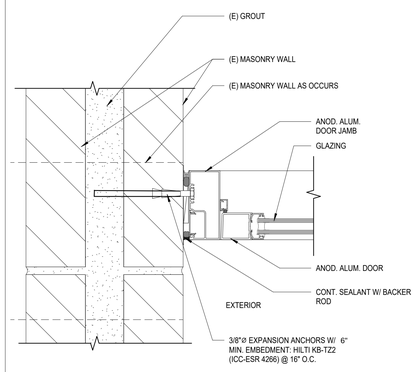

DOOR JAMB | 3" = 1'-0" | 4

DIVISION OF THE STATE ARCHITECT

IDENTIFICATION STAMP
DIV. OF THE STATE ARCHITECT
APP: 03-123218 INC:
REVIEWED FOR
SS ☑ FLS ☑ ACS ☑
DATE: 07/11/2024

MOORPARK COLLEGE

7075 CAMPUS RD
MOORPARK, CA 93021
TEL: (805) 378 - 1400

PROJECT TITLE AND SCHOOL LOCATION

ADMINISTRATION BUILDING SEISMIC REHABILITATION AND RENOVATION
7075 CAMPUS ROAD
MOORPARK, CA 91320

COMMISSIONED ARCHITECT

AMADOR

amador whittle architects, inc.
28328 AGOURA RD, 203 | AGOURA HILLS CA. 91301 | 805-558-4334

CONSULTANT

STAMPS/SEALS

LICENSED ARCHITECT
JEAN ANN AMADOR
C-22205
APRIL 30, 2025
DATE
STATE OF CALIFORNIA

△		
△		
△		
△		
	1/9/24	DSA V2
	8/23/23	DSA V1

SHEET TITLE:

DOOR & WINDOW DETAILS

PROJECT NO: 21-MPC-040 | PROJECT ARCH: Designer
DRAWN: Author | CHECKED: Checker
SHEET NUMBER:

A503

DATE: 1/9/24 | SHEET: ___ OF ___

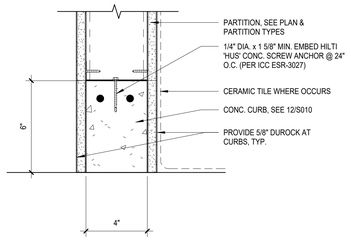

WALL AT CURB | 3" = 1'-0" | 13

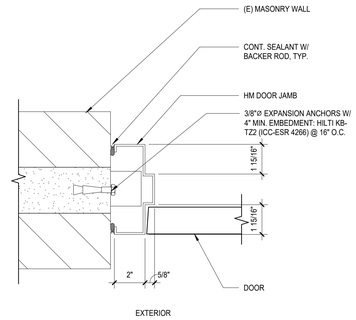

EXTERIOR DOOR JAMB | 3" = 1'-0" | 9

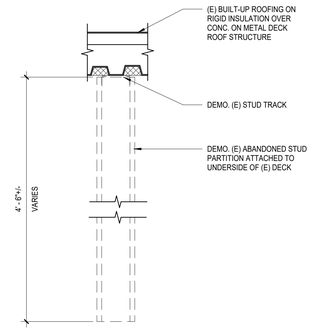

TOP OF WALL AT (E) ROOF DECK | 1 1/2" = 1'-0" | 5

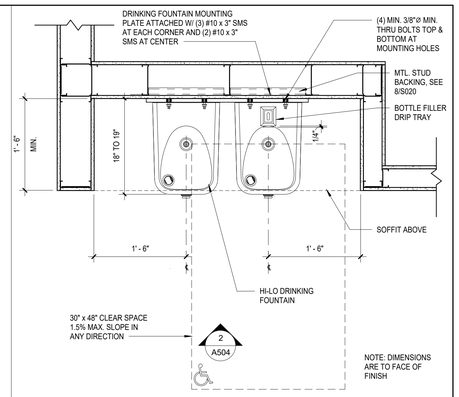

HI-LO DRINKING FOUNTAIN W/ BOTTLE FILLER PLAN | 1" = 1'-0" | 1

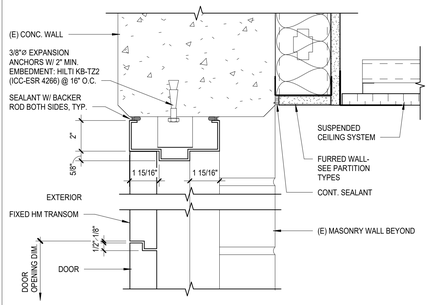

EXT. DOOR HEAD W/ TRANSOM | 3" = 1'-0" | 10

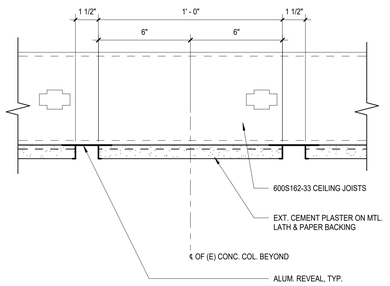

SOFFIT REVEALS | 3" = 1'-0" | 6

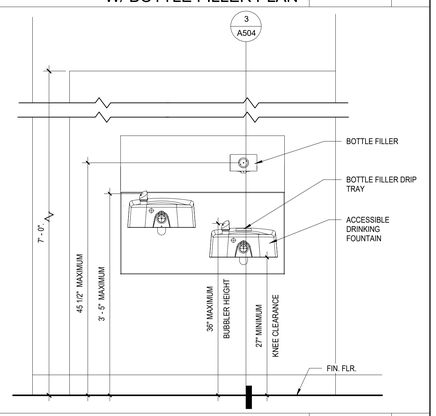

HI-LO DRINKING FOUNTAIN ELEVATION | 1" = 1'-0" | 2

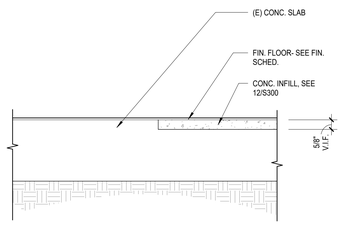

CONC. INFILL @ DEPRESSED SLAB | 3" = 1'-0" | 11

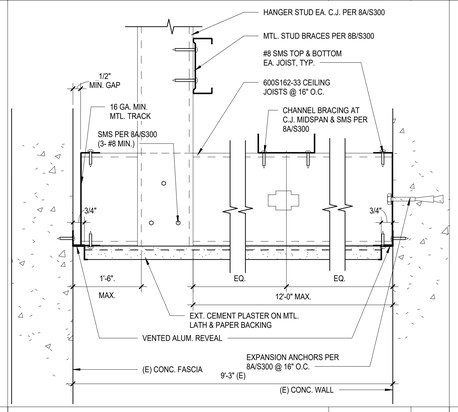

SOFFIT REVEAL AT WALL | 3" = 1'-0" | 7

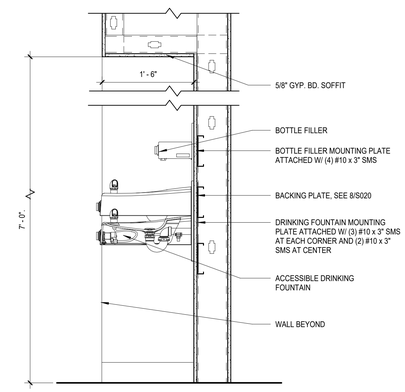

HI-LO DRINKING FOUNTAIN SECTION | 1" = 1'-0" | 3

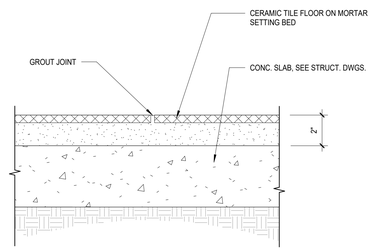

CERAMIC TILE FLOOR | 3" = 1'-0" | 12

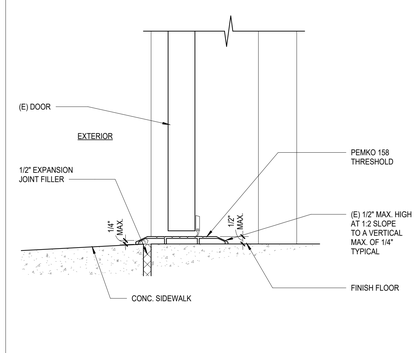

EXTERIOR DOOR SILL | 3" = 1'-0" | 8

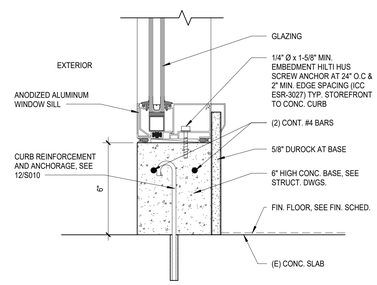

WINDOW SILL | 3" = 1'-0" | 4

DIVISION OF THE STATE ARCHITECT

IDENTIFICATION STAMP
DIV. OF THE STATE ARCHITECT
APP: 03-123218 INC:
REVIEWED FOR
SS ☑ FLS ☑ ACS ☑
DATE: 07/11/2024

MOORPARK COLLEGE

7075 CAMPUS RD
MOORPARK, CA 93021
TEL: (805) 378 - 1400

PROJECT TITLE AND SCHOOL LOCATION

ADMINISTRATION BUILDING SEISMIC REHABILITATION AND RENOVATION
7075 CAMPUS ROAD
MOORPARK, CA 91320

COMMISSIONED ARCHITECT

AMADOR

amador whittle architects, inc.
28328 AGOURA RD, 203 | AGOURA HILLS CA. 91301 | 805-558-4334

CONSULTANT

STAMPS/SEALS

LICENSED ARCHITECT
LEAH ANN AMADOR
C-22205
APRIL 30, 2025
DATE
STATE OF CALIFORNIA

1/9/24	DSA V2
8/23/23	DSA V1

SHEET TITLE:

DETAILS

PROJECT NO: 21-MPC-040	PROJECT ARCH: Designer
DRAWN: Author	CHECKED: Checker

SHEET NUMBER:

A504

DATE: 1/9/24 | SHEET: ___ OF ___

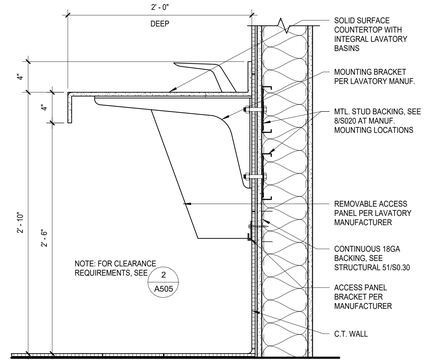

LAVATORY COUNTER | 1 1/2" = 1'-0" | 9

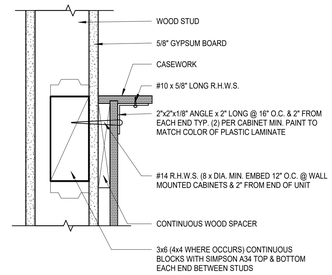

WALL ANCHORAGE (TOP) | 3" = 1'-0" | 5

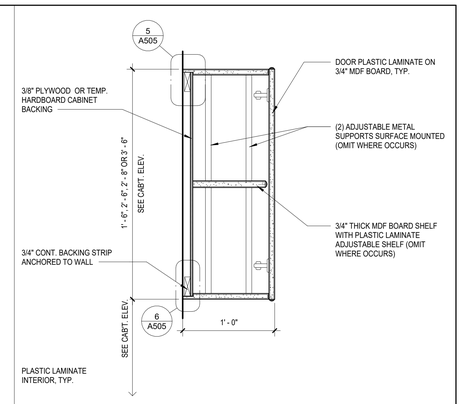

UPPER WALL CABINET | 1 1/2" = 1'-0" | 1

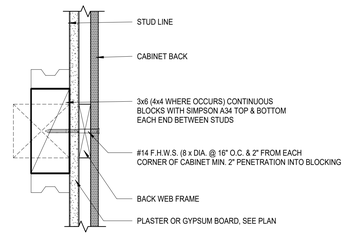

WALL ANCHORAGE (MID) | 3" = 1'-0" | 6

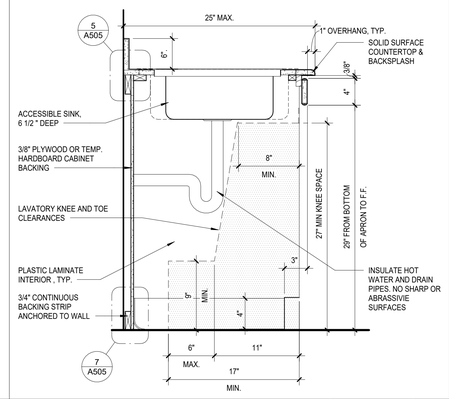

ACCESSIBLE SINK | 1 1/2" = 1'-0" | 2

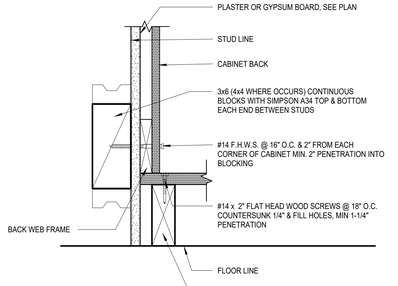

WALL ANCHORAGE (BASE) | 3" = 1'-0" | 7

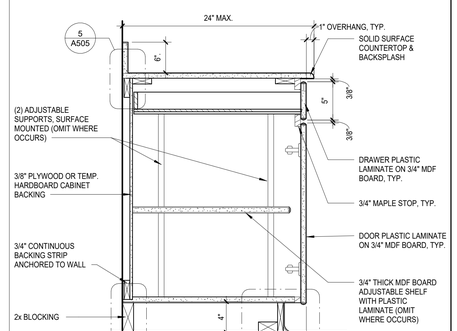

BASE CABINET DRAWER & DOOR | 1 1/2" = 1'-0" | 3

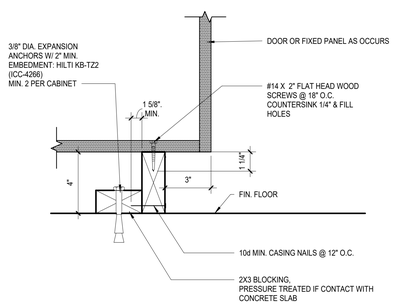

BASE ANCHORAGE DETAIL | 3" = 1'-0" | 8

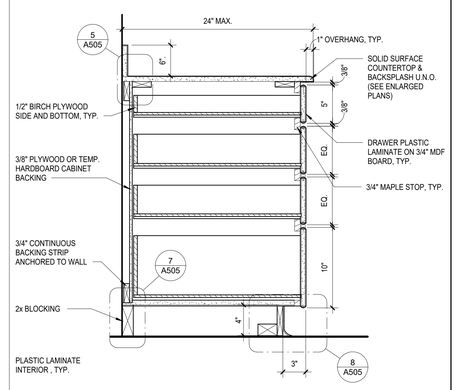

BASE CABINET WITH 4 DRAWERS | 1 1/2" = 1'-0" | 4

DIVISION OF THE STATE ARCHITECT

IDENTIFICATION STAMP
DIV. OF THE STATE ARCHITECT
APP: 03-123218 INC:
REVIEWED FOR
SS ☑ FLS ☑ ACS ☑
DATE: 07/11/2024

MOORPARK COLLEGE

7075 CAMPUS RD
MOORPARK, CA 93021
TEL: (805) 378 - 1400

PROJECT TITLE AND SCHOOL LOCATION

ADMINISTRATION BUILDING SEISMIC REHABILITATION AND RENOVATION

7075 CAMPUS ROAD
MOORPARK, CA 91320

COMMISSIONED ARCHITECT

AMADOR

amador whittle architects, inc.
28328 AGOURA RD, 203 | AGOURA HILLS CA. 91301 | 805-558-4334

CONSULTANT

STAMPS/SEALS

LICENSED ARCHITECT
JEAN ANN AMADOR
C-22205
APRIL 30, 2025
DATE
STATE OF CALIFORNIA

△		
△		
△		
△		
	1/9/24	DSA V2
	8/23/23	DSA V1

SHEET TITLE:

CASEWORK DETAILS

PROJECT NO: 21-MPC-040	PROJECT ARCH:
DRAWN: GW	CHECKED:
SHEET NUMBER: A505	
DATE: 1/9/24	SHEET: ___ OF ___

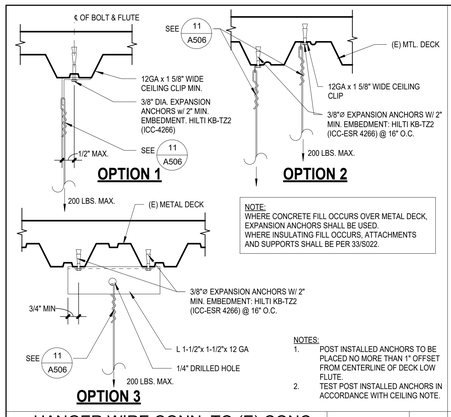

NOTE:
WHERE CONCRETE FILL OCCURS OVER METAL DECK, EXPANSION ANCHORS SHALL BE USED. WHERE INSULATING FILL OCCURS, ATTACHMENTS AND SUPPORTS SHALL BE PER 33/S022.

NOTES:
1. POST INSTALLED ANCHORS TO BE PLACED NO MORE THAN 1" OFFSET FROM CENTERLINE OF DECK LOW FLUTE.
2. TEST POST INSTALLED ANCHORS IN ACCORDANCE WITH CEILING NOTE.

HANGER WIRE CONN. TO (E) CONC. OVER MET. DECK | 1 1/2" = 1'-0" | 12

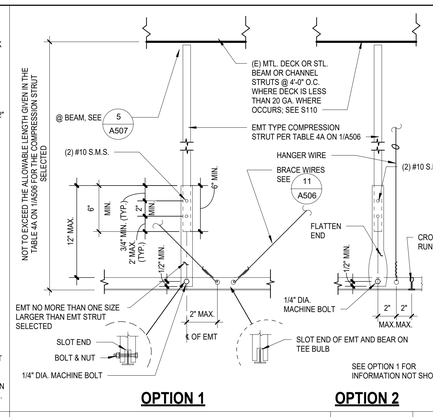

EMT TYPE STRUT | 1 1/2" = 1'-0" | 8

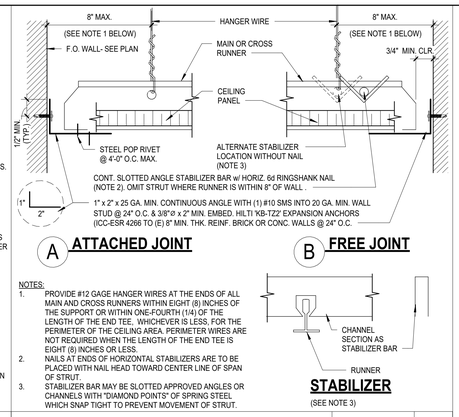

NOTES:
1. PROVIDE #12 GAGE HANGER WIRES AT THE ENDS OF ALL MAIN AND CROSS RUNNERS WITHIN EIGHT (8) INCHES OF THE SUPPORT OR WITHIN ONE-FOURTH (1/4) OF THE LENGTH OF THE END TEE. WHICHEVER IS LESS, FOR THE PERIMETER OF THE CEILING AREA. PERIMETER WIRES ARE NOT REQUIRED WHEN THE LENGTH OF THE END TEE IS EIGHT (8) INCHES OR LESS.
2. NAILS AT ENDS OF HORIZONTAL STABILIZERS ARE TO BE PLACED WITH NAIL HEAD TOWARD CENTER LINE OF SPAN OF STRUT.
3. STABILIZER BAR MAY BE SLOTTED APPROVED ANGLES OR CHANNELS WITH "DIAMOND POINTS" OF SPRING STEEL WHICH SNAP TIGHT TO PREVENT MOVEMENT OF STRUT.

CEILING PERIMETER | 3" = 1'-0" | 4

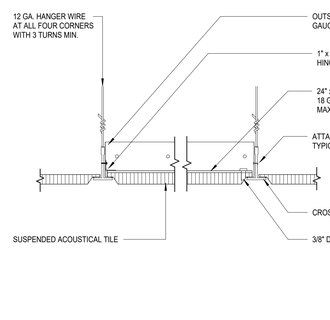

ACCESS PANEL | 3" = 1'-0" | 13

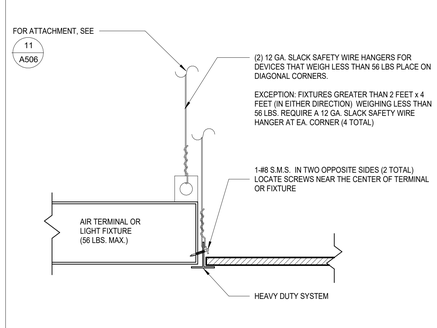

LIGHTING FIXTURE/DEVICE SUPPORT | 3" = 1'-0" | 9

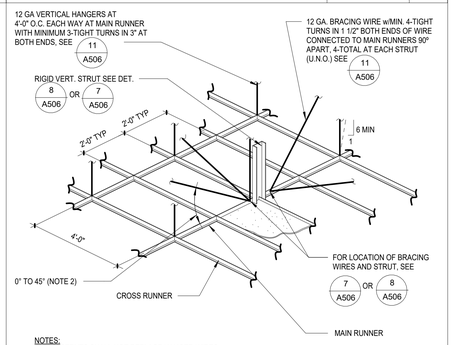

NOTES:
1. STRUTS SHALL NOT REPLACE HANGER WIRES.
2. THE MINIMUM ACCEPTABLE ANGLE IS DETERMINED SUCH THAT THE WIRES DO NOT INTERFERE WITH THE RUNNERS, LIGHT FIXTURES, ETC. AND REMAIN STRAIGHT AND UNOBSTRUCTED.

SUSP. CEILING BRACING ASSEMBLY | 3" = 1'-0" | 5

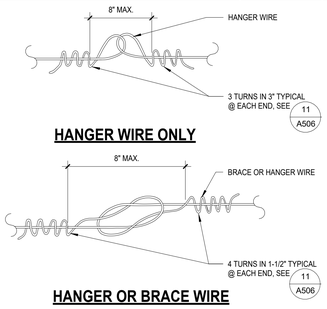

NOTES:
1. WIRE SPLICES ARE SHOWN LOOSELY TIED FOR ILLUSTRATIVE PURPOSES ONLY AND SHALL BE DRAWN TIGHT TO COMPLETE INSTALLATION WHEN CONSTRUCTED.
2. WIRE LOOPS SHALL BE TIGHTLY WRAPPED AND SHARPLY BENT TO PREVENT ANY VERTICAL MOVEMENT OR ROTATION WITHIN THE LOOPS.
3. EACH HANGER AND BRACE WIRE SHALL BE SPLICED NO MORE THAN ONCE ALONG ITS LENGTH.

CEILING WIRE SPLICES | 3" = 1'-0" | 6

CEILING NOTES (BASIS DOCUMENT IR 25-2.19 REV 11/3/23):

1. **CEILING SYSTEM GENERAL NOTES:**
   A. CEILING SYSTEM COMPONENTS SHALL COMPLY WITH ASTM C635 AND SECTION 5.1 OF ASTM E580.
   B. THE CEILING GRID SYSTEM MUST BE RATED HEAVY DUTY AS DEFINED BY ASTM C635.
   C. CEILING SYSTEMS. THE FOLLOWING CEILING SYSTEM(S) IS/ARE PART OF THE SCOPE OF THIS PROJECT.

HEAVY DUTY NON-RATED GRID SYSTEM	ARMSTRONG	CHICAGO METALLIC	USG
	PRELUDE PLUS XL	1200 SEISMIC SERIES HEAVY DUTY	DONN DXLA
MAIN RUNNER	HD8201	270	DXLA26
CROSS RUNNER (2x4 GRID)	XL8223	1252	DXLA216
CROSS RUNNER	XL8341	1254	DXLA424

   D. SEISMIC WALL CLIP - NOT USED
   E. CEILING PANELS SHALL NOT SUPPORT ANY LIGHT FIXTURES, AIR TERMINALS OR DEVICES
   F. FOR CEILING INSTALLATIONS UTILIZING ACOUSTICAL TILE PANELS OF MINERAL OR GLASS FIBER, IT IS NOT MANDATORY TO PROVIDE 3/4" CLEARANCE BETWEEN THE ACOUSTICAL TILE PANELS AND THE WALL ON THE SIDES OF THE CEILING WHICH ARE FREE TO SLIP. FOR ALL OTHER CEILING PANEL TYPES, PROVIDE 3/4" CLEARANCE BETWEEN THE CEILING PANEL AND THE WALL ON THE SIDES OF THE CEILING FREE SLIP. CLEARANCE BETWEEN CEILING GRID RUNNERS/MEMBERS AND WALLS SHALL COMPLY WITH THE DETAILS OF THESE DRAWINGS REGARDLESS OF CEILING TILE MATERIAL.

2. **MATERIALS:**
   A. CEILING WIRE SHALL BE CLASS 1 ZINC COATED (GALVANIZED) CARBON STEEL CONFORMING TO ASTM A641. WIRE SHALL BE #12 GAGE (0.106" DIAMETER) WITH SOFT TEMPER AND MINIMUM TENSILE STRENGTH = 70 KSI.
   B. GALVANIZED SHEET STEEL (INCLUDING THAT USED FOR METAL STUD AND TRACK COMPRESSION STRUTS/POST) SHALL CONFORM TO ASTM A653, OR OTHER EQUIVALENT SHEET STEEL LISTED IN SECTION A3.1 OF THE NORTH AMERICAN SPECIFICATION FOR THE DESIGN OF COLD-FORMED STEEL STRUCTURAL MEMBERS, (AISI S100).
   MATERIAL 43 MIL (18 GAGE) AND LIGHTER SHALL HAVE MINIMUM YIELD STRENGTH OF 33 KSI.
   MATERIAL 54 MIL (16 GAGE) AND HEAVIER SHALL HAVE MINIMUM YIELD STRENGTH OF 50 KSI.
   C. ELECTRICAL METALLIC TUBE (EMT) SHALL BE ANSI C80.3UL 797 CARBON STEEL WITH 000 GALVANIZING. EMT SHALL HAVE MINIMUM YIELD STRENGTH (F_y) OF 30 KSI AND MINIMUM ULTIMATE STRENGTH (F_u) OF 48 KSI.

3. **ATTACHMENT OF HANGER AND BRACING WIRES:**
   A. SEPARATE ALL CEILING HANGER AND BRACING WIRES AT LEAST SIX (6) INCHES FROM ALL UNBRACED DUCTS, PIPES, CONDUIT, ETC.
   B. HANGER AND BRACING WIRES SHALL NOT ATTACH TO OR BEND AROUND OBSTRUCTIONS INCLUDING BUT NOT LIMITED TO: PIPING, DUCTWORK, CONDUIT AND EQUIPMENT.
   C. HANGER WIRES THAT ARE MORE THAN ONE (HORIZONTAL) IN SIX (VERTICAL) OUT OF PLUMB SHALL HAVE COUNTER-SLOPING WIRES.
   D. SLACK SAFETY WIRES SHALL BE CONSIDERED HANGER WIRES FOR INSTALLATION AND TESTING REQUIREMENTS.
   E. HANGER AND BRACING WIRE ANCHORAGE TO THE STRUCTURE SHALL BE INSTALLED IN SUCH A MANNER THAT THE DIRECTION OF THE ANCHORAGE ALIGNS CLOSELY WITH THE DIRECTION OF THE WIRE. (E.G. BRACING WIRE CEILING CLIPS MUST BE BENT AS SHOWN IN THE DETAILS AND ROTATED AS REQUIRED TO ALIGN CLOSELY WITH THE DIRECTION OF THE WIRE, ETC.)

4. **FASTENERS AND WELDING:**
   A. SHEET METAL SCREWS SHALL COMPLY WITH ASTM C1513, ASME B18.6.3. PENETRATION OF SCREWS THROUGH JOINED MATERIAL SHALL NOT BE LESS THAN THREE EXPOSED THREADS.
   B. EXPANSION ANCHORS SHALL BE: HILTI KB-TZ2 (ICC-4266)
   C. POWER-ACTUATED FASTENERS SHALL BE: HILTI X-U (ICC-2269)
   D. IF NOT OTHERWISE SPECIFIED IN THE EVALUATION REPORT, POWER-ACTUATED FASTENERS INSTALLED IN STEEL SHALL BE INSTALLED SO THE ENTIRE POINTED END OF THE FASTENER IS DRIVEN THROUGH THE STEEL MEMBER.
   E. POWER-ACTUATED FASTENERS IN CONCRETE ARE NOT PERMITTED FOR BRACING WIRES.
   F. CONCRETE REINFORCEMENT AND PRESTRESSING TENDONS SHALL BE LOCATED BY NON-DESTRUCTIVE MEANS PRIOR TO INSTALLING POST - INSTALLED ANCHOR.
   G. WELDING SHALL BE IN ACCORDANCE WITH AWS D1.3 USING E60XX SERIES ELECTRODES.

5. **TESTING:** ALL FIELD TESTING MUST BE PERFORMED IN THE PRESENCE OF THE PROJECT INSPECTOR OR A SPECAIL INSPECTOR.
   A. POST- INSTALLED ANCHORS IN CONCRETE USED TO SUPPORT HANGER WIRES SHALL BE TESTED AT A FREQUENCY OF 10 PERCENT. POWER ACTUATED FASTENERS IN CONCRETE SHALL BE FIELD TESTED FOR 200 LBS. IN TENSION. ALL OTHER POST-INSTALLED ANCHORS IN CONCRETE SHALL BE TESTED IN ACCORDANCE WITH CBC SECTION 1910A.5.
   B. POST-INSTALLED ANCHORS IN CONCRETE USED TO ATTACH BRACING WIRES SHALL BE TESTED AT A FREQUENCY OF 50 PERCENT IN ACCORDANCE WITH CBC SECTION 1910A.5.

6. **LIGHT FIXTURES:**
   A. ALL LIGHT FIXTURES SHALL BE POSITIVELY ATTACHED TO THE CEILING SUSPENSION SYSTEMS BY MECHANICAL MEANS PER CALIFORNIA ELECTRICAL CODE (CEC) ARTICLE 410.36. A MINIMUM OF TWO SCREWS OR APPROVED FASTENERS CAPABLE OF RESISTING A HORIZONTAL FORCE EQUAL TO THE WEIGHT OF THE FIXTURE ARE REQUIRED AT EACH LIGHT FIXTURE, PER ASTM E580, SECTION 5.3.1.
   B. SURFACE-MOUNTED LIGHT FIXTURES SHALL BE ATTACHED TO THE MAIN RUNNER WITH AT LEAST TWO POSITIVE CLAMPING DEVICES ON EACH FIXTURE. THE CLAMPING DEVICE SHALL COMPLETELY SURROUND THE SUPPORTING CEILING RUNNER AND BE MADE OF STEEL WITH A MINIMUM THICKNESS OF #14 GAGE. ROTATIONAL SPRING CATCHES DO NOT COMPLY. A #12 GAGE SLACK SAFETY WIRE SHALL BE CONNECTED FROM EACH CLAMPING DEVICE TO THE STRUCTURE ABOVE . PROVIDE ADDITIONAL SUPPORTS WHEN LIGHT FIXTURES MEASURE EIGHT (8) FEET OR LONGER OR EXCEED 56 LB. MAXIMUM SPACING BETWEEN SUPPORTS SHALL NOT EXCEED EIGHT (8) FEET.
   C. LIGHT FIXTURES WEIGHTING LESS THAN OR EQUAL TO 10 LB. MAY BE SUPPORTED DIRECTLY ON THE CEILING RUNNERS, BUT THEY SHALL HAVE A MINIMUM OF ONE (1) #12 GAGE SLACK SAFETY WIRE CONNECTED FROM THE FIXTURE HOUSING TO THE STRUCTURE ABOVE.
   D. LIGHT FIXTURES WEIGHTING GREATER THAN 10 LB. BUT LESS THAN OR EQUAL TO 56LBS. MAY BE SUPPORTED DIRECTLY ON THE CEILING RUNNERS, BUT THEY SHALL HAVE A MINIMUM OF TWO (2) #12 GAGE SLACK SAFETY WIRES CONNECTED FROM THE FIXTURE HOUSING AT DIAGONAL CORNERS TO THE STRUCTURE ABOVE.

   EXCEPTION: ALL LIGHT FIXTURES GREATER THEN TWO FEET WIDE BY FOUR FEET LONG AND NO MORE THAN EIGHT FEET LONG WEIGHING LESS THAN 56 LBS. SHALL HAVE A #12 GAGE SLACK SAFETY WIRE AT EACH CORNER.
   E. ALL LIGHT FIXTURES WEIGHTING GREATER THAN 56 LB. SHALL BE INDEPENDENTLY SUPPORTED BY NOT LESS THAN FOUR (4) TAUT #12 GAGE HANGER WIRES (ONE AT EACH CORNER) ATTACHED FROM THE FIXTURE HOUSING TO THE STRUCTURE ABOVE OR OTHER APPROVED HANGERS.

7. **SERVICES WITHIN THE CEILING**
   A. ALL FLEXIBLE SPRINKLER HOSE FITTING MOUNTING BRACKETS, CEILING-MOUNTED AIR TERMINALS, SOLAR DAYLIGHT TUBES, OTHER SERVICES SHALL BE POSITIVELY ATTACHED TO THE CEILING SUSPENSION SYSTEMS BY MECHANICAL MEANS TO RESIST A HORIZONTAL FORCE EQUAL TO THE WEIGHT OF THE COMPONENT. SCREWS OR APPROVED FASTENERS ARE REQUIRED. A MINIMUM OF TWO ATTACHMENTS ARE REQUIRED AT EACH COMPONENT.
   B. CEILING- MOUNTED AIR TERMINALS OR OTHER SERVICES WEIGHING LESS THAN OR EQUAL TO 20 LB. SHALL HAVE ONE (1) #12 GAGE SLACK SAFETY WIRE ATTACHED FROM THE TERMINAL OR SERVICE TO THE STRUCTURE ABOVE.
   C. FLEXIBLE SPRINKLER HOSE FITTINGS, CEILING-MOUNTED AIR TERMINALS OR OTHER SERVICES WEIGHING MORE THAN 20 LB. BUT LESS THAN OR EQUAL TO 56 LB. SHALL HAVE TWO (2) #12 GAGE SLACK SAFETY WIRES (AT DIAGONAL CORNERS) CONNECTED FROM THE TERMINAL OR SERVICE TO THE STRUCTURE ABOVE.
   D. FLEXIBLE SPRINKLER HOSE FITTINGS, CEILING-MOUNTED AIR TERMINALS OR OTHER SERVICES WEIGHING MORE THAN 56 LB. SHALL BE INDEPENDENTLY SUPPORTED DIRECTLY FROM THE STRUCTURE ABOVE BY NOT LESS THAN FOUR (4) TAUT #12 GAGE HANGER WIRES ATTACHED FROM THE TERMINAL OR SERVICE TO THE STRUCTURE ABOVE OR OTHER APPROVED HANGERS.

8. **OTHER DEVICES WITHIN THE CEILING:**
   A. MISCELLANEOUS LIGHTWEIGHT DEVICES, WEIGHING 20 POUNDS OR LESS, SUCH AS STROBE LIGHTS, OCCUPANCY SENSORS, SPEAKERS, EXIT SIGNS, ETC., SHALL BE ATTACHED TO THE CEILING GRID. IN ADDITION, DEVICES WEIGHING MORE THAN 10 LBS. SHALL HAVE ONE #12 GAGE SLACK SAFETY WIRE ANCHORED TO THE STRUCTURE ABOVE. DEVICES WEIGHING MORE THAN 20 POUNDS SHALL BE INDEPENDANTLY SUPPORTED FROM THE STRUCTURE ABOVE.

METAL SUSPENSION SYSTEMS FOR LAY-IN PANEL CEILING: 2022 CBC (Basis Document IR 25-2.19 rev 11/3/23)

1. **LATERAL FORCE BRACING ASSEMBLY INSTALLATION**:
   A. LATERAL FORCE BRACING ASSEMBLIES CONSISTING OF A COMPRESSION STRUT AND FOUR (4) #12 GAUGE SPLAYED BRACING WIRES ORIENTED 90 DEGREES (IN PLAN) FROM EACH OTHER ARE REQUIRED FOR ALL CEILING AREAS.
   EXCEPTION: LATERAL FORCE BRACING MAY BE OMITTED FOR SUSPENDED CEILING SYSTEMS WITH AN AREA OF 144 SQUARE FEET OR LESS, WHEN LATERAL RESTRAIN IS PROVIDED AT ALL PERIMETER WALLS IN ACCORDANCE WITH CBC SECTION 1617A.1.21, ITEM #4 AND ASCE 7 SECTION 13.5.6, EXCEPTION 1.
   B. LATERAL FORCE BRACING ASSEMBLIES SHALL BE SPACED PER TABLE 1 FOR ALL VALUES OF THE COMPONENT IMPORTANCE FACTOR (ip) OF THE CEILING.
   C. THERE SHALL BE A BRACE ASSEMBLY A DISTANCE OF NOT MORE THAN ONE-HALF (1/2) OF THE ABOVE SPACING FROM EACH SURROUNDING WALL, EXPANSION JOINT, AND CEILING EDGE AT ANY VERTICAL OFFSET. FOR EXAMPLE, WHERE THE BRACE SPACING IS 8' X 12', THE EDGE DISTANCE SHALL BE 4 FEET IN THE DIRECTION OF THE 8 FOOT SPACING AND 6 FEET IN THE DIRECTION OF THE 12 FOOT SPACING.
   D. THE SLOPE OF BRACING WIRES SHALL NOT EXCEED 45 DEGREES FROM THE HORIZONTAL PLANE AND WIRES SHALL BE TAUT. SPLICES IN BRACING WIRES SHALL DEVELOP THE WIRE ALLOWABLE LOAD. ONLY ONE SPLICE IS PERMITTED IN THE ENTIRE LENGTH OF A SINGLE BRACE WIRE.
   E. COMPRESSION STRUTS SHALL MEET THE FOLLOWING REQUIREMENTS:
      - THE STRUT SHALL BE SIZED TO ADEQUATELY RESIST THE VERTICAL COMPONENT OF THE CEILING BRACE FORCE IN COMBINATION WITH THE VERTICAL SEISMIC FORCE PRESCRIBED BY ASCE 7 SECTION 13.3.1.2 AND HAVE A MAXIMUM SLENDERNESS RATIO (KLR) NOT TO EXCEED 300. THE STRUT SIZES AND MAXIMUM LENGTHS LISTED IN APPENDIX A DETAIL 3.21
      - THE STRUT SHALL BE NOT MORE THAN ONE (HORIZONTAL) IN SIX (VERTICAL) OUT OF PLUMB.
      - SEPARATE COMPRESSION STRUTS AT LEAST 6 INCHES FROM ALL UNBRACED DUCTS, PIPES, CONDUIT, ETC.
      - CHANGES IN THE CEILING PLANE ELEVATION SHALL HAVE INDEPENDENT POSITIVE BRACING SYSTEMS FOR LATERAL MOVEMENT AND SEISMIC LOADS.
      - CEILING SECTIONS IN DIFFERENT PLANES OR AT DIFFERENT ELEVATIONS SHALL HAVE INDEPENDENT POSITIVE BRACING SYSTEMS TO RESIST LATERAL MOVEMENT AND SEISMIC LOADS PER ASTM E580 SECTION 5.2.8.6.

TABLE 1
LATERAL FORCE BRACE ASSEMBLY SPACING

Design Spectral Acceleration Parameter, S_{DS}	Brace Assembly Spacing (ft.)	
	z/h ≤ 0.5 [a]	z/h > 0.5 [a,b]
S_{DS} ≤ 1.15	12 x 12	12 x 12
1.15 < S_{DS}≤ 1.73	12 x 12	8 x 12
S_{DS} > 1.73	8 x 12	8 x 8

S_{DS} = 1.331, z/h = 1, THEREFORE 8 x 8 GRID

FOOTNOTES:
A. WHERE, AS DEFINED IN ASCE 7, SECTION 13.3.1:
   Z = HEIGHT IN STRUCTURE OF POINT OF ATTACHMENT OF CEILING WITH RESPECT TO THE BASE.
   H = AVERAGE ROOF HEIGHT OF THE STRUCTURE WITH RESPECT TO THE BASE.
B. IT SHALL BE PERMITTED TO USE THE BRACE ASSEMBLY SPACING FOR "Z/H > 0.5" FOR THE FULL BUILDING HEIGHT.

TABLE 4A

EMT COMPRESSION STRUT	MAX. LENGTH
1/2" DIAMETER EMT (0.042" WALL THICKNESS)	3'-11"
3/4" DIAMETER EMT (0.049" WALL THICKNESS)	6'-4"
1" DIAMETER EMT (0.057" WALL THICKNESS)	9'-9"
1 1/4" DIAMETER EMT (0.065" WALL THICKNESS)	12'-9"
1 1/2" DIAMETER EMT (0.065" WALL THICKNESS)	14'-9"
2" DIAMETER EMT (0.065" WALL THICKNESS)	18'-10"

TABLE 7A

CHANNEL COMPRESSION STRUT	MAX. LENGTH
250S125-33	5'-10"
250S137-33	6'-10"
362S137-33	8'-0"
250137-43	8'-10"
400S137-43	10'-10"

CONNECTION SCHEDULE

ITEM	TOP CONNECTION	BOTTOM CONNECTION
HANGER WIRE	11/A506, 12/A506, 15/1506	2/A506, 4/A506, 11/ A506
BRACE WIRES	11/A506, 6/A507	7/A506, 8/A506, 11/A506
EMT STRUT	5/A507, 33A/S022	8/A506
CHANNEL STRUT	5/A507, 33A/S022	7/A506

CEILING NOTES AND TABLES | 1 1/2" = 1'-0" | 1

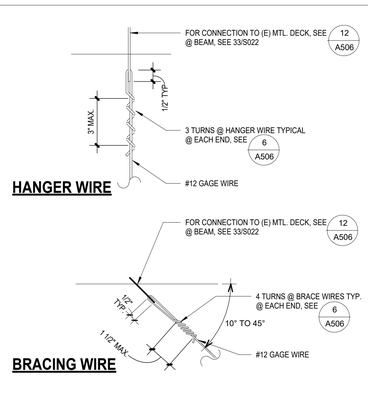

HANGER & BRACING WIRE CONN. TYP. WIRE TURNS | 3" = 1'-0" | 11

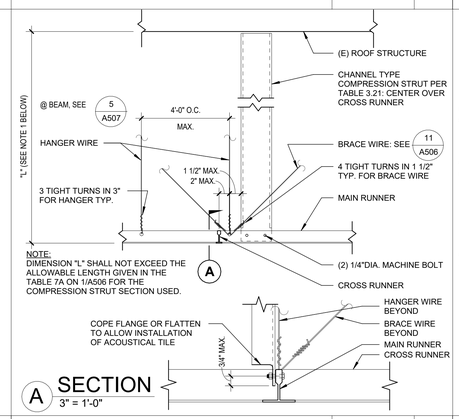

CHANNEL TYPE STRUT | 1 1/2" = 1'-0" | 7

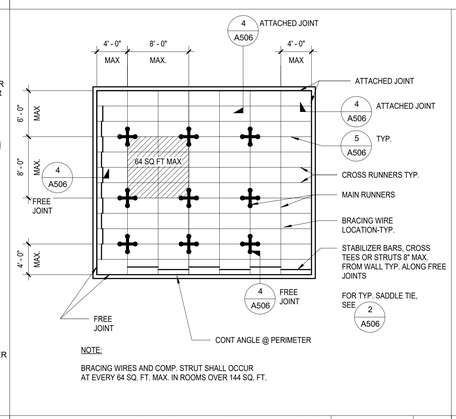

NOTE:
BRACING WIRES AND COMP. STRUT SHALL OCCUR AT EVERY 64 SQ. FT. MAX. IN ROOMS OVER 144 SQ. FT.

TYPICAL CEILING PLAN FOR 8' X 8' BRACE ASSEMBLY SPACING | 1/8" = 1'-0" | 3

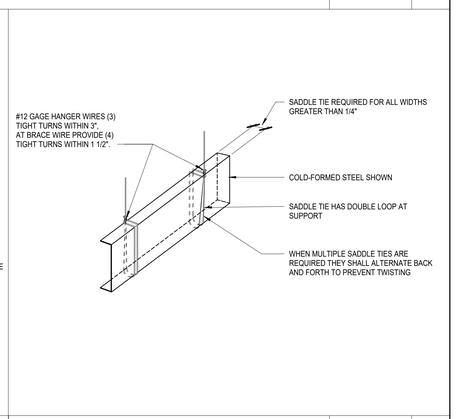

TYPICAL SADDLE TIE | 3" = 1'-0" | 2

DIVISION OF THE STATE ARCHITECT

IDENTIFICATION STAMP
DIV. OF THE STATE ARCHITECT
APP: 03-123218 INC:
REVIEWED FOR
SS ☑ FLS ☑ ACS ☑
DATE: 07/11/2024

MOORPARK COLLEGE

7075 CAMPUS RD
MOORPARK, CA 93021
TEL: (805) 378 - 1400

PROJECT TITLE AND SCHOOL LOCATION

ADMINISTRATION BUILDING SEISMIC REHABILITATION AND RENOVATION
7075 CAMPUS ROAD
MOORPARK, CA 91320

COMMISSIONED ARCHITECT

AMADOR

amador whittle architects, inc.
28328 AGOURA RD, 203 | AGOURA HILLS CA. 91301 | 805-558-4334

CONSULTANT

STAMPS/SEALS

LICENSED ARCHITECT
JEAN ANN AMADOR
C-22205
APRIL 30, 2025
DATE
STATE OF CALIFORNIA

1/9/24	DSA V2
8/23/23	DSA V1

SHEET TITLE:

CEILING NOTES & DETAILS

PROJECT NO: 21-MPC-040 | PROJECT ARCH:
DRAWN: GW | CHECKED:
SHEET NUMBER:

A506

DATE: 1/9/24 | SHEET: ___ OF ___

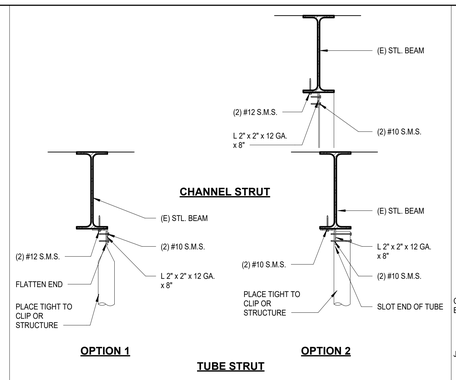

CHANNEL STRUT (TOP CONNECTION) | 1 1/2" = 1'-0" | 5

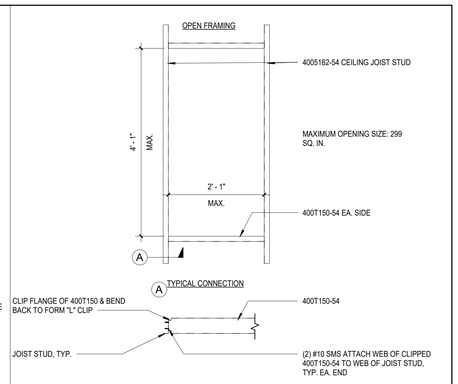

GYP. BOARD CEILING FRAMING @ OPENING | 3/4" = 1'-0" | 1

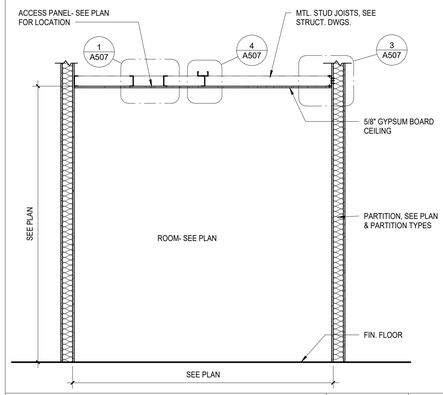

CROSS SECTION AT GYP. BD. CEILING | 1/2" = 1'-0" | 2

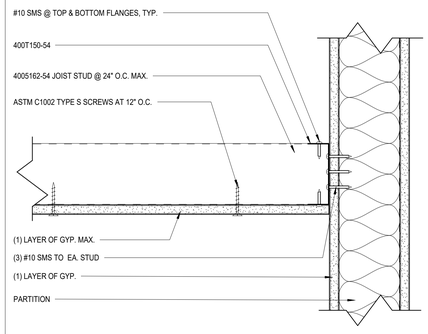

GYP. BOARD CEILING AT WALL | 3" = 1'-0" | 3

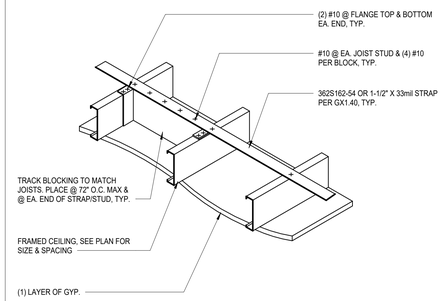

GYP. BD. CEILING - FINISH ONE SIDE ONLY | 1 1/2" = 1'-0" | 4

DIVISION OF THE STATE ARCHITECT

IDENTIFICATION STAMP
DIV. OF THE STATE ARCHITECT
APP: 03-123218 INC:
REVIEWED FOR
SS ☑ FLS ☑ ACS ☑
DATE: 07/11/2024

MOORPARK COLLEGE

7075 CAMPUS RD
MOORPARK, CA 93021
TEL: (805) 378 - 1400

PROJECT TITLE AND SCHOOL LOCATION

ADMINISTRATION BUILDING SEISMIC REHABILITATION AND RENOVATION

7075 CAMPUS ROAD
MOORPARK, CA 91320

COMMISSIONED ARCHITECT

AMADOR

amador whittle architects, inc.
28328 AGOURA RD, 203 | AGOURA HILLS CA, 91301 | 805-558-4334

CONSULTANT

STAMPS/SEALS

LICENSED ARCHITECT
BEAN ANN AMADOR
C-22205
APRIL 30, 2025
DATE
STATE OF CALIFORNIA

△		
△		
△		
△		
	1/9/24	DSA V2
	8/23/23	DSA V1

SHEET TITLE:

CEILING DETAILS

PROJECT NO: 21-MPC-040
PROJECT ARCH:
DRAWN: GW
CHECKED:
SHEET NUMBER:

A507

DATE: 1/9/24
SHEET: ___ OF ___

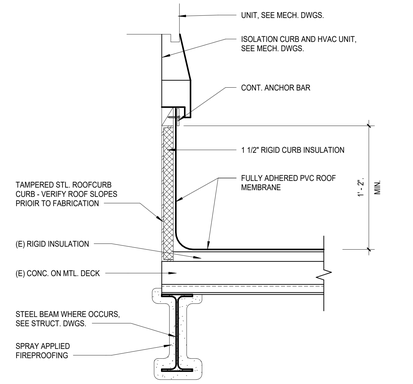

MECH. UNIT CURB | 1 1/2" = 1'-0" | 4

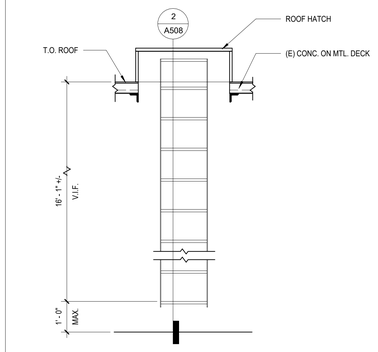

ROOF ACCESS LADDER ELEVATION | 1/2" = 1'-0" | 1

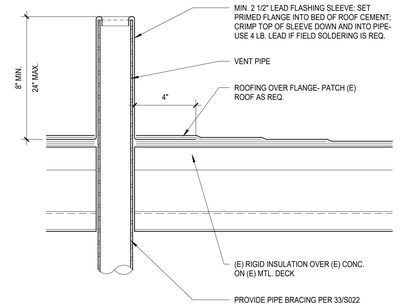

VENT PIPE FLASHING | 3" = 1'-0" | 5

NOTES:
1. LADDER TO BE PRIMED AND PAINTED.
2. MEET ALL DSA REQUIREMENTS. SUBMIT SHOP DWGS. PRIOR TO FABRICATION.
3. SECURE TO WALL W/ #14 SMS.
4. ALL WELDS SHALL BE GROUND SMOOTH.

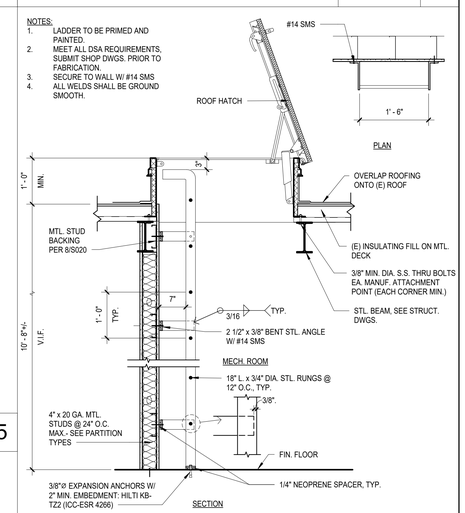

ROOF ACCESS LADDER | 3/4" = 1'-0" | 2

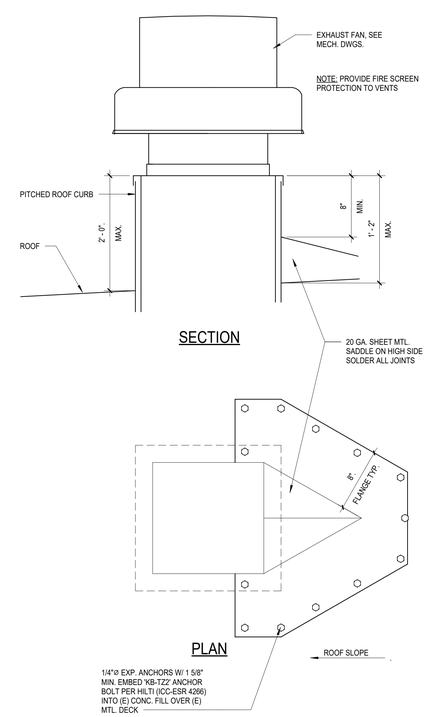

EXHAUST FAN | 1 1/2" = 1'-0" | 3

DIVISION OF THE STATE ARCHITECT

IDENTIFICATION STAMP
DIV. OF THE STATE ARCHITECT
APP: 03-123218 INC:
REVIEWED FOR
SS ☑ FLS ☑ ACS ☑
DATE: 07/11/2024

MOORPARK COLLEGE

7075 CAMPUS RD
MOORPARK, CA 93021
TEL: (805) 378 - 1400

PROJECT TITLE AND SCHOOL LOCATION

ADMINISTRATION BUILDING SEISMIC REHABILITATION AND RENOVATION
7075 CAMPUS ROAD
MOORPARK, CA 91320

COMMISSIONED ARCHITECT

AMADOR

amador whittle architects, inc.
28328 AGOURA RD, 203 | AGOURA HILLS CA, 91301 | 805-558-4334

CONSULTANT

STAMPS/SEALS

LICENSED ARCHITECT
JEAN ANN AMADOR
C-22205
APRIL 30, 2025
DATE
STATE OF CALIFORNIA

1/9/24	DSA V2
8/23/23	DSA V1

SHEET TITLE:

ROOF DETAILS

PROJECT NO: 21-MPC-040
PROJECT ARCH:
DRAWN: GW
CHECKED:
SHEET NUMBER:

A508

DATE: 1/9/24
SHEET: ___ OF ___

WINDOW TYPES

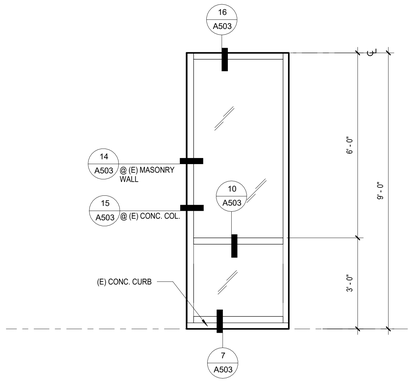

WINDOW TYPE (A)

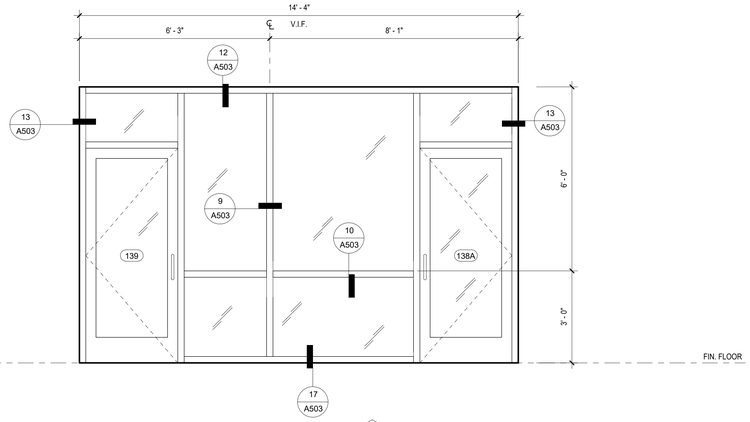

STOREFRONT TYPE (B)

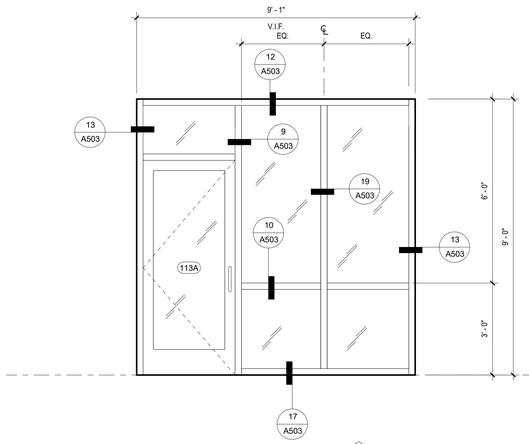

STOREFRONT TYPE (C)

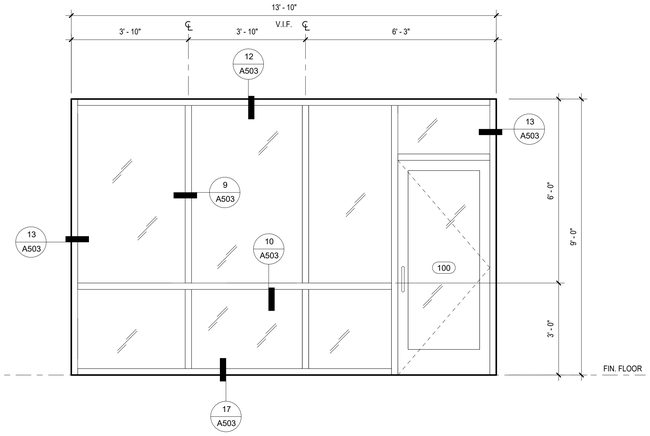

STOREFRONT TYPE (D)

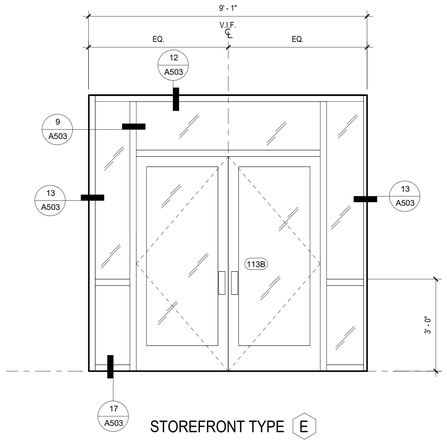

STOREFRONT TYPE (E)

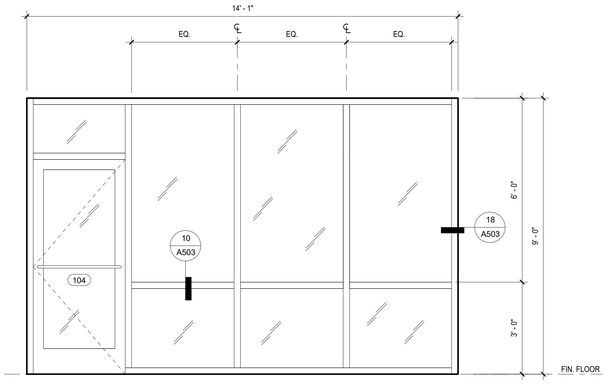

STOREFRONT TYPE (F)

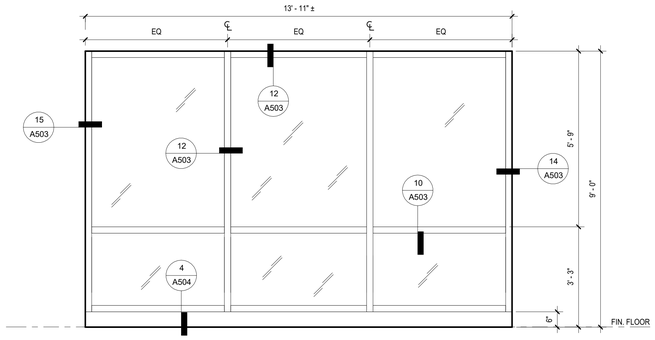

STOREFRONT TYPE (G)

WINDOW NOTES

STOREFRONT GLAZING SHALL CONSIST OF:
- ANODIZED ALUMINUM STOREFRONT WITH THERMAL BREAK FRAME
- 1" THICK INSULATED GLASS UNIT, LOW-E BY PPG
  - OUTER LITE: 1/4" SOLARBAN 70XL (2) OPTIGRAY (PALE GRAY TINT) - TEMPERED GLAZING
  - INNER LITE: 1/4" CLEAR (FOR OPAQUE GLAZING, USE 1/4" OBSCURE GLASS)
  - 47% VISIBLE LIGHT TRANSMITTANCE (VLT)
  - 0.26 U-VALUE (WINTER: 0.28)
  - 0.24 SOLAR HEAT GAIN COEFFICIENT (SHGC)

THE FOLLOWING PRODUCTS WERE USED AS THE BASIS FOR DESIGN. OTHER MANUFACTURERS WITH PRODUCT EQUAL IN QUALITY AND MEETING THE DESIGN INTENT ARE ACCEPTABLE.

STOREFRONT SYSTEM AND EXTERIOR WINDOWS:

1. ARCADIA TC470 SERIES (THERMAL) , 2 1/4" x 4 1/2" OFFSET GLAZED SYSTEM: FOR 1" GLASS, FINISH - CLEAR ANODIZED ALUMINUM

GLAZING IN THE FOLLOWING LOCATIONS SHALL BE OF SAFETY GLAZING MATERIAL IN ACCORDANCE WITH 2022 CBC, SECTION 2406.4:

1) GLAZING IN INGRESS AND EGRESS DOORS.
2) GLAZING IN FIXED OR OPERABLE PANELS ADJACENT TO A DOOR WHERE THE NEAREST EXPOSED EDGE OF THE GLAZING IS WITHIN 24 INCH ARC OF EITHER VERTICAL EDGE OF THE DOOR IN A CLOSED POSITION AND WHERE THE BOTTOM EXPOSED EDGE OF THE GLAZING IS LESS THAN 60 INCHES ABOVE THE WALKING SURFACE.
3) GLAZING IN AN INDIVIDUAL FIXED OR OPERABLE PANEL, OTHER THAN THOSE LOCATIONS DESCRIBED, THAT MEETS ALL OF THE FOLLOWING CONDITIONS:
   3.1 EXPOSED AREA OF AN INDIVIDUAL PANE GREATER THAN 9 SQ. FT.
   3.2 EXPOSED BOTTOM EDGE LESS THAN 18 INCHES ABOVE THE FLOOR.
   3.3 EXPOSED TOP EDGE GREATER THAN 36 INCHES ABOVE THE FLOOR.
   3.4 ONE OR MORE WALKING SURFACES WITHIN 36 INCHES HORIZONTALLY OF THE PLANE OF THE GLAZING.

1. VERIFY ALL DIMENSIONS IN FIELD.

2. GLASS SHALL BE FIRMLY SUPPORTED ON ALL FOUR EDGES UNLESS DETAILED CONSTRUCTION DOCUMENTS PREPARED BY A REGISTERED DESIGN PROFESSIONAL ARE SUBMITTED. CBC 2403.2

3. 708A.2.1 EXTERIOR WINDOWS AND EXTERIOR GLAZED DOOR ASSEMBLY REQUIREMENTS:

   1) GLAZING SHALL BE CONSTRUCTED OF MULITPANE GLAZING WITH A MINIMUM OF ONE TEMPERED PANE MEETING THE REQUIREMENTS OF SECTION 2406 SAFETY GLAZING

DOOR SCHEDULE

DOOR NUMBER	DOOR DIMENSION TYPE	WIDTH	HEIGHT	THICK	MAT'L	FINISH	FRAME MAT'L	FRAME FINISH	DETAILS (SHT. A503) HEAD	JAMB	THRESHOLD	HDW SET	FIRE RATING	PANIC HDW	REMARKS
100	C	3' - 0"	7' - 0"		ALUM	ANOD	ALUM	ANOD	11	4, 8	1	01		Yes	
101	B	3' - 0"	7' - 0"	1 3/4"	SC	PT	HM	PT	6	6	2	02		Yes	
102A	F	3' - 0"	7' - 0"	1 3/4"	HM	PT	(E)	PT	10/A504	9/A504	8/A504	01		Yes	
103	B	3' - 0"	7' - 0"	1 3/4"	SC	PT	HM	PT	6	6	-	03			
104	C	3' - 0"	7' - 0"		ALUM	ANOD	ALUM	ANOD	11	6, 8	-	04			
105	B	3' - 0"	7' - 0"	1 3/4"	SC	ANOD	HM	PT	6	6	2	05			
106	B	3' - 0"	7' - 0"	1 3/4"	SC	PT	HM	PT	6	6	-	03			
107	B	3' - 0"	7' - 0"	1 3/4"	SC	PT	HM	PT	6	6	-	03			
108	B	3' - 0"	7' - 0"	1 3/4"	SC	PT	HM	PT	6	6	-	03			
109A	B	3' - 0"	7' - 0"	1 3/4"	SC	PT	HM	PT	6	6	-	03			
109B	B	3' - 0"	7' - 0"	1 3/4"	SC	PT	HM	PT	6	6	-	03			
111A	D	4' - 0"	7' - 0"	1 3/4"	SC	PT	HM	PT	6	5	-	06			
111B	D	4' - 0"	7' - 0"	1 3/4"	SC	PT	HM	PT	6	5	-	06			
112A	D	4' - 0"	7' - 0"	1 3/4"	SC	PT	HM	PT	6	6	-	06			
112B	D	4' - 0"	7' - 0"	1 3/4"	SC	PT	HM	PT	6	6	-	06			
113A	C	3' - 0"	7' - 0"		ALUM	ANOD	ALUM	ANOD	11	4, 8	1	01		Yes	
113B	E	6' - 0"	7' - 0"		ALUM	ANOD	ALUM	ANOD	11	8	1	07		Yes	
114	A	3' - 0"	7' - 0"	1 3/4"	SC	PT	HM	PT	6	6	2	05			
115	A	3' - 0"	7' - 0"	1 3/4"	SC	PT	HM	PT	6	6	2	05			
116	A	3' - 0"	7' - 0"	1 3/4"	SC	PT	HM	PT	6	6	2	05			
117	A	3' - 0"	7' - 0"	1 3/4"	SC	PT	HM	PT	6	6	2	05			
118	A	3' - 0"	7' - 0"	1 3/4"	SC	PT	HM	PT	6	6	2	05			
119	A	3' - 0"	7' - 0"	1 3/4"	SC	PT	HM	PT	6	6	2	05			
120	A	3' - 0"	7' - 0"	1 3/4"	SC	PT	HM	PT	6	6	2	05			
121	A	3' - 0"	7' - 0"	1 3/4"	SC	PT	HM	PT	6	6	2	05			
122	A	3' - 0"	7' - 0"	1 3/4"	SC	PT	HM	PT	6	6	2	08			
123	A	3' - 0"	7' - 0"	1 3/4"	SC	PT	HM	PT	6	6	2	05			
124	B	3' - 0"	7' - 0"	1 3/4"	SC	PT	HM	PT	6	6	2	09			
124A	F	3' - 0"	7' - 0"	1 3/4"	HM	PT	(E)	PT	10/A504	9/A504	8/A504	01		Yes	
125		3' - 0"	7' - 0"		-	-	HM	PT			-	10			DOOR OPENING - NO DOOR
126	A	3' - 0"	7' - 0"	1 3/4"	SC	PT	HM	PT	6	6	3	11			
127	A	3' - 0"	7' - 0"	1 3/4"	SC	PT	HM	PT	6	6	2	05			
128	B	3' - 0"	7' - 0"	1 3/4"	SC	PT	HM	PT	6	6	2	05			
129	A	3' - 0"	7' - 0"	1 3/4"	SC	PT	HM	PT	6	6	2	05			
130A	B	3' - 0"	7' - 0"	1 3/4"	SC	PT	HM	PT	6	6	-	12			
130B	B	3' - 0"	7' - 0"	1 3/4"	SC	PT	HM	PT	6	6	2	13		Yes	
130C	B	3' - 0"	7' - 0"	1 3/4"	SC	PT	HM	PT	6	6	-	12			
131	A	3' - 0"	7' - 0"	1 3/4"	SC	PT	HM	PT	6	6	2	05			
132	A	3' - 0"	7' - 0"	1 3/4"	SC	PT	HM	PT	6	6	2	08			
133	A	3' - 0"	7' - 0"	1 3/4"	SC	PT	HM	PT	6	6	2	05			
134	A	3' - 0"	7' - 0"	1 3/4"	SC	PT	HM	PT	6	6	2	14			
135	A	3' - 0"	7' - 0"	1 3/4"	SC	PT	HM	PT	6	6	2	15			
136	A	3' - 0"	7' - 0"	1 3/4"	SC	PT	HM	PT	6	6	2	08			
138A	C	3' - 0"	7' - 0"		ALUM	ANOD	ALUM	ANOD	11	4, 8	1	01		Yes	
138B	B	3' - 0"	7' - 0"	1 3/4"	SC	PT	HM	PT	6	6	2	02		Yes	
139	C	3' - 0"	7' - 0"		ALUM	ANOD	ALUM	ANOD	11	4, 8	1	01		Yes	
140	B	3' - 0"	7' - 0"	1 3/4"	SC	PT	HM	PT	6	6	2	05			
141	B	3' - 0"	7' - 0"	1 3/4"	SC	PT	HM	PT	6	6	2	05			
142	B	3' - 0"	7' - 0"	1 3/4"	SC	PT	HM	PT	6	6	2	05			
143	B	3' - 0"	7' - 0"	1 3/4"	SC	PT	HM	PT	6	6	2	05			
144	B	3' - 0"	7' - 0"	1 3/4"	SC	PT	HM	PT	6	6	2	05			
145	B	3' - 0"	7' - 0"	1 3/4"	SC	PT	HM	PT	6	6	2	05			
145A	F	3' - 0"	7' - 0"	1 3/4"	HM	PT	(E)	PT	10/A504	9/A504	8/A504	01		Yes	
146	B	3' - 0"	7' - 0"	1 3/4"	SC	PT	HM	PT	6	6	2	05			
147	B	3' - 0"	7' - 0"	1 3/4"	SC	PT	HM	PT	6	6	2	05			
148	B	3' - 0"	7' - 0"	1 3/4"	SC	PT	HM	PT	6	6	2	05			
149	A	3' - 0"	7' - 0"	1 3/4"	SC	PT	HM	PT	6	6	3	16			
151	A	3' - 0"	7' - 0"	1 3/4"	SC	PT	HM	PT	6	6	3	16			
152	A	3' - 0"	7' - 0"	1 3/4"	SC	PT	HM	PT	6	6	2	17			
154	A	3' - 0"	7' - 0"	1 3/4"	SC	PT	HM	PT	6	6	2	18			
155	(E)	3' - 0"	7' - 0"	1 3/4"											(E) DOOR
156A	B	3' - 0"	7' - 0"	1 3/4"	SC	PT	HM	PT	6	6	2	02		Yes	
156B	B	3' - 0"	7' - 0"	1 3/4"	SC	PT	HM	PT	6	6	2	02		Yes	
157A	B	3' - 0"	7' - 0"	1 3/4"	SC	PT	HM	PT	6	6	2	09		Yes	
157B	B	3' - 0"	7' - 0"	1 3/4"	SC	PT	HM	PT	6	6	2	02		Yes	
157C	F	3' - 0"	7' - 0"	1 3/4"	HM	PT	(E)	PT	10/A504	9/A504	8/A504	20		Yes	
158	B	3' - 0"	7' - 0"	1 3/4"	SC	PT	HM	PT	6	6	2	05			
159	B	3' - 0"	7' - 0"	1 3/4"	SC	PT	HM	PT	6	6	2	09			
160	B	3' - 0"	7' - 0"	1 3/4"	SC	PT	HM	PT	6	6	2	05			
161	B	3' - 0"	7' - 0"	1 3/4"	SC	PT	HM	PT	6	6	2	05			
163	(E)	6' - 0"	7' - 0"	1 3/4"	(E)	(E)	(E)	(E)	(E)	(E)	(E)			Yes	PROVIDE PANIC HARDWARE & LOUVERS PER MECH.
164	B	3' - 0"	7' - 0"	1 3/4"	SC	PT	HM	PT	6	6	2	05			
165	B	3' - 0"	7' - 0"	1 3/4"	SC	PT	HM	PT	6	6	2	05			
166	B	3' - 0"	7' - 0"	1 3/4"	SC	PT	HM	PT	6	6	2	05			
167	B	3' - 0"	7' - 0"	1 3/4"	SC	PT	HM	PT	6	6	2	05			
168	B	3' - 0"	7' - 0"	1 3/4"	SC	PT	HM	PT	6	6	2	05			
169	B	3' - 0"	7' - 0"	1 3/4"	SC	PT	HM	PT	6	6	2	05			
170	B	3' - 0"	7' - 0"	1 3/4"	SC	PT	HM	PT	6	6	2	05			
171	B	3' - 0"	7' - 0"	1 3/4"	SC	PT	HM	PT	6	6	2	05			

DOOR TYPES

NOTE: DOOR DETAILS REFERENCED ON SHEET A503, U.N.O.

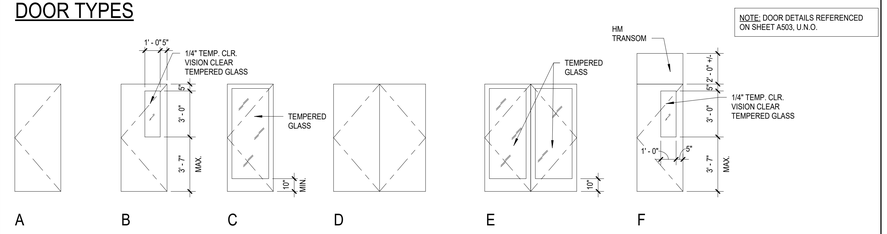

DOOR NOTES

1. THRESHOLDS, IF PROVIDED AT DOORWAYS, SHALL BE 1/2 INCH HIGH MAXIMUM. RAISED THRESHOLDS AND CHANGES IN LEVEL AT DOORWAYS SHALL COMPLY WITH SECTIONS 11B-302 AND 11B-303. C.B.C. 11B-404.2.5
2. DOORS WHERE INDICATED SHALL HAVE TEMPLATES FOR CARD KEY ACCESS CONTROL DEVICES.
3. GLAZING WITHIN 24" OF DOORWAY/GLAZING SHALL BE TEMPERED. C.B.C. 2406
4. FIRE RATED GLAZING IN DOORS AND SIDELIGHTS SHALL COMPLY WITH C.B.C. 716.5.8
5. FIRE DOOR ASSEMBLIES SHALL BE LABELED BY AN APPROVED AGENCY. THE LABELS SHALL COMPLY WITH NFPA 80, AND SHALL BE PERMANENTLY AFFIXED TO THE DOOR OR FRAME. C.B.C. 716.5.7
6. FIRE DOORS SHALL BE LABELED SHOWING THE NAME OF THE MANUFACTURER, THE NAME OF THE THIRD-PARTY INSPECTION AGENCY, THE FIRE PROTECTION RATING AND, WHERE REQUIRED FOR FIRE DOORS IN EXIT ENCLOSURES AND EXIT PASSAGEWAYS BY SECTION 716.5.5, THE MAXIMUM TRANSMITTED TEMPERATURE END POINT. SMOKE AND DRAFT CONTROL DOORS COMPLYING WITH UL 1784 SHALL BE LABELED AS SUCH. LABELS SHALL BE APPROVED AND PERMANENTLY AFFIXED. THE LABEL SHALL BE APPLIED AT THE FACTORY OR LOCATION WHERE FABRICATION AND ASSEMBLY ARE PERFORMED. C.B.C. 716.5.7.1. EXCEPTION: DOORS WHICH ARE REQUIRED TO BE 45 MINUTES OR HIGHER, SHALL BE FIRE-RATED ASSEMBLIES OR CERTIFIED BY THE MANUFACTURER AS BEING EQUIVALENT TO THE REQUIRED STANDARD.
7. SMOKE AND DRAFT CONTROL DOORS COMPLYING WITH UL 1784 SHALL BE LABELED IN ACCORDANCE WITH SECTION 716.5.7.1 AND SHALL SHOW THE LETTER "S" ON THE FIRE RATING LABEL OF THE DOOR. THIS MARKING SHALL INDICATE THAT THE DOOR AND FRAME ASSEMBLY ARE IN COMPLIANCE WHEN LISTED OR LABELED GASKETING IS ALSO INSTALLED. C.B.C. 716.5.7.3.
8. FIRE DOOR FRAMES SHALL BE LABELED SHOWING THE NAMES OF THE MANUFACTURER AND THE THIRD-PARTY INSPECTION AGENCY. C.B.C. 716.5.7.4
9. HANDLES, PULLS, LATCHES, LOCKS AND OTHER OPERABLE PARTS ON DOORS AND GATES SHALL COMPLY WITH SECTION 11B-309.4. OPERABLE PARTS OF HARDWARE SHALL BE 34 INCHES MINIMUM AND 44 INCHES MAXIMUM ABOVE THE FINISH FLOOR OR GROUND. WHERE SLIDING DOORS ARE IN THE FULLY OPEN POSITION, OPERATING HARDWARE SHALL BE EXPOSED AND USABLE FROM BOTH SIDES. C.B.C. 11B-404.2.7
10. THE FORCE FOR PUSHING OR PULLING OPEN A DOOR OR GATE ARE AS FOLLOWS:
    1. INTERIOR HINGED DOORS AND GATES: 5 POUNDS MAXIMUM.
    2. SLIDING OR FOLDING DOORS: 5 POUNDS MAXIMUM.
    3. REQUIRED FIRE DOORS: THE MINIMUM OPENING FORCE ALLOWABLE BY THE APPROPRIATE ADMINISTRATIVE AUTHORITY, NOT TO EXCEED 15 POUNDS.
    4. EXTERIOR HINGED DOORS: 5 POUNDS MAXIMUM.
11. ALL INTERIOR S.C. WOOD DOORS SHALL HAVE PLASTIC LAMINATE FINISH.
12. DOOR HANDLES, PULLS, LATCHES, LOCKS AND OTHER OPERATING DEVICES SHALL BE INSTALLED 34" MINIMUM AND 48" MAXIMUM ABOVE THE FINISHED FLOOR. LOCKS USED ONLY FOR SECURITY PURPOSES AND NOT USED FOR NORMAL OPERATION ARE PERMITTED AT ANY HEIGHT. CBC SECTION1010.1.9.1
13. LOCKS AND LATCHES SHALL BE PERMITTED TO PREVENT OPERATION OF DOORS WHERE ANY OF THE FOLLOWING EXIST:
    1. PLACES OF DETENTION OR RESTRAINT.
    2. IN BUILDINGS IN OCCUPANCY GROUP-A HAVING AN OCCUPANT LOAD OF 300 OR LESS, GROUP B, F, M AND S, AND IN PLACES OF RELIGIOUS WORSHIP. THE MAIN EXTERIOR DOOR OR DOORS ARE PERMITTED TO BE EQUIPPED WITH KEY-OPERATED LOCKING DEVICES FROM THE EGRESS SIDE PROVIDED:
    3. THE LOCKING DEVICE IS READILY DISTINGUISHABLE AS LOCKED.
    4. A READILY VISIBLE DURABLE SIGN IS POSTED ON THE EGRESS SIDE ON OR ADJACENT TO THE DOOR STATING: THIS DOOR TO REMAIN UNLOCKED WHEN THE BUILDING IS OCCUPIED. THE SIGN SHALL BE IN LETTERS 1 INCH HIGH ON A CONTRASTING BACKGROUND,
    5. THE USE OF THE KEY-OPERATED DEVICE IS REVOKABLE BY THE BUILDING OFFICIAL FOR DUE CAUSE. CBC 1010.1.9.3
14. SWINGING DOOR AND GATE SURFACES WITHIN 10 INCHES OF THE FINISH FLOOR OR GROUND MEASURED VERTICALLY SHALL HAVE A SMOOTH SURFACE ON THE PUSH SIDE EXTENDING THE FULL WIDTH OF THE DOOR OR GATE. PARTS CREATING HORIZONTAL OR VERTICAL JOINTS IN THESE SURFACES SHALL BE WITHIN 1/16 INCH OF THE SAME PLANE AS THE OTHER AND BE FREE OF SHARP OR ABRASIVE EDGES. CAVITIES CREATED BY ADDED KICK PLATES SHALL BE CAPPED. CBC 11B-404.2.10
15. PIVOT OR SIDE-HINGED SWINGING DOORS SHALL SWING IN THE DIRECTION OF EGRESS TRAVEL WHERE SERVING A ROOM OR AREA CONTAINING AN OCCUPANT LOAD OF 50 OR MORE PERSONS OR A GROUP H OCCUPANCY. CBC 1010.1.2.1
16. LOCKING ARRANGEMENTS IN EDUCATIONAL OCCUPANCIES: IN GROUP B OCCUPANCIES, EGRESS DOORS FROM OFFICES AND OTHER OCCUPIED ROOMS WITH LOCKING ARRANGEMENTS DESIGNED TO KEEP INTRUDERS FROM ENTERING THE ROOM SHALL COMPLY WITH ALL OF THE FOLLOWING CONDITIONS:
    1. THE DOOR SHALL BE CAPABLE OF BEING UNLOCKED FROM OUTSIDE THE ROOM WITH A KEY OR OTHER APPROVED MEANS.
    2. THE DOOR SHALL BE OPENABLE FROM WITHIN THE ROOM IN ACCORDANCE WITH SECTION 1010.2.
    3. MODIFICATIONS SHALL NOT BE MADE TO LISTED PANIC HARDWARE, FIRE DOOR HARDWARE OR DOOR CLOSERS.
    4. MODIFICATIONS TO FIRE DOOR ASSEMBLIES SHALL BE IN ACCORDANCE WITH NFPA 80.
    REMOTE LOCKING OR UNLOCKING OF DOORS FROM AN APPROVED LOCATION SHALL BE PERMITTED IN ADDITION TO THE UNLOCKING OPERATION IN ITEM 1.

DIVISION OF THE STATE ARCHITECT

IDENTIFICATION STAMP
DIV. OF THE STATE ARCHITECT
APP: 03-123218 INC:
REVIEWED FOR
SS ☑ FLS ☑ ACS ☑
DATE: 07/11/2024

MOORPARK COLLEGE

7075 CAMPUS RD
MOORPARK, CA 93021
TEL: (805) 378 - 1400

PROJECT TITLE AND SCHOOL LOCATION

ADMINISTRATION BUILDING SEISMIC REHABILITATION AND RENOVATION
7075 CAMPUS ROAD
MOORPARK, CA 91320

COMMISSIONED ARCHITECT

AMADOR

amador whittle architects, inc.
28328 AGOURA RD, 203 | AGOURA HILLS CA. 91301 | 805-558-4334

CONSULTANT

STAMPS/SEALS

LICENSED ARCHITECT
BEAM ANN AMADOR
C-22205
APRIL 30, 2025
DATE
STATE OF CALIFORNIA

1/9/24	DSA V2
8/23/23	DSA V1

SHEET TITLE:

DOOR & WINDOW SCHEDULES

PROJECT NO: 21-MPC-040
PROJECT ARCH:
DRAWN: GW
CHECKED:
SHEET NUMBER:

A601

DATE: 1/9/24
SHEET: ____ OF ____

MATERIALS LIST

PT 2

MARK	MATERIAL	MANUFACTURER	STYLE	COLOR	REMARKS
ACT-1	2' x 2' ACOUSTIC TILE CIELING	ARMSTRONG	ULTIMA HIGH NRC, 1942 BEVELED TEGULAR	WHITE	
B-1	RUBBER BASE	ROPPE	PINNACLE STANDARD TOE BASE	123 CHARCOAL	
B-2	CERAMIC TILE BASE	DALTILE	6" HIGH QUARRY TILE	RED BLAZE 0Q40	
B-3	CERAMIC TILE BASE	DALTILE	6" HIGH FARRIER	CREMELLO FA55	
CPT-1	CARPET	INTERFACE	Open End #131400 AKOO	103177 Gulf & 103179 Lapis	
CPT-2	4'-0" WIDE INTERIOR WALK OFF MAT	INTERFACE	FLOR STEP REPEAT COLLECTION GLASBAC WALK OFF TILE		
CT-1	CERAMIC TILE	DALTILE	24" x 24" OUTLANDER	MOONLIGHT 0446	SLIP RESISTANT
CT-2	CERAMIC TILE	DALTILE			
CT-3	CERAMIC TILE	DALTILE	5" x 5" FARRIER	CREMELLO FA55	
CT-4	CERAMIC TILE	DALTILE	6" x 6" QUARRY TILE	RED BLAZE 0Q40	
EX	EXISTING MATERIAL TO REMAIN				
FRP-1	FIBERGLASS REINFORCED PANELS	MARLITE	SMOOTH	WHITE S 100 S/2/S	4'-0" HIGH AT MOP SINK WALLS
PL-1	PLASTIC LAMINATE	WILSONART	STANDARD LAMINATE, MATTE FINISH	INDIGO D397-60	
PL-2					
PL-3					
PT-1	PAINT	TBD			
PT-2	PAINT	TBD			
PT-3					
PT-4					
ST-1	RESTROOM COUNTERTOP	BRADLEY	OMNIDECK WITH WASHBAR 5010 SERIES	ALPINE WHITE	
TP-1	TOILET PARTITIONS	BRADLEY	SOLID PLASTIC PRIVACY SCREENS		
VCT-1	VINYL TILE -LUXURY VINYL PLANK	INTERFACE	25cm X 1m x 4.5 mm thick	NATURAL SATIN A02610	
VCT-2	VINYL TILE -LUXURY VINYL PLANK	INTERFACE	25cm X 1m x 4.5 mm thick	DARK SATIN A02612	ANTI-STATIC
VCT-3	VINYL TILE	ROPPE	ESD STATIC CONTROL RUBBER TILE	TIERRA F407	

FINISH SCHEDULE

ROOM NO.	ROOM NAME	FLOOR FINISH	BASE FINISH	WALL FINISH	CEILING FINISH
100	HALLWAY	VCT-2	B-1	PT-1	ACT-1
101	WAITING	VCT-2	B-1	PT-1	ACT-1
102	EXECUTIVE SUITES / OPEN OFFICE	CPT-1/ VCT-2	B-1	PT-1	ACT-1
102A	HALLWAY	VCT-2	B-1	PT-1	ACT-1
103	DIRECTOR OF COMMUNICATIONS	CPT-1	B-1	PT-1	ACT-1
104	VICE PRESIDENT	CPT-1	B-1	PT-1	ACT-1
105	BREAK ROOM	VCT-1	B-1	PT-1	ACT-1
106	PRESIDENT	CPT-1	B-1	PT-1	ACT-1
107	VICE PRESIDENT	CPT-1	B-1	PT-1	ACT-1
108	VICE PRESIDENT	CPT-1	B-1	PT-1	ACT-1
109	CONFERENCE	CPT-1	B-1	PT-1	ACT-1
110	WAITING	VCT-2	B-1	PT-1	ACT-1
111	CLO.	VCT-2	B-1	PT-1	PT-1
112A	CLO.	VCT-2	B-1	PT-1	PT-1
112B	CLO.	VCT-2	B-1	PT-1	PT-1
113	HALLWAY	VCT-2	B-1	PT-1	ACT-1
114	MENTAL HEALTH	CPT-1	B-1	PT-1	ACT-1
115	MENTAL HEALTH	CPT-1	B-1	PT-1	ACT-1
116	MENTAL HEALTH	CPT-1	B-1	PT-1	ACT-1
117	MENTAL HEALTH	CPT-1	B-1	PT-1	ACT-1
118	EXAM	VCT-1	B-1	PT-1	ACT-1
119	EXAM	VCT-1	B-1	PT-1	ACT-1
120	EXAM	VCT-1	B-1	PT-1	ACT-1
121	EXAM	VCT-1	B-1	PT-1	ACT-1
122	STOR.	VCT-1	B-1	PT-1	PT-1
123	HEALTH COORDINATOR OFFICE	CPT-1	B-1	PT-1	ACT-1
124	HEALTH WAITING	VCT-1	B-1	PT-1	ACT-1
125	VEST.	VCT-1	B-1	PT-1	ACT-1
126	ALL GENDER RESTROOM	CT-2	B-3	PT-1	PT-1
127	ASST. OFFICE	VCT-1	B-1	PT-1	ACT-1
128	WORKROOM	VCT-1	B-1	PT-1	ACT-1
129	SHARED OFFICE	CPT-1	B-1	PT-1	ACT-1
130	HALLWAY	VCT-2	B-1	PT-1	ACT-1
131	HEALTH ED. OFFICE	CPT-1	B-1	PT-1	ACT-1
132	MEDICAL STORAGE	VCT-2	B-1	PT-1	PT-1
133	GENERAL SUPPORT OFFICE	CPT-1	B-1	PT-1	ACT-1
134	STORAGE	VCT-2	B-1	PT-1	PT-1
135	LACTATION ROOM	VCT-2	B-1	PT-1	ACT-1
136	STORAGE	VCT-2	B-1	PT-1	ACT-1
137	RECEPTION	VCT-2	B-1	PT-1	ACT-1
138	GENERAL WAITING	VCT-2	B-1	PT-1	ACT-1
139	HALLWAY	VCT-2	B-1	PT-1	ACT-1
140	GEN ASSGN	CPT-1	B-1	PT-1	ACT-1
141	GEN ASSGN	CPT-1	B-1	PT-1	ACT-1
142	GEN ASSGN	CPT-1	B-1	PT-1	ACT-1
143	GEN ASSGN	CPT-1	B-1	PT-1	ACT-1
144	GEN ASSGN	CPT-1	B-1	PT-1	ACT-1
145	CONFERENCE ROOM	CPT-1	B-1	PT-1	ACT-1
146	GEN ASSGN	CPT-1	B-1	PT-1	ACT-1
147	GEN ASSGN	CPT-1	B-1	PT-1	ACT-1
148	GEN ASSGN	CPT-1	B-1	PT-1	ACT-1
149	MENS RESTROOM	CT-1	B-2	PT/CT-1	PT-1
150	VEST.	VCT-2	B-1	PT-1	PT-1
151	WOMENS RESTROOM	CT-1	B-2	PT/CT-1	PT-1
152	JAN. CLO.	VCT-1	B-1	PT-1/FRP-1	EXIST
153	VEST.	VCT-2	B-1	PT-1	PT-1
154	TEL./ I.T.	VCT-3	B-1	PT-1	EXIST
155	MECHANICAL	EXIST	NONE	PT-1	EXIST
156	LOUNGE	VCT-1	B-1	PT-1	ACT-1
157	HALLWAY	VCT-2	B-1	PT-1	ACT-1
158	GEN ASSGN	CPT-1	B-1	PT-1	ACT-1
159	MAIL ROOM	VCT-2	B-1	PT-1	ACT-1
160	GEN ASSGN	CPT-1	B-1	PT-1	ACT-1
161	GEN ASSGN	CPT-1	B-1	PT-1	ACT-1
162	MPOE	EXIST	EXIST	EXIST	ACT-1
163	ELECTRICAL	EXIST	EXIST	EXIST	EXIST
164	GEN ASSGN	CPT-1	B-1	PT-1	ACT-1
165	GEN ASSGN	CPT-1	B-1	PT-1	ACT-1
166	GEN ASSGN	CPT-1	B-1	PT-1	ACT-1
167	GEN ASSGN	CPT-1	B-1	PT-1	ACT-1
168	GEN ASSGN	CPT-1	B-1	PT-1	ACT-1
169	GEN ASSGN	CPT-1	B-1	PT-1	ACT-1
170	GEN ASSGN	CPT-1	B-1	PT-1	ACT-1
171	GEN ASSGN	CPT-1	B-1	PT-1	ACT-1
172	GEN ASSGN	CPT-1	B-1	PT-1	ACT-1
173	GEN ASSGN	CPT-1	B-1	PT-1	ACT-1
174	HALLWAY	VCT-2	B-1	PT-1	ACT-1

FLOOR FINISH LEGEND

- VINYL TILE
- CERAMIC TILE
- CARPET TILES
- EXPOSED CONCRETE
- INTERIOR WALK OFF MAT

FLOOR FINISH PLAN 1/8" = 1'-0" 1

DIVISION OF THE STATE ARCHITECT

IDENTIFICATION STAMP
DIV. OF THE STATE ARCHITECT
APP: 03-123218 INC:
REVIEWED FOR
SS ☑ FLS ☑ ACS ☑
DATE: 07/11/2024

MOORPARK COLLEGE

7075 CAMPUS RD
MOORPARK, CA 93021
TEL: (805) 378 - 1400

PROJECT TITLE AND SCHOOL LOCATION

ADMINISTRATION BUILDING SEISMIC REHABILITATION AND RENOVATION

7075 CAMPUS ROAD
MOORPARK, CA 91320

COMMISSIONED ARCHITECT

AMADOR

amador whittle architects, inc.
28328 AGOURA RD, 203 | AGOURA HILLS CA, 91301 | 805-558-4334

CONSULTANT

STAMPS/SEALS

LICENSED ARCHITECT JEAN ANN AMADOR C-22205 APRIL 30, 2025 DATE STATE OF CALIFORNIA

1/9/24	DSA V2
8/23/23	DSA V1

SHEET TITLE:

FINISH SCHEDULE & FLOOR FINISH PLAN

PROJECT NO. 21-MPC-040 | PROJECT ARCH:
DRAWN: GW | CHECKED:
SHEET NUMBER:

A602

DATE: 1/9/24 | SHEET: ___ OF ___

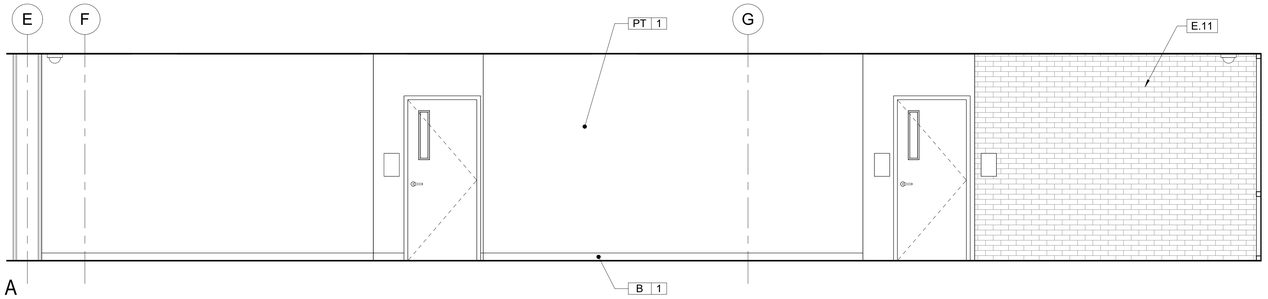

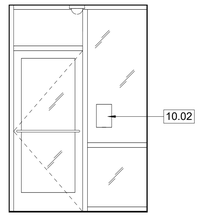

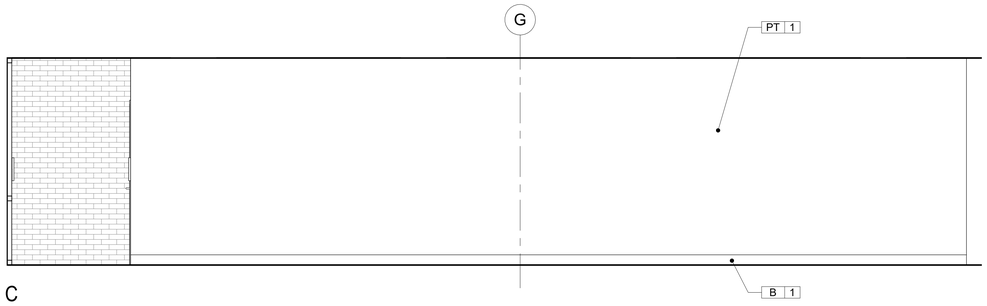

HALLWAY 100 ELEVATIONS | 3/8" = 1'-0" | 1

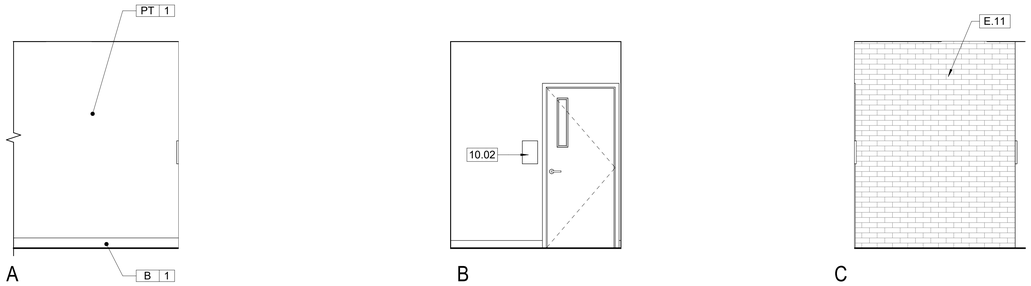

WAITING 101 ELEVATIONS | 3/8" = 1'-0" | 2

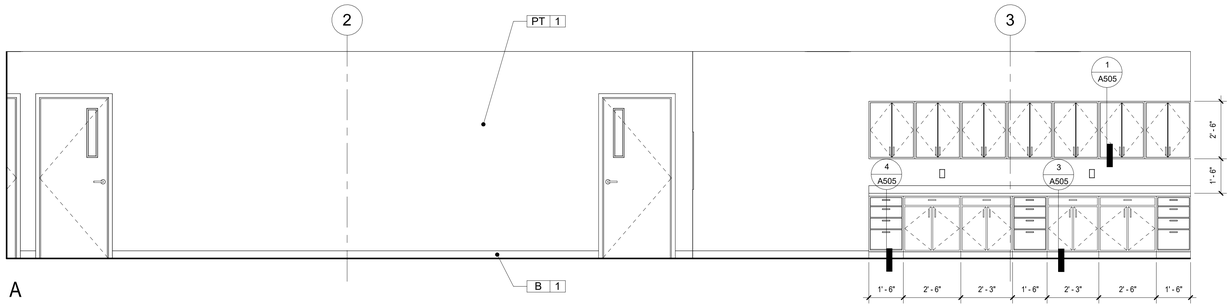

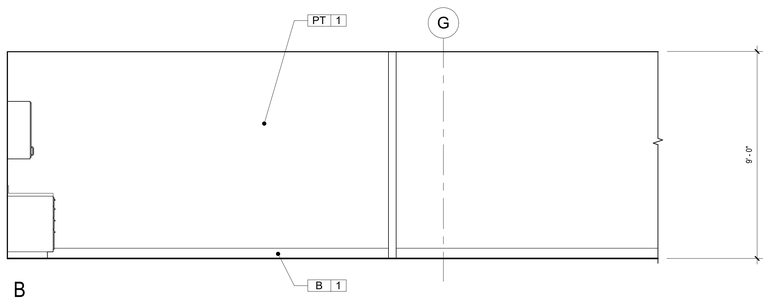

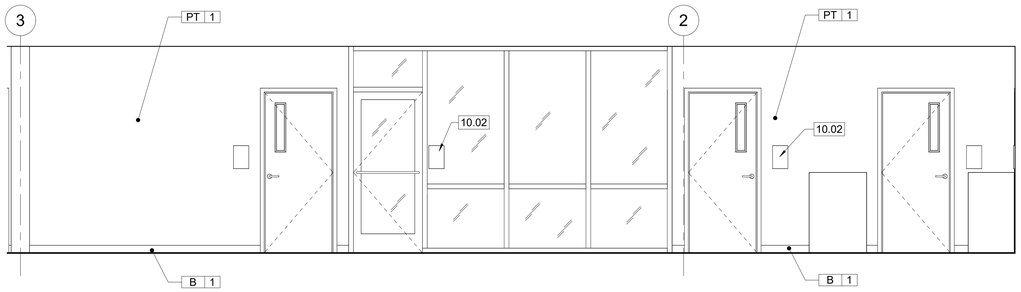

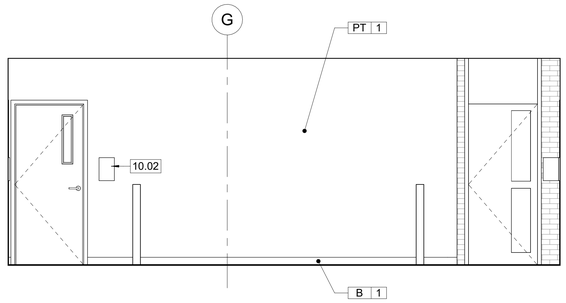

EXEC. SUITES/ OPEN OFFICE 102 ELEVATIONS | 3/8" = 1'-0" | 3

KEYNOTES

10.02	SIGNAGE: HEIGHT TO COMPLY WITH 11B-703.4, SEE SIGNAGE SCHEDULE ON SHT. A801
E.11	(E) MASONRY WALL

LEGEND

PT 1	MATERIAL FINISH, SEE SHEET A602

DIVISION OF THE STATE ARCHITECT

IDENTIFICATION STAMP
DIV. OF THE STATE ARCHITECT
APP: 03-123218 INC:
REVIEWED FOR
SS ☑ FLS ☑ ACS ☑
DATE: 07/11/2024

MOORPARK COLLEGE

7075 CAMPUS RD
MOORPARK, CA 93021
TEL: (805) 378 - 1400

PROJECT TITLE AND SCHOOL LOCATION

ADMINISTRATION BUILDING SEISMIC REHABILITATION AND RENOVATION

7075 CAMPUS ROAD
MOORPARK, CA 91320

COMMISSIONED ARCHITECT

AMADOR

amador whittle architects, inc.
28328 AGOURA RD, 203 | AGOURA HILLS CA. 91301 | 805-558-4334

CONSULTANT

STAMPS/SEALS

LICENSED ARCHITECT
JEAN ANN AMADOR
C-22205
APRIL 30, 2025
DATE
STATE OF CALIFORNIA

1/9/24	DSA V2
8/23/23	DSA V1

SHEET TITLE:

INTERIOR ELEVATIONS

PROJECT NO: 21-MPC-040	PROJECT ARCH:
DRAWN: GW	CHECKED:
SHEET NUMBER: A701	
DATE: 1/9/24	SHEET: ___ OF ___

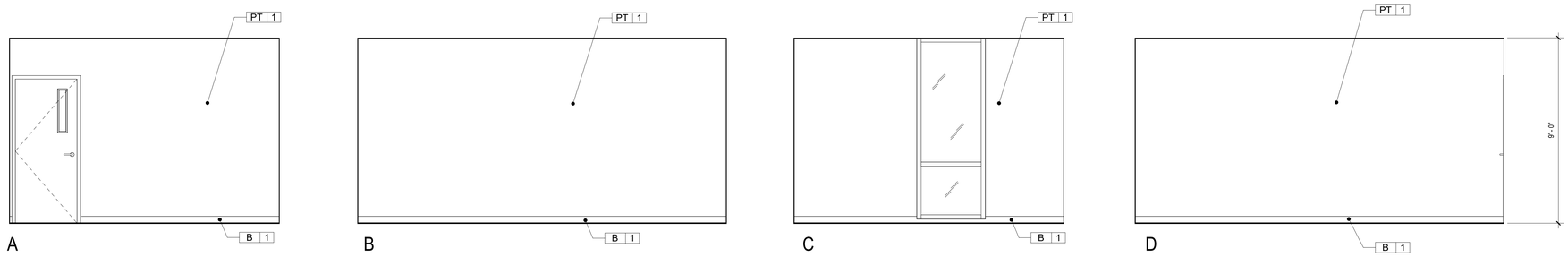

DIR. OF COMMUNICATIONS 103 ELEVATIONS | 3/8" = 1'-0" | 1

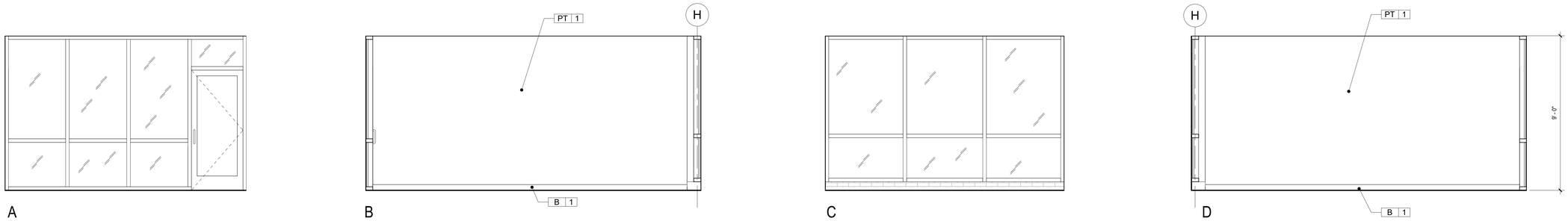

VICE PRESIDENT 104 ELEVATIONS | 3/8" = 1'-0" | 2

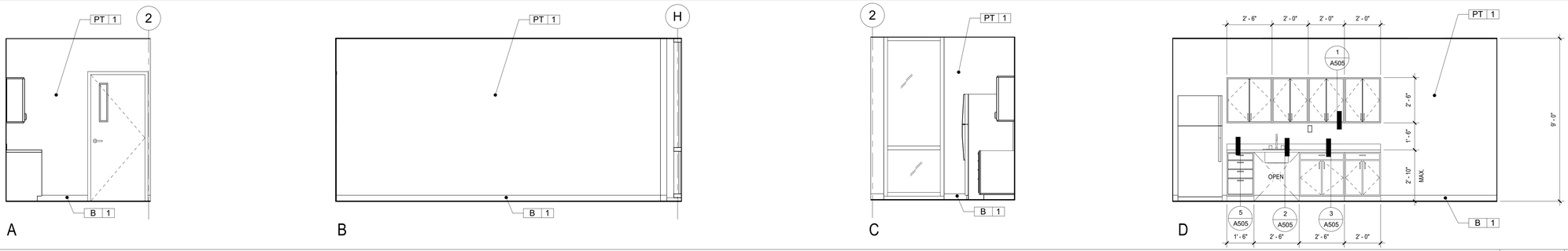

BREAK ROOM 105 ELEVATIONS | 3/8" = 1'-0" | 3

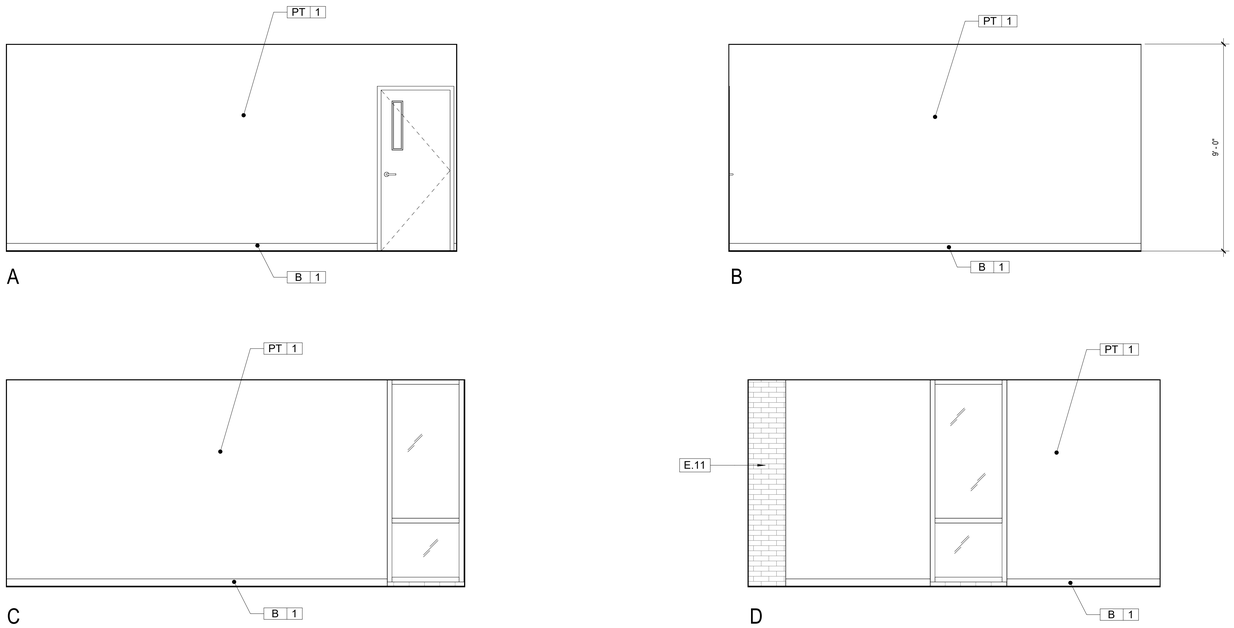

PRESIDENT 106 ELEVATIONS | 3/8" = 1'-0" | 4

KEYNOTES

E.11 (E) MASONRY WALL

LEGEND

PT 1 MATERIAL FINISH, SEE SHEET A602

DIVISION OF THE STATE ARCHITECT

IDENTIFICATION STAMP
DIV. OF THE STATE ARCHITECT
APP: 03-123218 INC:
REVIEWED FOR
SS ☑ FLS ☑ ACS ☑
DATE: 07/11/2024

MOORPARK COLLEGE

7075 CAMPUS RD
MOORPARK, CA 93021
TEL: (805) 378 - 1400

PROJECT TITLE AND SCHOOL LOCATION

ADMINISTRATION BUILDING SEISMIC REHABILITATION AND RENOVATION
7075 CAMPUS ROAD
MOORPARK, CA 91320

COMMISSIONED ARCHITECT

AMADOR

amador whittle architects, inc.
28328 AGOURA RD, 203 | AGOURA HILLS CA, 91301 | 805-558-4334

CONSULTANT

STAMPS/SEALS

LICENSED ARCHITECT
JEAN ANN AMADOR
C-22205
APRIL 30, 2025
DATE
STATE OF CALIFORNIA

1/9/24	DSA V2
8/23/23	DSA V1

SHEET TITLE:

INTERIOR ELEVATIONS

PROJECT NO.: 21-MPC-040	PROJECT ARCH.: Designer
DRAWN: Author	CHECKED: Checker

SHEET NUMBER:

A702

DATE: 1/9/24 | SHEET: ___ OF ___

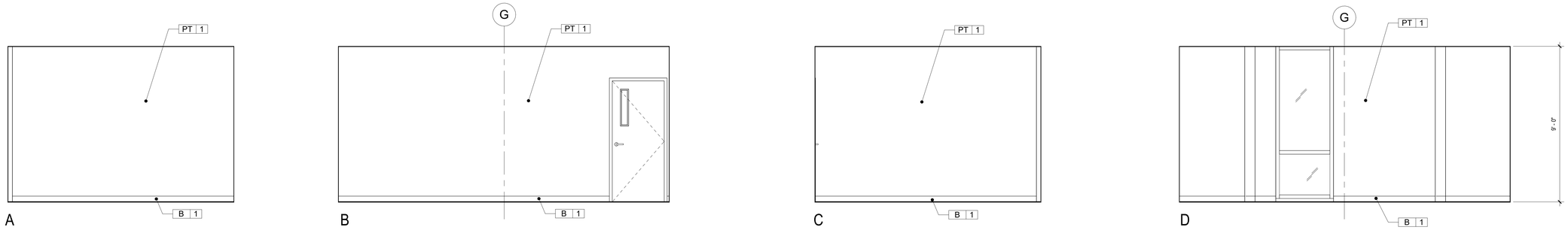

VICE PRESIDENT 107 ELEVATIONS | 3/8" = 1'-0" | 1

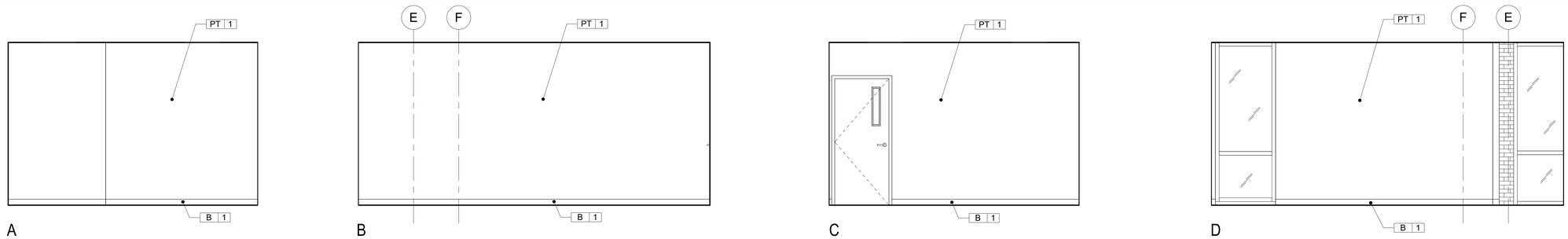

VICE PRESIDENT 108 ELEVATIONS | 3/8" = 1'-0" | 2

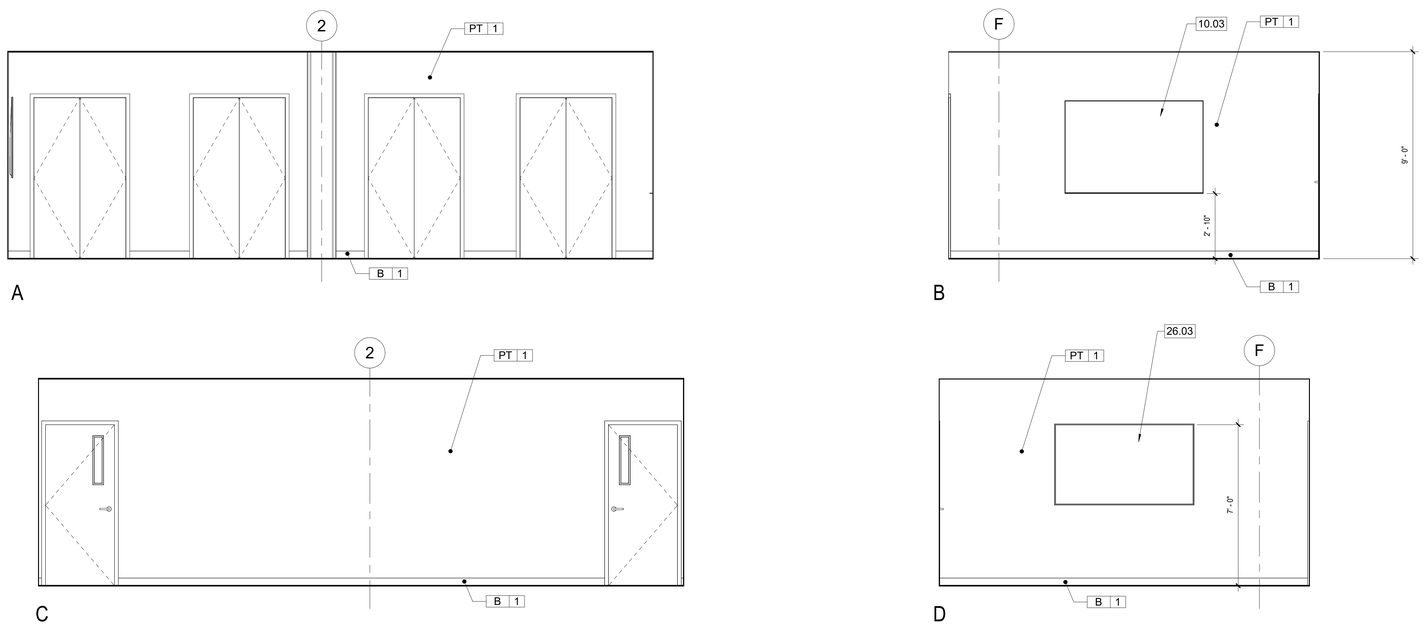

CONFERENCE 109 ELEVATIONS | 3/8" = 1'-0" | 3

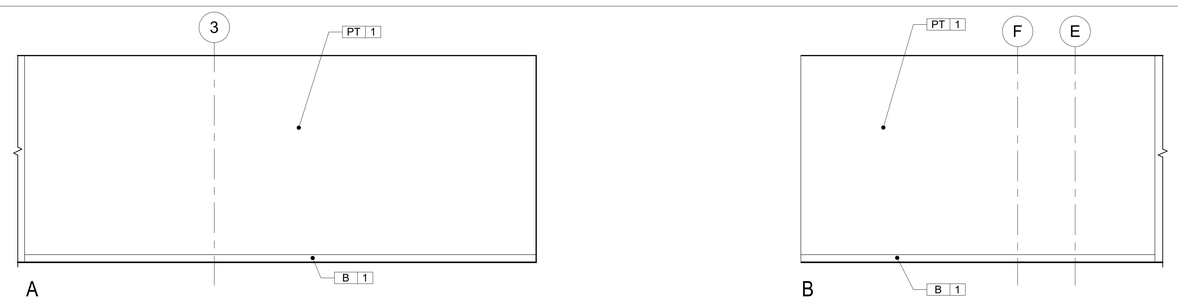

WAITING 110 ELEVATIONS | 3/8" = 1'-0" | 4

KEYNOTES

10.03 4' x 6' WHITEBOARD; FOR BACKING SEE 8/S020

26.03 WALL MOUNTED FLAT SCREEN MONITOR; FOR BACKING SEE 8/S020

LEGEND

PT 1 MATERIAL FINISH, SEE SHEET A602

DIVISION OF THE STATE ARCHITECT

IDENTIFICATION STAMP
DIV. OF THE STATE ARCHITECT
APP: 03-123218 INC:
REVIEWED FOR
SS ☑ FLS ☑ ACS ☑
DATE: 07/11/2024

MOORPARK COLLEGE

7075 CAMPUS RD
MOORPARK, CA 93021
TEL: (805) 378 - 1400

PROJECT TITLE AND SCHOOL LOCATION

ADMINISTRATION BUILDING SEISMIC REHABILITATION AND RENOVATION

7075 CAMPUS ROAD
MOORPARK, CA 91320

COMMISSIONED ARCHITECT

AMADOR

amador whittle architects, inc.
28328 AGOURA RD, 203 | AGOURA HILLS CA, 91301 | 805-558-4334

CONSULTANT

STAMPS/SEALS

LICENSED ARCHITECT
JEAN ANN AMADOR
C-22205
APRIL 30, 2025
DATE
STATE OF CALIFORNIA

1/9/24	DSA V2
8/23/23	DSA V1

SHEET TITLE:

INTERIOR ELEVATIONS

PROJECT NO: 21-MPC-040	PROJECT ARCH: Designer
DRAWN: Author	CHECKED: Checker

SHEET NUMBER:

A703

DATE: 1/9/24 | SHEET: ___ OF ___

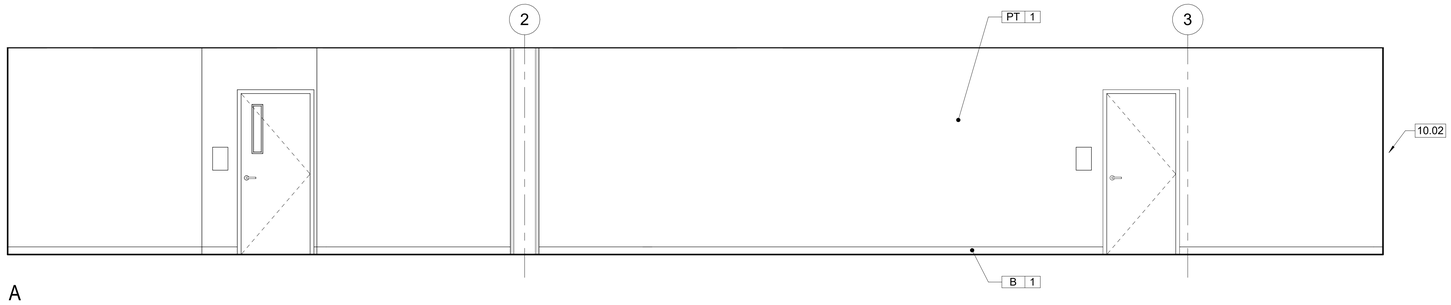

A

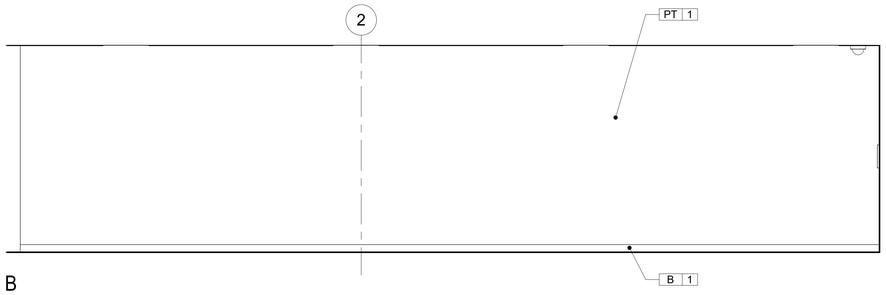

B

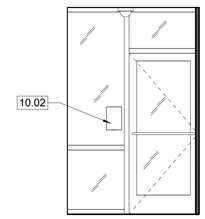

C

SOUTH HALLWAY 113 ELEVATIONS | 3/8" = 1'-0" | 1

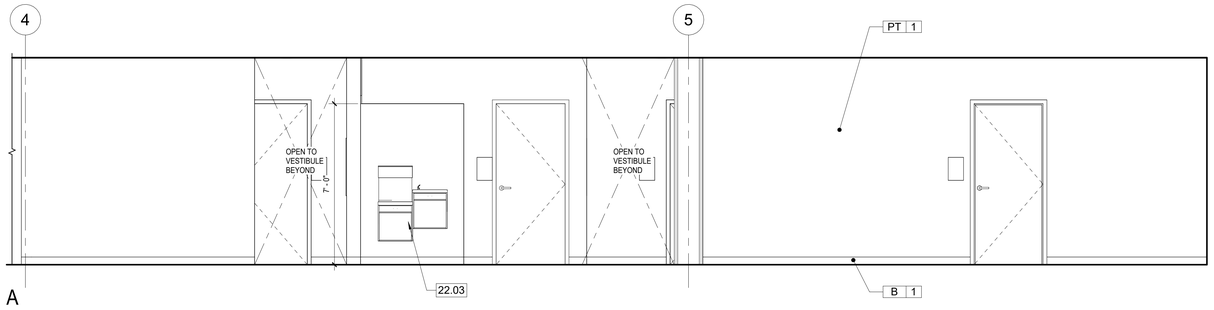

A

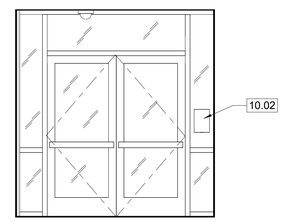

B

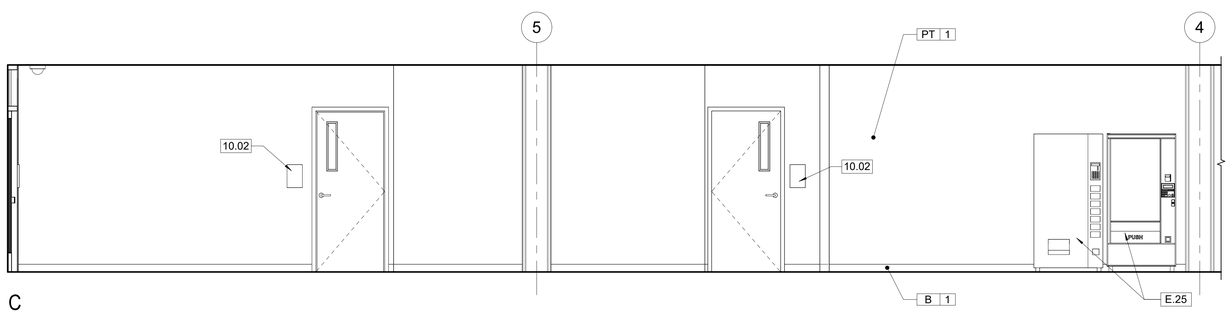

C

NORTH HALLWAY 113 ELEVATIONS | 3/8" = 1'-0" | 2

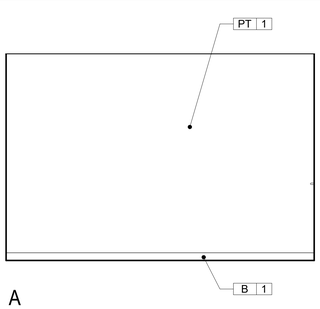

A

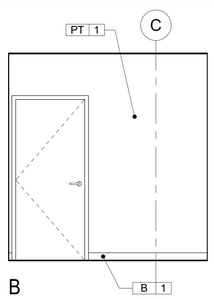

B

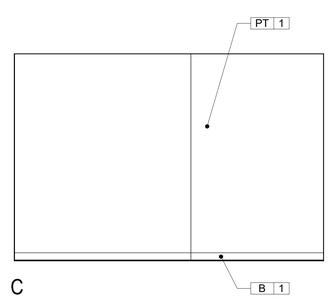

C

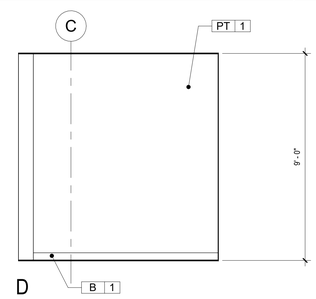

D

MENTAL HEALTH 114 ELEVATIONS | 3/8" = 1'-0" | 3

KEYNOTES

10.02	SIGNAGE: HEIGHT TO COMPLY WITH 11B-703.4, SEE SIGNAGE SCHEDULE ON SHT. A801
22.03	HI-LO DRINKING FOUNTAIN WITH BOTTLE FILLER
E.25	(E) RELOCATED VENDING MACHINES

LEGEND

PT 1	MATERIAL FINISH, SEE SHEET A602

DIVISION OF THE STATE ARCHITECT

IDENTIFICATION STAMP
DIV. OF THE STATE ARCHITECT
APP: 03-123218 INC:
REVIEWED FOR
SS ☑ FLS ☑ ACS ☑
DATE: 07/11/2024

MOORPARK COLLEGE

7075 CAMPUS RD
MOORPARK, CA 93021
TEL: (805) 378 - 1400

PROJECT TITLE AND SCHOOL LOCATION

ADMINISTRATION BUILDING SEISMIC REHABILITATION AND RENOVATION

7075 CAMPUS ROAD
MOORPARK, CA 91320

COMMISSIONED ARCHITECT

AMADOR

amador whittle architects, inc.
28328 AGOURA RD, 203 | AGOURA HILLS CA, 91301 | 805-558-4334

CONSULTANT

STAMPS/SEALS

LICENSED ARCHITECT
JEAN ANN AMADOR
C-32295
APRIL 30, 2025
DATE
STATE OF CALIFORNIA

1/9/24	DSA V2
8/23/23	DSA V1

SHEET TITLE:

INTERIOR ELEVATIONS

PROJECT NO: 21-MPC-040	PROJECT ARCH: Designer
DRAWN: Author	CHECKED: Checker

SHEET NUMBER:

A704

DATE: 1/9/24 | SHEET: ___ OF ___

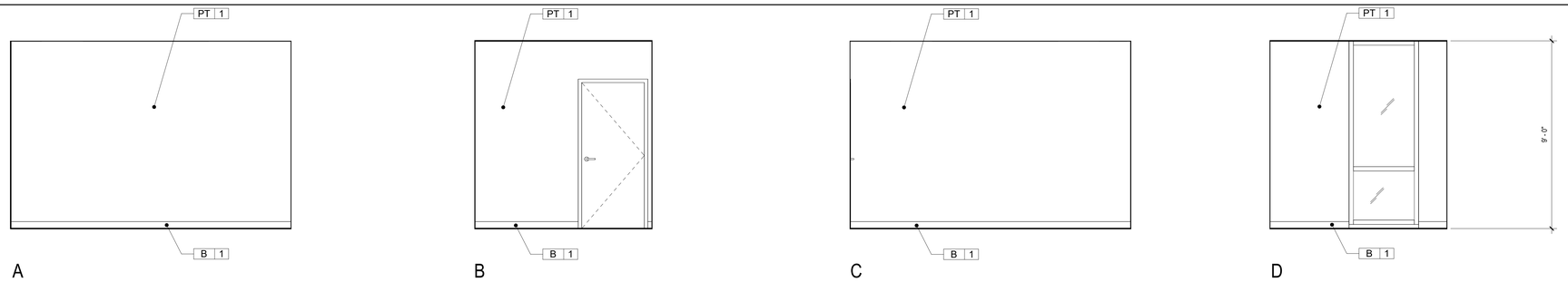

MENTAL HEALTH 115 ELEVATIONS | 3/8" = 1'-0" | 1

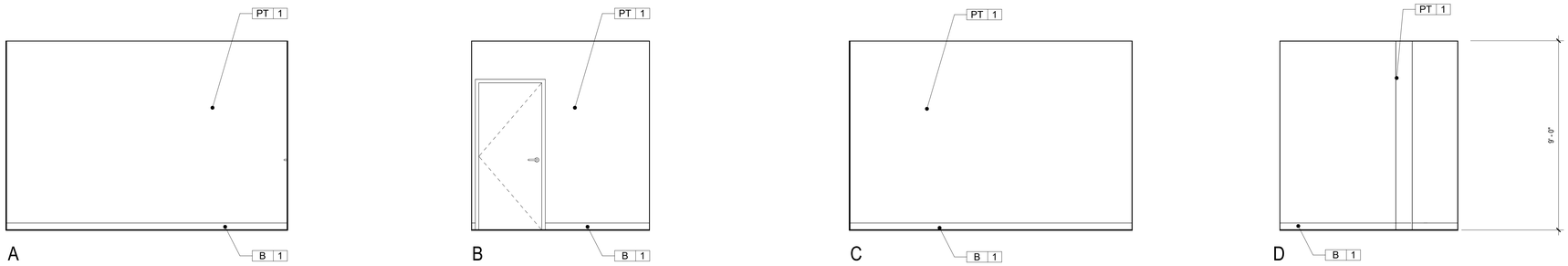

MENTAL HEALTH 116 ELEVATIONS | 3/8" = 1'-0" | 2

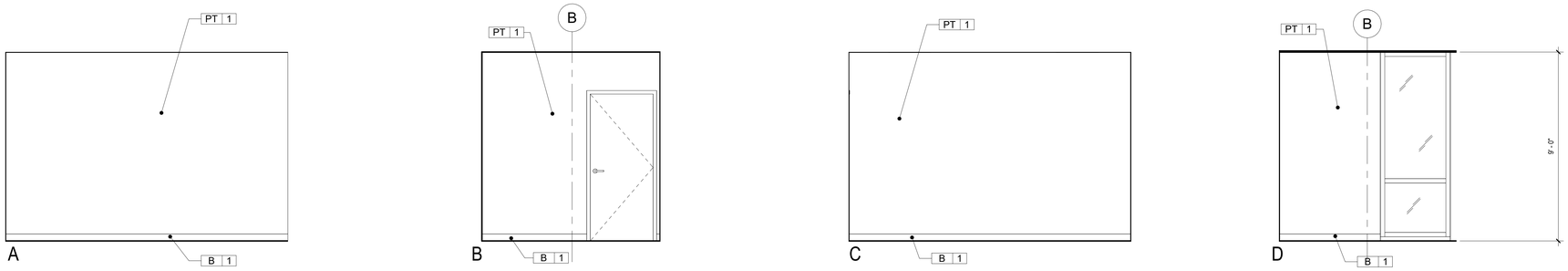

MENTAL HEALTH 117 ELEVATIONS | 3/8" = 1'-0" | 3

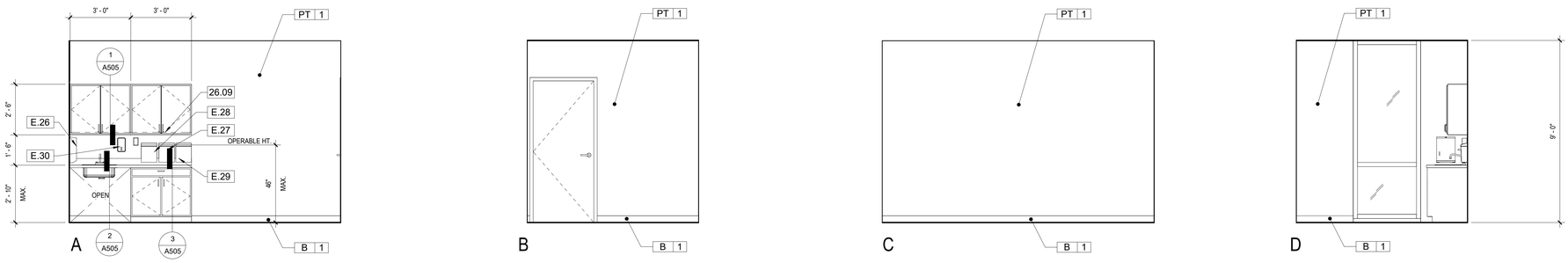

EXAM 118 ELEVATIONS | 3/8" = 1'-0" | 4

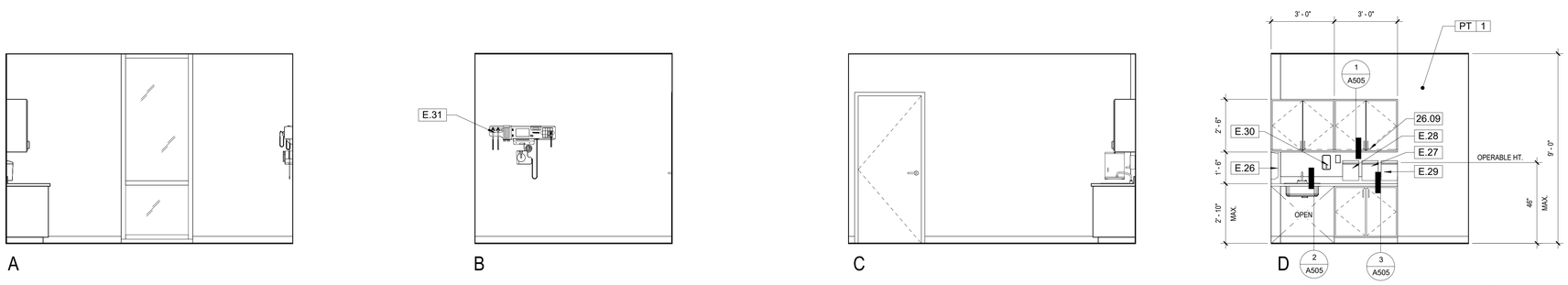

EXAM 119 ELEVATIONS | 3/8" = 1'-0" | 5

KEYNOTES

26.09	UNDER CABINET STRIP LIGHT FIXTURE, SEE ELEC. DWGS.
E.26	(E) PAPER TOWEL DISPENSER TO BE REUSED
E.27	(E) LATEX GLOVE DISPENSER TO BE REUSED
E.28	(E) SHARPS DISPOSAL TO BE REUSED
E.29	(E) MEDICAL BAG DISPENSER TO BE REUSED
E.30	(E) SOAP DISPENSER TO BE REUSED
E.31	(E) WALL MTD. MEDICAL EQUIPMENT BY OWNER

LEGEND

PT 1	MATERIAL FINISH, SEE SHEET A602

DIVISION OF THE STATE ARCHITECT

IDENTIFICATION STAMP
DIV. OF THE STATE ARCHITECT
APP: 03-123218 INC:
REVIEWED FOR
SS ☑ FLS ☑ ACS ☑
DATE: 07/11/2024

MOORPARK COLLEGE

7075 CAMPUS RD
MOORPARK, CA 93021
TEL: (805) 378 - 1400

PROJECT TITLE AND SCHOOL LOCATION

ADMINISTRATION BUILDING SEISMIC REHABILITATION AND RENOVATION

7075 CAMPUS ROAD
MOORPARK, CA 91320

COMMISSIONED ARCHITECT

AMADOR

amador whittle architects, inc.
28328 AGOURA RD, 203 | AGOURA HILLS CA. 91301 | 805-558-4334

CONSULTANT

STAMPS/SEALS

LICENSED ARCHITECT
JEAN ANN AMADOR
C-22205
APRIL 30, 2025
DATE
STATE OF CALIFORNIA

1/9/24	DSA V2
8/23/23	DSA V1

SHEET TITLE:

INTERIOR ELEVATIONS

PROJECT NO: 21-MPC-040	PROJECT ARCH: Designer
DRAWN: Author	CHECKED: Checker

SHEET NUMBER:

A705

DATE: 1/9/24 | SHEET: ___ OF ___

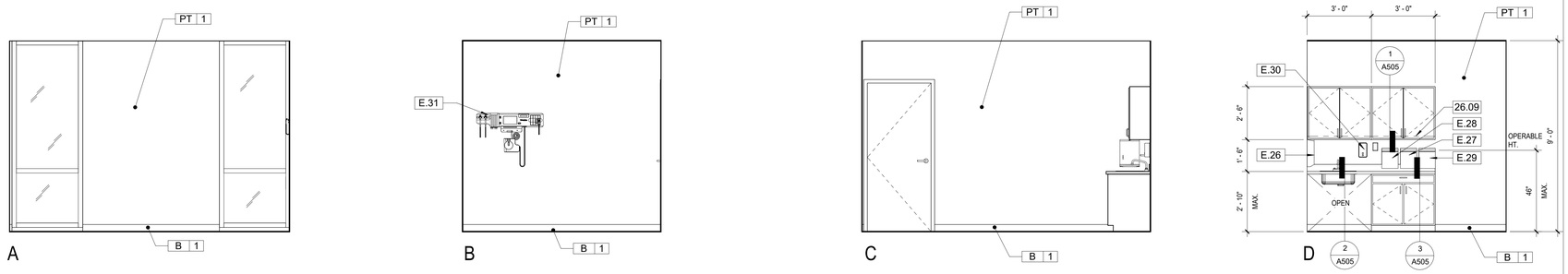

EXAM 120 ELEVATIONS | 3/8" = 1'-0" | 1

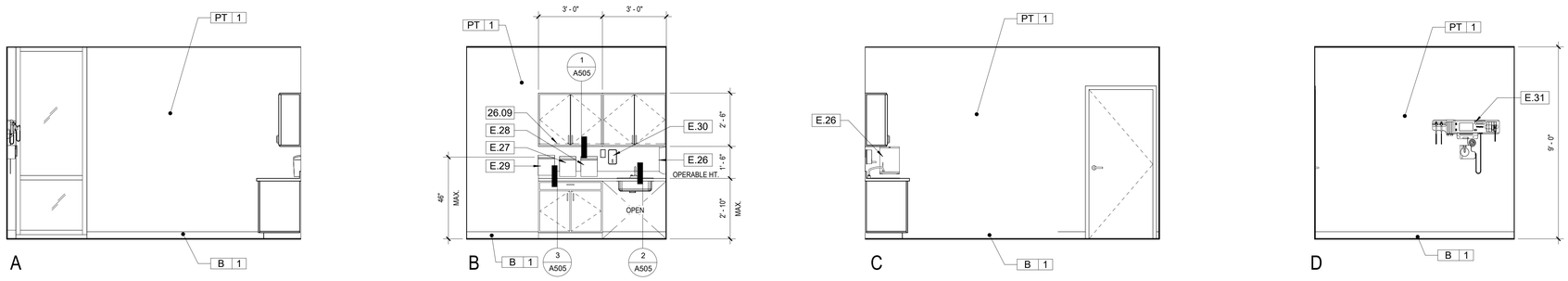

EXAM 121 ELEVATIONS | 3/8" = 1'-0" | 2

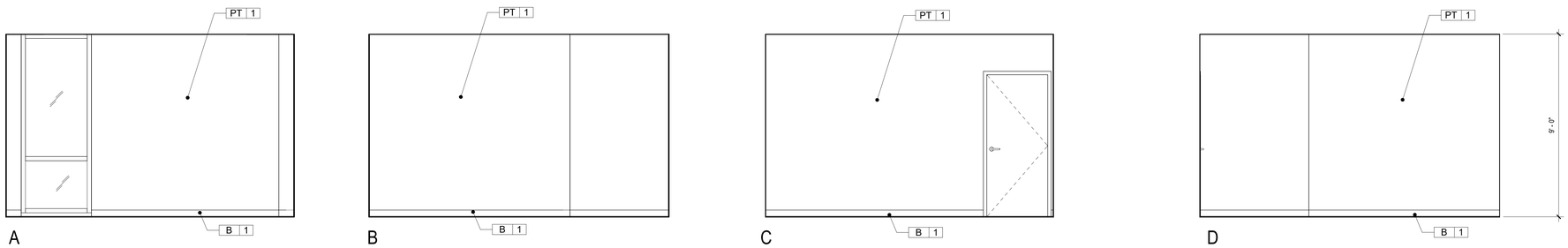

HEALTH COORD. OFFICE 123 ELEVATIONS | 3/8" = 1'-0" | 3

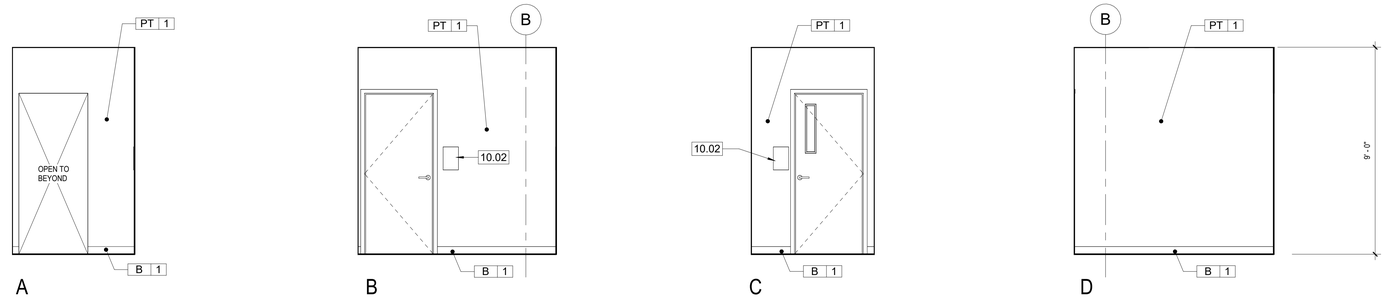

VESTIBULE 125 ELEVATIONS | 3/8" = 1'-0" | 4

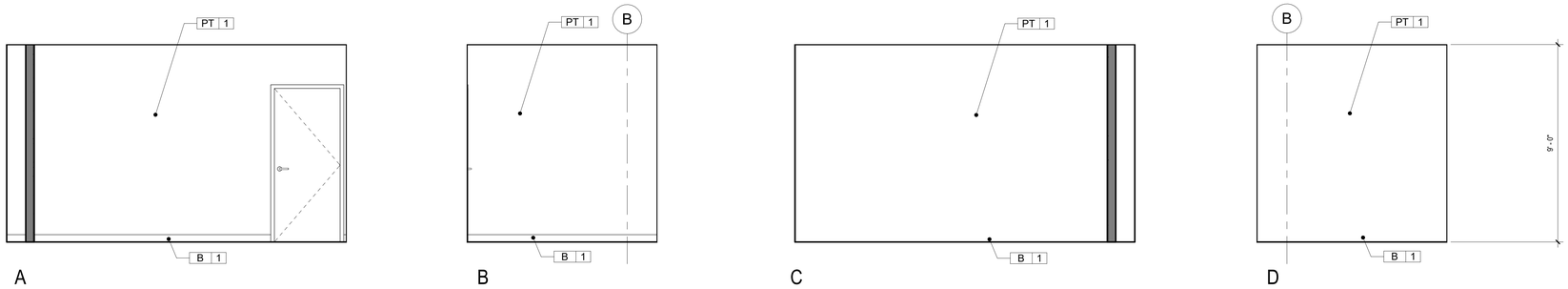

ASSISTANT OFFICE ELEVATIONS | 3/8" = 1'-0" | 5

KEYNOTES

10.02	SIGNAGE: HEIGHT TO COMPLY WITH 11B-703.4, SEE SIGNAGE SCHEDULE ON SHT. A801
26.09	UNDER CABINET STRIP LIGHT FIXTURE, SEE ELEC. DWGS.
E.26	(E) PAPER TOWEL DISPENSER TO BE REUSED
E.27	(E) LATEX GLOVE DISPENSER TO BE REUSED
E.28	(E) SHARPS DISPOSAL TO BE REUSED
E.29	(E) MEDICAL BAG DISPENSER TO BE REUSED
E.30	(E) SOAP DISPENSER TO BE REUSED
E.31	(E) WALL MTD. MEDICAL EQUIPMENT BY OWNER

LEGEND

PT 1	MATERIAL FINISH, SEE SHEET A602

DIVISION OF THE STATE ARCHITECT

IDENTIFICATION STAMP
DIV. OF THE STATE ARCHITECT
APP: 03-123218 INC:
REVIEWED FOR
SS ☑ FLS ☑ ACS ☑
DATE: 07/11/2024

MOORPARK COLLEGE

7075 CAMPUS RD
MOORPARK, CA 93021
TEL: (805) 378 - 1400

PROJECT TITLE AND SCHOOL LOCATION

ADMINISTRATION BUILDING SEISMIC REHABILITATION AND RENOVATION

7075 CAMPUS ROAD
MOORPARK, CA 91320

COMMISSIONED ARCHITECT

AMADOR

amador whittle architects, inc.
28328 AGOURA RD, 203 | AGOURA HILLS CA. 91301 | 805-558-4334

CONSULTANT

STAMPS/SEALS

LICENSED ARCHITECT
JEAN ANN AMADOR
C-22205
APRIL 30, 2025
DATE
STATE OF CALIFORNIA

1/9/24	DSA V2
8/23/23	DSA V1

SHEET TITLE:

INTERIOR ELEVATIONS

PROJECT NO: 21-MPC-040	PROJECT ARCH: Designer
DRAWN: Author	CHECKED: Checker

SHEET NUMBER:

A706

DATE: 1/9/24 | SHEET: ___ OF ___

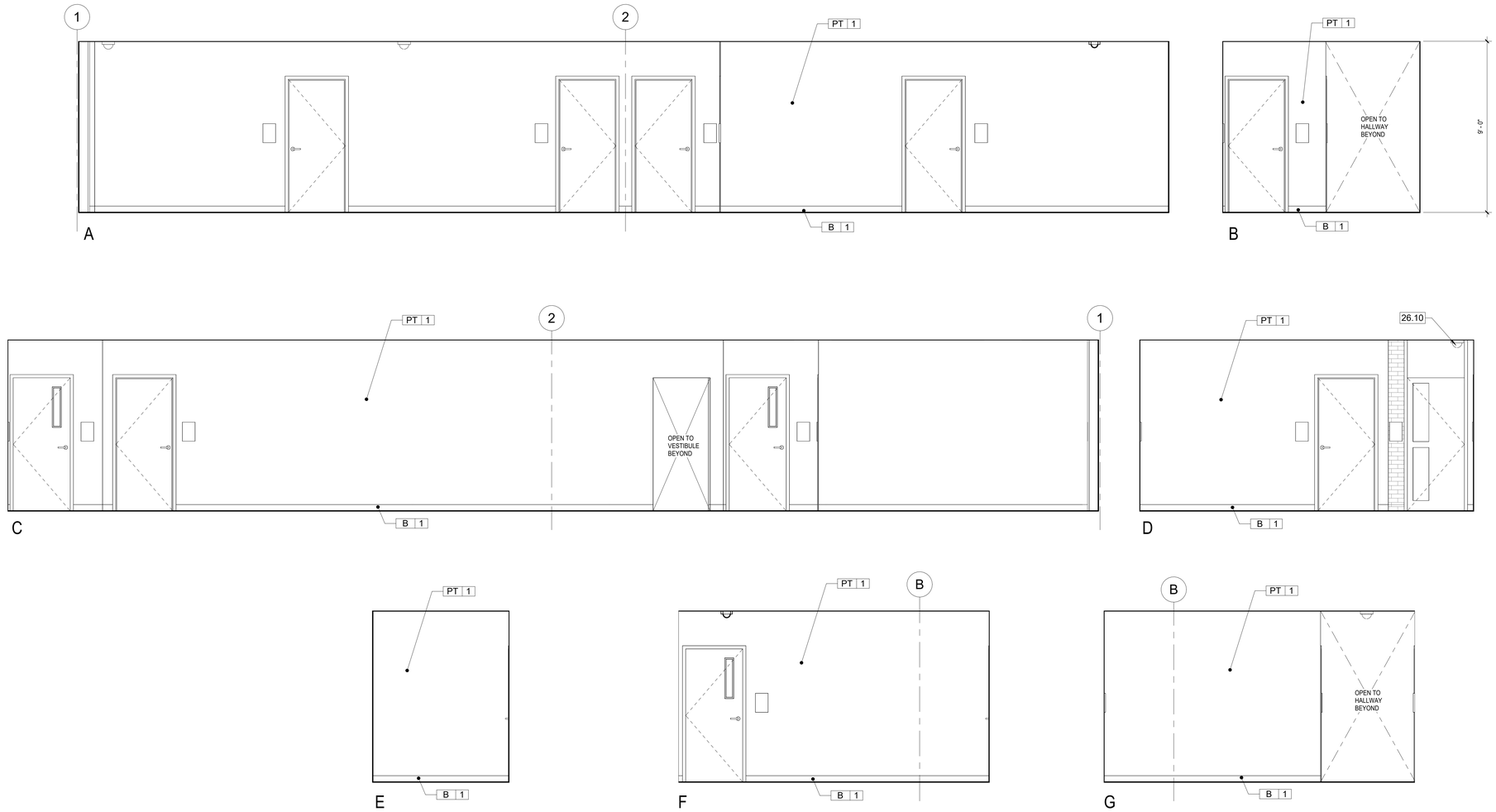

HEALTH WAITING ELEVATIONS | 3/8" = 1'-0" | 1

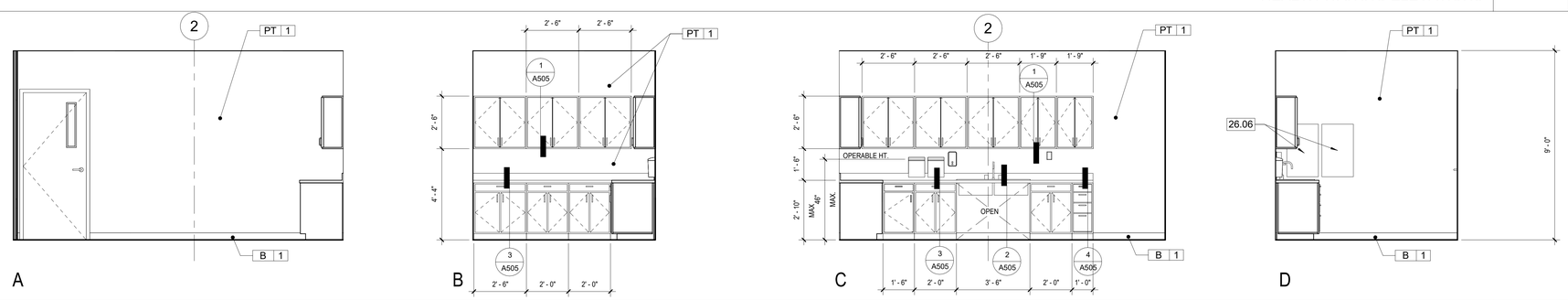

WORKROOM 128 ELEVATIONS | 3/8" = 1'-0" | 2

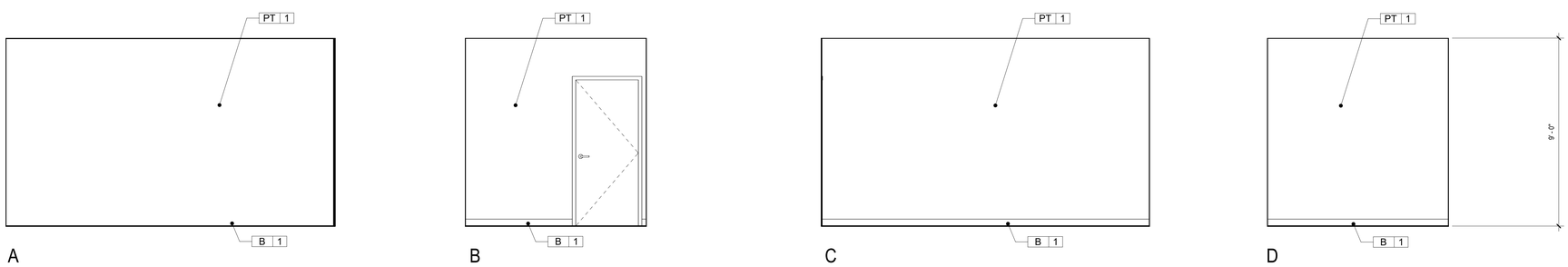

SHARED OFFICE 129 ELEVATIONS | 3/8" = 1'-0" | 3

KEYNOTES

26.06 RECESSED ELEC. PANEL, SEE ELEC. DWGS.
26.10 CEILING MOUNTED SECURITY CAMERA, SEE ELEC. DWGS.

LEGEND

PT 1 MATERIAL FINISH, SEE SHEET A602

DIVISION OF THE STATE ARCHITECT

IDENTIFICATION STAMP
DIV. OF THE STATE ARCHITECT
APP: 03-123218 INC:
REVIEWED FOR
SS ☑ FLS ☑ ACS ☑
DATE: 07/11/2024

MOORPARK COLLEGE

7075 CAMPUS RD
MOORPARK, CA 93021
TEL: (805) 378 - 1400

PROJECT TITLE AND SCHOOL LOCATION

ADMINISTRATION BUILDING SEISMIC REHABILITATION AND RENOVATION
7075 CAMPUS ROAD
MOORPARK, CA 91320

COMMISSIONED ARCHITECT

AMADOR

amador whittle architects, inc.
28328 AGOURA RD, 203 | AGOURA HILLS CA. 91301 | 805-558-4334

CONSULTANT

STAMPS/SEALS

LICENSED ARCHITECT
JEAN ANN AMADOR
C-22205
APRIL 30, 2025
DATE
STATE OF CALIFORNIA

1/9/24	DSA V2
8/23/23	DSA V1

SHEET TITLE:

INTERIOR ELEVATIONS

PROJECT NO: 21-MPC-040	PROJECT ARCH: Designer
DRAWN: Author	CHECKED: Checker

SHEET NUMBER:

A707

DATE: 1/9/24 SHEET: ___ OF ___

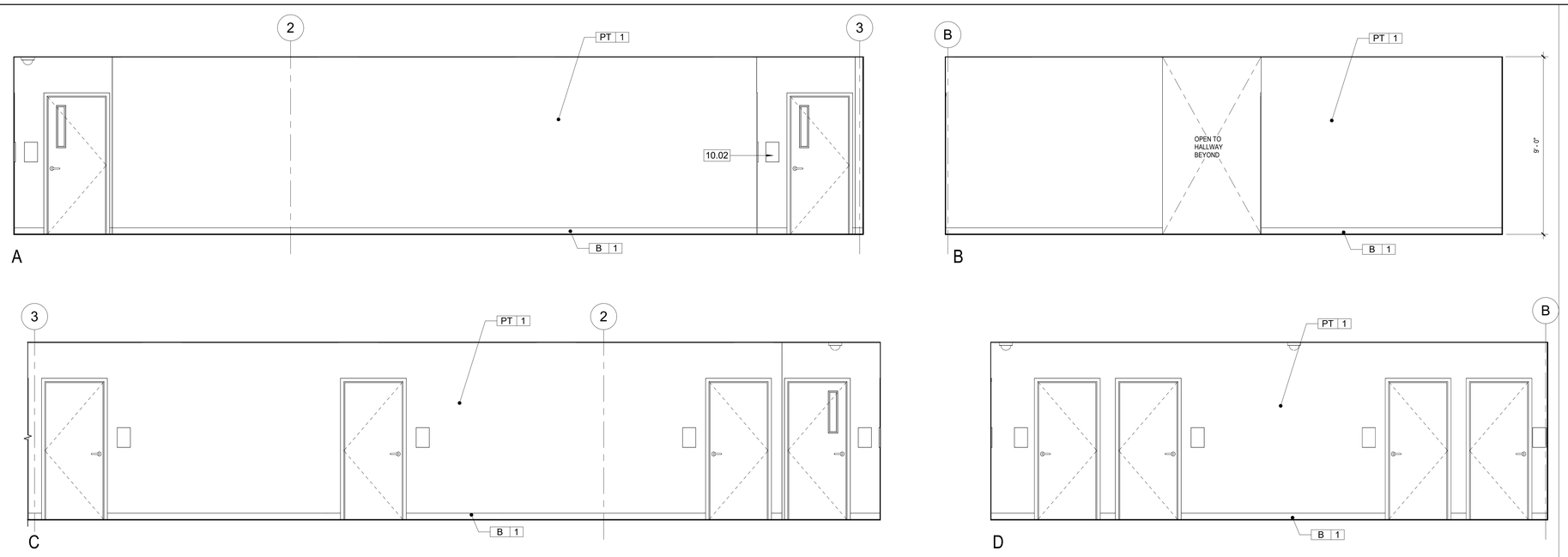

HALLWAY 130 ELEVATIONS | 3/8" = 1'-0" | 1

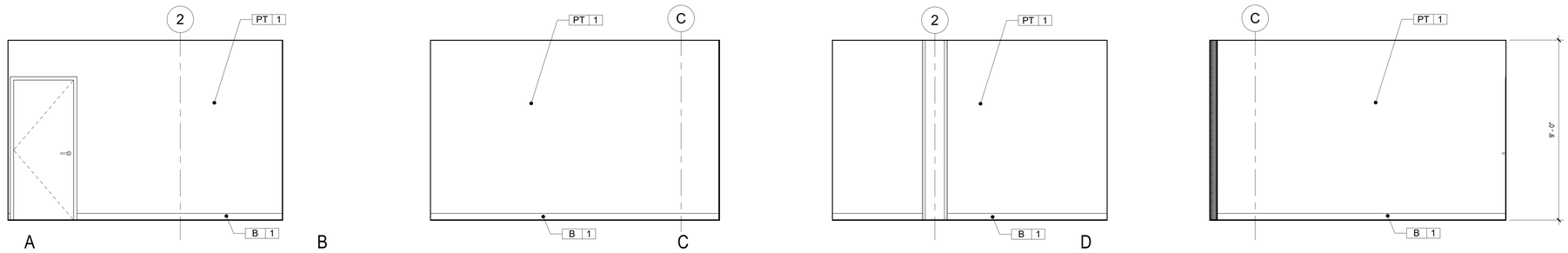

HEALTH ED. OFFICE 131 ELEVATIONS | 3/8" = 1'-0" | 2

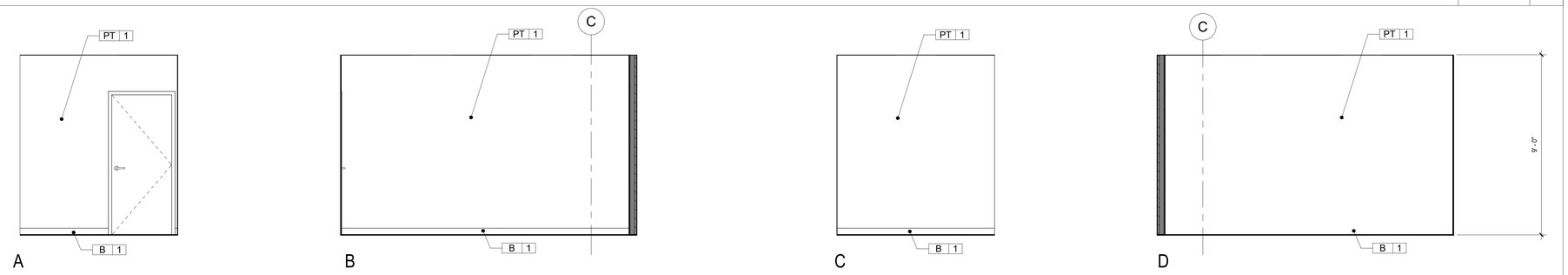

MEDICAL STORAGE 132 ELEVATIONS | 3/8" = 1'-0" | 3

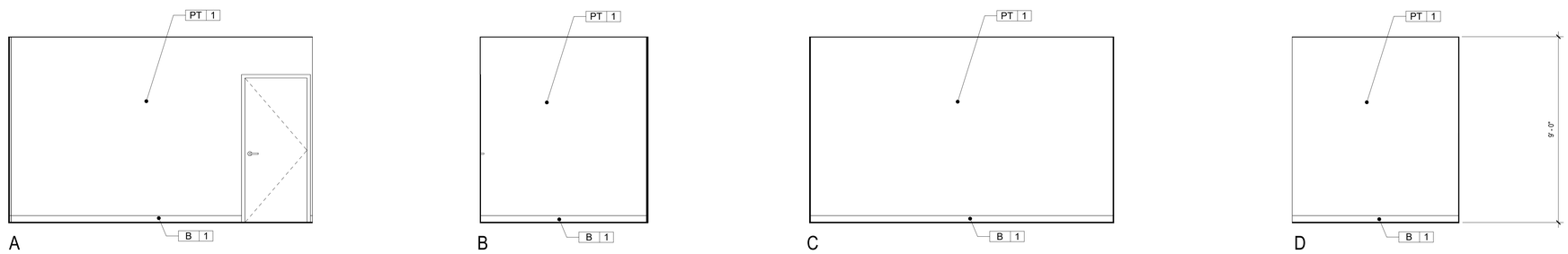

GEN. SUPPORT OFFICE 133 ELEVATIONS | 3/8" = 1'-0" | 4

KEYNOTES

10.02 SIGNAGE: HEIGHT TO COMPLY WITH 11B-703.4, SEE SIGNAGE SCHEDULE ON SHT. A801

LEGEND

PT 1 MATERIAL FINISH, SEE SHEET A602

DIVISION OF THE STATE ARCHITECT

IDENTIFICATION STAMP
DIV. OF THE STATE ARCHITECT
APP: 03-123218 INC:
REVIEWED FOR
SS ☑ FLS ☑ ACS ☑
DATE: 07/11/2024

MOORPARK COLLEGE

7075 CAMPUS RD
MOORPARK, CA 93021
TEL: (805) 378 - 1400

PROJECT TITLE AND SCHOOL LOCATION

ADMINISTRATION BUILDING SEISMIC REHABILITATION AND RENOVATION
7075 CAMPUS ROAD
MOORPARK, CA 91320

COMMISSIONED ARCHITECT

AMADOR

amador whittle architects, inc.
28328 AGOURA RD, 203 | AGOURA HILLS CA, 91301 | 805-558-4334

CONSULTANT

STAMPS/SEALS

LICENSED ARCHITECT
JEAN ANN AMADOR
C-22205
APRIL 30, 2025
DATE
STATE OF CALIFORNIA

1/9/24	DSA V2	
8/23/23	DSA V1	

SHEET TITLE:

INTERIOR ELEVATIONS

PROJECT NO: 21-MPC-040 | PROJECT ARCH: Designer
DRAWN: Author | CHECKED: Checker
SHEET NUMBER:

A708

DATE: 1/9/24 | SHEET: ___ OF ___

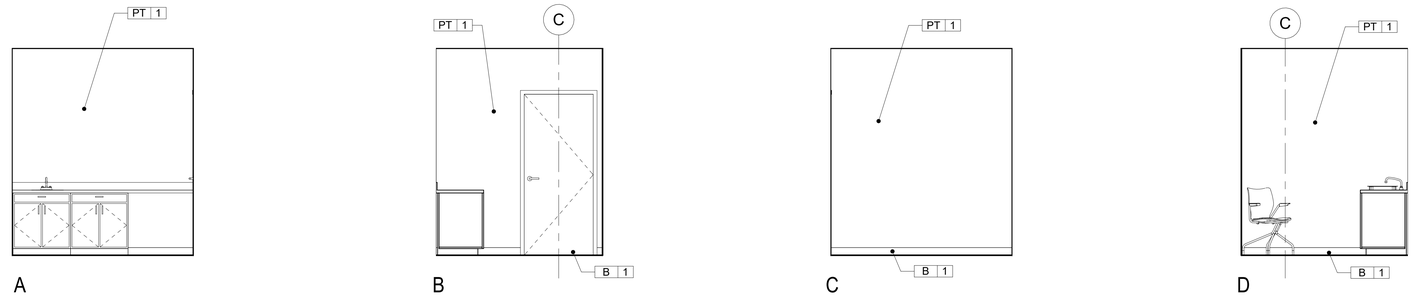

LACTATION RM. ELEVATIONS | 3/8" = 1'-0" | 1

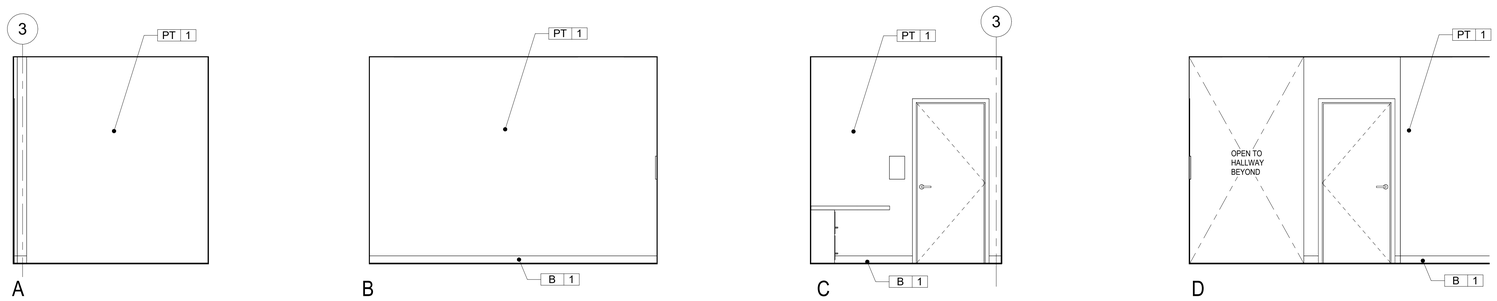

RECEPTION 137 ELEVATIONS | 3/8" = 1'-0" | 2

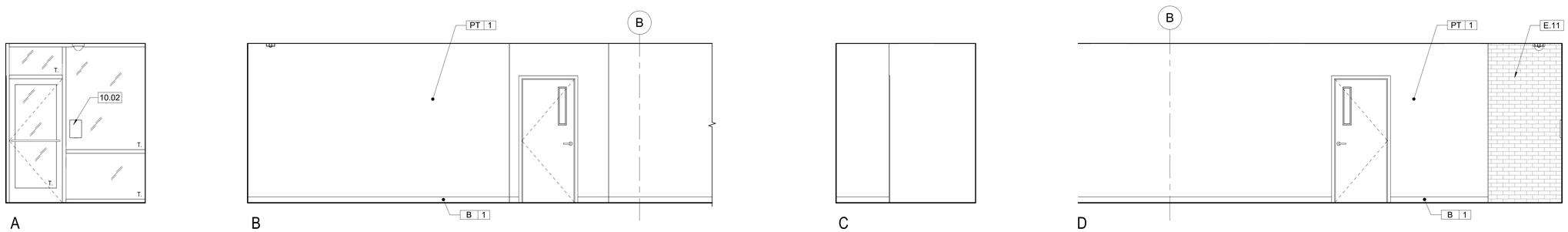

GEN. WAITING 138 ELEVATIONS | 3/8" = 1'-0" | 3

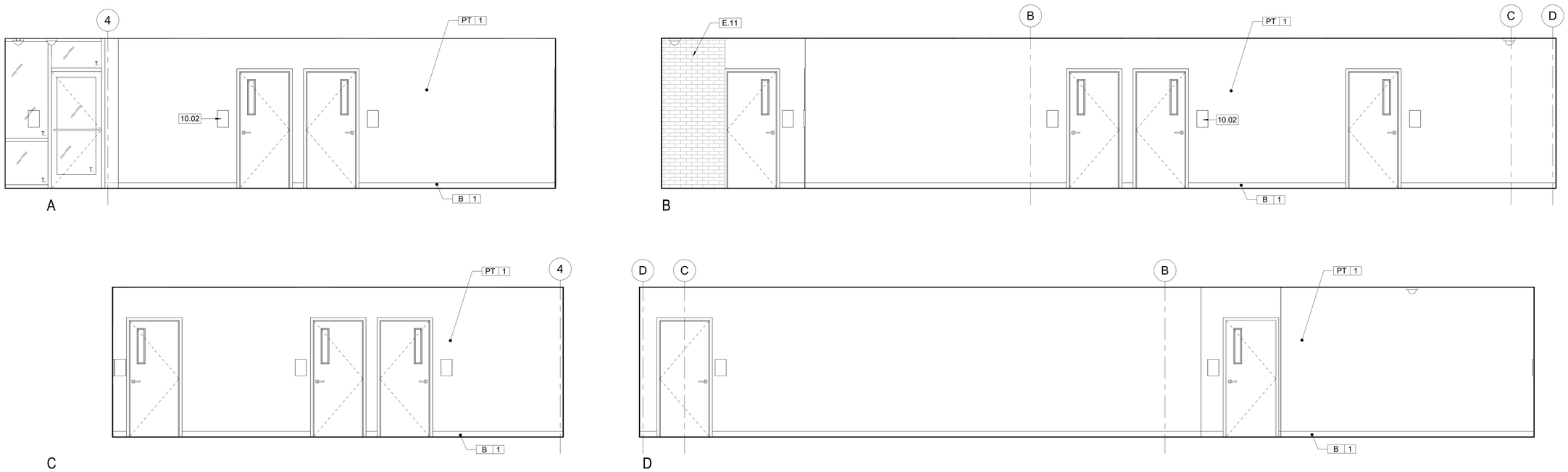

HALLWAY 139 ELEVATIONS | 3/8" = 1'-0" | 4

KEYNOTES

10.02	SIGNAGE: HEIGHT TO COMPLY WITH 11B-703.4, SEE SIGNAGE SCHEDULE ON SHT. A801
E.11	(E) MASONRY WALL

LEGEND

PT 1	MATERIAL FINISH, SEE SHEET A602

DIVISION OF THE STATE ARCHITECT

IDENTIFICATION STAMP
DIV. OF THE STATE ARCHITECT
APP: 03-123218 INC:
REVIEWED FOR
SS ☑ FLS ☑ ACS ☑
DATE: 07/11/2024

MOORPARK COLLEGE

7075 CAMPUS RD
MOORPARK, CA 93021
TEL: (805) 378 - 1400

PROJECT TITLE AND SCHOOL LOCATION

ADMINISTRATION BUILDING SEISMIC REHABILITATION AND RENOVATION

7075 CAMPUS ROAD
MOORPARK, CA 91320

COMMISSIONED ARCHITECT

AMADOR

amador whittle architects, inc.
28328 AGOURA RD, 203 | AGOURA HILLS CA, 91301 | 805-558-4334

CONSULTANT

STAMPS/SEALS

LICENSED ARCHITECT
JEAN ANN AMADOR
C-22205
APRIL 30, 2025
DATE
STATE OF CALIFORNIA

1/9/24	DSA V2
8/23/23	DSA V1

SHEET TITLE:

INTERIOR ELEVATIONS

PROJECT NO: 21-MPC-040	PROJECT ARCH: Designer
DRAWN: Author	CHECKED: Checker

SHEET NUMBER:

A709

DATE: 1/9/24 | SHEET: ___ OF ___

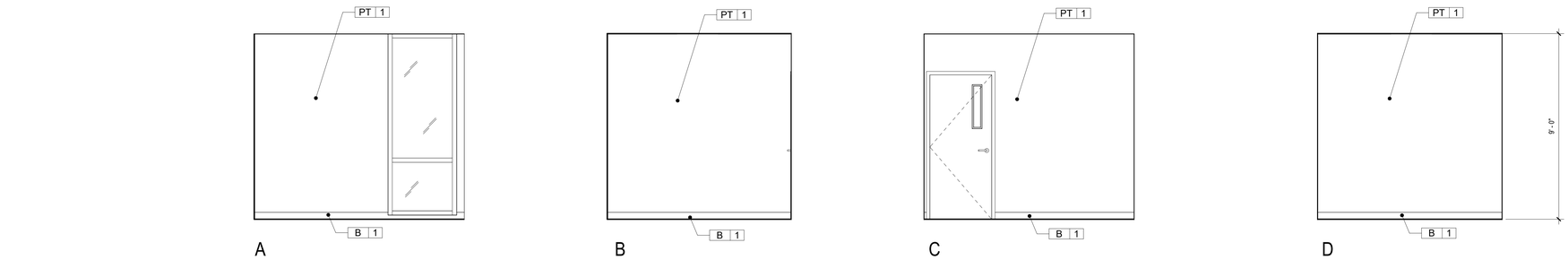

GEN. ASSGN. 140 ELEVATIONS | 3/8" = 1'-0" | 1

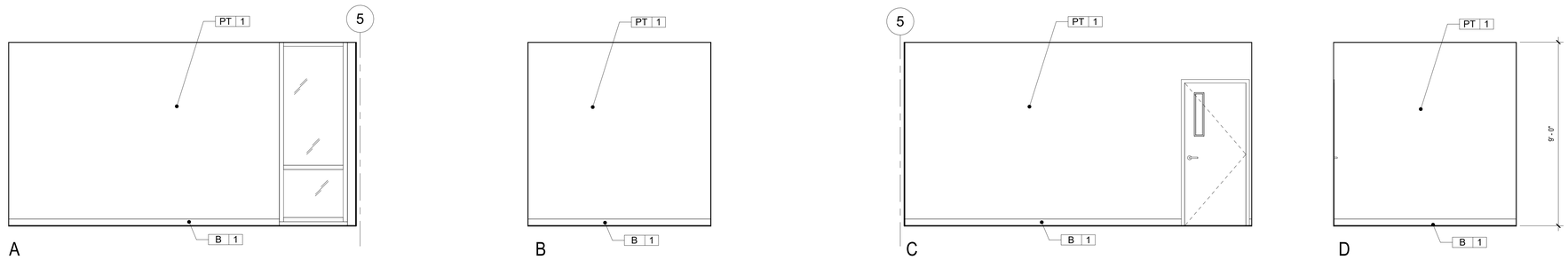

GEN. ASSGN. 141 ELEVATIONS | 3/8" = 1'-0" | 2

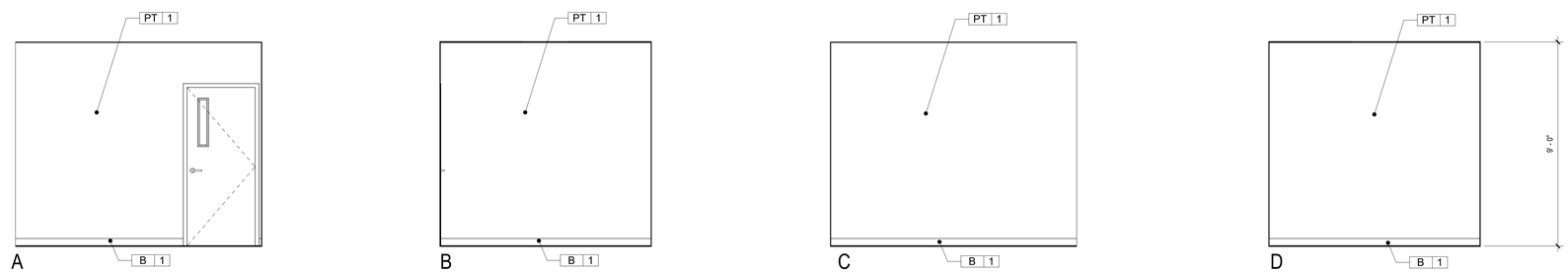

GEN. ASSGN. 142 ELEVATIONS | 3/8" = 1'-0" | 3

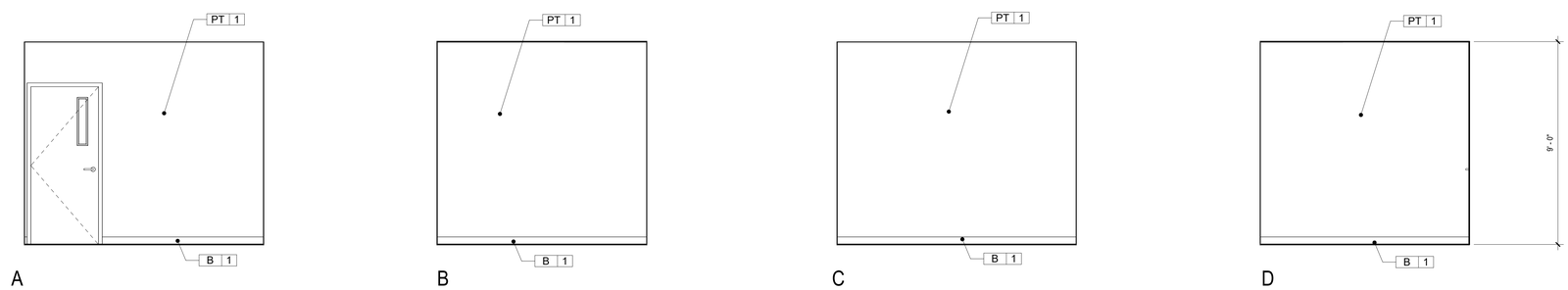

GEN. ASSGN. 143 ELEVATIONS | 3/8" = 1'-0" | 4

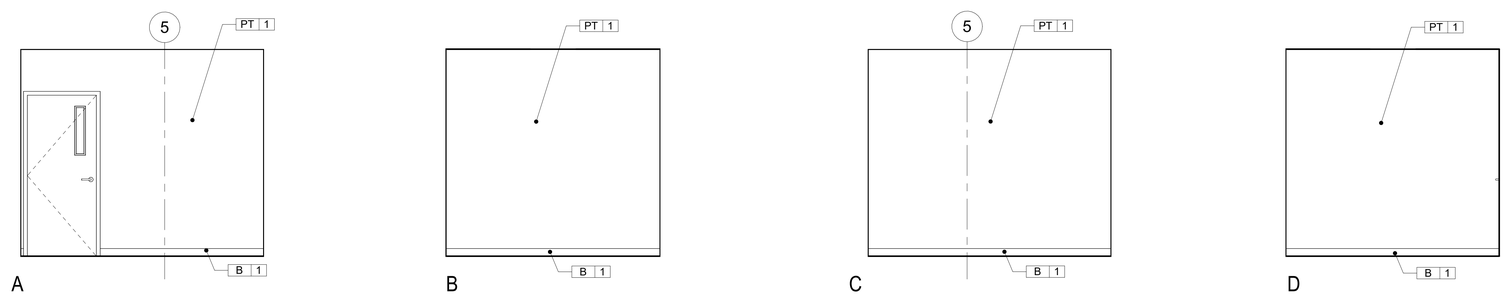

GEN. ASSGN. 144 ELEVATIONS | 3/8" = 1'-0" | 5

KEYNOTES

LEGEND

PT 1 — MATERIAL FINISH, SEE SHEET A602

DIVISION OF THE STATE ARCHITECT

IDENTIFICATION STAMP
DIV. OF THE STATE ARCHITECT
APP: 03-123218 INC:
REVIEWED FOR
SS ☑ FLS ☑ ACS ☑
DATE: 07/11/2024

MOORPARK COLLEGE

7075 CAMPUS RD
MOORPARK, CA 93021
TEL: (805) 378 - 1400

PROJECT TITLE AND SCHOOL LOCATION

ADMINISTRATION BUILDING SEISMIC REHABILITATION AND RENOVATION
7075 CAMPUS ROAD
MOORPARK, CA 91320

COMMISSIONED ARCHITECT

AMADOR

amador whittle architects, inc.
28328 AGOURA RD. 203 | AGOURA HILLS CA. 91301 | 805-558-4334

CONSULTANT

STAMPS/SEALS

LICENSED ARCHITECT
JEAN ANN AMADOR
C-22205
APRIL 30, 2025
DATE
STATE OF CALIFORNIA

1/9/24	DSA V2
8/23/23	DSA V1

SHEET TITLE:

INTERIOR ELEVATIONS

PROJECT NO: 21-MPC-040	PROJECT ARCH: Designer
DRAWN: Author	CHECKED: Checker

SHEET NUMBER:

A710

DATE: 1/9/24 | SHEET: ___ OF ___

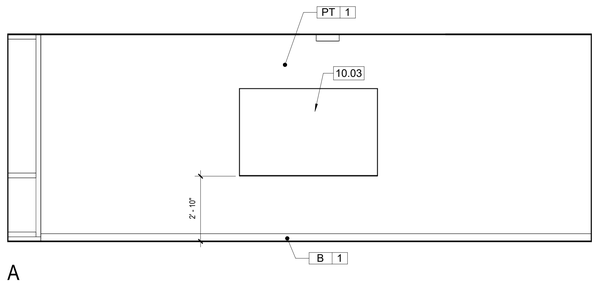

A

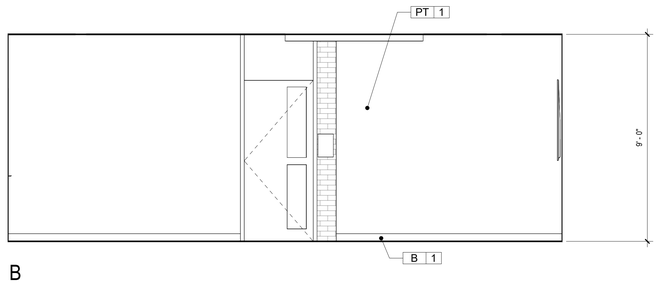

B

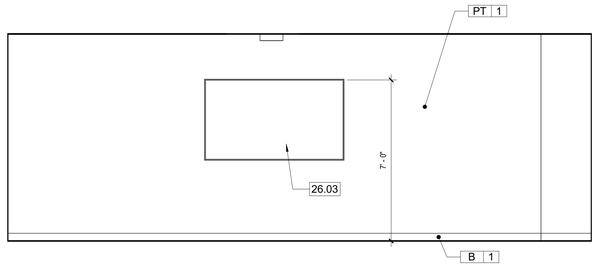

C

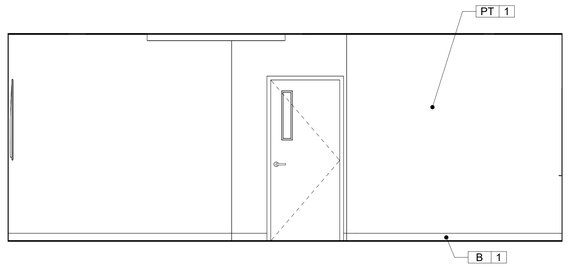

D

CONFERENCE RM. 145 ELEVATIONS | 3/8" = 1'-0" | 1

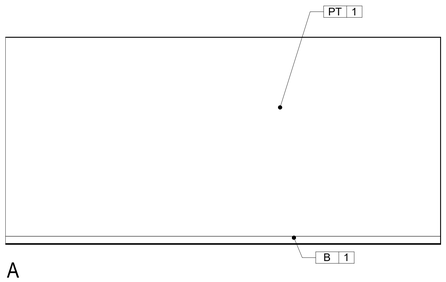

A

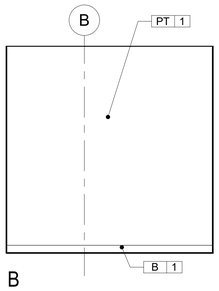

B

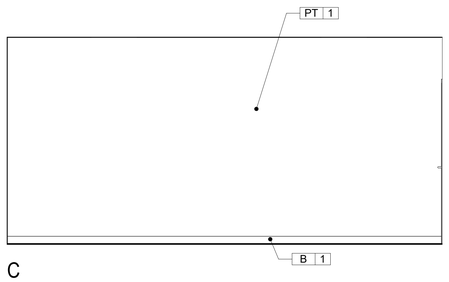

C

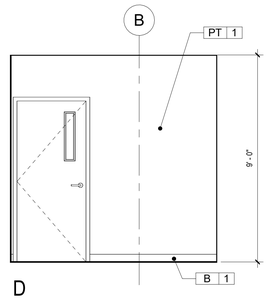

D

GEN. ASSGN. 146 ELEVATIONS | 3/8" = 1'-0" | 2

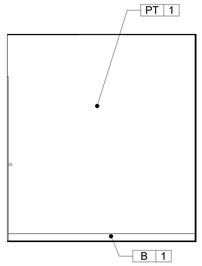

A

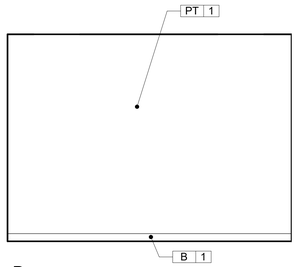

B

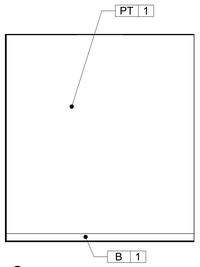

C

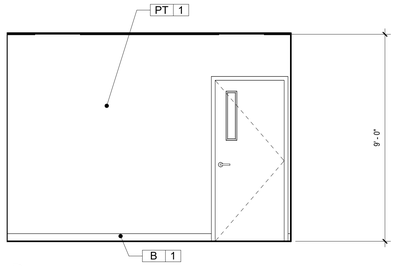

D

GEN. ASSGN. 147 ELEVATIONS | 3/8" = 1'-0" | 3

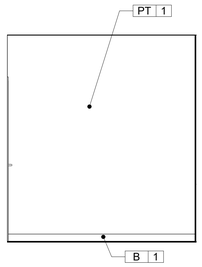

A

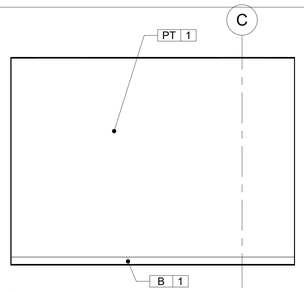

B

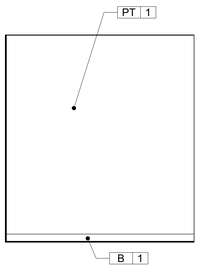

C

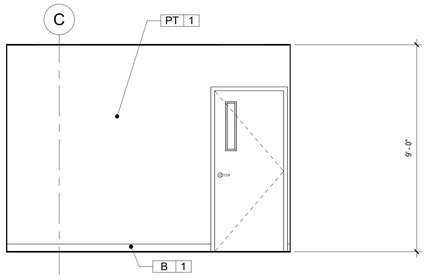

D

GEN. ASSGN. 148 ELEVATIONS | 3/8" = 1'-0" | 4

KEYNOTES

10.03 4' x 6' WHITEBOARD; FOR BACKING SEE 8/S020
26.03 WALL MOUNTED FLAT SCREEN MONITOR; FOR BACKING SEE 8/S020

LEGEND

PT 1 MATERIAL FINISH, SEE SHEET A602

DIVISION OF THE STATE ARCHITECT

IDENTIFICATION STAMP
DIV. OF THE STATE ARCHITECT
APP: 03-123218 INC:
REVIEWED FOR
SS ☑ FLS ☑ ACS ☑
DATE: 07/11/2024

MOORPARK COLLEGE

7075 CAMPUS RD
MOORPARK, CA 93021
TEL: (805) 378 - 1400

PROJECT TITLE AND SCHOOL LOCATION

ADMINISTRATION BUILDING SEISMIC REHABILITATION AND RENOVATION
7075 CAMPUS ROAD
MOORPARK, CA 91320

COMMISSIONED ARCHITECT

AMADOR

amador whittle architects, inc.
28328 AGOURA RD, 203 | AGOURA HILLS CA. 91301 | 805-558-4334

CONSULTANT

STAMPS/SEALS

LICENSED ARCHITECT
JEFF ANN AMADOR
C-22205
APRIL 30, 2025
DATE
STATE OF CALIFORNIA

1/9/24	DSA V2
8/23/23	DSA V1

SHEET TITLE:

INTERIOR ELEVATIONS

PROJECT NO: 21-MPC-040	PROJECT ARCH: Designer
DRAWN: Author	CHECKED: Checker

SHEET NUMBER:

A711

DATE: 1/9/24 | SHEET: ___ OF ___

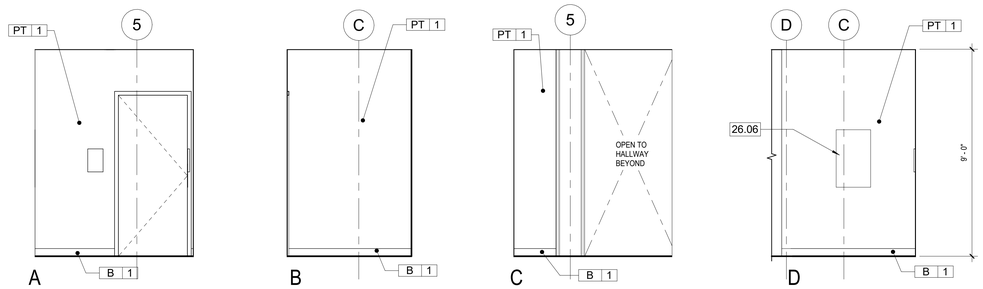

VEST. 153 ELEVATIONS | 3/8" = 1'-0" | 2

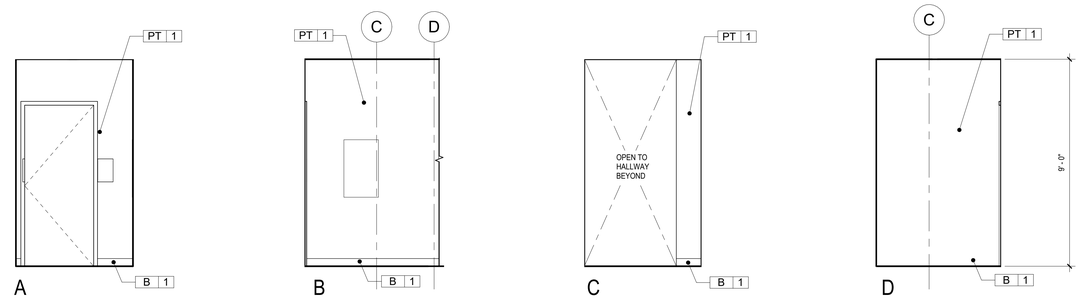

VESTIBULE 150 ELEVATIONS | 3/8" = 1'-0" | 1

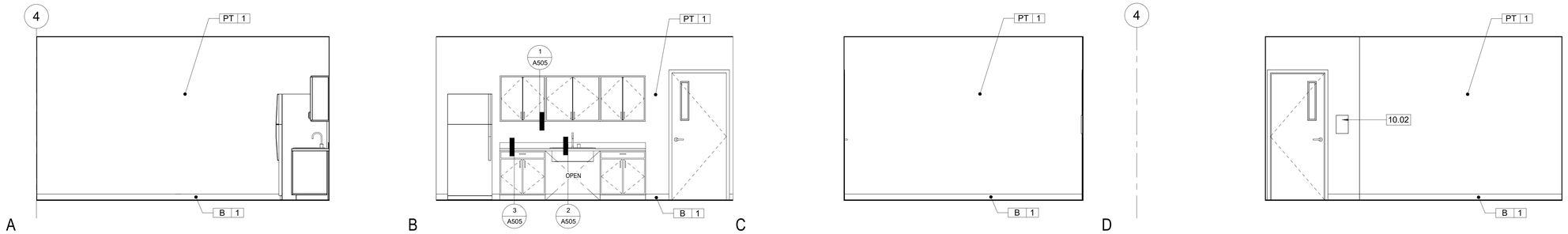

LOUNGE 156 ELEVATIONS | 3/8" = 1'-0" | 3

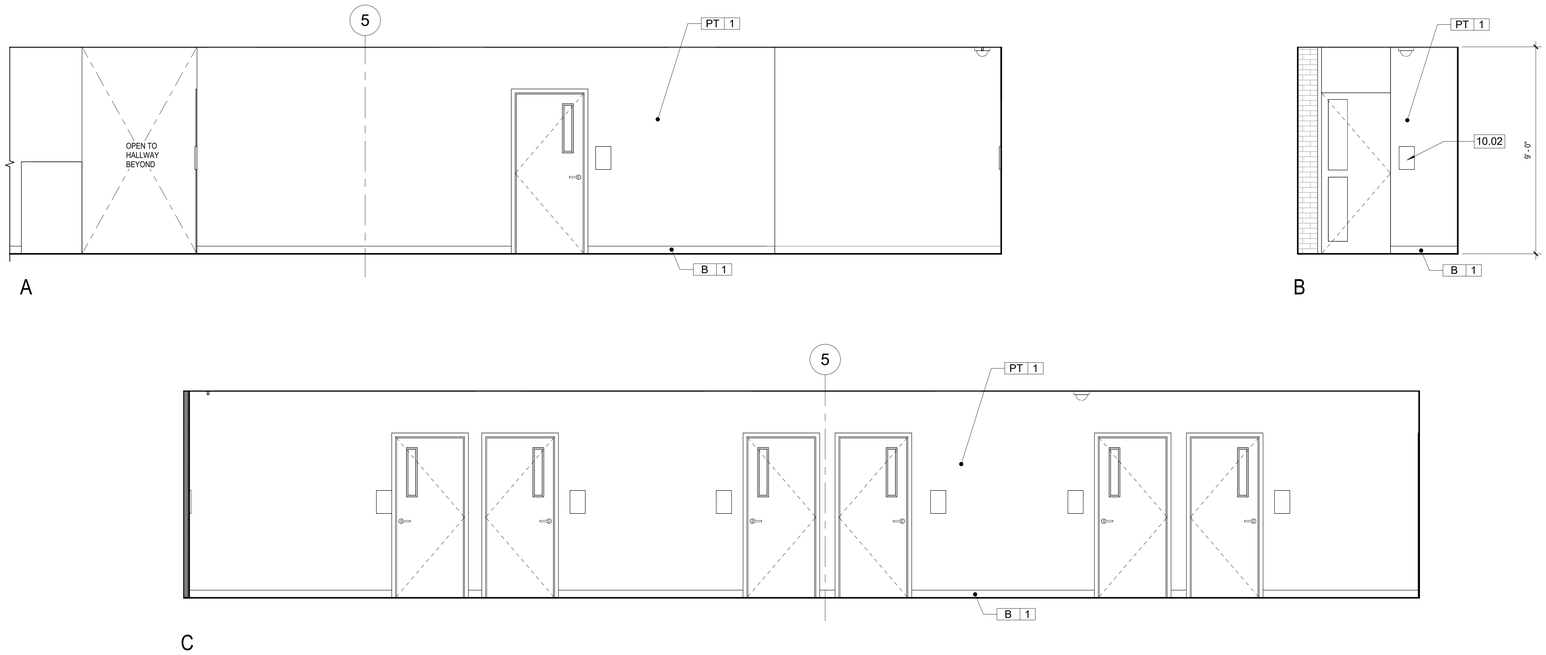

HALLWAY 157 ELEVATIONS | 3/8" = 1'-0" | 4

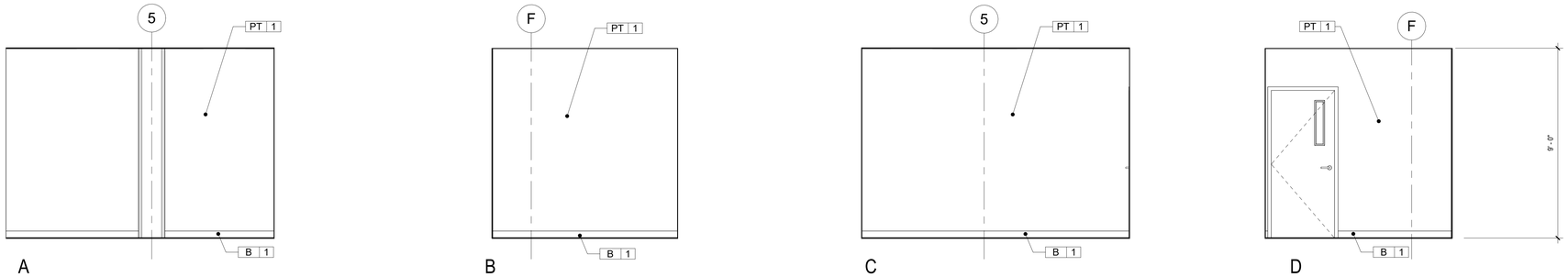

GEN. ASSGN. 158 ELEVATIONS | 3/8" = 1'-0" | 5

KEYNOTES

10.02	SIGNAGE: HEIGHT TO COMPLY WITH 11B-703.4, SEE SIGNAGE SCHEDULE ON SHT. A801
26.06	RECESSED ELEC. PANEL, SEE ELEC. DWGS.

LEGEND

PT 1	MATERIAL FINISH, SEE SHEET A602

DIVISION OF THE STATE ARCHITECT

IDENTIFICATION STAMP
DIV. OF THE STATE ARCHITECT
APP: 03-123218 INC:
REVIEWED FOR
SS ☑ FLS ☑ ACS ☑
DATE: 07/11/2024

MOORPARK COLLEGE

7075 CAMPUS RD
MOORPARK, CA 93021
TEL: (805) 378 - 1400

PROJECT TITLE AND SCHOOL LOCATION

ADMINISTRATION BUILDING SEISMIC REHABILITATION AND RENOVATION

7075 CAMPUS ROAD
MOORPARK, CA 91320

COMMISSIONED ARCHITECT

AMADOR

amador whittle architects, inc.
28328 AGOURA RD, 203 | AGOURA HILLS CA. 91301 | 805-558-4334

CONSULTANT

STAMPS/SEALS

LICENSED ARCHITECT
JEAN ANN AMADOR
C-22205
APRIL 30, 2025
DATE
STATE OF CALIFORNIA

1/9/24	DSA V2
8/23/23	DSA V1

SHEET TITLE:

INTERIOR ELEVATIONS

PROJECT NO: 21-MPC-040	PROJECT ARCH: Designer
DRAWN: Author	CHECKED: Checker

SHEET NUMBER:

A712

DATE: 1/9/24 | SHEET: ___ OF ___

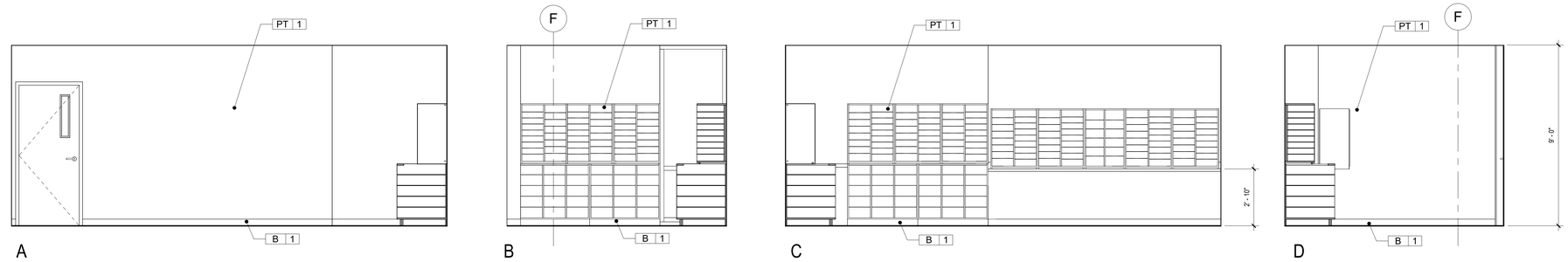

MAIL ROOM ELEVATIONS | 3/8" = 1'-0" | 1

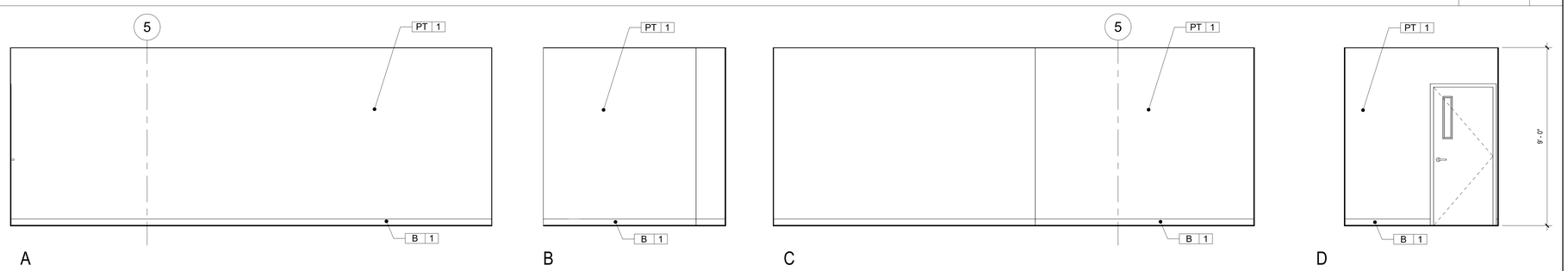

GEN. ASSGN. 160 ELEVATIONS | 3/8" = 1'-0" | 2

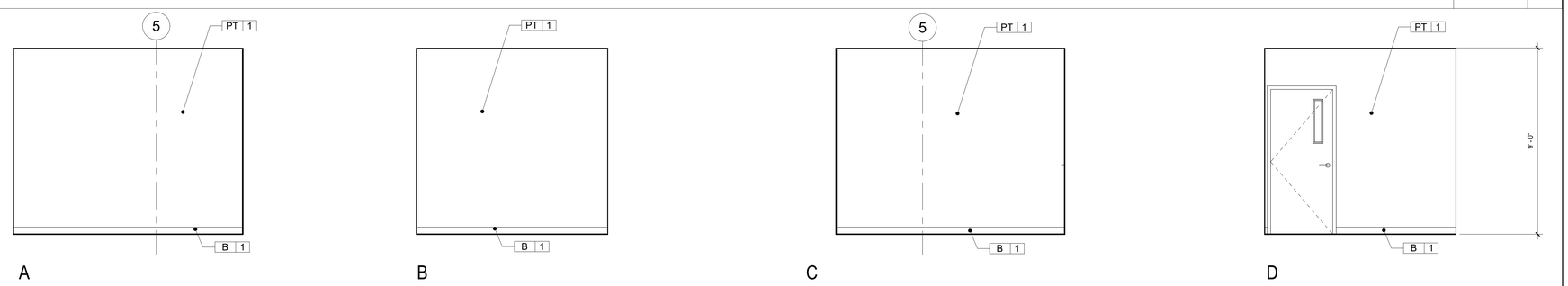

GEN. ASSGN. 161 ELEVATIONS | 3/8" = 1'-0" | 3

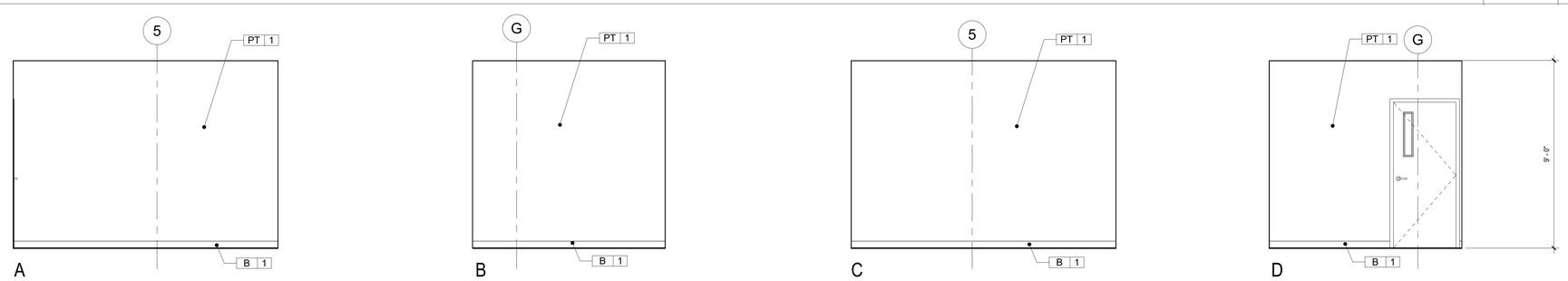

GEN. ASSGN. 164 ELEVATIONS | 3/8" = 1'-0" | 4

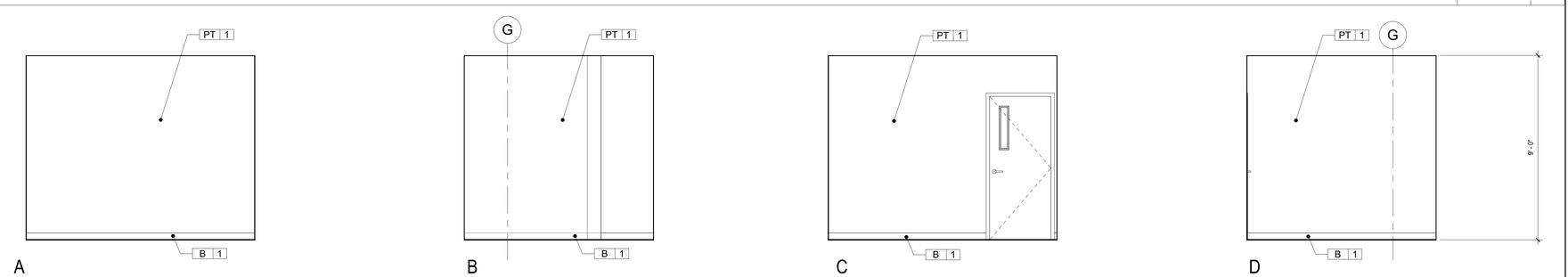

GEN. ASSGN. 165 ELEVATIONS | 3/8" = 1'-0" | 5

KEYNOTES

LEGEND

PT 1 — MATERIAL FINISH, SEE SHEET A602

DIVISION OF THE STATE ARCHITECT

IDENTIFICATION STAMP
DIV. OF THE STATE ARCHITECT
APP: 03-123218 INC:
REVIEWED FOR
SS ☑ FLS ☑ ACS ☑
DATE: 07/11/2024

MOORPARK COLLEGE

7075 CAMPUS RD
MOORPARK, CA 93021
TEL: (805) 378 - 1400

PROJECT TITLE AND SCHOOL LOCATION

ADMINISTRATION BUILDING SEISMIC REHABILITATION AND RENOVATION
7075 CAMPUS ROAD
MOORPARK, CA 91320

COMMISSIONED ARCHITECT

AMADOR

amador whittle architects, inc.
28328 AGOURA RD, 203 | AGOURA HILLS CA. 91301 | 805-558-4334

CONSULTANT

STAMPS/SEALS

LICENSED ARCHITECT
JEAN ANN AMADOR
C-22205
APRIL 30, 2025
DATE
STATE OF CALIFORNIA

1/9/24	DSA V2
8/23/23	DSA V1

SHEET TITLE:

INTERIOR ELEVATIONS

PROJECT NO: 21-MPC-040	PROJECT ARCH: Designer
DRAWN: Author	CHECKED: Checker

SHEET NUMBER:

A713

DATE: 1/9/24 | SHEET: ___ OF ___

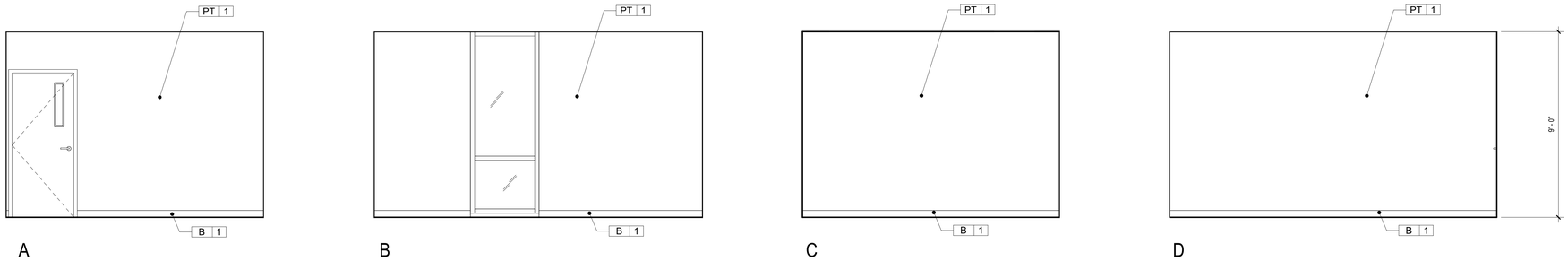

GEN. ASSGN. 166 ELEVATIONS | 3/8" = 1'-0" | 1

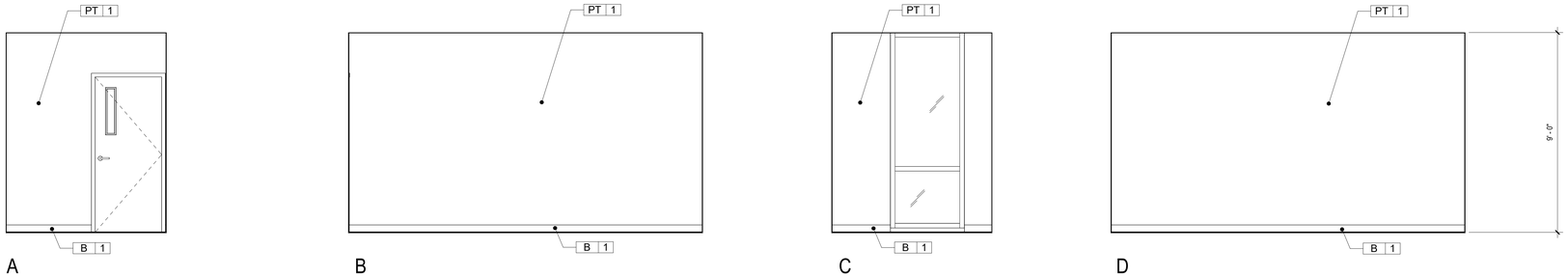

GEN. ASSGN. 167 ELEVATIONS | 3/8" = 1'-0" | 2

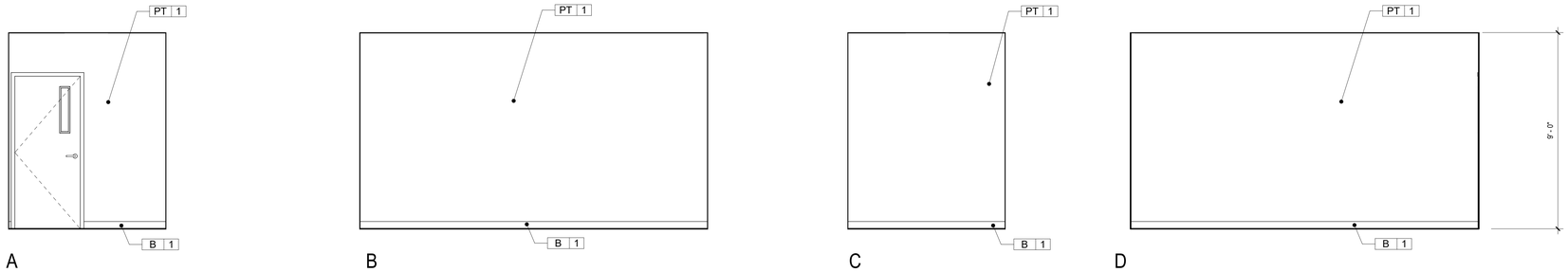

GEN. ASSGN. 168 ELEVATIONS | 3/8" = 1'-0" | 3

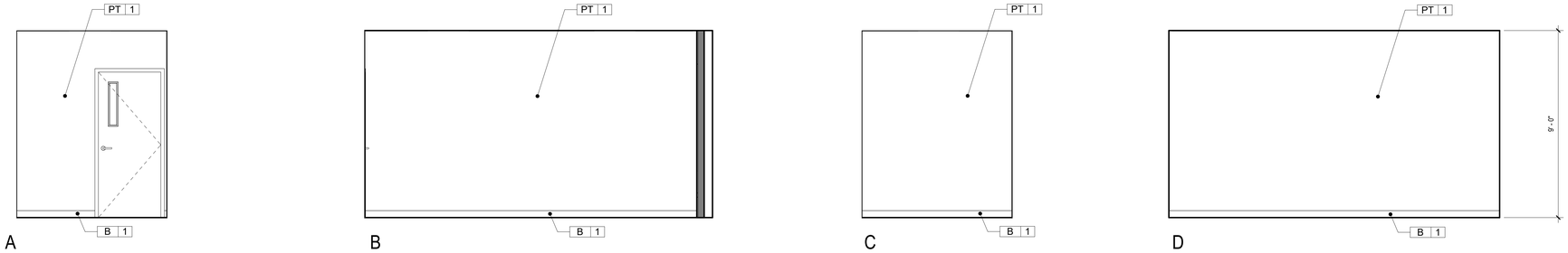

GEN. ASSGN. 169 ELEVATIONS | 3/8" = 1'-0" | 4

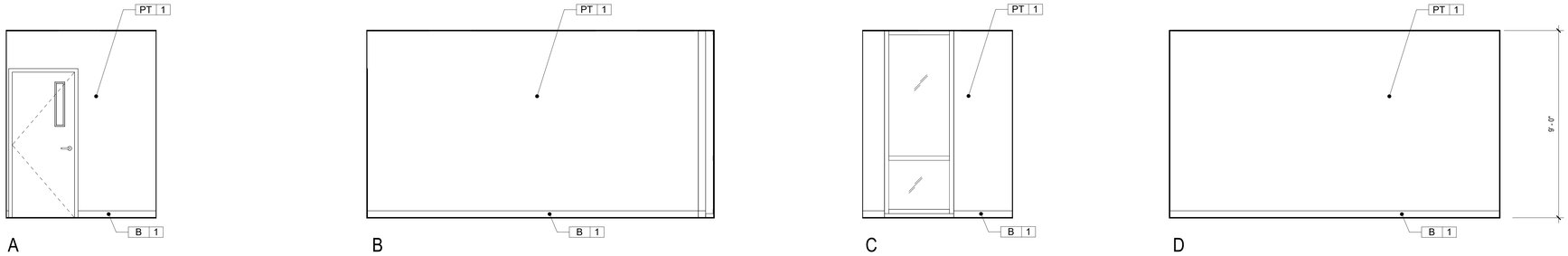

GEN. ASSGN. 170 ELEVATIONS | 3/8" = 1'-0" | 5

KEYNOTES

LEGEND

PT 1 — MATERIAL FINISH, SEE SHEET A602

DIVISION OF THE STATE ARCHITECT

IDENTIFICATION STAMP
DIV. OF THE STATE ARCHITECT
APP: 03-123218 INC:
REVIEWED FOR
SS ☑ FLS ☑ ACS ☑
DATE: 07/11/2024

MOORPARK COLLEGE

7075 CAMPUS RD
MOORPARK, CA 93021
TEL: (805) 378 - 1400

PROJECT TITLE AND SCHOOL LOCATION

ADMINISTRATION BUILDING SEISMIC REHABILITATION AND RENOVATION
7075 CAMPUS ROAD
MOORPARK, CA 91320

COMMISSIONED ARCHITECT

AMADOR

amador whittle architects, inc.
28328 AGOURA RD, 203 | AGOURA HILLS CA, 91301 | 805-558-4334

CONSULTANT

STAMPS/SEALS

LICENSED ARCHITECT
JAN ANN AMADOR
C-22205
APRIL 30, 2025
DATE
STATE OF CALIFORNIA

1	1/9/24	DSA V2
2	8/23/23	DSA V1
3		
4		

SHEET TITLE:

INTERIOR ELEVATIONS

PROJECT NO: 21-MPC-040	PROJECT ARCH: Designer
DRAWN: Author	CHECKED: Checker

SHEET NUMBER:

A714

DATE: 1/9/24 | SHEET: ___ OF ___

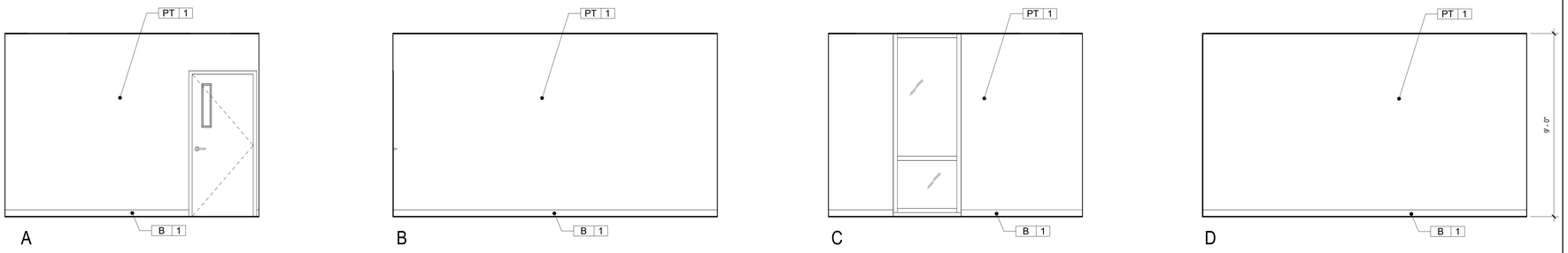

GEN. ASSGN. 171 ELEVATIONS | 3/8" = 1'-0" | 1

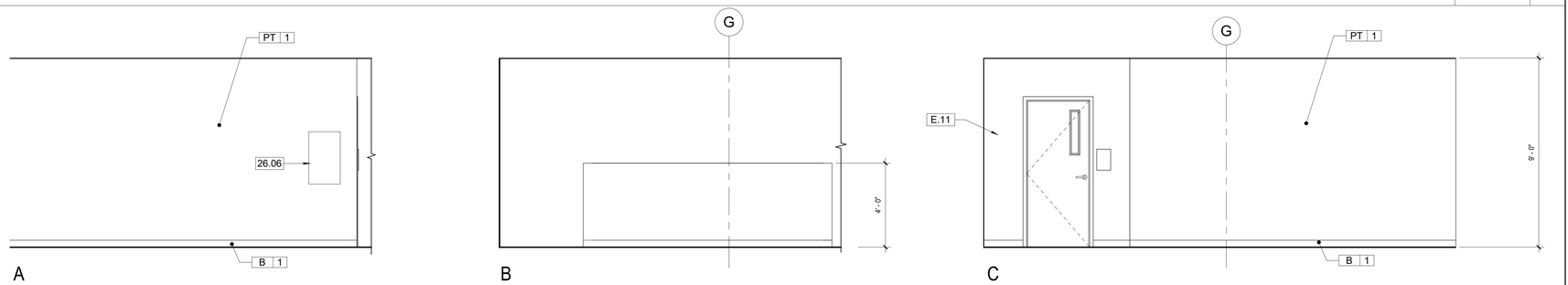

GEN. ASSGN. 172 ELEVATIONS | 3/8" = 1'-0" | 2

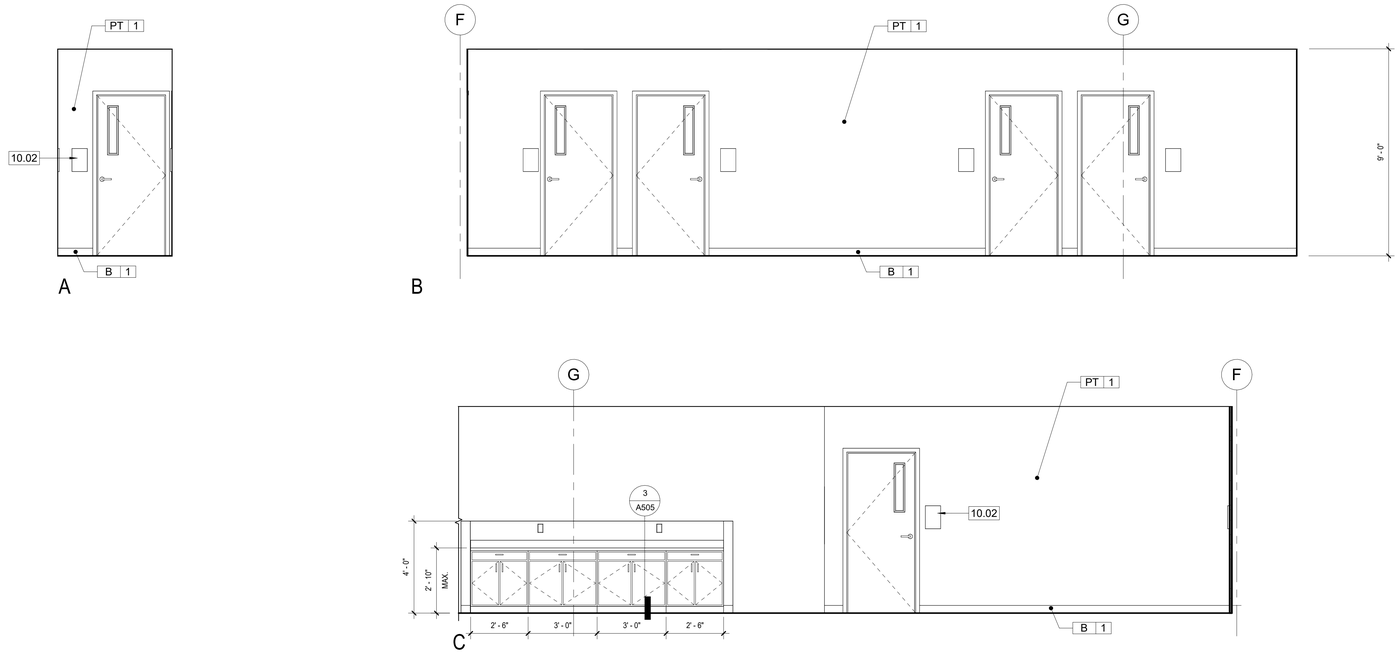

HALLWAY 174 ELEVATIONS | 3/8" = 1'-0" | 3

KEYNOTES

10.02	SIGNAGE: HEIGHT TO COMPLY WITH 11B-703.4, SEE SIGNAGE SCHEDULE ON SHT. A801
26.06	RECESSED ELEC. PANEL, SEE ELEC. DWGS.
E.11	(E) MASONRY WALL

LEGEND

PT 1	MATERIAL FINISH, SEE SHEET A602

DIVISION OF THE STATE ARCHITECT

IDENTIFICATION STAMP
DIV. OF THE STATE ARCHITECT
APP: 03-123218 INC:
REVIEWED FOR
SS ☑ FLS ☑ ACS ☑
DATE: 07/11/2024

MOORPARK COLLEGE

7075 CAMPUS RD
MOORPARK, CA 93021
TEL: (805) 378 - 1400

PROJECT TITLE AND SCHOOL LOCATION

ADMINISTRATION BUILDING SEISMIC REHABILITATION AND RENOVATION

7075 CAMPUS ROAD
MOORPARK, CA 91320

COMMISSIONED ARCHITECT

AMADOR

amador whittle architects, inc.
28328 AGOURA RD, 203 | AGOURA HILLS CA. 91301 | 805-558-4334

CONSULTANT

STAMPS/SEALS

LICENSED ARCHITECT
JEAN ANN AMADOR
C-22205
APRIL 30, 2025
DATE
STATE OF CALIFORNIA

1/9/24	DSA V2
8/23/23	DSA V1

SHEET TITLE:

INTERIOR ELEVATIONS

PROJECT NO: 21-MPC-040	PROJECT ARCH: Designer
DRAWN: Author	CHECKED: Checker

SHEET NUMBER:

A715

DATE: 1/9/24 | SHEET: ___ OF ___

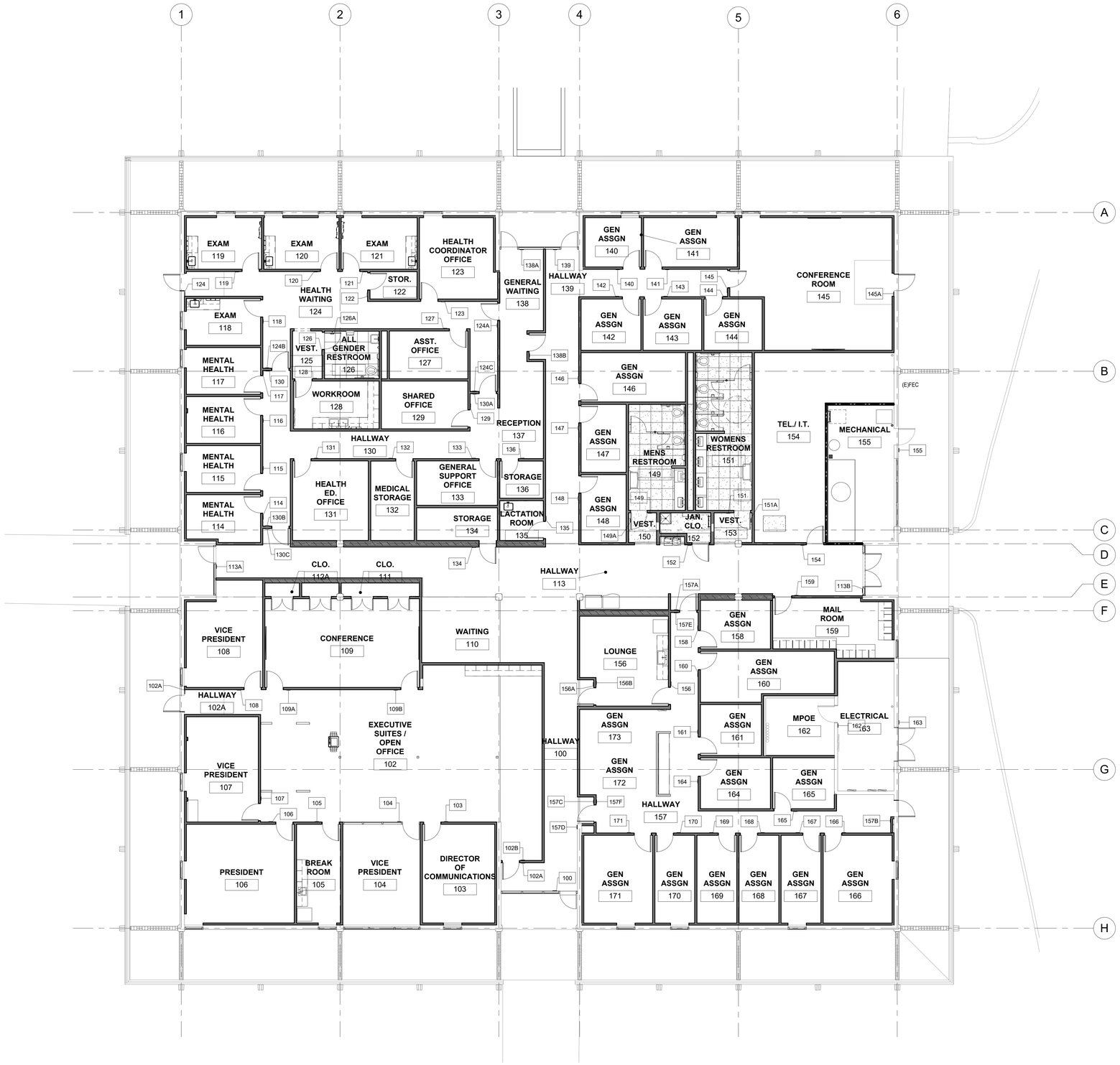

SIGNAGE PLAN | 1/8" = 1'-0" | 1

SIGNAGE SCHEDULE

SIGN NO.	SIGN - TEXT	DETAIL
100	EXIT	9/A802
102A	ADMINISTRATION OFFICES	8/A802
102A	EXIT	9/A802
102B	EXIT	9/A802
103	103	8A/A802
104	104	8A/A802
105	BREAK ROOM 105	8/A802
106	106	8A/A802
107	107	8A/A802
108	108	8A/A802
109A	CONFERENCE ROOM 109	8/A802
109B	CONFERENCE ROOM 109	8/A802
113A	EXIT	9/A802
113B	EXIT	9/A802
114	114	8A/A802
115	EXAM ROOM 115	8/A802
116	116	8A/A802
117	117	8A/A802
118	EXAM ROOM 118	8/A802
119	EXAM ROOM 119	8/A802
120	EXAM ROOM 120	8/A802
121	EXAM ROOM 121	8/A802
122	STORAGE 122	8/A802
123	123	8A/A802
124	EXIT	9/A802
124A	EXIT	9/A802
124B	MENTAL HEALTH SERVICES	8/A802
124C	MENTAL HEALTH SERVICES	8/A802
126	RESTROOM	6-C6/A802
126A	RESTROOM	6-C3/A802
127	127	8A/A802
128	WORKROOM 128	8/A802
129	129	8A/A802
130	HEALTH WAITING	8/A802
130A	HEALTH WATING	8/A802
130B	EXIT	9/A802
130C	HEALTH SERVICES	8/A802
131	131	8A/A802
132	MEDICAL STORAGE 132	8/A802
133	133	8A/A802
134	STORAGE	8/A802
135	LACTATION ROOM	8/A802
136	STORAGE	8/A802
138A	EXIT	9/A802
138B	HEALTH SERVICES	8/A802
139	EXIT	9/A802
140	140	8A/A802
141	141	8A/A802
142	142	8A/A802
143	143	8A/A802
144	144	8A/A802
145	CONFERENCE ROOM 145	8/A802
145A	EXIT	9/A802
146	146	8A/A802
147	147	8A/A802
148	148	8A/A802
149	MENS RESTROOM	6-C4/A802
149A	MENS RESTROOM	6-C1/A802
151	WOMENS RESTROOM	6-C5/A802
151A	WOMENS RESTROOM	6-C2/A802
152	JANITOR CLOSET	8/A802
154	TEL./IT 154	8/A802
155	MECHANICAL 155 FIRE SPRINKLER SYSTEM RISER AND AIR CONDITIONING CONTROLS	8/A802
156	LOUNGE 156	8/A802
156A	LOUNGE 156	8/A802
156B	EXIT	9/A802
157A	OFFICES	8/A802
157B	EXIT	9/A802
157C	EXIT	9/A802
157D	OFFICES	8/A802
157E	EXIT	8/A802
157F	EXIT	8/A802
158	158	8A/A802
159	MAIL ROOM 159	8/A802
160	160	8A/A802
161	161	8A/A802
162	TEL./IT ROOM 162	8/A802
163	ELECTRICAL ROOM 163 FIRE ALARM CONTROL PANEL AND AIR CONDITIONING CONTROLS	8/A802
164	164	8A/A802
165	165	8A/A802
166	166	8A/A802
167	167	8A/A802
168	168	8A/A802
169	169	8A/A802
170	170	8A/A802
171	171	8A/A802

LEGEND

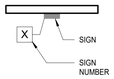

NOTES

1. SEE SHEET A802 FOR SIGNAGE DETAILS INCLUDING CHARACTERS & BRAILLE SIGN DETAIL.
2. SEE GENERAL ACCESSIBILITY NOTES ON SHEET G002 FOR ADDITIONAL REQUIREMENTS.
3. SIGNS SHALL BE LOCATED ADJACENT TO EXIT ACCESS DOORS UNLESS NOTED OTHERWISE.
4. WHEN SIGNS ARE USED TO IDENTIFY PERMANENT ROOMS AND SPACES OF BUILDINGS, BRAILLE MUST BE INCLUDED AS PART OF THAT SIGNAGE AS REQUIRED BY CBC 11B-216.2

DIVISION OF THE STATE ARCHITECT

IDENTIFICATION STAMP
DIV. OF THE STATE ARCHITECT
APP: 03-123218 INC:
REVIEWED FOR
SS ☑ FLS ☑ ACS ☑
DATE: 07/11/2024

MOORPARK COLLEGE

7075 CAMPUS RD
MOORPARK, CA 93021
TEL: (805) 378 - 1400

PROJECT TITLE AND SCHOOL LOCATION

ADMINISTRATION BUILDING SEISMIC REHABILITATION AND RENOVATION

7075 CAMPUS ROAD
MOORPARK, CA 91320

COMMISSIONED ARCHITECT

AMADOR

amador whittle architects, inc.
28328 AGOURA RD, 203 | AGOURA HILLS CA, 91301 | 805-558-4334

CONSULTANT

STAMPS/SEALS

LICENSED ARCHITECT
LEAH ANN AMADOR
C-32205
APRIL 30, 2025
DATE
STATE OF CALIFORNIA

1/9/24	DSA V2	
8/23/23	DSA V1	

SHEET TITLE:

SIGNAGE PLAN & SCHEDULE

PROJECT NO: 21-MPC-040
PROJECT ARCH: Designer
DRAWN: Author
CHECKED: Checker
SHEET NUMBER:

A801

DATE: 1/9/24
SHEET: ___ OF ___

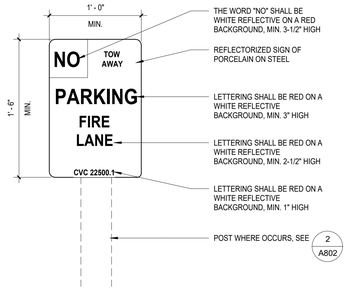

(E) FIRE LANE SIGN ALONG FIRE LANE | 1 1/2" = 1'-0" | 12

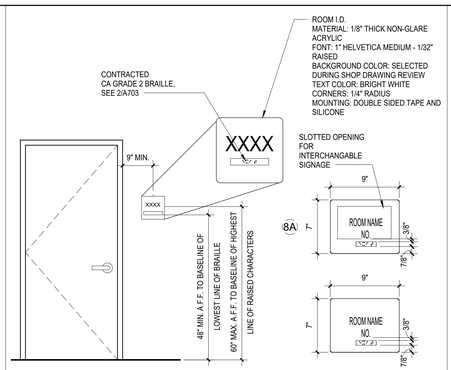

ROOM I.D. SIGN | 1 1/2" = 1'-0" | 8

(A) CHARACTER TYPE: CHARACTERS ON SIGNS SHALL BE RAISED 1/32" (0.794 MM) MINIMUM AND SHALL BE SANS SERIF UPPERCASE CHARACTERS ACCOMPANIED BY GRADE 2 BRAILLE (SEE NOTE E BELOW). CBC 11B-703.2

(B) CHARACTER SIZE: RAISED CHARACTERS SHALL BE A MINIMUM OF 5/8" (15.9 MM) AND A MAXIMUM OF 2 INCHES (51 MM) HIGH BASED ON THE HEIGHT OF THE UPPERCASE LETTER "I". CBC 11B-703.2.5

(C) FINISH AND CONTRAST: CONTRAST BETWEEN CHARACTERS, PICTOGRAMS, SYMBOLS AND THEIR BACKGROUND MUST HAVE A NON-GLARE FINISH. CHARACTERS, PICTOGRAMS AND SYMBOLS SHALL CONTRAST WITH THEIR BACKGROUND, EITHER LIGHT ON A DARK BACKGROUND OR DARK ON A LIGHT BACKGROUND. CBC 11B-703.5.1, 11B-703.6.2, 11B-703.7.1

(D) PROPORTIONS: CHARACTERS ON SIGNS SHALL BE SELECTED FROM FONTS WHERE THE WIDTH OF THE UPPERCASE LETTER "O" IS 60 % MINIMUM AND 110% MAXIMUM OF THE HEIGHT OF THE UPPERCASE LETTER "I". CBC 11B-703.2.4, 11B-703.5.4. STROKE THICKNESS OF THE UPPERCASE LETTER "I" SHALL BE 15% MAXIMUM OF THE HEIGHT OF THE CHARACTER FOR RAISED CHARACTERS AND 10% MINIMUM AND 20% MAXIMUM OF THE HEIGHT OF THE CHARACTER FOR VISUAL CHARACTERS. CBC 11B-703.2.6, 11B-703.5.7

AFTER CHOOSING A TYPESTYLE TO TEST, BEGIN BY PRINTING THE LETTERS "I" AND "O" AT 1 INCH HIGH. PLACE THE TEMPLATE'S 1:1 SQUARE OVER THE "O". IF THE CHARACTER IS NOT WIDER THAN 1 INCH, NOR NARROWER THAN THE 3:5 RECTANGLE, THE PROPORTIONS ARE CORRECT. USE THE 15% OR 10% RECTANGLE TO DETERMINE IF THE STROKE OF THE "I" IS TOO BROAD, AND THE 10% RECTANGLE TO SEE IF IT IS TOO NARROW. IF ALL THE TESTS ARE PASSED, THE TYPESTYLE IS COMPLIANT WITH PROPORTION CODE.

TEMPLATE FOR CHECKING CHARACTER AND STROKE WIDTH TO HEIGHT PROPORTIONS:

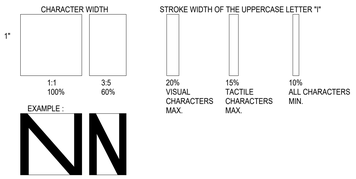

(E) BRAILLE: CONTRACTED CALIFORNIA GRADE 2 BRAILLE SHALL BE USED WHEREVER BRAILLE IS REQUIRED IN OTHER PORTIONS OF THESE STANDARDS. DOTS SHALL BE 1/10 INCH (2.5 MM) ON CENTERS IN EACH CELL WITH 0.30 INCH (7.6 MM) SPACE BETWEEN CELLS, MEASURED FROM THE SECOND COLUMN OF DOTS IN THE FIRST CELL TO THE FIRST COLUMN OF DOTS IN THE SECOND CELL. DOTS SHALL BE RAISED A MINIMUM OF 1/40 INCH (0.635 MM) ABOVE THE BACKGROUND AND 0.037" MAXIMUM. CBC 11B-703.3

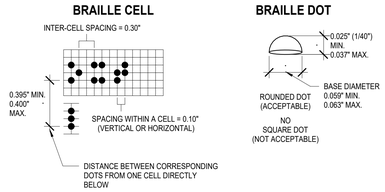

INDIVIDUAL BRAILLE DOTS SHALL EACH BE DISTINCT & SEPARATE. EACH DOT SHALL BE ROUNDED OR DOMED IN LIEU OF SQUARE SIDED & FLAT TOPPED. DOTS WITH STRAIGHT SIDES AND FLAT TOPS ARE NOT READABLE FOR MANY BRAILLE USERS.

CHARACTERS & BRAILLE SIGN DETAIL | 6" = 1'-0" | 7

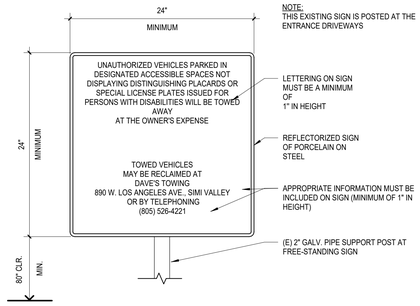

VEHICLE TOW AWAY SIGN | 1 1/2" = 1'-0" | 4

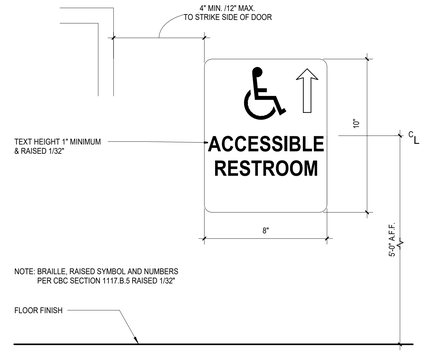

ACCESSIBLE RR DIRECTIONAL SIGN | 3" = 1'-0" | 1

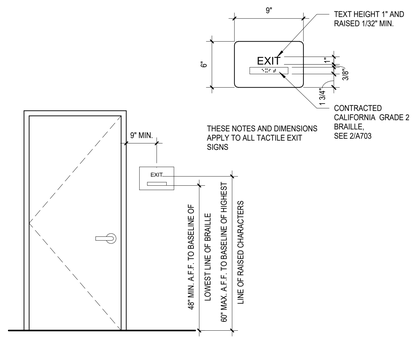

TACTILE EXIT SIGN | 1 1/2" = 1'-0" | 9

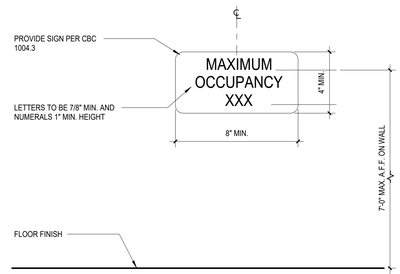

OCCUPANT LOAD SIGN | 3" = 1'-0" | 5

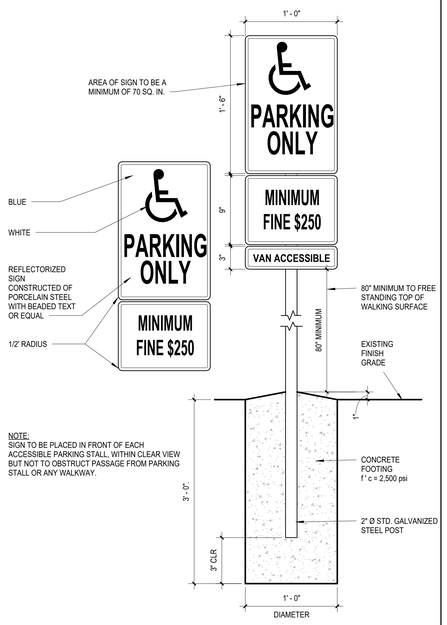

ADA PARKING STALL SIGN | 1 1/2" = 1'-0" | 2

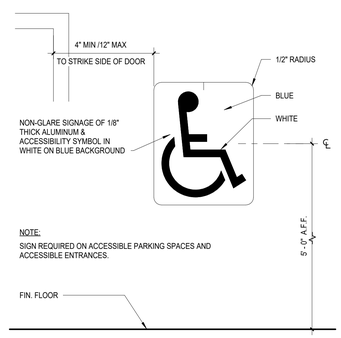

INTERNATIONAL SYMBOL OF ACCESSIBILITY (ISA) SIGN | 3" = 1'-0" | 10

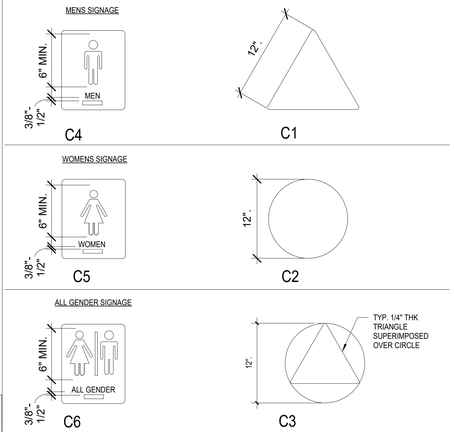

RESTROOM WALL SIGNS

NOTE: RESTROOM WALL SIGNS ARE TO BE MOUNTED ON LATCH SIDE OF DOOR.

RESTROOM DOOR SYMBOLS

NOTE: RESTROOM DOOR SIGNS ARE TO BE CENTERED ON DOOR.

NOTES ON RESTROOM SIGNAGE:

1. ALL RESTROOM DOOR SIGNS SHALL BE MOUNTED AT 58" MINIMUM AND 60" MAXIMUM ABOVE FINISH FLOOR TO CENTER OF SIGN.
2. ATTACH SIGN USING (3) THREE FLATHEAD WOOD SCREWS, COUNTER-SUNK AND ADHESIVE.
3. ISA SYMBOL REQUIRED ON DOOR, WALL OR SEPARATE SIGN, NOT REQUIRED TO BE RAISED FROM BACKGROUND.
4. GEOMETRIC SYMBOL DOOR SIGNS FOR RESTROOMS MUST CONTRAST WITH DOOR, DARK ON LIGHT OR LIGHT ON DARK. FOR UNISEX DOOR SIGNS, TRIANGLE TO CONTRAST WITH CIRCLE, WHICH MUST CONTRAST WITH THE DOOR, 70% MINIMUM LIGHT/DARK. ENTIRE BACKGROUND COLOR OF GEOMETRIC SYMBOL SIGN MUST CONTRAST WITH DOOR. IT IS NOT ALLOWED TO HAVE A THIN CONTRASTING BORDER AROUND SYMBOL, WITH REMAINDER OF SIGN BACKGROUND IN A NON-CONTRASTING COLOR. ISA, CONTRASTING WITH BACKGROUND, MAY BE ON SIGN.
5. EDGES OF SIGNS SHALL BE ROUNDED, CHAMFERED OR EASED. CORNERS OF SIGNS SHALL HAVE A MINIMUM RADIUS OF 1/8 INCH.

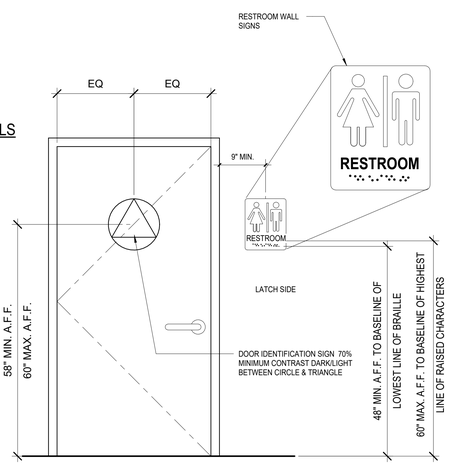

RESTROOM DOOR SIGN ELEVATION

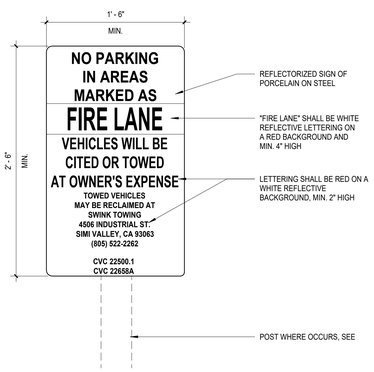

(E) FIRE LANE SIGN AT ENTRY | 1 1/2" = 1'-0" | 11

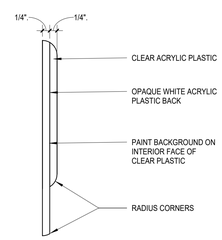

DOOR SIGN SECTION

RESTROOM SIGNAGE (C1 thru C6) | 1" = 1'-0" | 6

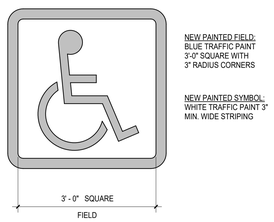

ISA PARKING STALL PAINTED SYMBOL | 3/4" = 1'-0" | 3

DIVISION OF THE STATE ARCHITECT

IDENTIFICATION STAMP
DIV. OF THE STATE ARCHITECT
APP: 03-123218 INC:
REVIEWED FOR
SS ☑ FLS ☑ ACS ☑
DATE: 07/11/2024

MOORPARK COLLEGE

7075 CAMPUS RD
MOORPARK, CA 93021
TEL: (805) 378 - 1400

PROJECT TITLE AND SCHOOL LOCATION

ADMINISTRATION BUILDING SEISMIC REHABILITATION AND RENOVATION

7075 CAMPUS ROAD
MOORPARK, CA 91320

COMMISSIONED ARCHITECT

AMADOR

amador whittle architects, inc.
28328 AGOURA RD, 203 | AGOURA HILLS CA. 91301 | 805-558-4334

CONSULTANT

STAMPS/SEALS

LICENSED ARCHITECT
JUAN ANN AMADOR
C 22205
APRIL 30, 2025
DATE
STATE OF CALIFORNIA

△		
△		
△		
△		
	1/9/24	DSA V2
	8/23/23	DSA V1

SHEET TITLE:

SIGNAGE DETAILS

PROJECT NO: 21-MPC-040	PROJECT ARCH: Designer
DRAWN: Author	CHECKED: Checker
SHEET NUMBER: A802	
DATE: 1/9/24	SHEET: ___ OF ___

CONCRETE

1. CONCRETE IS REINFORCED AND CAST-IN-PLACE UNLESS NOTED OTHERWISE. WHERE REINFORCING IS NOT SPECIFICALLY SHOWN OR WHERE DETAILS ARE NOT GIVEN, PROVIDE REINFORCING SIMILAR TO THAT SHOWN FOR SIMILAR CONDITIONS, SUBJECT TO REVIEW BY THE OWNER'S REPRESENTATIVE.

2. ALL STRUCTURAL CONCRETE SHALL BE DESIGNED BY THE CONCRETE MIX ENGINEER FOR THE PROJECT WITH CRITERIA :

   A. ALL CONCRETE U.N.O.: 3000 PSI NORMAL WEIGHT

3. ALL STRUCTURAL CONCRETE MIXES SHALL BE DESIGNED BY AN APPROVED LABORATORY AND SHALL BE STAMPED AND SIGNED BY A CIVIL ENGINEER LICENSED IN CALIFORNIA.

4. CONCRETE MIXES SHALL BE PREPARED WITH TYPE II/V PORTLAND CEMENT CONFORMING TO ASTM C150. CONCRETE MIX DESIGNS CONTAINING FLY ASH MAY BE USED WHERE CONCRETE IS NOT VISUALLY EXPOSED. FLY ASH SHALL CONFORM WITH ASTM C618 AND MAY REPLACE UP TO 20% PORTLAND CEMENT BY VOLUME.

5. NORMAL WEIGHT CONCRETE AGGREGATES SHALL CONFORM TO ASTM C33. LIGHT WEIGHT CONCRETE AGGREGATES SHALL CONFORM TO ASTM C330.

6. NO MORE THAN ONE GRADE OF CONCRETE SHALL BE ON THE JOB SITE AT ANY ONE TIME.

7. THOROUGHLY CLEAN AND ROUGHEN ALL HARDENED CONCRETE AND MASONRY SURFACES TO RECEIVE NEW CONCRETE. INTERFACE SHALL BE ROUGHENED TO A FULL AMPLITUDE OF 1/4" UNLESS NOTED OTHERWISE.

8. KEY AND DOWEL POUR JOINTS AS SHOWN ON THE PLANS. ANY DEVIATION FROM POUR JOINTS SHOWN ON THE PLANS MUST BE APPROVED BY THE OWNER'S REPRESENTATIVE.

9. NON-SHRINK CEMENT GROUT SHALL HAVE A MINIMUM 28 DAY COMPRESSIVE STRENGTH OF 5000 PSI.

10. DEFECTIVE CONCRETE (VOIDS, ROCK POCKETS, HONEYCOMBS, CRACKING, ETC.) SHALL BE REMOVED AND REPLACED AS DIRECTED BY THE OWNER'S REPRESENTATIVE.

FOUNDATIONS

1. THE DESIGN OF THE FOUNDATION SYSTEM IS BASED UPON THE REPORT "GEOHAZARDS STUDY ADMINISTRATION BUILDING MOORPARK COLLEGE, MOORPARK, CA" BY GEOTECHNIQUES PROJECT NUMBER 1003.044, DATED AUGUST 7, 2023. PROJECT IS NOT IN A SPECIAL HAZARD ZONE FOR FLOODS, GROUND RUPTURE, LIQUEFACTION, TSUNAMI, OR SEICHE.

2. THE ALLOWABLE SOIL BEARING PRESSURE IS 3,000 PSF, 2'-0" MIN. BELOW FINISH FLOOR (SOILS VALUES FROM ORIGINAL CONSTRUCTION OF THE BUILDING REFERENCED BY GEOTECHNIQUES REPORT FOR USE IN SEISMIC RETROFIT)

3. REMOVE LOOSE SOIL AND STANDING WATER FROM FOUNDATION EXCAVATIONS PRIOR TO PLACING CONCRETE. THE GEOTECHNICAL ENGINEER SHALL INSPECT AND APPROVE ALL EXCAVATIONS, SOIL COMPACTION WORK PRIOR TO PLACEMENT OF ANY REBAR OR CONCRETE, SHORING INSTALLATIONS, BACKFILL MATERIALS AND BACK FILLING PROCEDURES.

4. LOCATE AND PROTECT EXISTING UTILITIES TO REMAIN DURING AND/OR AFTER CONSTRUCTION.

5. REMOVE ABANDONED FOOTINGS, UTILITIES, ETC. WHICH INTERFERE WITH NEW CONSTRUCTION, UNLESS OTHERWISE INDICATED.

6. NOTIFY THE OWNER'S REPRESENTATIVE IF ANY BURIED STRUCTURES NOT INDICATED, SUCH AS CESSPOOLS, CISTERNS, FOUNDATIONS, ETC., ARE FOUND.

7. THE CONTRACTOR IS SOLELY RESPONSIBLE FOR EXCAVATION PROCEDURES INCLUDING LAGGING, SHORING, UNDERPINNING AND PROTECTION OF EXISTING CONSTRUCTION.

MECHANICAL & ADHESIVE ANCHORS

1. EPOXY ANCHORS AND DOWELS INSTALLED INTO CONCRETE:
   A. "PURE110+" BY DeWALT (COLA RR# 26035, ESR#3298)
   B. "SET-3G" BY SIMPSON STRONG TIE (COLA RR#4057, ESR#4057)
   C. "HIT-RE 500-V3" BY HILTI, INC. (COLA RR#26028, ESR#3814)

2. EPOXY ANCHORS AND DOWELS INSTALLED INTO GROUT-FILLED MASONRY UNITS:
   A. "AC100+GOLD" BY DeWALT (COLA RR# 26049, ESR# 3200)
   B. "SET-XP" BY SIMPSON STRONG TIE (COLA RR#25965, IAPMO#265)
   C. HILTI HY-70 (ICC ESR-2682, LARR#25980)

3. EXPANSION ANCHORS INSTALLED INTO CONCRETE:
   A. "POWER-STUD+SD2" BY DeWALT (COLA RR#25831, ESR#2502)
   B. "STRONG BOLT2" BY SIMPSON STRONG-TIE (COLA RR#25891, ESR#3037)
   C. "KWIK BOLT TZ2" BY HILTI, INC. (COLA RR#25701, ESR#4266)

5. EXPANSION ANCHORS INSTALLED INTO GROUT-FILLED MASONRY UNITS:
   A. "STRONG BOLT 2" BY SIMPSON STRONG-TIE (COLA RR#25936, IAPMO#240)

6. SCREW ANCHORS INSTALLED INTO CONCRETE:
   A. SIMPSON TITEN HD (LARR#25741, ICC ESR-2713)
   B. HILTI KH-EZ (HUS) (LARR#25897, ICC ESR-3027)
   C. DEWALT WEDGE-BOLT (LARR# 25808, ICC ESR-2526)

7. ADHESIVE ANCHORS: GRADE 36 THREADED ROD (F1554 GRADE 36, OR A36, OR A307-S1) WITH ASTM A 563 GRADE A NUTS AND ANSI B18.22.1 TYPE A WASHERS, UNLESS NOTED OTHERWISE.

8. ADHESIVE DOWELS: ASTM A615 (OR ASTM A706) GRADE 60 REINFORCING STEEL.

9. ALL ANCHORS SHALL BE INSTALLED IN ACCORDANCE WITH ICC-ES REPORT AND COLA REPORT AND MANUFACTURERS RECOMMENDATIONS.

10. UNLESS NOTED OTHERWISE, PROVIDE MINIMUM EMBEDMENT OF ANCHORS PER ICC-ES REPORT, COLA REPORTS & MANUFACTURERS RECOMMENDATIONS.

11. CONFIRM FINAL ANCHOR LOCATIONS PRIOR TO FABRICATING PLATES, MEMBERS, OR OTHER STEEL ASSEMBLIES ATTACHED WITH MECHANICAL OR ADHESIVE ANCHORS. AT CONTRACTOR OPTION, OVERSIZED HOLES AND WELDED PLATE WASHERS CAN BE USED IN LIEU OF STANDARD DIAMETER HOLES. SIZE & WELD

12. PRIOR TO ALL DRILLING OR CORING, THE CONTRACTOR SHALL (1) VERIFY THE EXISTING CONCRETE OR MASONRY THICKNESS TO PREVENT DAMAGE TO THE OPPOSITE FACE OF CONCRETE AND MAINTAIN 1-1/2" CLEAR COVER U.N.O., AND (2) IDENTIFY EXISTING REINFORCING LOCATIONS BY PACHHOMETER, PROBING, CHIPPING, ETC. TO AVOID DAMAGE EXISTING REINFORCING.

13. IF REINFORCEMENT IS ENCOUNTERED DURING DRILLING, ABANDON AND SHIFT THE HOLE LOCATION TO AVOID THE REINFORCEMENT. PROVIDE A MINIMUM OF 2 ANCHOR DIAMETERS OR 1 INCH, WHICHEVER IS LARGER, OF SOUND CONCRETE BETWEEN THE DOWEL AND THE ABANDONED HOLE. FILL THE ABANDONED HOLE WITH NON-SHRINK GROUT. IF THE ANCHOR OR DOWEL MAY NOT BE SHIFTED AS NOTED ABOVE, THE ENGINEER WILL DETERMINE A NEW LOCATION.

14. TEST ANCHORS NO SOONER THAN 24 HOURS AFTER INSTALLATION.

15. ADHESIVE ANCHORS SHALL BE INSTALLED IN CONCRETE OR GROUT HAVING A MINIMUM AGE OF 21 DAYS AT THE TIME OF ANCHOR INSTALLATION.

16. FOR EXTERIOR AND FOR EXPOSED APPLICATIONS PROVIDE HOT DIP GALVANIZED OR STAINLESS STEEL ANCHORS.

TESTING FOR MECHANICAL AND ADHESIVE ANCHORS

1. POST INSTALLED ANCHOR TEST FREQUENCY (UNLESS SPECIFICALLY NOTED):

A. SHEAR WALL SILL PLATE SHEAR ANCHORS:	10%
B. ANCHORS AT MECHANICAL UNITS:	50%
C. EPOXY DOWELS AT NEW TO EXISTING SLAB ON GRADE AND CURB:	NO TEST
D. ALL OTHER ANCHORS:	100%

2. TEST ACCEPTANCE CRITERIA:

   A. EPOXY ANCHOR TEST WITH HYDRAULIC JACK: MAINTAIN LOAD FOR 15 SECONDS WITH NO DISCERNABLE MOVEMENT.
   B. EXPANSION ANCHOR TEST WITH TORQUE WRENCH: OBTAIN SPECIFIED TORQUE WITHIN $\frac{1}{2}$ TURN OF NUT
   C. SCREW TYPE ANCHOR TEST WITH TORQUE WRENCH: OBTAIN SPECIFIED TORQUE WITHIN $\frac{1}{4}$ TURN OF SCREW

3. TEST LOADS (UNLESS SPECIFICALLY NOTED):
   A. MECHANICAL ANCHOR: MANUFACTURER'S MINIMUM INSTALLATION TORQUE PER APPROVED EVALUATION REPORT
   B. (#3) EPOXY ANCHOR: SEE TEST LOAD AT DETAIL WHERE ANCHOR IS NOTED

LIGHT GAUGE METAL

1. FOR NON-LOAD BEARING METAL STUDS AND CEILINGS SEE ARCHITECTURAL DRAWINGS AND SPECIFICATIONS. FOLLOWING NOTES APPLY TO METAL STUDS INDICATED ON STRUCTURAL DRAWINGS.
2. ALL LIGHT GAUGE METAL FRAMING CONSTRUCTION SHALL BE IN ACCORDANCE WITH AISI "SPECIFICATIONS FOR DESIGN OF COLD FORMED STEEL STRUCTURAL MEMBERS" 2007 EDITION.
3. ALL LIGHT GAUGE METAL FRAMING SHALL BE AS NOTED BELOW: INTERIOR AND EXTERIOR STUDS: GALVANIZED CONFORMING TO ASTM A123 COATING CLASS G60.
4. ALL LIGHT GAUGE METAL FRAMING SHALL CONFORM WITH THE FOLLOWING:

   - GALVANIZED STUDS, JOISTS, TRACKS, END CLOSURES, BRIDGING, ACCESSORIES AN STRAPS (12 (97), 14 (68) AND 16 (54) GAUGE): ASTM A653,GRADE 50, (Fy_min.= 50,000 psi, Fu_min.=65,000 psi)

   - GALVANIZED STUDS, JOISTS, TRACKS, END CLOSURES, BRIDGING, ACCESSORIES AND STRAPS (18 (43) AND 20 (33) GAUGE): ASTM A653, GRADE 33, (Fy_min.= 33,000 psi, Fu_min.=45,000 psi)

   - GALVANIZED BACKING PLATES: ASTM A653, GRADE 50, (Fy_min.= 50,000 psi, Fu_min.=65,000 psi)

5. DOUBLE VERTICAL STUDS SHALL BE STITCH WELDED TOGETHER ON BOTH FLANGES WITH 1/16" GROOVE WELDS X 1" LONG AT 12" ON CENTER, UNO ON DRAWINGS.
6. TOP AND BOTTOM STUD TRACKS FOR INTERIOR PARTITIONS SHALL BE 16 GA. MATERIAL WITH 1.5" FLANGES, UNO ON DRAWINGS.
7. TOP STUDS TRACKS FOR EXTERIOR WALLS SHALL BE 16 GA MATERIAL WITH 1.5" FLANGES: BOTTOM STUD TRACKS FOR EXTERIOR WALLS SHALL BE 16 GA MATERIAL WITH 1.5" FLANGES, UNO ON DRAWINGS.
8. DEEP LEG TRACK FOR EXTERIOR WALLS SHALL BE 16GA MATERIAL WITH 2" FLANGES, UNO ON DRAWINGS.
9. DOUBLE JOIST ARE BACK TO BACK U.N.O.
10. ALL LIGHT GAUGE FRAMING MEMBERS SHALL BE CLARK DIETRICH PER LA CITY RR 25889.
11. SUBMIT SHOP DRAWINGS FOR REVIEW.
12. ALL METAL STUDS AND JOISTS SHALL HAVE STIFFENED FLANGES. SEE DRAWINGS FOR DETAILS ON CONNECTIONS, BRACING, BRIDGING, ETC.
13. CUT FRAMING COMPONENTS, SUCH AS BRACING, SQUARELY OR AT AN ANGLE TO FIT TIGHT AGAINST ABUTTING MEMBERS. HOLD MEMBERS FIRMLY IN POSITION UNTIL PROPERLY FASTENED.
14. ALL BEARING STUDS MUST BE FULLY ATTACHED TO THE WALL LEDGER. ALL STUDS SHALL BE SPACED AT SAME SPACING AS JOIST (IN LINE FRAMING). ALL BEARING STUDS, COLUMNS AND BUILT UP STUDS SHALL HAVE CONTINUOUS BEARING DOWN TO FOUNDATION U.N.O. SOLID BLOCKING AT FLOORS SHALL BE PROVIDED.
15. CUTTING FLANGES AND STIFFENER LIPS OF LOAD BEARING STUDS IS PROHIBITED, NO STUD NOTCHING IS PERMITTED IN BEARING WALLS U.N.O.
16. OPENING IN STUD/JOIST WEBS OTHER THAN THE STANDARD PUNCHOUTS BY MANUFACTURER ARE PROHIBITED UNLESS SPECIFICALLY DESIGNED AND DETAILED BY ENGINEER. NO PUNCHOUT SHALL BE ALLOWED WITHIN 24" OF THE SUPPORT OR POINT LOAD.
17. BRIDGING SHALL BE PROVIDED FOR ALL JOISTS @ 8'-0" O.C.MAX.
18. ATTACH STUDS USING PLUG, BUTT OR SEAM WELDS, UNLESS NOTED OTHERWISE. WHERE STUDS ARE BURNED THROUGH BY WELDING, PROVIDE SUITABLE STITCH PLATE OF SAME GAUGE. SPLICES IN AXIAL LOADED STUDS OR BRACES ARE NOT PERMITTED. PROVIDE BUTT WELDS OR SPLICES AT JOINTS IN TRACK. WIRE TYING OF FRAMING COMPONENTS IS NOT PERMITTED.
19. PREFABRICATED PANELS SHALL BE SQUARED AND BRACED TO AVOID RACKING. LIFT PREFABRICATED PANELS IN A MANNER SO AS NOT TO CAUSE LOCAL DISTORTION OF ANY MEMBER.
20. ALL SHEET METAL SCREWS SHALL EXTEND THROUGH METAL FRAMING AND STRUCTURAL STEEL A MINIMUM OF $\frac{1}{4}$" OR 3 EXPOSED THREADS WHICHEVER IS GREATER.
21. ALL LIGHT METAL GAUGE TO METAL FASTENERS INDICATED ON THESE DRAWINGS ARE QUICK DRIVE COLD FORMED SELF-DRILLING/SELF-TAPPING STEEL SCREWS AS MANUFACTURED BY SIMPSON STRONG-TIE (LARR 25670). SCREWS SHALL HAVE A MINIMUM EDGE DISTANCE OF $\frac{1}{2}$" FASTENERS SHALL BE AS FOLLOWS:

APPLICATION	FASTENER
LIGHT GAUGE:	18 GA. OR 20 GA.-#8 MODIFIED TRUSS HEAD
TRACK TO STUD:	16 GA.-#10 PANCAKE HEAD
ALL OTHER LIGHT GAUGE METAL:	18 GA. OR 20 GA.-#8 WASHER HEAD
TO LIGHT GAUGE METAL:	16 GA.-#10 HEX WASHER HEAD CONNECTION

22. ALL LIGHT GAUGE METAL TO STRUCTURAL STEEL FASTENERS SHALL BE HILTI X-AL-H POWER DRIVEN FASTENER (LARR 25646, ICC ESR-1663):

APPLICATION	FASTENER SHANK DIA
STRUCTURAL STEEL THICKNESS $\leq = \frac{1}{4}$"	0.145"
$\frac{1}{4}$" $\leq$ STRUCTURAL STEEL THICKNESS $\leq \frac{3}{4}$"	0.158"
$\frac{3}{4}$" $\leq$ STRUCTURAL STEEL THICKNESS	0.177"

23. THE CONTRACTOR IS PROHIBITED FROM USING TORCHES TO BURN HOLES IN TRACKS OR STUDS

REINFORCEMENT

1. ALL TYPICAL REINFORCING BARS SHALL CONFORM TO ASTM A-615, GRADE 60, UNLESS NOTED OTHERWISE ON THE DRAWINGS (#3 BARS MAY BE GRADE 40 FOR AVAILABILITY)

   A. SPIRALS SHALL BE COLD DRAWN BARS CONFORMING TO ASTM A-82. REINFORCING FOR DIAPHRAGMS AND FOUNDATIONS MAY BE GRADE 75 IN LIEU OF GRADE 60, AT THE CONTRACTOR'S OPTION. MAINTAIN OVERALL CAPACITY OF ELEMENTS WHERE GRADE 75 REINFORCING IS PROPOSED FOR USE. IN GENERAL, REDUCE REQUIRED STEEL AREA IN PROPORTION TO RATIO OF YIELD STRENGTH. MAINTAIN BAR SPACING SHOWN ON PLANS, DETAILS, AND SCHEDULES.
   B. MOMENT FRAME LONGITUDINAL REBAR, SHEAR WALL VERTICAL REBAR, AND COUPLING BEAM LONGITUDINAL REBAR SHALL BE ASTM A-706 [Fy=60 KSI].
   C. SMOOTH DOWELS IN SLAB ON GRADE: ASTM A36, 36 KSI

2. WELDING OF REINFORCEMENT (INCLUDING TACK WELDING) SHALL BE NOT BE DONE UNLESS SPECIFICALLY SHOWN ON THE DRAWINGS. WHERE SHOWN ON THE DRAWINGS, THE FOLLOWING SHALL APPLY:

   A. WELDED REBAR SHALL COMPLY WITH ASTM A-706 [Fy=60 KSI]
   B. WELDING SHALL CONFORM TO AWS D1.4
   C. WELDING OF REINFORCING STEEL SHALL BE PERFORMED BY WELDERS
   D. CERTIFIED BY LA COUNTY
   E. USE E90XX ELECTRODES

3. WELDED WIRE FABRIC SHALL BE MADE OF COLD DRAWN WIRE AND SHALL CONFORM TO ASTM A-185 [Fy=65 KSI]. MINIMUM LAP AT SPLICES OF 12 INCHES. PROVIDE MESH IN FLAT SHEETS ONLY. ROLLED MESH IS NOT ACCEPTABLE. OFFSET END-LAPS IN ADJACENT SHEETS TO PREVENT CONTINUOUS LAPS.

4. REINFORCING STEEL SHALL HAVE THE FOLLOWING CONCRETE COVER. SEE ACI FOR TOLERANCES:

A. CONCRETE POURED AGAINST EARTH:	3"
B. FORMED CONCRETE IN CONTACT WITH EARTH:	2"
C. CONCRETE EXPOSED TO WEATHER (#6 AND LARGER):	2"
D. CONCRETE EXPOSED TO WEATHER (#5 AND SMALLER):	1 $\frac{1}{2}$"
E. SLABS (INCLUDING SLAB SUPPORTING EARTH), WALLS, AND JOISTS NOT EXPOSED TO WEATHER (#11 AND SMALLER):	1"
F. OTHER CONCRETE NOT EXPOSED TO WEATHER:	1 $\frac{1}{2}$"

5. #5 AND LARGER REINFORCING BARS SHALL NOT BE SPLICED EXCEPT AS LOCATED AND DETAILED ON THE DRAWINGS. #4 AND SMALLER BARS WITH LENGTHS NOT SHOWN SHALL BE CONTINUOUS. PROVIDE CLASS 'B' SPLICE UNLESS NOTED OTHERWISE. ALL BARS IN MASONRY SHALL BE CONTINUOUS, LAPPING 48 BAR DIAMETERS, 2'-0" MINIMUM. HORIZONTAL WALL SPLICES SHALL BE STAGGERED. VERTICAL BARS SHALL NOT BE SPLICED EXCEPT AT HORIZONTAL SUPPORTS, SUCH AS FLOOR OR ROOF, UNLESS DETAILED OTHERWISE. ALL BARS ENDING AT THE FACE OF A WALL, COLUMN, OR BEAM SHALL EXTEND TO WITHIN 2" OF THE FAR FACE AND HAVE A 90 DEGREE HOOK, UNLESS OTHERWISE SHOWN.

6. BARS SHALL BE FIRMLY SUPPORTED AND ACCURATELY PLACED AS REQUIRED BY THE ACI STANDARDS, USING TIE AND SUPPORT BARS IN ADDITION TO REINFORCEMENT SHOWN WHERE NECESSARY FOR FIRM AND ACCURATE PLACING. PROVIDE DOWELS TO MATCH ALL REINFORCEMENT AT POUR JOINTS, UNLESS SHOWN OR NOTED OTHERWISE. ALL DOWELS AND BOLTS SHALL BE ACCURATELY SET IN PLACE BEFORE PLACING CONCRETE. NO WELDING OF REINFORCEMENT (INCLUDING TACK WELDING) SHALL BE DONE UNLESS SHOWN ON THE DRAWINGS OR APPROVED BY THE ENGINEER. ALL SLAB AND BEAM REINFORCEMENT SHALL BE CHAIRED UP.

7. IN WALL REINFORCING, CURTAINS CONTAINING VERTICAL AND HORIZONTAL BARS OF THE SAME SIZE, VERTICAL BARS SHALL BE PLACED CLOSEST TO THE WALL SURFACE. IN CURTAINS WHICH VERTICAL AND HORIZONTAL BARS ARE OF DIFFERENT SIZES OR SPACING, THE LAYER WITH THE MOST STEEL SHALL BE PLACED CLOSEST TO THE NEAR SURFACE.

8. DRAWINGS SHOW TYPICAL REINFORCING CONDITIONS. CONTRACTOR SHALL PREPARE DETAILED PLACEMENT DRAWINGS OF ALL CONDITIONS SHOWING QUANTITY, SPACING, SIZES, CLEARANCES, LAPS, INTERSECTIONS, AND COVERAGE REQUIRED BY THE STRUCTURAL DETAILS, APPLICABLE CODE, AND TRADE STANDARDS. CONTRACTOR SHALL NOTIFY REINFORCING INSPECTOR OF ANY ADJUSTMENTS FROM TYPICAL CONDITIONS WHICH ARE PROPOSED IN PLACEMENT DRAWINGS TO FACILITATE FIELD PLACEMENT OF REINFORCING STEEL AND CONCRETE.

9. ALL PRINCIPAL REBAR SHALL TERMINATE WITH A STANDARD HOOK MINIMUM UNLESS SPECIFICALLY DETAILED OTHERWISE. REBAR BENDS SHALL BE MADE COLD. REBAR SHALL NOT BE BENT AFTER ANY PORTION OF THE BAR IS ENCASED IN CONCRETE.

10. ALL LAP SPLICES ARE CLASS 'B' LAP SPLICES UNLESS NOTED OTHERWISE.

11. ALL WALL FOOTING REINFORCEMENT SHALL BEND AROUND ALL CORNERS AND EXTEND 36 BAR DIAMETERS OR 18 INCHES WHICHEVER IS LARGER. UNLESS NOTED OTHERWISE.

12. ALL SLABS ON GRADE LESS THAN 6" IN THICKNESS SHALL BE REINFORCED WITH #4 REBARS AT 16 INCHES ON CENTERS EACH WAY, UNLESS NOTED OTHERWISE. PROVIDE ONE (1) LAYER OF 6X6/W2.9XW2.9 WELDED WIRE FABRIC CONTINUOUS FOR EVERY 3" ARCHITECTURAL CONCRETE FILLS ABOVE THE STRUCTURAL SLAB.

13. ALL MECHANICAL, PLUMBING AND ELECTRICAL EQUIPMENT PADS LESS THAN 4" THICK SHALL BE REINFORCED WITH AT LEAST ONE (1) LAYER OF 6X6/W2.9XW2.9 WELDED WIRE FABRIC AND HAVE HOOKED DOWELS (#3 AT 12' ON CENTERS) INTO THE STRUCTURAL SLAB. UNLESS NOTED OTHERWISE. FOR PADS GREATER THAN 4 INCHES THICK, USE REINFORCING AS SHOWN IN THE TYPICAL DETAILS.

14. ADDITIONAL REINFORCEMENT SHALL BE PROVIDED AROUND ALL SLAB AND WALL OPENINGS INCLUDING DIAGONAL BARS WITHOUT EXCEPTION.

15. ALL STRUCTURAL CONCRETE ELEMENTS REQUIRE REINFORCEMENT SINCE NO PLAIN CONCRETE ELEMENTS ARE USED. ALL CONCRETE SLABS SHALL HAVE A MINIMUM REINFORCEMENT PERCENTAGE OF 0.0018 EACH WAY CONTINUOUS.

ALTERATION / RENOVATION DESIGN CRITERIA

DESIGN IS BASED ON 2022 CALIFORNIA BUILDING CODE (ASCE 7-16).

ROOF LIVE LOAD: 20 PSF
ROOF SNOW LOAD: 0 PSF

SEISMIC FACTORS FOR NEW NON-STRUCTURAL COMPONENTS:
Ss = 1.996
S1 = 0.734
SITE CLASS: D
Fa = 1.0
SDS = 1.331
SD1 = 0.832
Ip = 1.0
SDC=D

SEISMIC FORCE RESISTING SYSTEM: COMPONENT SUPPORT AND ANCHORAGE
ANALYSIS PROCEDURE: EQUIVALENT LATERAL FORCE
Fp = 2.00 Wp FOR ROOF LEVEL UNIT WITH VIBRATION ISOLATION (ap = 2.5, Rp = 2.0, Z/H = 1.0)
Fp = 0.40 Wp FOR FLOOR LEVEL UNIT WITHOUT VIBRATION ISOLATION (ap = 1.0, Rp = 1.5, Z/H = 0)

WIND FACTORS:
RISK CATEGORY: II
EXPOSURE: C
WIND SPEED = 95 MPH
ROOFTOP EQUIPMENT WIND LOAD = 38.1 PSF (LRFD)
INTERIOR PARTITION WALL WIND LOAD = 5 PSF (ASD)

ABBREVIATIONS

ANCHOR BOLTS		PL.	PLATE / PROPERTY LINE
ARCHITECT OR ARCHITECTURAL		PLY.	PLYWOOD
BOUNDARY NAILING		REINF.	REINFORCEMENT
BLOCKING		REQ'D.	REQUIRED
BEAM		S.A.D.	SEE ARCHITECTURAL DRAWINGS
CONNECTION		S.O.G.	SLAB ON GRADE
CONTINUOUS		SCHED.	SCHEDULE
DRAWINGS		SHT'G	SHEATHING
EACH		SIM.	SIMILAR
EDGE NAIL		S.M.S.	SHEET METAL SCREWS
FINISH NAIL		STAGG.	STAGGERED
FOOTING		T&B	TOP & BOTTOM
GLUE-LAMINATED BEAM		TYP.	TYPICAL
L.IGHTWEIGHT		U.N.O.	UNLESS NOTED OTHERWISE
MACHINE BOLTS		U.S.P.	UNDER SEPARATE PERMIT
MAXIMUM		V.I.F.	VERIFY IN FIELD
MINIMUM		WD.	WOOD
ON CENTER		W.N.S.	WELDED NELSON STUDS
PRESSURE TREATED		W.T.S.	WELDED TREADED STUDS

GENERAL

1. ALL NEW CONSTRUCTION SHALL COMPLY WITH THE CONTRACT DOCUMENTS AND THE 2022 CALIFORNIA BUILDING CODE AND DSA REQUIREMENTS.

2. REFERENCE TO CODES, RULES, REGULATIONS, STANDARDS, MANUFACTURER'S INSTRUCTIONS OR REQUIREMENTS OF REGULATORY AGENCIES IS TO THE LATEST PRINTED EDITION OF EACH IN EFFECT AT THE DATE OF SUBMISSION OF BID UNLESS THE DOCUMENT DATE IS SHOWN.

3. TYPICAL DETAILS AND GENERAL NOTES APPLY TO ALL PARTS OF THE WORK EXCEPT WHERE SPECIFICALLY DETAILED OR UNLESS NOTED OTHERWISE (U.N.O.)

4. THE STRUCTURAL DRAWINGS ILLUSTRATE THE NEW STRUCTURAL MEMBERS. REFER TO ARCHITECTURAL, MECHANICAL AND ELECTRICAL DRAWINGS FOR NON-STRUCTURAL ITEMS WHICH REQUIRE SPECIAL PROVISIONS DURING THE CONSTRUCTION OF THE STRUCTURAL MEMBERS.

5. REFER TO ARCHITECTURAL DRAWINGS FOR FLOOR DEPRESSIONS, EDGE OF SLAB, OPENINGS, SLOPES, DRAINS, CURBS, PADS, EMBEDDED ITEMS, NON-BEARING PARTITIONS, ETC. REFER TO MECHANICAL AND ELECTRICAL DRAWINGS FOR SLEEVES, OPENINGS, AND HANGERS FOR PIPES, DUCTS AND EQUIPMENT.

6. THE CONTRACTOR SHALL VERIFY AND BE RESPONSIBLE FOR COORDINATING THE WORK OF ALL TRADES AND SHALL VERIFY ALL DIMENSIONS AND CONDITIONS WHICH IMPACT THE WORK. FIELD VERIFY SIZES, ELEVATIONS, HOLE LOCATIONS, ETC. PRIOR TO FABRICATION.

7. DRAWING DIMENSIONS ARE TO FACE OF STRUCTURE, JOINT CENTERLINE OR COLUMN GRID CENTERLINE UNLESS NOTED OTHERWISE. DO NOT SCALE THE DRAWINGS.

8. CONTRACTOR SHALL CAREFULLY REVIEW THE DRAWINGS TO IDENTIFY THE SCOPE OF WORK REQUIRED. VISIT THE SITE TO RELATE THE SCOPE OF WORK TO EXISTING CONDITIONS AND DETERMINE THE EXTENT TO WHICH THOSE CONDITIONS AND PHYSICAL SURROUNDINGS WILL IMPACT THE WORK.

9. EXISTING CONDITIONS AS SHOWN ON THESE PLANS ARE FOR REFERENCE ONLY. CONTRACTOR IS REQUIRED TO FIELD VERIFY ALL EXISTING CONDITIONS PRIOR TO CONSTRUCTION. CONTRACTOR SHALL REPORT CONDITIONS THAT CONFLICT WITH THE CONTRACT DOCUMENTS TO THE OWNER'S REPRESENTATIVE. DO NOT DEVIATE FROM THE CONTRACT DOCUMENTS WITHOUT WRITTEN DIRECTION FROM THE OWNER'S REPRESENTATIVE.

10. THE CONTRACTOR SHALL RESOLVE ANY CONFLICTS ON THE DRAWINGS OR IN THE SPECIFICATIONS WITH THE OWNER'S REPRESENTATIVE BEFORE PROCEEDING WITH THE WORK.

11. ANY DEVIATION, MODIFICATION & SUBSTITUTION FROM THE APPROVED SET OF STRUCTURAL DRAWINGS SHALL BE SUBMITTED TO THE OWNER'S REPRESENTATIVE FOR REVIEW/APPROVAL PRIOR TO ITS USE OR INCLUSION ON THE SHOP DRAWINGS & PRIOR TO PROCEEDING WITH THE WORK.

12. THE CONTRACTOR SHALL PROVIDE ALL NECESSARY SHORES, BRACES, GUYS, HOIST BEAM, REQUIRED TO SUPPORT ALL LOADS TO WHICH THE BUILDING STRUCTURE AND COMPONENTS, SOILS, OTHER STRUCTURES AND UTILITIES MAY BE SUBJECTED DURING CONSTRUCTION. SHORING SYSTEMS SHALL BE DESIGNED AND STAMPED BY A CIVIL ENGINEER LICENSED IN THE STATE OF CALIFORNIA. VISITS TO THE SITE BY THE OWNER'S REPRESENTATIVE WILL NOT INCLUDE OBSERVATION OF THE ABOVE NOTED ITEMS.

13. THE CONTRACTOR SHALL PROVIDE MEANS, METHOD, TECHNIQUES, SEQUENCE AND PROCEDURE OF CONSTRUCTION AS REQUIRED. SITE VISITS PERFORMED BY THE OWNER'S REPRESENTATIVE DO NOT INCLUDE INSPECTIONS OF MEANS AND METHODS OF CONSTRUCTION PERFORMED BY CONTRACTOR.

14. THE CONTRACTOR SHALL PROTECT ALL WORK, MATERIALS AND EQUIPMENT FROM DAMAGE AND SHALL PROVIDE PROPER STORAGE FACILITIES FOR MATERIALS AND EQUIPMENT DURING CONSTRUCTION.

15. A COPY OF ANY REQUIRED LA COUNTY RESEARCH REPORT AND/OR CONDITIONS OF LISTING SHALL BE MADE AVAILABLE AT THE JOB SITE.

16. ATTACHMENT OF NON-STRUCTURAL COMPONENTS SPECIFIED BY OTHERS TO STRUCTURAL ELEMENTS SHALL BE SPECIFIED BY THE NON-STRUCTURAL COMPONENT DESIGNER/SPECIFIER/INSTALLER. DESIGNER OF NON-STRUCTURAL ELEMENTS SHALL AT A MINIMUM SPECIFY THE CONNECTION TO THE STRUCTURE INCLUDING BUT NOT LIMITED TO: ANY TYPE OF CONNECTING HARDWARE, WIRE, HANGERS, FASTENERS, CLIPS, UNISTRUT MEMBERS. NON STRUCTURAL ELEMENTS SHALL INCLUDE, BUT NOT LIMITED TO: MEP AND HVAC EQUIPMENT & THEIR SUPPORTING PADS, PLATFORMS, FRAMES, ETC.; DUCTWORK, PIPES, CONDUITS, ARTWORK, GRILLES, GRATING, METAL SCREENS, ELEVATOR RAILS, STONE FINISH TILES, STONE CAPS, BRICK VENEER.

17. ALLOW FOURTEEN WORKING DAYS FOR PROCESSING SHOP DRAWINGS AND SUBMITTALS AFTER RECEIPT.

SEISMIC RETROFIT DESIGN CRITERIA

DESIGN IS BASED ASCE 41-17

SCOPE: RETROFIT OF EXISTING STRUCTURE FOR SEISMIC EVALUATION REH 123082. RETROFIT SCOPE IS DIAPHRAGM STRENGTHENING WITH HORIZONTAL STEEL BRACES WITH IMPACTED CONNECTIONS AND SUPPORTS. THIS INCLUDES STRENGTHENING AT DIAPHRAGM STRUTS AND DIAPHRAGM CONNECTIONS TO MASONRY WALLS. INTERIOR CMU SHEARWALLS ADDED TO REDUCE SEISMIC DEMAND ON EXISTING SECONDARY MASONRY WALLS. NEW AND ENLARGED FOOTINGS ADDED FOR THE SEISMIC LOAD DISTRIBUTION OF THE FOUNDATION. CRACKS AT THE EXISTING PERIMETER CONCRETE FASCIA TO BE REPAIRED.

SEISMIC FACTORS FOR RETROFIT:

BSE-1E/S-3: Ss = 0.687, S1 = 0.228, Fa = 1.25, Fv = 2.143, Sxs = 0.859, Sx1 = 0.489, N-C
BSE-2N/S-5: Ss = 1.991, S1 = 0.731, Fa = 1.00, Fv = 1.70, Sxs = 1.991, Sx1 = 1.243, N-D
BSE-2N/S-5 CONTROLS FOR COLLAPSE PREVENTION
Sds = 1.327, Sd1 = 0.828
Sa = 1.991, V = 2.787 W

K = 1 FOR EXISTING MATERIALS FROM 1966 DSA APPROVED DRAWINGS
(2,500 PSI EXISTING CONCRETE SLAB ON GRADE AND FOOTINGS, 3,000 PSI OTHER EXISTING CONCRETE, 1,500 PSI EXISTING MASONRY, A36 EXISTING STEEL)

M = 6 DIAPHRAGM BRACES, DIAPHRAGM CHORDS
M = 5.5 COLLECTOR BEAMS
J = 2 CONNECTIONS, SHEARWALLS, AND FOOTINGS

EXISTING NON-STRUCTURAL COMPONENTS TO REMAIN:

1. EXTERIOR FASCIA WITH CRACK REPAIRS NOTED
2. ONLY PARTITION WALL SPECIFICALLY NOTED TO REMAIN AT EXISTING DATA CABLES TO BE PROTECTED (BETWEEN GRIDS 5&6, F&G)

(ALL OTHER EXISTING NON-STRUCTURAL CEILINGS, PARTITION WALLS, MECHANICAL UNITS, AND DUCTWORK ARE REMOVED AND REPLACED WITH NEW AS PART OF THIS PROJECT)

DIVISION OF THE STATE ARCHITECT

IDENTIFICATION STAMP
DIV. OF THE STATE ARCHITECT
APP: 03-123218 INC:
REVIEWED FOR
SS ☑ FLS ☑ ACS ☑
DATE: 07/11/2024

MOORPARK COLLEGE
7075 CAMPUS RD
MOORPARK, CA 93021
TEL: (805) 378 - 1400

PROJECT TITLE AND SCHOOL LOCATION

ADMINISTRATION BUILDING RENOVATION

7075 CAMPUS ROAD
MOORPARK, CA 91320

COMMISSIONED ARCHITECT

AMADOR

amador whittle architects, inc.
28328 AGOURA RD, 203 | AGOURA HILLS CA, 91301 | 805-558-4334

CONSULTANT

Orion Structural
Orion Structural Group, Inc.
223 East Thousand Oaks Boulevard, Suite 304
Thousand Oaks, California 91360 - 7734
Phone: 805.390.9242 Fax: 805.494.0418 O.S.G. #21610

STAMPS/SEALS

REGISTERED PROFESSIONAL ENGINEER
WILL A. LAMBERT
No. 5430
Exp. 06/30/2024
STRUCTURAL
STATE OF CALIFORNIA
12/22/2023

LICENSED ARCHITECT
JEAN ANN AMADOR
C-22205
APRIL 30, 2025
DATE
STATE OF CALIFORNIA

SHEET TITLE:

STRUCTURAL GENERAL NOTES

PROJECT NO.: 21-MPC-040	PROJECT ARCH:
DRAWN: EN	CHECKED: WL
SHEET NUMBER: S001	
DATE: 12/22/23	SHEET: ___ OF ___

POWDER DRIVEN SHOT PINS (LOW VELOCITY)

1. SHOT PINS MAY BE USED FOR SHEAR LOADS. THEY MAY BE USED IN TENSION TO SUPPORT LOADS LESS THAN 90 POUNDS IN CONCRETE FOR MINOR LOADS SUCH AS ACOUSTICAL CEILINGS, DUCT WORK, CONDUIT, ETC. REFER TO ASCE 7-16 SEC. 13.4.5 FOR SHOT PINS INSTALLED IN STRUCTURAL STEEL. ANY SHOT ANCHORS MUST HAVE AN EVALUATION REPORT NUMBER FOR THE TYPE OF CONCRETE USED ON THE JOB. SHOT PINS MAY NOT BE USED IN CONCRETE CURBS OR MASONRY UNLESS APPROVED OTHERWISE.

2. SHOT PINS PERMITTED IN SEISMIC SHEAR FOR NONSTRUCTURAL COMPONENTS EXEMPT FROM CBC SEC. 1617A.1.20 AND FOR INTERIOR NON-BEARING, NON-SHEAR WALL PARTITIONS. HOWEVER, THEY SHALL NOT BE USED FOR EXTERIOR CLADDING OR CURTAIN WALL SYSTEM.

3. THE ALLOWABLE LOADS INSTALLED IN CONCRETE SHALL BE 90 POUNDS OR 80% OF ICC EVALUATION REPORT APPROVED VALUES, WHICHEVER IS LESS. REFER TO ASCE 7-16 SEC. 13.4.5 FOR SHOT PINS INSTALLED IN STRUCTURAL STEEL. QUALIFICATION FOR USE OF ALL POWER ACTUATED TOOLS MUST MEET ANSI A10.3 STANDARD AS REQUIRED BY THE MANUFACTURER AND ALL OSHA REQUIREMENTS.

4. TESTING – THE OPERATOR, TOOL AND FASTENER SHALL BE PRE-QUALIFIED BY THE PROJECT INSPECTOR. THE INSPECTOR SHALL OBSERVE THE TESTING OF THE FIRST 10 FASTENER INSTALLATIONS. A TEST "PULL- OUT" LOAD OF NOT LESS THAN TWICE THE DESIGN LOAD SHALL BE APPLIED TO THE PIN IN SUCH A MANNER AS NOT TO RESIST THE SPALLING TENDENCY OF THE CONCRETE SURROUNDING THE PIN. THEREAFTER RANDOM TESTS UNDER THE PROJECT INSPECTOR'S SUPERVISION SHALL BE MADE OF APPROXIMATELY 1 IN 10 PINS. IF ANY PIN FAILS TESTING, TEST ALL PINS OF THE SAME CATEGORY NOT PREVIOUSLY TESTED UNTIL TWENTY (20) CONSECUTIVE PASS, THEN RESUME THE INITIAL TESTING FREQUENCY.

MASONRY

1. BLOCK SHALL BE MEDIUM WEIGHT (115 PCF) CONFORMING TO ASTM- C-90 GRADE N-1. USE UNITS OPEN ONE END, AND BOND BEAM UNITS AT HORIZONTAL REINFORCING. WHEN BLOCKS ARE EXPOSED OBTAIN APPROVAL OF SUBMITTAL FROM ARCHITECT. UNITS SHALL ATTAIN A MINIMUM COMPRESSIVE STRENGTH AS REQUIRED TO MEET THE MASONRY COMPRESSIVE STRENGTH OF MASONRY f'm SPECIFIED ON THE PLANS AS FOLLOWS:

   A. 1,900 PSI FOR SPECIFIED f'm UP TO 1,500 PSI
   B. 2,800 PSI FOR SPECIFIED f'm UP TO 2,000 PSI
   C. 3,750 PSI FOR SPECIFIED f'm UP TO 2,500 PSI
   D. 4,800 PSI FOR SPECIFIED f'm UP TO 3,000 PSI

2. MIN. SPECIFIED COMPRESSIVE STRENGTH SHALL BE f'm = 1,500 PSI, UNLESS OTHERWISE SPECIFIED ON THE PLANS.

3. CEMENT: ASTM C-150, LOW ALKALI, TYPE 1 OR 11 PORTLAND CEMENT. (MASONRY CEMENT AND PLASTIC CEMENT SHALL NOT BE USED)

4. MORTAR:
   A. CONFORMING TO ASTM C-270, TYPE [S].
   B. MIX PROPORTIONS SHALL CONFORM TO ASTM C-270.
   C. AGGREGATED SHALL CONFORM TO ASTM C-144.

5. GROUT:
   A. CONFORMING TO ASTM C-476.
   B. ATTAINS THE MASONRY COMPRESSIVE STRENGTH f'm OR 2,000 PSI AT 28 DAYS, WHICHEVER IS GREATER.
   C. MIX PROPORTIONS SHALL CONFORM TO ASTM C-476
   D. AGGREGATES SHALL CONFORM TO ASTM C-404
   E. USE COARSE GROUT IN GROUT SPACES 2 INCHES OR MORE IN WIDTH AND CELLS TO BE GROUTED SOLID.

6. MEASURE MATERIALS FOR MORTAR AND GROUT IN CALIBRATED DEVICES. SHOVEL MEASUREMENTS ARE NOT ACCEPTABLE.

7. ADJUST THE WATER CONTENT OF THE MORTAR AND GROUT MIXES TO PROVIDE PROPER WORKABILITY UNDER EXISTING FIELD CONDITIONS WITHOUT SEGREGATION.

8. REINFORCING STEEL:
   A. REBAR: ASTM A-615, GRADE 60 (FY=60KSI).
   B. JOINT REINFORCEMENT: ASTM A-951

9. LAP REINFORCING STEEL AT SPLICES WITH A MINIMUM 48 BAR DIAMETERS, UNLESS NOTED OTHERWISE. WHERE CLEAR DISTANCE BETWEEN BARS AT ADJACENT SPICES IS 3 INCHES OR LESS, INCREASE LAP LENGTH 30% UNLESS SPLICES ARE STAGGERED AT LEAST 24 BAR DIAMETERS.

10. DOWELS FOR WALLS AND COLUMNS SHALL MATCH SIZE AND SPACING OF WALL AND COLUMN REINFORCING STEEL.

11. MASONRY WORK SHALL CONFORM TO THE LATEST ADOPTED EDITION OF THE CBC AND THE MSJC SPECIFICATIONS.

12. CONCRETE BLOCK UNITS ARE TO BE STAGGERED & TO HAVE VERTICAL CONTINUITY OF CELLS UNOBSTRUCTED.

13. IF WORK IS STOPPED AN HOUR OR LONGER, PROVIDE HORIZONTAL CONSTRUCTION JOINT BY STOPPING GROUT 1½" BELOW TOP OF MASONRY UNIT.

14. SPECIAL INSPECTION IS REQUIRED FOR ALL MASONRY WORK.

15. GROUT ALL MASONRY WALLS SOLID. GROUTING LIFTS SHALL NOT EXCEED 5'-0" IN HEIGHT IN ACCORDANCE WITH 2019 MSJC SPECIFICATIONS.

16. THE CLEAR DISTANCE BETWEEN THE SURFACE OF A BAR AND ANY SURFACE OF A MASONRY UNIT SHALL BE NOT LESS THAN ¼" FOR FINE GROUT AND NOT LESS THAN ½" FOR COURSE GROUT.

17. SECURE REBAR AGAINST DISPLACEMENT PRIOR TO GROUTING AT INTERVALS NOT GREATER THAN 200 BAR DIAMETERS.

18. TERMINATE HORIZONTAL BARS WITH A STANDARD HOOK AT THE JAMBS OF WALL OPENINGS.

19. VERIFY SPECIFIED COMPRESSIVE STRENGTH OF MASONRY IN ACCORDANCE WITH ONE OF THE FOLLOWING METHODS: MASONRY PRISM TESTING, MASONRY PRISM TEST RECORD OR UNIT STRENGTH METHOD. FIVE MASONRY PRISM TESTS SHALL BE BUILT AND TESTED PRIOR TO CONSTRUCTION. THREE MASONRY PRISM TESTS (PER 5,000 SQ. FT. OF FLOOR AREA, 3 MIN.) SHALL BE BUILT AND TESTED DURING CONSTRUCTION WHEN FULL STRESSES ARE USED IN DESIGN.

STRUCTURAL STEEL WELDING

1. ALL WELDING SHALL BE IN STRICT CONFORMANCE WITH THE LATEST EDITION OF AWS D1.1 AND THE 2022 CALIFORNIA BUILDING CODE.

2. ALL WELDING ELECTRODES (FILLER METAL) SHALL BE E7XXX (70 KSI), U.N.O., AND SHALL BE LOW HYDROGEN TYPES. FIELD WELDING OF FULL AND PARTIAL PENETRATION WELDS OF THE STEEL MOMENT FRAME CONNECTIONS BETWEEN MOMENT FRAME BEAMS AND MOMENT FRAME COLUMNS SHALL BE BY SHIELDED METAL ARC PROCESS USING LOW HYDROGEN ELECTRODES

3. ALL WELDS SHALL HAVE A FILLER METAL WITH CHARPY V-NOTCH TOUGHNESS OF 20 FT/LBS AVERAGE AT -20 DEGREES FAHRENHEIT AND 40 FT/LBS @ 70 DEGREES FAHRENHEIT. CERTIFY CONFORMANCE TO CHARPY V-NOTCH TOUGHNESS REQUIREMENTS WITH TESTS BY AN INDEPENDENT TESTING LABORATORY.

4. LENGTHS OF WELDS ARE EFFECTIVE LENGTHS AS SPECIFIED IN THE APPLICABLE CODE. WHERE LENGTH OF WELD IS NOT SHOWN IT SHALL BE FULL LENGTH OF JOINT. ALL BUTT WELDS SHALL BE FULL PENETRATION, UNLESS NOTED OTHERWISE.

5. CONTRACTOR SHALL PROVIDE FIELD WELDING AS REQUIRED FOR CONSTRUCTION. WHERE FIELD WELDING IS NOTED, THE DESIGNATION IS GIVEN AS A SUGGESTED CONSTRUCTION PROCEDURE ONLY.

6. ALL SHOP WELDS SHALL BE PERFORMED BY A L LICENSED FABRICATOR.

7. ALL WELDERS SHALL BE QUALIFIED FOR THE WORK THEY WILL BE DOING & SHALL HAVE CURRENT CERTIFICATIONS BY AWS.

8. FACES OF FILLET WELDS EXPOSED TO VIEW SHALL HAVE AS-WELDED SURFACES THAT ARE REASONABLY SMOOTH AND UNIFORM. NO FINISHING OR GRINDING SHALL BE REQUIRED, EXCEPT WHERE CLEARANCES OR FIT OF OTHER ITEMS MAY SO NECESSITATE.

9. ALL PARTIAL AND FULL PENETRATION WELDS WHICH ARE EXPOSED TO VIEW SHALL BE GROUND SMOOTH AND FLUSH WITH FINISH SURFACE OF STEEL. HOLES SHALL BE FILLED WITH WELD METAL OR BODY SOLDER AND SMOOTHED BY GRINDING OR FILING.

10. CLEAN GROOVE PREPARATION THERMAL CUTS BY GRINDING.

11. WELDS SHALL BE TERMINATED AT THE END OF A JOINT IN A MANNER THAT WILL ENSURE SOUND WELDS. WHENEVER NECESSARY THIS SHALL BE DONE BY USE OF EXTENSION BARS AND RUN OFF TABS.

12. ALL WELDED JOINTS SHALL BE PRE-QUALIFIED PER THE LATEST EDITION OF AWS D1.1. NON PRE- QUALIFIED WELDED JOINTS SHALL BE QUALIFIED BY TEST & PROCEDURE QUALIFICATION TEST RECORD INCLUDED PER THE LATEST EDITION OF AWS D1.1.

13. THE CONTRACTOR SHALL SUBMIT ALL WELDING PROCEDURE SPECIFICATIONS (WPS) TO BE USED ON THE PROJECT PER THE LATEST EDITION OF AWS D1.1. THE WPS SHALL INCLUDE ALL MANUFACTURER'S DATA SHEETS FOR ALL WELDING MATERIALS TO BE USED. THE DATA SHEETS SHALL DESCRIBE THE PRODUCTS, LIMITATIONS OF USE, RECOMMENDED WELDING PARAMETERS, AND STORAGE AND EXPOSURE REQUIREMENTS.

14. ELECTRODES SHALL BE RECEIVED AND STORED IN THE ORIGINAL, UNDAMAGED MANUFACTURER PACKAGING, UNTIL READY FOR USE. WHEN WELDING IS TO BE SUSPENDED FOR MORE THAN 8 HOURS, ELECTRODES SHALL BE REMOVED FROM THE MACHINES AND STORED IN AN ELECTRODE WIRE OVEN MAINTAINED AT A TEMPERATURE BETWEEN 250 DEGREES AND 550 DEGREES OR AS RECOMMENDED BY THE MANUFACTURER. ELECTRODES NOT CONSUMED WITHIN 24 HOURS OF ACCUMULATED EXPOSURE OUTSIDE CLOSED OR HEATED STORAGE SHALL NOT BE USED.

15. ALL BOTTOM FLANGE BACKING BARS SHALL BE REMOVED. FOLLOWING REMOVAL OF BACKING, THE ROOT PASS SHALL BE BACKGOUGED TO SOUND WELD METAL AND BACKWELDED UNTIL FLUSH OR WITH SLIGHT REINFORCEMENT. THE SURFACE SHALL BE GROUND SMOOTH TO A SURFACE ROUGHNESS NOT TO EXCEED 500 MICROINCHES.

STRUCTURAL STEEL

1. FABRICATION AND ERECTION OF STRUCTURAL STEEL SHALL BE IN ACCORDANCE WITH THE LATEST EDITION OF AISC SPECIFICATIONS FOR STRUCTURAL STEEL BUILDINGS, AND THE LATEST EDITION OF AISC SEISMIC PROVISIONS FOR STRUCTURAL STEEL BUILDINGS. WHERE THE STRUCTURAL STEEL IS EXPOSED, FABRICATION AND ERECTION SHALL ALSO BE IN ACCORDANCE WITH AISC CODE OF STANDARD PRACTICE FOR ARCHITECTURALLY EXPOSED STRUCTURAL STEEL.

2. STRUCTURAL STEEL SHALL CONFORM TO ASTM DESIGNATION AS INDICATED BELOW (U.N.O.):

A.	ALL WIDE FLANGE SHAPES	A992, GRADE 50
B.	STEEL ANGLES	A36
C.	ALL PLATES	A36
D.	HSS (RECTANGULAR AND SQUARE)	A500, GRADE B OR C
E.	HSS (ROUND)	A500, GRADE B OR C
F.	PIPE COLUMNS	A53, GRADE B
G.	CHANNELS (C AND MC SECTIONS)	A36
H.	ALL OTHER STRUCTURAL SECTIONS	A572, GRADE 50
I.	STEEL TO STEEL CONNECTION BOLTS	A325X
J.	ANCHOR BOLTS, MACHINE BOLTS, THREADED RODS	GRADE 36 (F1554 GR36, A36, A307-S1)
K.	NUTS FOR BOLTS AND MACHINE BOLTS	A563
L.	HARDENED WASHERS	F436
M.	UNHARDENED WASHERS	F844
N.	PLAIN WASHERS	ANSI B18.22.1
O.	BEVELED WASHERS	ANSI B18.23.1

3. ALL STEEL SHALL BE PROVIDED BY A LICENSED FABRICATOR.

4. WHEN FABRICATING SIMPLY SUPPORTED BEAMS, PLACE NATURAL CAMBER UP.

5. SPLICE MEMBERS ONLY WHERE INDICATED.

6. HIGH STRENGTH BOLTS SHALL BE INSTALLED IN ACCORDANCE WITH THE LATEST EDITION OF AISC SPECIFICATIONS FOR STRUCTURAL JOINTS USING ASTM A325 OR A490 BOLTS. HIGH STRENGTH BOLTS SHALL BE BEARING TYPE WITH THREADS EXCLUDED FROM THE FROM THE SHEAR PLANES (I.E. A325-X) UNLESS NOTED OTHERWISE.

7. ALL BOLTED CONNECTIONS SHALL HAVE A MINIMUM OF TWO BOLTS UNLESS SHOWN OTHERWISE. MINIMUM SIZE OF BOLTS FOR STRUCTURAL STEEL CONNECTIONS SHALL BE 3/4" DIA. EXCEPT WHEN OTHERWISE SHOWN OR NOTED.

8. ALL HOLES SHALL BE STANDARD DIAMETER U.N.O.

9. ALL FLANGE STIFFENER PLATES SHALL BE ORIENTED SO THAT ROLLING DIRECTION OF PLATE IS PARALLEL WITH DIRECTION OF PRINCIPAL STRESS.

10. AFTER FABRICATION, ALL STEEL SHALL BE CLEANED FREE OF RUST, LOOSE MILL SCALE AND OIL.

11. PROVIDE FILLS AT SPLICES OF PARTS HAVING MORE THAN 1/8" DIFFERENCE IN THICKNESS.

12. PROVIDE BEVELED WASHERS ON ALL CONNECTIONS WHERE SLOPE SURFACE EXCEEDS 1:20.

13. HEADED ANCHOR STUDS AND THREADED STUDS SHALL BE NELSON GRANULAR FLUX-FILLED, AND SHALL BE MADE FROM COLD FINISHED LOW CARBON STEEL, CONFORMING TO A-108, GRADES 1015 - 1020 WITH A MINIMUM TENSILE STRENGTH OF 60,000 PSI. (ICC-ESR 2856). STUD WELDING INSPECTION AND TESTING SHALL CONFORM TO AWS D1.1.

14. DEFORMED BAR ANCHOR STUDS SHALL BE NELSON D2L GRANULAR FLUX-FILLED REBAR STUDS OR APPROVED EQUAL, AND SHALL BE MADE OF LOW CARBON COLD ROLLED STEEL WITH A MINIMUM TENSILE STRENGTH OF 80,000 PSI. STUD WELDING INSPECTION AND TESTING SHALL CONFORM TO AWS D1.1.

15. HOT DIP GALVANIZE IN ACCORDANCE WITH ASTM A123 AND ASTM A153 STRUCTURAL STEEL AND FASTENERS THAT ARE PERMANENTLY EXPOSED TO THE WEATHER. REPAIR GALVANIZING AFTER WELDING IN ACCORDANCE WITH ASTM A780.

16. THE FULL DESIGN AND LOAD CARRYING CAPACITY OF THE STEELWORK SHALL NOT BE IMPAIRED DUE TO FABRICATION, SHIPMENT, OR ERECTION PROCEDURES, THROUGHOUT THE COMPLETE PROCESS. THE STABILITY OF ALL INDIVIDUAL MEMBERS AND ASSEMBLIES SHALL BE MAINTAINED.

17. THE CONTRACTOR SHALL BE RESPONSIBLE FOR THE CONTROL OF ALL ERECTION PROCEDURES AND SEQUENCES WITH RELATION TO TEMPERATURE DIFFERENTIALS AND WELD SHRINKAGE.

18. ALL ADDITIONAL STEEL REQUIRED FOR ERECTION PURPOSES SHALL BE PROVIDED AT NO ADDITIONAL COST AND SHALL BE REMOVED UNLESS APPROVED BY THE OWNER'S REPRESENTATIVE IN WRITING.

DIVISION OF THE STATE ARCHITECT

IDENTIFICATION STAMP
DIV. OF THE STATE ARCHITECT
APP: 03-123218 INC:
REVIEWED FOR
SS ☑ FLS ☑ ACS ☑
DATE: 07/11/2024

MOORPARK COLLEGE

7075 CAMPUS RD
MOORPARK, CA 93021
TEL: (805) 378 - 1400

PROJECT TITLE AND SCHOOL LOCATION

ADMINISTRATION BUILDING RENOVATION

7075 CAMPUS ROAD
MOORPARK, CA 91320

COMMISSIONED ARCHITECT

AMADOR

amador whittle architects, inc.
28328 AGOURA RD. 203 | AGOURA HILLS CA. 91301| 805-558-4324

CONSULTANT

Orion Structural

Orion Structural Group, Inc.
220 East Thousand Oaks Boulevard, Suite 304
Thousand Oaks, California 91360 - 7734
Phone: 805.390.9242 Fax: 805.494.0418 O.S.G. #21600

STAMPS/SEALS

REGISTERED PROFESSIONAL ENGINEER
WILL A. LAMBERT
No. 5430
Exp. 06/30/2024
STRUCTURAL
STATE OF CALIFORNIA
12/22/2023

LICENSED ARCHITECT
JEAN ANN AMADOR
C-22205
APRIL 30, 2025
DATE
STATE OF CALIFORNIA

SHEET TITLE:

STRUCTURAL GENERAL NOTES

PROJECT NO: 21-MPC-040
PROJECT ARCH:
DRAWN: EN
CHECKED: WL
SHEET NUMBER:

S002

DATE: 12/22/23
SHEET: ___ OF ___

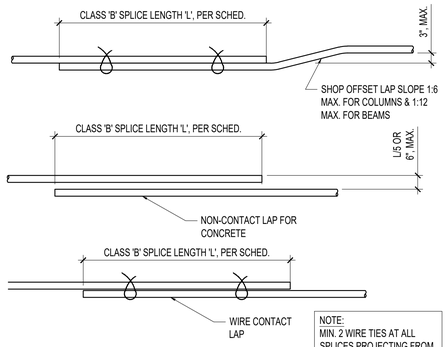

NOTE:
MIN. 2 WIRE TIES AT ALL SPLICES PROJECTING FROM FOOTING, TYP.

NOTES:

1. TOP BARS ARE HORIZONTAL REINFORCING WITH MORE THAN 12" OF CONCRETE BELOW BARS.
2. BOTTOM BARS INCLUDE ALL VERTICALS, ALL HORIZONTAL WALL REINFORCING, AND HORIZONTAL REINFORCING WITH LESS THAN 12" OF CONCRETE BELOW BARS.
3. A. USE CLASS B SPLICES U.N.O., ADJACENT BAR SPLICES SHALL BE STAGGERED THE GREATER OF THE LENGTH OF SPLICE OR 2'-0".
   B. USE CLASS C SPLICES WHERE NOTED.
   C. USE CLASS C SPLICES WHERE MORE THAN 49% OF BARS ARE TO BE SPLICED IN ONE LOCATION.
4. SMALLER BAR LAP LENGTH SHALL BE USED WHEN SPLICING DIFFERENT SIZE BARS.
5. INCREASE SPLICE LENGTH BY 33% FOR LIGHTWEIGHT CONCRETE.

BAR DEVELOPMENT LENGTH (Ld) SCHEDULE

BAR SIZE	Fc' = 2500 psi		Fc' = 3000 psi		Fc' = 4000 psi		Fc' = 4500 psi	
	TOP BARS	OTHER BARS	TOP BARS	OTHER BARS	TOP BARS	OTHER BARS	TOP BARS	OTHER BARS
#3	24"	18"	22"	17"	19"	15"	18"	15"
#4	32"	24"	29"	22"	25"	19"	24"	27"
#5	39"	30"	36"	28"	31"	24"	30"	23"
#6	47"	36"	43"	33"	37"	29"	35"	27"
#7	69"	53"	63"	48"	54"	42"	51"	40"
#8	78"	60"	72"	55"	62"	48"	59"	45"
#9	88"	68"	81"	62"	70"	54"	66"	51"
#10	98"	75"	90"	69"	78"	60"	73"	56"
#11	108"	83"	98"	76"	85"	66"	80"	62"

CLASS 'B' SPLICE LENGTH

BAR SIZE	Fc' = 2500 psi		Fc' = 3000 psi		Fc' = 4000 psi		Fc' = 4500 psi	
	TOP BARS	OTHER BARS	TOP BARS	OTHER BARS	TOP BARS	OTHER BARS	TOP BARS	OTHER BARS
#3	31"	24"	28"	22"	25"	20"	23"	20"
#4	41"	32"	38"	29"	33"	25"	31"	24"
#5	51"	39"	47"	36"	41"	31"	38"	30"
#6	61"	47"	56"	43"	49"	37"	46"	35"
#7	89"	69"	81"	63"	71"	54"	67"	51"
#8	102"	78"	93"	72"	81"	62"	76"	59"
#9	115"	88"	105"	81"	91"	70"	86"	66"
#10	127"	98"	116"	90"	101"	78"	95"	73"
#11	140"	108"	128"	98"	111"	85"	104"	80"

NOTES:

1. MINIMUM SPLICE LENGTH FOR BARS WITH CLASS 'B' SPLICE PER ACI-318-14, SECTION 12.2.
2. TOP BARS ARE HORIZONTAL BARS WITH MORE THAN 12" CONCRETE CAST IN THE MEMBER BOLOW THE REINFORCEMENT.
3. THESE BAR DEVELOPMENT LENGTH APPLY TO REGULAR OR NORMAL WEIGHT CONCRETE, MULTIPLY THE SPECIFIED DEVELOPMENT LENGTH BY 1.33 FOR LIGHT WEIGHT CONCRETE.
4. ALL DETAILING OF REINFORCEMENT SHALL COMPLY WITH THESE SCHEDULES UNLESS SPECIFICALLY DETAILED ON THE DRAWINGS.

TYP. REINF. DEVELOPMENT LENGTH & LAP SPLICE SCHEDULE — SCALE: N.T.S. — 4

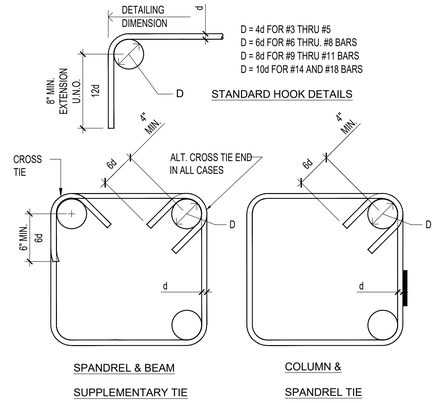

TYPICAL STANDARD HOOK DETAIL — SCALE: N.T.S. — 1

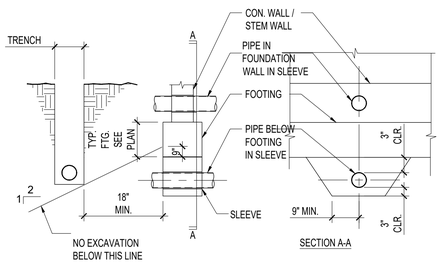

NOTE:

NO PIPE OR CONDUIT SHALL PASS HORIZONTALLY THROUGH FOOTING. PROVIDE SLEEVE MIN. 1" Ø LARGER THAN PIPE OR 1" FOAM WRAP.

PIPE OR CONDUIT AT FOOTING — SCALE: 1"=1'-0" — 11

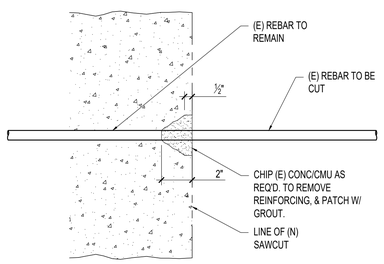

TYP. BAR TERMINATION — SCALE: 1"=1'-0" — 8

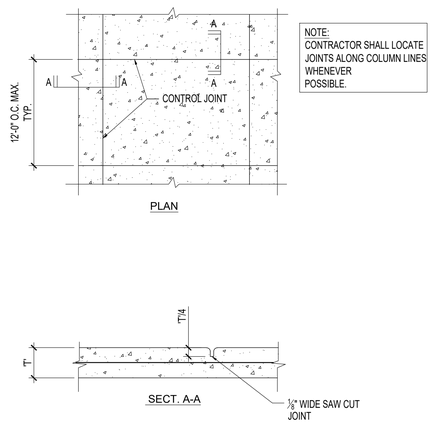

NOTE:
CONTRACTOR SHALL LOCATE JOINTS ALONG COLUMN LINES WHENEVER POSSIBLE.

TYPICAL SLAB ON GRADE DETAIL — SCALE: N.T.S. — 5

SCALE: N.T.S. — 2

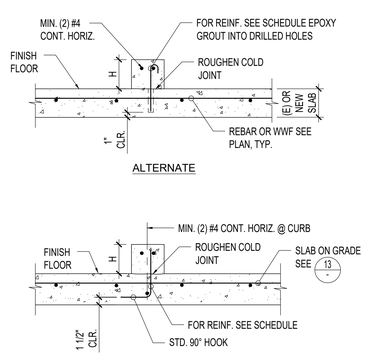

CURB REINFORCING SCHEDULE		
MAX. "H"	VERTICAL	HORIZ.
8"	#3 @ 18"	
18"	#4 @ 18"	
4'-0"	#4 @ 12"	#4 @ 12"

REINF. TO BE PLACED IN CURB WALL ℄

NOTE:

1. SEE ARCH'L. DWGS FOR CURB LOCATION & SIZE

CONCRETE CURB DETAIL — NTS — 12

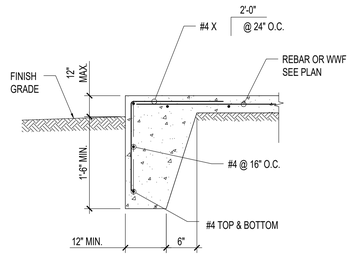

SLAB ON GRADE EDGE DETAIL — SCALE: 1"=1'-0" — 9

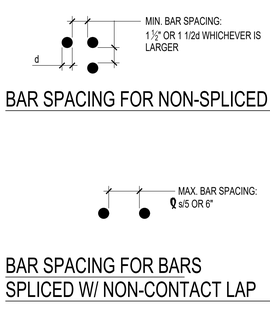

BAR SPACING — SCALE: N.T.S. — 6

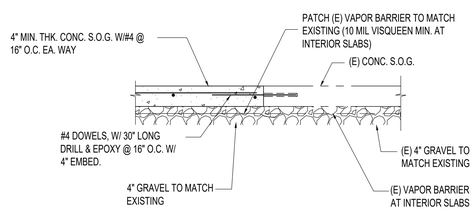

TYP. (N) S.O.G. TO (E) S.O.G. — SCALE: N.T.S. — 3

DIVISION OF THE STATE ARCHITECT

IDENTIFICATION STAMP
DIV. OF THE STATE ARCHITECT
APP: 03-123218 INC:
REVIEWED FOR
SS ☑ FLS ☑ ACS ☑
DATE: 07/11/2024

MOORPARK COLLEGE

7075 CAMPUS RD
MOORPARK, CA 93021
TEL: (805) 378 - 1400

PROJECT TITLE AND SCHOOL LOCATION

ADMINISTRATION BUILDING RENOVATION

7075 CAMPUS ROAD
MOORPARK, CA 91320

COMMISSIONED ARCHITECT

AMADOR

amador whitte architects, inc.
28328 AGOURA RD, 203 | AGOURA HILLS CA. 91301 | 805-558-4324

CONSULTANT

Orion Structural

Orion Structural Group, Inc.
220 East Thousand Oaks Boulevard, Suite 304
Thousand Oaks, California 91360 - 7734
Phone: 805.390.9242 Fax: 805.494.0418 O.S.G. #21610

STAMPS/SEALS

REGISTERED PROFESSIONAL ENGINEER
WILL A. LAMBERT
No. 5430
Exp. 06/30/2024
STRUCTURAL
STATE OF CALIFORNIA
12/22/2023

LICENSED ARCHITECT
JEAN ANN AMADOR
C-22205
APRIL 30, 2025
DATE
STATE OF CALIFORNIA

SHEET TITLE:

TYPICAL DETAILS

PROJECT NO: 21-MPC-040	PROJECT ARCH:
DRAWN: EN	CHECKED: WL

SHEET NUMBER:

S010

DATE: 12/22/23 SHEET: ___ OF ___

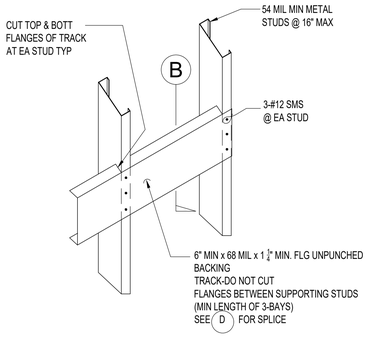

DETAIL A

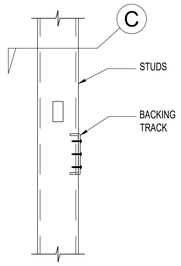

SECTION B

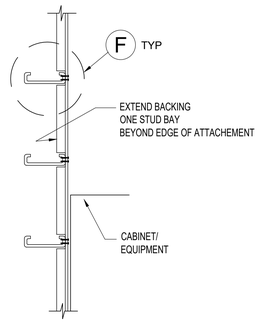

PLAN VIEW C

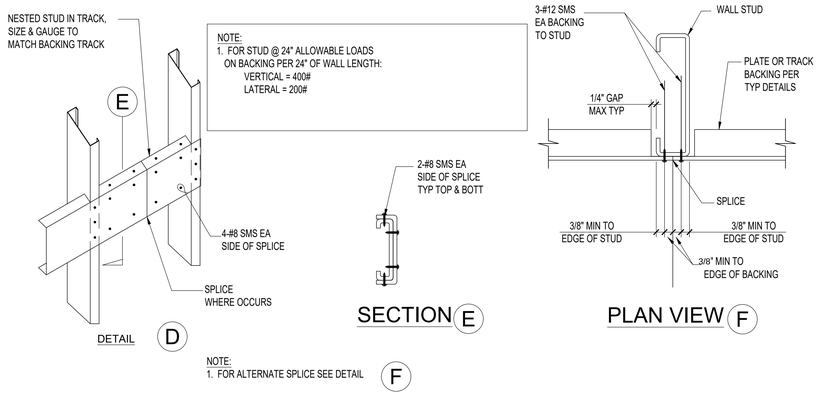

SECTION E

PLAN VIEW F

TYPICAL BACKING DETAIL — SCALE: 1"=1'-0" — 8

NON-BEARING STUD SCHED.				MIN. GROSS SECTION PROPERTIES		
MAX. WALL HT.	MIN. STUD SIZE	IDENTIFICATION	SPACING (O.C.)	A (IN^2)	S (IN^3)	I (IN^4)
13'-9" INTERIOR	3 5/8" x 20 GA. (6" & 8" STUDS FOR 6" & 8" WALLS)	3 5/8" x 20 GA. (6" & 8" STUDS FOR 6" & 8" WALLS)	24" O.C. MAX. (16" O.C. AT WALLS WITH TILE FINISHES)	0.275	0.346	0.692
	4" x 16 GA. (WHERE REQ'D., SEE NOTE #4)	4" x 16 GA. (WHERE REQ'D., SEE NOTE #4)		0.443	0.533	1.098

NOTES:
1. STUD SIZE BASED ON L/360 DEFLECTION LIMIT FOR EXT. WALLS, L/240 FOR INT. WALLS WITH NO ROCK OR MASONRY VENEER ATTACHED TO THE WALL.
2. STUD FLANGES ON BOTH SIDES OF THE WALL ARE CONT. ATTACHED TO GYP. BOARD, PLY., OR MTL. SIDING. WHERE CONT. ATTACHMENT DOES NOT OCCUR, PROVIDE HORIZONTAL STRAPS PER TYP. STRAPPING DETAIL
3. MAX. WALL HEIGHT IS THE MAXIMUM VERTICAL SPAN OF THE STUD BETWEEN ATTACHMENTS TO STRUCTURE OR DIAGONAL BRACES.
4. USE 18GA MIN. STUDS AT ATTACHMENTS OF EQUIPMENT, CABINETS, TOILET PARTITIONS, & LOCKERS.

METAL STUD SCHEDULE — SCALE: N.T.S. — 1

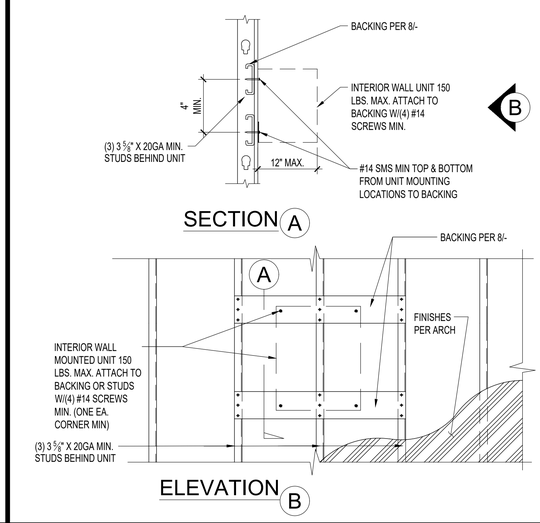

SECTION A

ELEVATION B

WALL MOUNTED UNIT SUPPORT DETAIL — SCALE: N.T.S. — 5

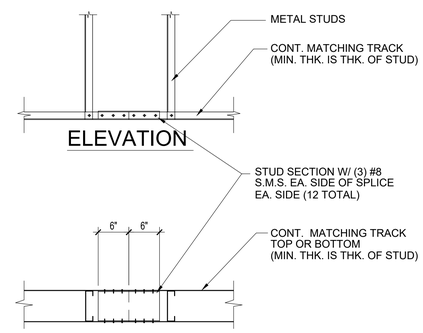

ELEVATION

PLAN

TRACK SPLICE — SCALE: N.T.S. — 2

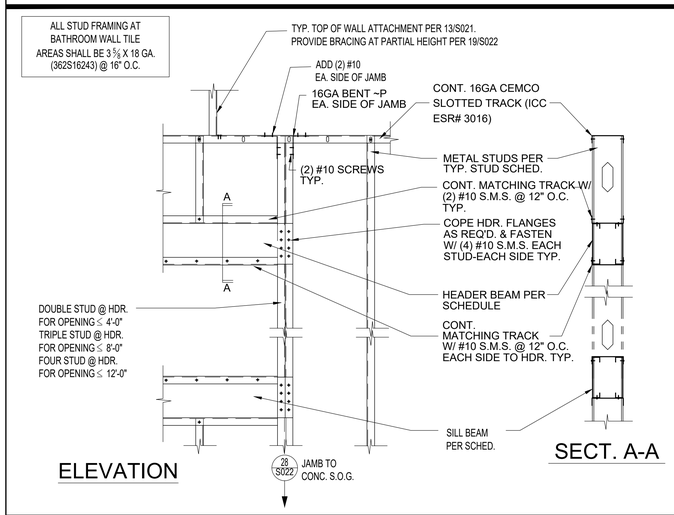

ELEVATION

SECT. A-A

HEADER & SILL SCHEDULE		
MAX.	HEADER & SILL SIZE	
OPENING WIDTH	NON LOAD-BEARING WALL	LOAD-BEARING WALL
4'-0"	362 S162-33	362 S162-33
8'-0"	600 S162-33	800 S162-43
12'-0"	800 S162-43	1000 S162-43

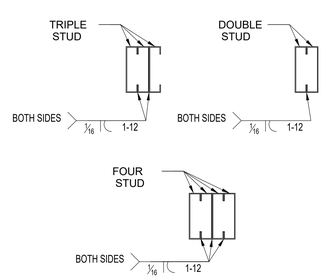

TYP. STUD MENDING

TYP. OPENING IN NEW METAL STUD WALL — SCALE: 1"=1'-0" — 9

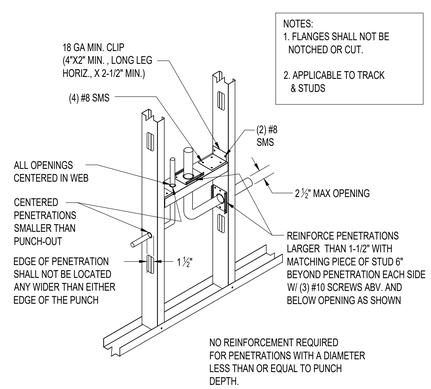

TYPICAL INTERIOR STUD WALL STUD PENETRATION — NTS — 6

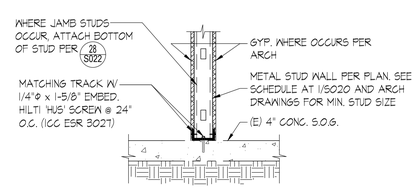

METAL STUD TO (E) CONC. SLAB — SCALE: N.T.S. — 3

DIVISION OF THE STATE ARCHITECT

IDENTIFICATION STAMP
DIV. OF THE STATE ARCHITECT
APP: 03-123218 INC:
REVIEWED FOR
SS ☑ FLS ☑ ACS ☑
DATE: 07/11/2024

MOORPARK COLLEGE

7075 CAMPUS RD
MOORPARK, CA 93021
TEL: (805) 378 - 1400

PROJECT TITLE AND SCHOOL LOCATION

ADMINISTRATION BUILDING RENOVATION

7075 CAMPUS ROAD
MOORPARK, CA 91320

COMMISSIONED ARCHITECT

AMADOR

amador whitte architects, inc.
28328 AGOURA RD, 203 | AGOURA HILLS CA, 91301 | 805-558-4324

CONSULTANT

Orion Structural

Orion Structural Group, Inc.
220 East Thousand Oaks Boulevard, Suite 304
Thousand Oaks, California 91360 - 7734
Phone: 805.390.9242 Fax: 805.494.0418 O.S.G. #21610

STAMPS/SEALS

REGISTERED PROFESSIONAL ENGINEER
BILL A. LAMBERT
No. 5430
Exp. 06/30/2024
STRUCTURAL
STATE OF CALIFORNIA

12/22/2023

LICENSED ARCHITECT
JEAN ANN AMADOR
C-22205
APRIL 30, 2025
DATE
STATE OF CALIFORNIA

SHEET TITLE:

TYPICAL DETAILS

PROJECT NO.: 21-MPC-040
PROJECT ARCH:
DRAWN: EN
CHECKED: WL
SHEET NUMBER:

S020

DATE: 12/22/23
SHEET: ___ OF ___

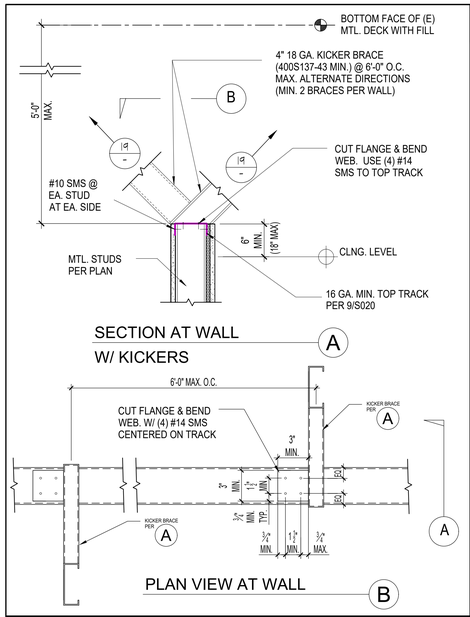

TOP OF PARTIAL HEIGHT WALL — SCALE: 1"=1'-0" — 22

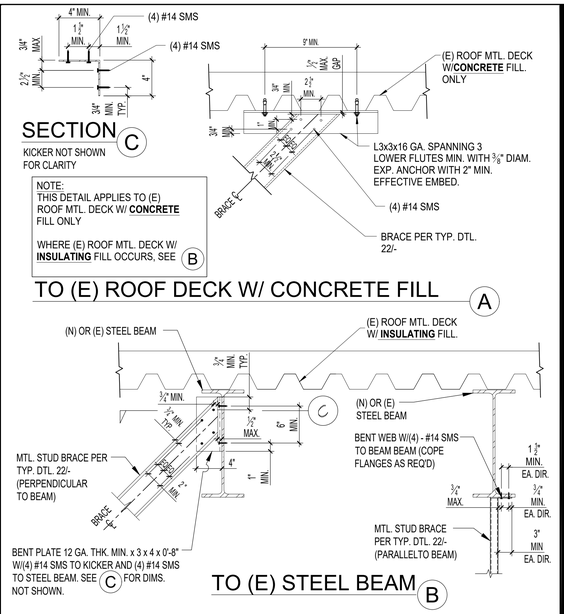

BRACE TO (E) STEEL BEAM ATTACHMENT — SCALE: 1"=1'-0" — 19

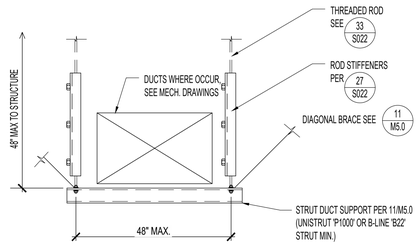

NOTES:
1. FOR RECTANGULAR DUCT HANGER RODS, ROD STIFFENERS, AND TRAPEZE ANGLE HANGERS MINIMUM SIZES AND SPACING SEE MEP DRAWINGS
2. NO POP RIVETS ALLOWED. USE SELF-TAPPING SHEETMETAL SCREWS ONLY.

TYP. HANGING DUCT SUPPORT DETAIL — NTS — 16

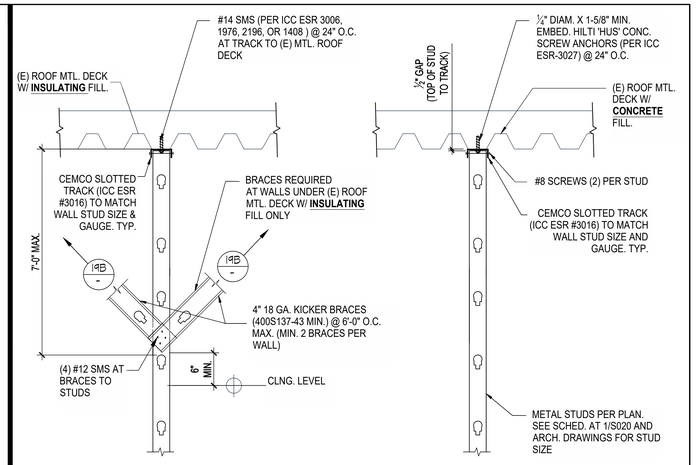

NOTE:
SEE A FOR ITEMS NOT NOTED

TOP OF FULL HT. WALL ATTACHMENT — SCALE: 1"=1'-0" — 13

CEILING JOIST SCHEDULE		
	BRACED JOIST	
STUD JOIST SIZE & SPACING	MAX SPAN	TRACK THICKNESS
300S162-33 @ 16"oc	11'-0"	54 MIL
600S162-33 @ 16"oc	14'-0"	54 MIL

NOTES:
1. SCHEDULE ABOVE FOR NON-ACCESIBLE CEILINGS ONLY

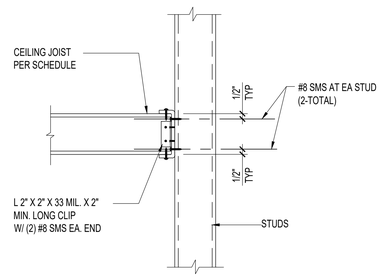

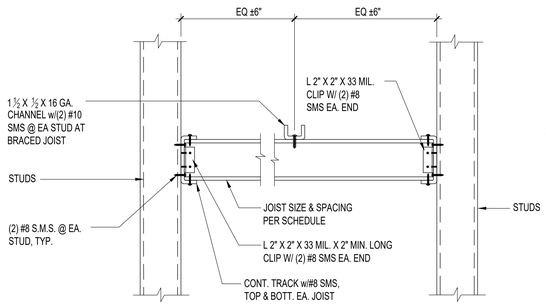

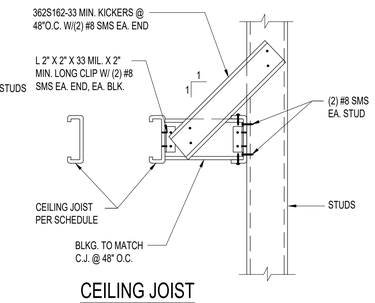

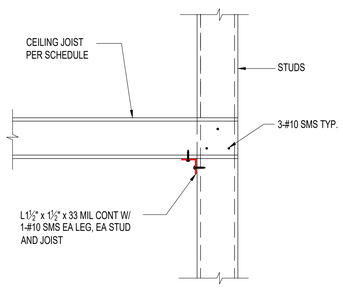

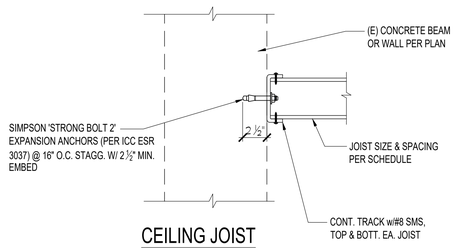

TYP. CEILING JOISTS DETAIL — SCALE: 1"=1'-0" — 21

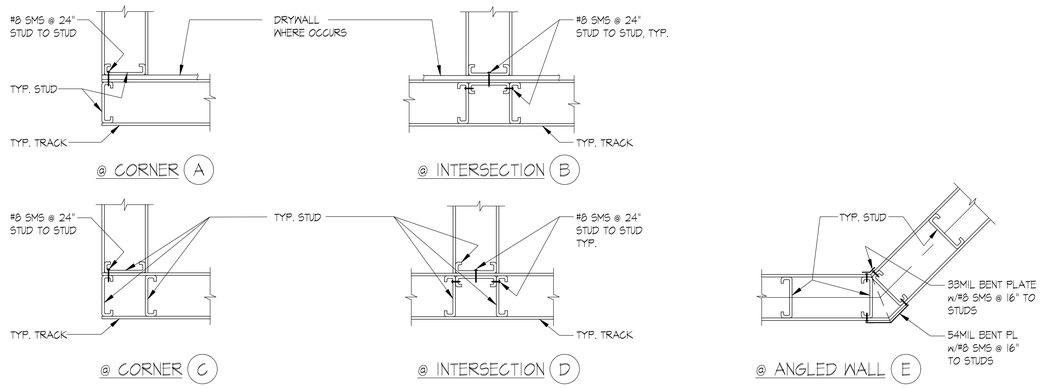

WALL INTERSECTIONS — SCALE: 1"=1'-0" — 14

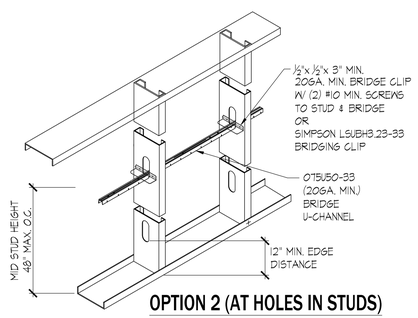

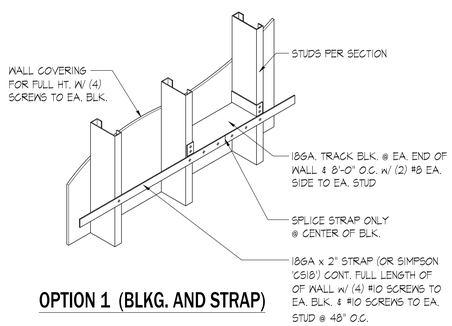

NOTE:
BRIDGING REQUIRED AT MID-HEIGHT OF PARTITIONS AND SHEARWALLS ON NON SHEATHED SIDES OF WALL & WHERE NOTED ELSEWHERE.

STUD WALL BRIDGING — SCALE: 1"=1'-0" — 15

DIVISION OF THE STATE ARCHITECT

IDENTIFICATION STAMP
DIV. OF THE STATE ARCHITECT
APP: 03-123218 INC:
REVIEWED FOR
SS ☑ FLS ☑ ACS ☑
DATE: 07/11/2024

MOORPARK COLLEGE

7075 CAMPUS RD
MOORPARK, CA 93021
TEL: (805) 378 - 1400

PROJECT TITLE AND SCHOOL LOCATION

ADMINISTRATION BUILDING RENOVATION

7075 CAMPUS ROAD
MOORPARK, CA 91320

COMMISSIONED ARCHITECT

AMADOR

amador whitte architects, inc.
28328 AGOURA RD, 203 | AGOURA HILLS CA, 91301 | 805-558-4324

CONSULTANT

Orion Structural

Orion Structural Group, Inc.
220 East Thousand Oaks Boulevard, Suite 304
Thousand Oaks, California 91360 - 7734
Phone: 805.390.9242 Fax: 805.494.0418 O.S.G. #21600

STAMPS/SEALS

REGISTERED PROFESSIONAL ENGINEER
WILL A. LAMBERT
No. 5430
Exp. 06/30/2024
STRUCTURAL
STATE OF CALIFORNIA
12/22/2023

LICENSED ARCHITECT
JEAN ANN AMADOR
C-22205
APRIL 30, 2025
DATE
STATE OF CALIFORNIA

SHEET TITLE:

TYPICAL DETAILS

PROJECT NO: 21-MPC-040
PROJECT ARCH:
DRAWN: EN
CHECKED: WL
SHEET NUMBER:

S021

DATE: 12/22/23
SHEET: ___ OF ___

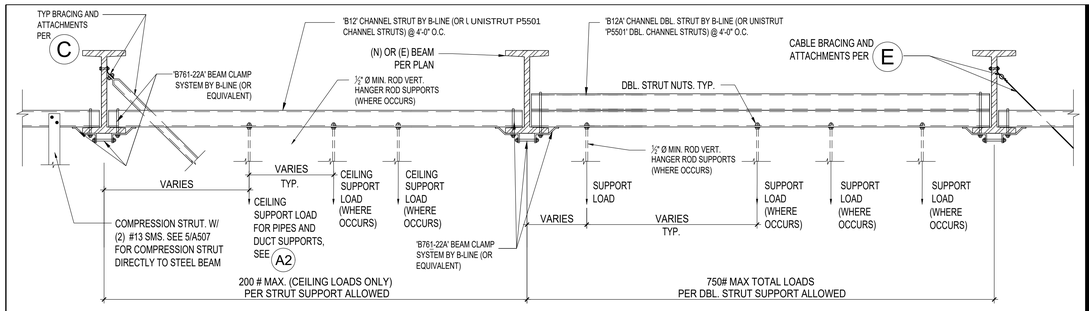

SINGLE STRUT SUPPORT- CEILING LOADS ONLY A1

DOUBLE STRUT SUPPORTS A1

SUPPORTS TO STEEL BEAM TYPICAL A

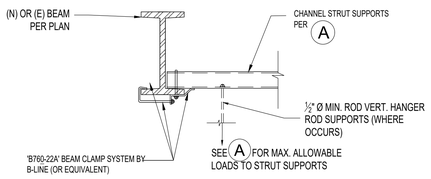

SUPPORTS TO STEEL BEAM AT ENDS B

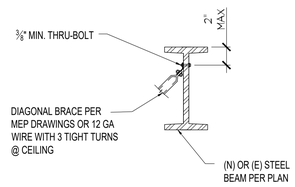

TYP. DIAGONAL BRACING TO STEEL BEAM ATTACHMENT C

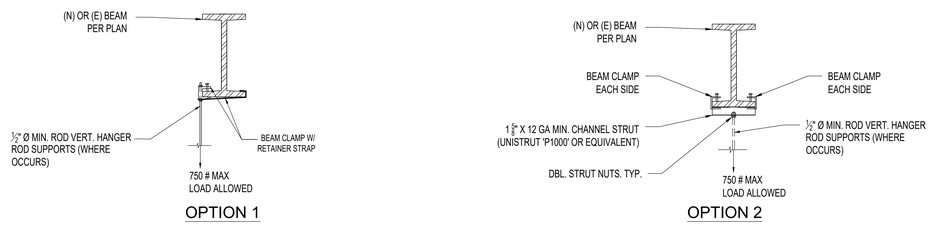

OPTION 1 OPTION 2

HANGER ROD TO BEAM ATTACHMENT D

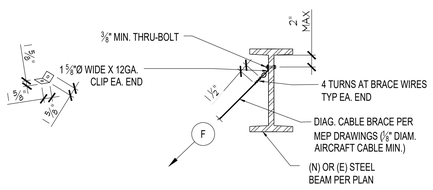

DIAGONAL CABLE BRACING TO STEEL BEAM ATTACHMENT E

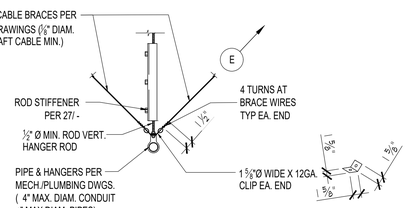

PIPE CABLE BRACING (NOT REQ'D. AT HANGER RODS < 6") F

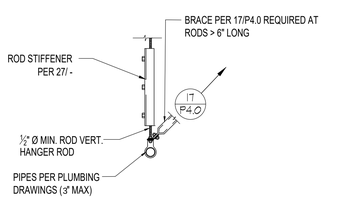

PLUMBING PIPE SUPPORT DETAIL TRANSVERSE BRACING G

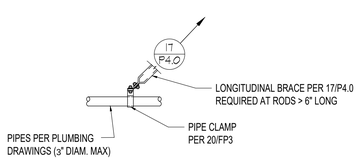

PLUMBING PIPE SUPPORT DETAIL LONGITUDINAL BRACING H

NOTES:
1. FOR SPRINKLER PIPE S (6" DIAM. MAX) BRACING AND HANGER RODS SEE 10/FP-3, 20/FP-3 & 21/FP-3
2. SEE 5/A507 FOR COMPRESSION STRUT DIRECTLY TO STEEL BEAM
3. SEE 17/P4.0 FOR PLUMBING BRACE REQUIREMENTS
4. BRACE SPACING WHERE NOT SPECIFICALLY NOTED SHALL BE 20' MAX TRANSVERSE AND 40' MAX LONGITUDINAL

TYPICAL HANGER RODS AND BRACING CONNECTION TO STRUCTURE SCALE: 1"=1'-0" 33

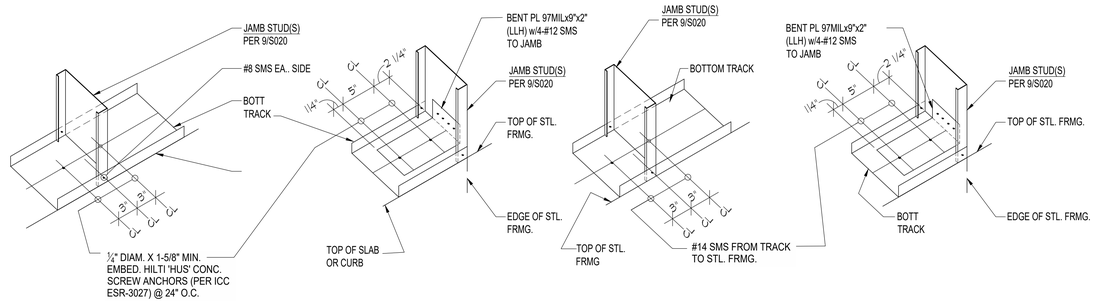

CONT TRACK A END OF TRACK B CONT TRACK C END OF TRACK D

AT CONCRETE FRAMING AT STEEL FRAMING

TYPICAL JAMB AND TRACK CONNECTIONS SCALE: 1"=1'-0" 28

TRACK DESIGNATION	'W'	¼" 'W'	12 'W'
250TXXX-XX	2 ¼"	½"	⅜"
400TXXX-XX	4"	2"	1"
600TXXX-XX	6"	3"	¼"
800TXXX-XX	8"	4"	2"

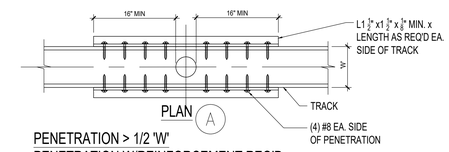

PLAN A

PENETRATION > 1/2 'W'
PENETRATION W/REINFORCEMENT REQ'D

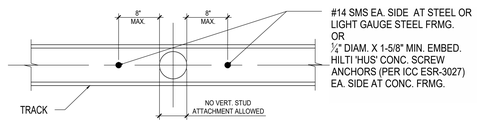

PLAN A

PENETRATION > 1/2 'W'
PENETRATION W/REVISED ATTACHMENT TO BLDG

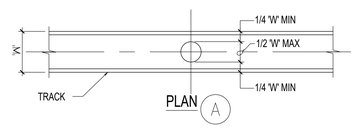

PLAN A

PLAN VIEW-PENETRATION < 1/2 'W' PENETRATION NO REINFORCEMENT REQ'D

MAX. PENETRATION THRU TRACKS (TOP OR BOTTOM) NTS 26

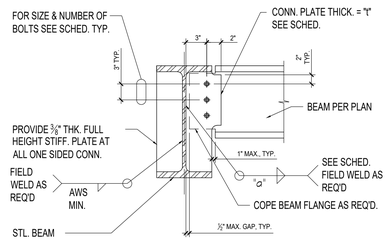

BEAM CONNECTION SCHEDULE				
BEAM / GIRDER	CONNECTION BOLT - A325X			
	NO. OF BOLTS	SIZE OF BOLTS	PLATE THICK "t"	WELD SIZE "a", "b"
W8, W10	2	⅞" Φ	⅜"	¼"
W12, W14	3	⅞" Φ	⅜"	5/16"

NOTES:
1. ALL FILLET WELD SIZES SHOWN ARE MINIMUM WELD SIZE. WHERE WELD SIZE SHOWN ARE SMALLER THAN AWS MINIMUM WELD SIZE, AWS MINIMUM WELD SIZE SHALL BE USED.
2. FIELD WELD CONNECTION PLATES WHERE (N) MEMBERS CONNECT TO (E) MEMBERS.

NOTE:
USE STD. HOLES AT STEEL BEAM & SHEAR PLATE, TYP.

TYP. BEAM CONNECTION DETAIL & SCHEDULE SCALE: 1"=1'-0" 30

Rod Stiffener Chart		
Threaded Rod Diameter	Dim. "A" Maximum Rod Length Without Stiffener	Dim. "B" Maximum Spacing Between Rod Stiffeners
3/8"	16"	13"
1/2"	22"	18"
5/8"	28"	23"
3/4"	34"	28"
7/8"	40"	33"
1"	46"	38"

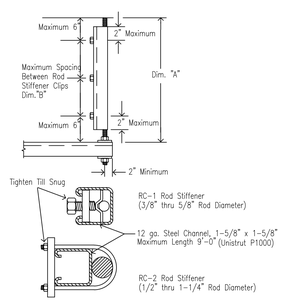

TYPICAL ROD STIFFENER DETAIL

TYP. ROD STIFFENER SCALE: 1"=1'-0" 27

DIVISION OF THE STATE ARCHITECT

IDENTIFICATION STAMP
DIV. OF THE STATE ARCHITECT
APP: 03-123218 INC:
REVIEWED FOR
SS ☑ FLS ☑ ACS ☑
DATE: 07/11/2024

MOORPARK COLLEGE

7075 CAMPUS RD
MOORPARK, CA 93021
TEL: (805) 378 - 1400

PROJECT TITLE AND SCHOOL LOCATION

ADMINISTRATION BUILDING RENOVATION

7075 CAMPUS ROAD
MOORPARK, CA 91320

COMMISSIONED ARCHITECT

AMADOR

amador whitte architects, inc.
28328 AGOURA RD, 203 | AGOURA HILLS CA, 91301 | 805-558-4334

CONSULTANT

Orion Structural

Orion Structural Group, Inc.
233 East Thousand Oaks Boulevard, Suite 304
Thousand Oaks, California 91360 - 7734
Phone: 805.390.9242 Fax: 805.494.0418 O.S.G. #21610

STAMPS/SEALS

REGISTERED PROFESSIONAL ENGINEER
DALE A. LAMBERT
No. 5430
Exp. 06/30/2024
STRUCTURAL
STATE OF CALIFORNIA
12/22/2023

LICENSED ARCHITECT
JEAN ANN AMADOR
C-22205
APRIL 30, 2025
STATE OF CALIFORNIA

SHEET TITLE:

TYPICAL DETAILS

PROJECT NO.: 21-MPC-040
PROJECT ARCH:
DRAWN: EN
CHECKED: WL
SHEET NUMBER:
S022
DATE: 12/22/23
SHEET: ___ OF ___

-

SCALE: 1"=1'-0" | 10

SCALE: 1"=1'-0" | 7

SCALE: 1"=1'-0" | 4

SCALE: 1"=1'-0" | 1

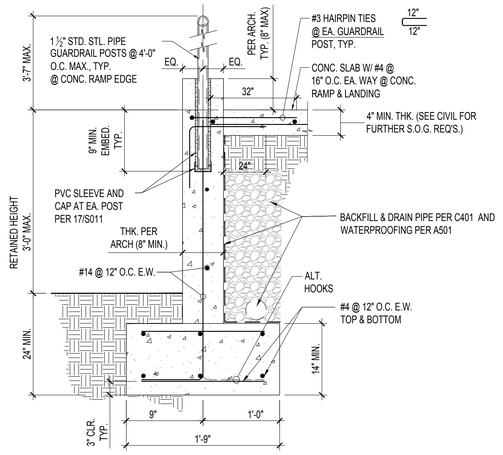

SECTION AT RAMP/LANDING EDGE (A)

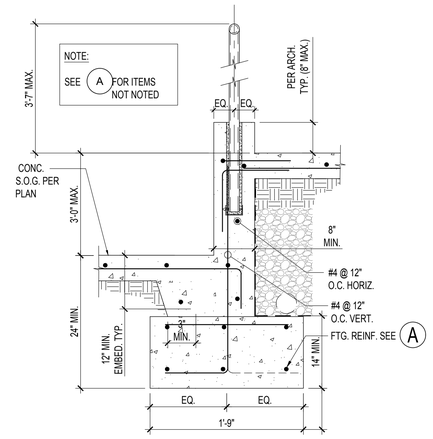

SECTION AT RAMP WITH S.O.G. AT FTG. (B)

-

SCALE: 1"=1'-0" | 11

-

SCALE: 1"=1'-0" | 8

TYPICAL SECTION AT CONCRETE RAMP & LANDING ON GRADE

SCALE: 1"=1'-0" | 2

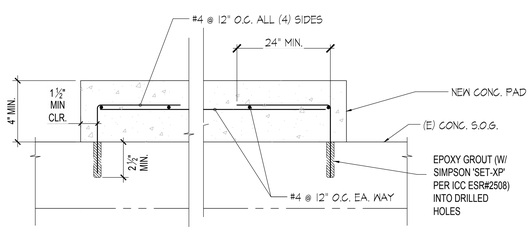

-

SCALE: 1"=1'-0" | 12

HOUSEKEEPING PAD AT UNIT ANCHORAGE

SCALE: 1"=1'-0" | 9

-

SCALE: 1"=1'-0" | 6

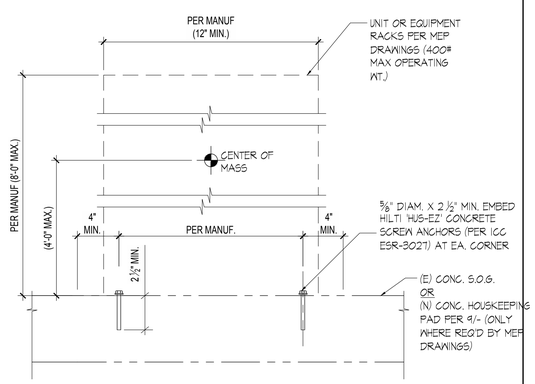

FLOOR MOUNTED UNITS & RACKS ANCHORAGE

SCALE: 1"=1'-0" | 3

DIVISION OF THE STATE ARCHITECT

IDENTIFICATION STAMP
DIV. OF THE STATE ARCHITECT
APP: 03-123218 INC:
REVIEWED FOR
SS ☑ FLS ☑ ACS ☑
DATE: 07/11/2024

MOORPARK COLLEGE

7075 CAMPUS RD
MOORPARK, CA 93021
TEL: (805) 378 - 1400

PROJECT TITLE AND SCHOOL LOCATION

ADMINISTRATION BUILDING RENOVATION

7075 CAMPUS ROAD
MOORPARK, CA 91320

COMMISSIONED ARCHITECT

AMADOR

amador whitte architects, inc.
28328 AGOURA RD, 203 | AGOURA HILLS CA. 91301 | 805-558-4324

CONSULTANT

Orion Structural

Orion Structural Group, Inc.
320 East Thousand Oaks Boulevard, Suite 304
Thousand Oaks, California 91360 - 7734
Phone: 805.390.9242 Fax: 805.494.0418 O.S.G. #21600

STAMPS/SEALS

REGISTERED PROFESSIONAL ENGINEER
WILL A. LAMBERT
No. 5430
Exp. 06/30/2024
STRUCTURAL
STATE OF CALIFORNIA

12/22/2023

LICENSED ARCHITECT
JEAN ANN AMADOR
C-22295
APRIL 30, 2025
DATE
STATE OF CALIFORNIA

SHEET TITLE:

TYPICAL DETAILS

PROJECT NO: 21-MPC-040	PROJECT ARCH:
DRAWN: EN	CHECKED: WL
SHEET NUMBER: S023	
DATE: 12/22/23	SHEET: ___ OF ___

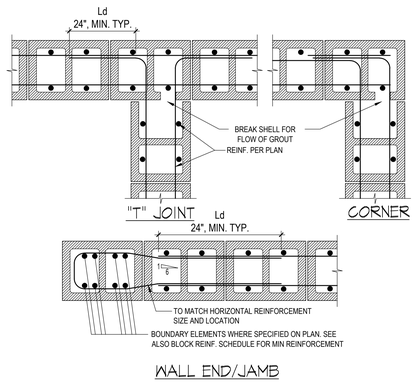

REINF. STEEL AT CMU END AND INTERSECTIONS

SCALE: 1"=1'-0" | 10

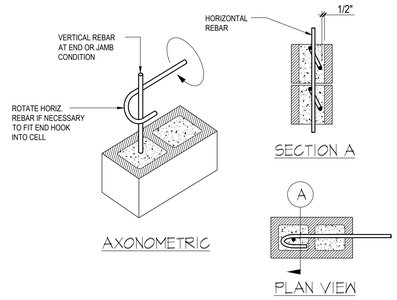

HOOK ARRANGEMENT AT WALL END

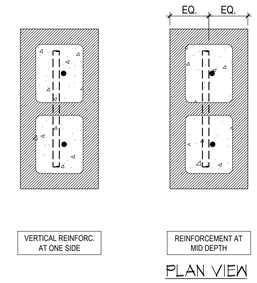

TYPICAL REINF. PLACEMENT IN CMU WALL

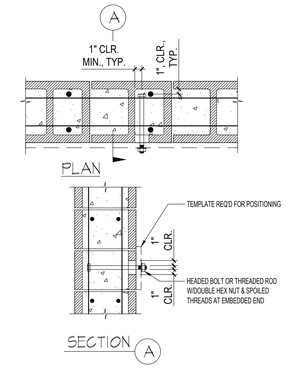

EMBEDDED BOLTS AT CMU WALL

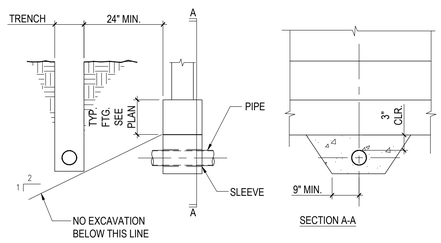

NOTE: NO PIPE SHALL PASS THROUGH FOOTING. PROVIDE SLEEVE MIN. 1" Ø LARGER THAN PIPE.

TYPICAL PIPE AT FOOTING

SCALE: 1"=1'-0" | 11

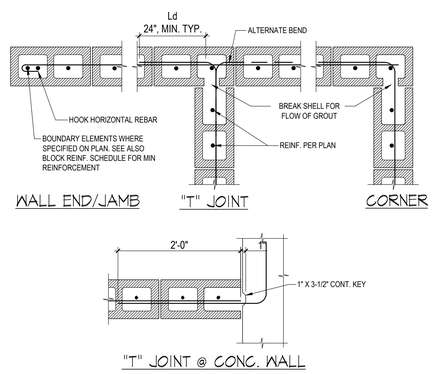

REINFORCING STEEL AT CMU WALL

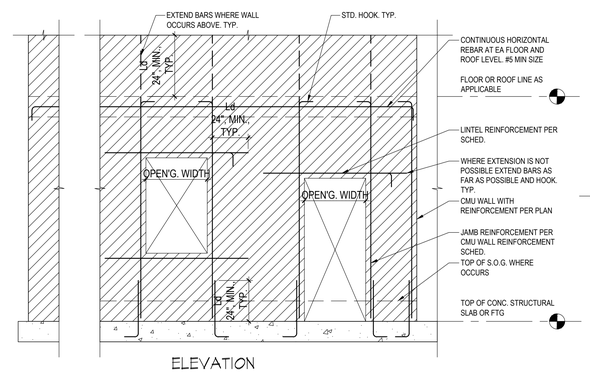

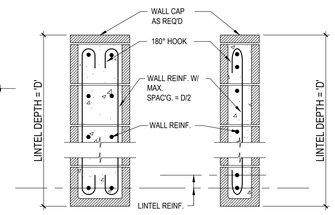

LINTEL REINFORCEMENT SCHEDULE

OPNG WIDTH	MIN. DEPTH 'D'	REINF.	NOTES
UP TO 5'-0"	18"	2-#4	(2) - #4 BARS AT TOP & BOTT.
5'-1" TO 7'-0"	24"	2-#5	(2) - #5 BARS AT TOP & BOTT.
7'-1" TO 10'-0"	24"	2-#6	(2) - #6 BARS AT TOP & BOTT.

TYPICAL MINIMUM REINF. AT CMU WALL OPENINGS AND LINTELS

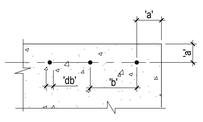

WHERE: 'a' IS THE CLEAR COVER
'b' IS THE CLEAR SPACING
'db' IS THE BAR DIA.

NOTES:
1. LENGTHS SHOWN ARE FOR GRADE 60 UNCOATED BARS.
2. LENGTHS SHOWN ARE IN INCHES.
3. BAR BUNDLES ARE NOT ALLOWED

TENSION LAP SPLICE SCHEDULE

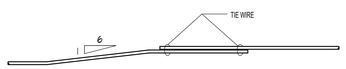

OFFSET & SPLICES

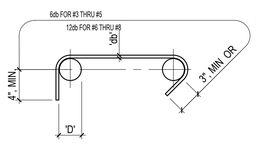

MIN. BEND DIA. (STIRRUPS & TIES)

BAR	D
#3	1 1/2"
#4	2"
#5	2 1/2"
#6	4 1/2"

STANDARD HOOK DETAILS FOR STIRRUPS & TIES

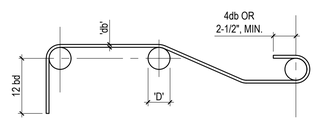

MIN.BEND DIA. (PRINCIPAL REINF.)

D = 6db FOR #3 THRU #8
D = 8db FOR #9

STANDARD HOOK DETAILS FOR PRINCIPAL REINFORCEMENT

DEVELOPMENT LENGTH (bd) / LAP SPLICE

BAR SIZE	1500 PSI CMU f'm		2000 PSI CMU f'm		2500 PSI CMU f'm		3000 PSI CMU f'm	
	1-LAYER	2-LAYER	1-LAYER	2-LAYER	1-LAYER	2-LAYER	1-LAYER	2-LAYER
#3	16	16	14	14	12	12	11	12
#4	21	26	18	22	16	20	15	18
#5	26	40	22	35	20	31	18	28
#6	49	74	42	64	38	58	34	53
#7	69	101	60	87	53	78	49	71
#8	108	151	93	131	84	117	76	107
#9	143	193	124	167	111	149	102	136

TYPICAL MASONRY REINF. DETAILS AND TENSION LAP SPLICE SCHEDULE

SCALE: 1"=1'-0" | 6

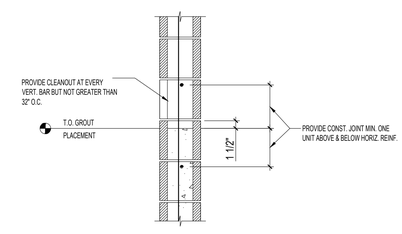

NOTE:
1. PROVIDE CONSTRUCTION JOINTS WHEN GROUTING IS STOPPED FOR MORE THAN 1 HOUR.

TYPICAL HORIZONTAL CONSTRUCTION JOINT

SCALE: 1"=1'-0" | 3

DIVISION OF THE STATE ARCHITECT

IDENTIFICATION STAMP
DIV. OF THE STATE ARCHITECT
APP: 03-123218 INC:
REVIEWED FOR
SS ☑ FLS ☑ ACS ☑
DATE: 07/11/2024

MOORPARK COLLEGE

7075 CAMPUS RD
MOORPARK, CA 93021
TEL: (805) 378 - 1400

PROJECT TITLE AND SCHOOL LOCATION

ADMINISTRATION BUILDING RENOVATION

7075 CAMPUS ROAD
MOORPARK, CA 91320

COMMISSIONED ARCHITECT

AMADOR

amador whitte architects, inc.
28328 AGOURA RD, 203 | AGOURA HILLS CA, 91301 | 805-558-4334

CONSULTANT

Orion Structural

Orion Structural Group, Inc.
210 East Thousand Oaks Boulevard, Suite 304
Thousand Oaks, California 91360 - 7734
Phone: 805.390.9242 Fax: 805.494.0418 O.S.G. #21600

STAMPS/SEALS

REGISTERED PROFESSIONAL ENGINEER
WILL A. LANSKERT
No. 5430
Exp. 06/30/2024
STRUCTURAL
STATE OF CALIFORNIA
12/22/2023

LICENSED ARCHITECT
JEAN ANN AMADOR
C-22205
APRIL 30, 2025
DATE
STATE OF CALIFORNIA

SHEET TITLE:

TYPICAL DETAILS

PROJECT NO.: 21-MPC-040
PROJECT ARCH:
DRAWN: EN
CHECKED: WL
SHEET NUMBER:

S024

DATE: 12/22/23
SHEET: ___ OF ___

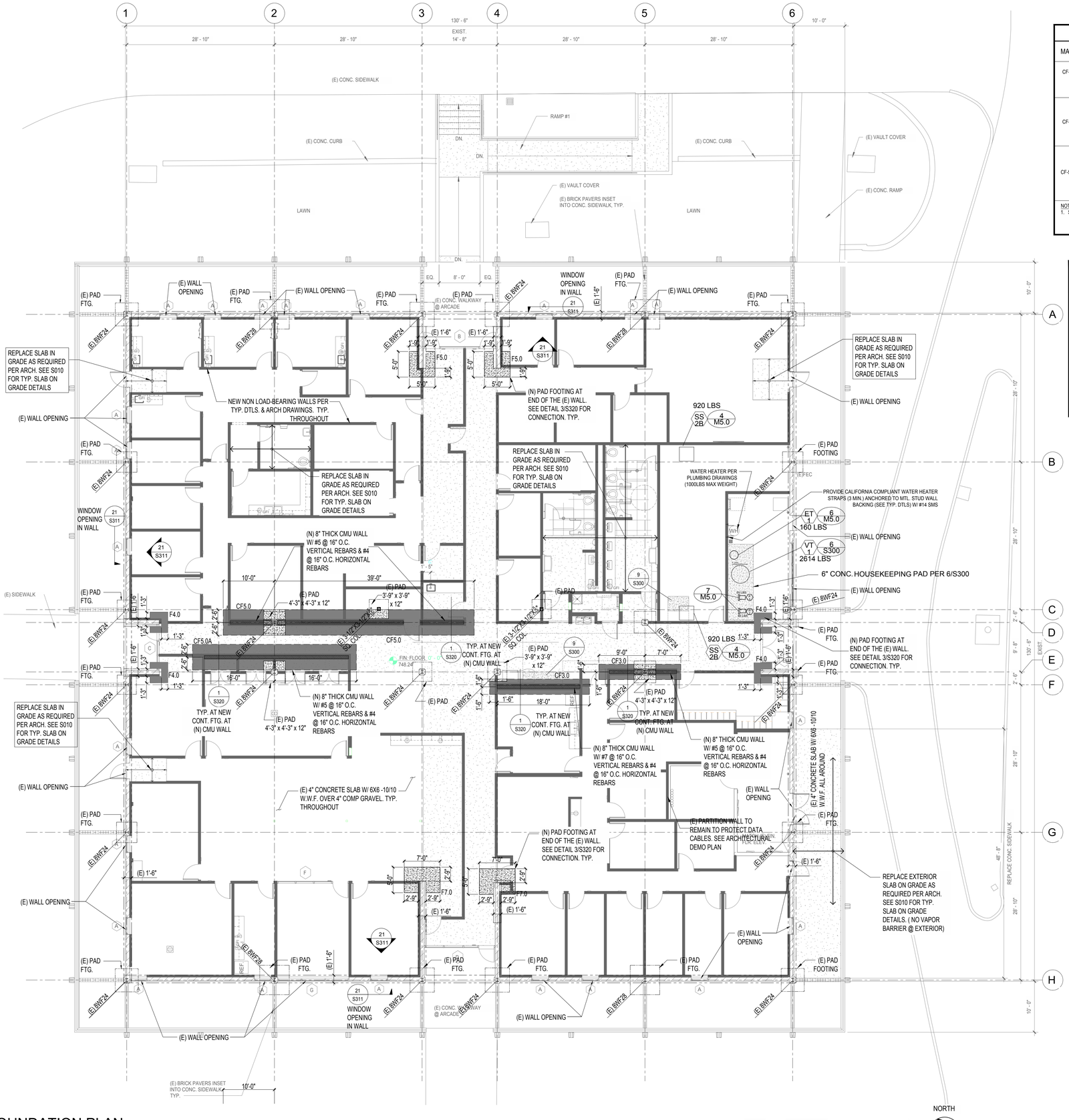

1 FOUNDATION PLAN
1/8" = 1'-0"

CONTINUOUS FOOTING SCHEDULE

MARK	WIDTH	THICKNESS	REINFORCEMENT	DEPTH
CF-3.0	3'-0"	18" MIN.	#7 @ 7" O.C. CONT. TOP AND BOTTOM PARALLEL TO LENGTH OF FTG. #5 @ 9" O.C. TOP AND BOTTOM PARALLEL TO WIDTH OF FTG.	24" MIN. INTO COMPACTED SOIL
CF-5.0	5'-0"	18" MIN.	#7 @ 12" O.C. CONT. TOP PARALLEL TO LENGTH OF FTG. #7 @ 9" O.C. CONT. BOTTOM PARALLEL TO LENGTH OF FTG. #5 @ 9" O.C. TOP AND BOTTOM PARALLEL TO WIDTH OF FTG.	24" MIN. INTO COMPACTED SOIL
CF-5.0A	5'-0"	18" MIN.	#7 @ 6.5" O.C. CONT. TOP AND BOTTOM PARALLEL TO LENGTH OF FTG. #5 @ 9" O.C. CONT. BOTTOM PARALLEL TO WIDTH OF FTG. #5 @ 9" O.C. TOP PARALLEL TO WIDTH OF FTG.	24" MIN. INTO COMPACTED SOIL

NOTE:
1. SOIL ENGINEERS TO VERIFY ALL FOOTING DEPTHS PRIOR TO PLACEMENT OF REINFORCING STEEL

PAD FOOTING SCHEDULE

MARK	WIDTH	THICKNESS	REINFORCEMENT	DEPTH
F-4.0	4'-0"SQ.	18" MIN.	(5) #5 BARS EA WAY AT. TOP & BOTT	24" MIN. INTO COMPACTED SOIL
F-5.0	5'-0"SQ	18" MIN.	(8) #5 BARS EA WAY AT. BOTT (7) #7 BARS EA WAY AT. TOP	24" MIN. INTO COMPACTED SOIL
F-7.0	5'-0" x 7'-0"	18" MIN.	(11) #5 TOP BARS EA. WAY (11) #7 BOTTOM BARS NORTH-SOUTH (12) #5 BOTTOM BARS EAST-WEST	24" MIN. INTO COMPACTED SOIL

NOTE:
1. SOIL ENGINEERS TO VERIFY ALL FOOTING DEPTHS PRIOR TO PLACEMENT OF REINFORCING STEEL

(N) CONCRETE SLAB ON GRADE NOTE

TYPICAL (N) CONCRETE SLAB ON GRADE SHALL BE 4" THICK WITH #4 @ 18" O.C. EA WAY MID-HT. OVER AN 10 MIL. VISQUEEN VAPOR BARRIER OVER 4" OF CRUSH GRAVEL OVER COMPACTED GRADE.

DIVISION OF THE STATE ARCHITECT

IDENTIFICATION STAMP
DIV. OF THE STATE ARCHITECT
APP: 03-123218 INC:
REVIEWED FOR
SS ☑ FLS ☑ ACS ☑
DATE: 07/11/2024

MOORPARK COLLEGE

7075 CAMPUS RD
MOORPARK, CA 93021
TEL: (805) 378 - 1400

PROJECT TITLE AND SCHOOL LOCATION

ADMINISTRATION BUILDING RENOVATION

7075 CAMPUS ROAD
MOORPARK, CA 91320

COMMISSIONED ARCHITECT

AMADOR

amador whitte architects, inc.
28328 AGOURA RD, 203 | AGOURA HILLS CA, 91301 | 805-558-4334

CONSULTANT

Orion Structural

Orion Structural Group, Inc.
220 East Thousand Oaks Boulevard, Suite 304
Thousand Oaks, California 91360 - 7734
Phone: 805.390.9242 Fax: 805.494.0918 O.S.G. #21610

STAMPS/SEALS

REGISTERED PROFESSIONAL ENGINEER
WILL A. LAMBERT
No. 5430
Exp. 06/30/2024
STRUCTURAL
STATE OF CALIFORNIA
12/22/2023

LICENSED ARCHITECT
SEAN ANN AMADOR
C-22205
APRIL 30, 2025
DATE
STATE OF CALIFORNIA

SHEET TITLE:

FOUNDATION PLAN

PROJECT NO: 21-MPC-040
PROJECT ARCH:
DRAWN: EN
CHECKED: WL
SHEET NUMBER:

S108

DATE: 12/22/23
SHEET: ___ OF ___

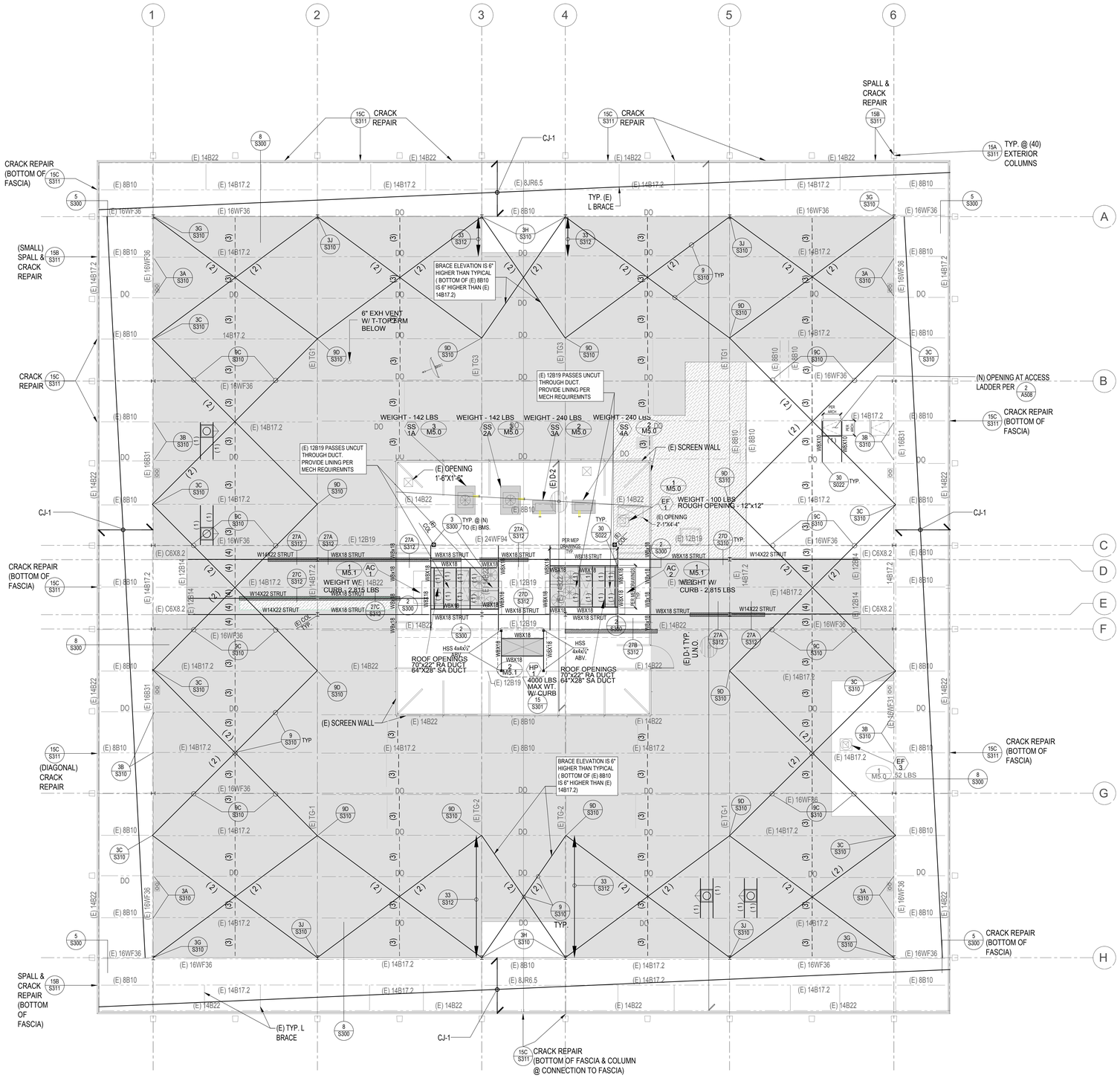

1 ROOF FRAMING PLAN
1/8" = 1'-0"

NORTH

0' 4' 8' 16' 32'

ROOF FRAMING LEGEND

(E) D-1 — INDICATES (E) METAL DECK W/ INSULATING FILL

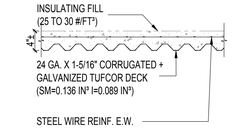

(E) D-2 — INDICATES (E) METAL DECK W/ LIGHT WEIGHT CONC. FILL

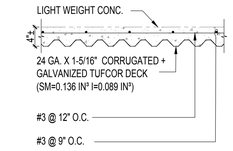

(1) — INDICATES L3 X 3 X ¼ AT ROOF PENETRATION PER 4/S300

(2) — INDICATES HSS 4 x 4 x ½" MIN BRACES AT EXISTING ROOF BEAMS PER 3C/S310 & 9/S310 TYP. U.N.O.

(3) — INDICATES HSS 4 x 4 x ½" MIN STRUT AT EXISTING ROOF BEAMS PER 19/S311 TYP. U.N.O.

(4) — INDICATES HSS 4 x 4 x ½" MIN STRUT AT EXISTING ROOF BEAMS PER 19/S311 TYP. U.N.O.

INDICATES CHANNEL STRUTS @ 4'-0" O.C. MAX AT CEILING AND DUCT SUPPORTS AT (E) STEEL BEAMS PER 33/S022

INDICATES MTL. JOIST CEILING FRAMING PER 21/S021 AND TYP DETAILS.

CJ-1 — EXTERIOR SOFFIT CEILING JOISTS 6" x 20 GA MIN. (600S162-33) PER 8/S300 U.N.O.

INDICATES NEW CMU WALLS BELOW

SPRAY-ON FIREPROOFING:

EXISTING STEEL BEAMS HAVE SPRAY-ON FIREPROOFING. SCRAPE OFF SECTION OF FIREPROOFING WHERE NEEDED FOR NEW CONNECTION TO EXISTING FRAMING. RE-APPLY FIREPROOFING AT EXISTING BEAM AND NEW CONNECTION AREA TO MAINTAIN FIRE RATING FOR THE EXISTING BEAM.

NEW SPRAY-ON FIREPROOFING REQUIRED FOR ALL NEW BEAMS THAT FRAME OPENINGS IN ROOF DIAPHRAGM.

NEW SEISMIC BRACES AND STRUTS DO NOT REQUIRE SPRAY-ON FIREPROOFING.

DIVISION OF THE STATE ARCHITECT

IDENTIFICATION STAMP
DIV. OF THE STATE ARCHITECT
APP: 03-123218 INC:
REVIEWED FOR
SS ☑ FLS ☑ ACS ☑
DATE: 07/11/2024

MOORPARK COLLEGE

7075 CAMPUS RD
MOORPARK, CA 93021
TEL: (805) 378 - 1400

PROJECT TITLE AND SCHOOL LOCATION

ADMINISTRATION BUILDING RENOVATION

7075 CAMPUS ROAD
MOORPARK, CA 91320

COMMISSIONED ARCHITECT

AMADOR

amador whitte architects, inc.
28328 AGOURA RD, 203 | AGOURA HILLS CA, 91301 | 805-558-4334

CONSULTANT

Orion Structural

Orion Structural Group, Inc.
220 East Thousand Oaks Boulevard, Suite 304
Thousand Oaks, California 91360 - 7734
Phone: 805.390.9242 Fax: 805.494.0418 O.S.G. #21610

STAMPS/SEALS

REGISTERED PROFESSIONAL ENGINEER
RAHALL A. LAMBERT
No. 5430
Exp. 06/30/2024
STRUCTURAL
STATE OF CALIFORNIA
12/22/2023

LICENSED ARCHITECT
JEAN ANN AMADOR
C-22205
APRIL 30, 2025
DATE
STATE OF CALIFORNIA

SHEET TITLE:

ROOF FRAMING PLAN

PROJECT NO: 21-MPC-040	PROJECT ARCH:
DRAWN: EN	CHECKED: WL
SHEET NUMBER: S110	
DATE: 12/22/23	SHEET: ___ OF ___

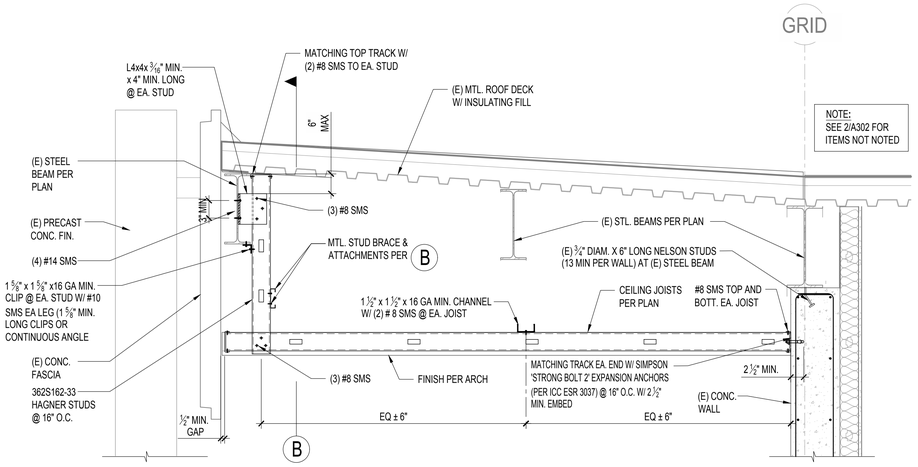

SECTION A

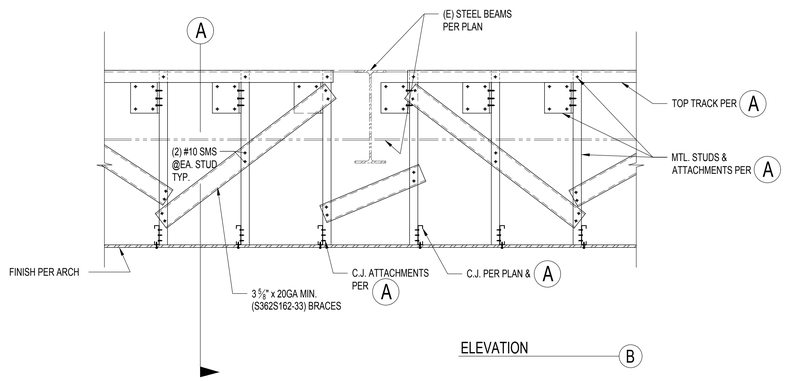

ELEVATION B

FRAMING CONNECTIONS

SCALE: 1"=1'-0" | 8

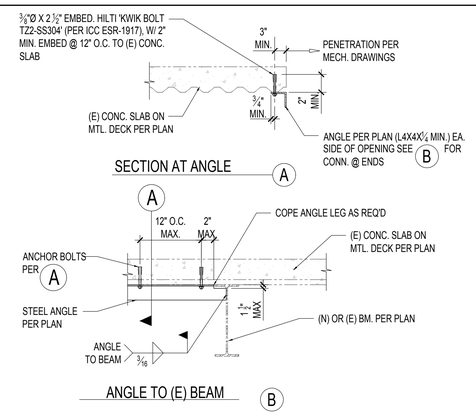

SECTION AT ANGLE A

ANGLE TO (E) BEAM B

FRAMING AT OPENING IN (E) ROOF

SCALE: N.T.S. | 4

ALLOWABLE POINT LOAD SCHEDULE					
ID #	DEAD LOAD (LBS)	SEISMIC HORIZONTAL (LBS)	WIND LOAD HORIZONTAL (LBS)	SEISMIC VERTICAL (LBS)	WIND LOAD VERTICAL (LBS)
1	870	2100	350	2200	760
2	870	2100	350	2200	760
3	870	2100	350	2200	760
4	870	2100	350	2200	760
5	1300	2100	350	2200	760
6	1300	2100	350	2200	760

NOTE: SEE PLAN VIEW AT B FOR POINT LOAD LOCATIONS

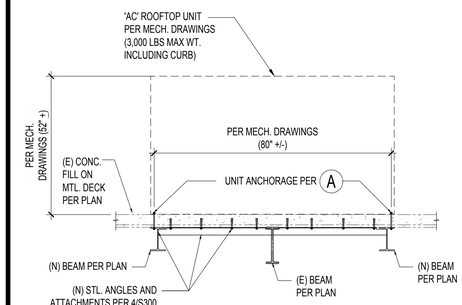

ELEVATION C
NTS

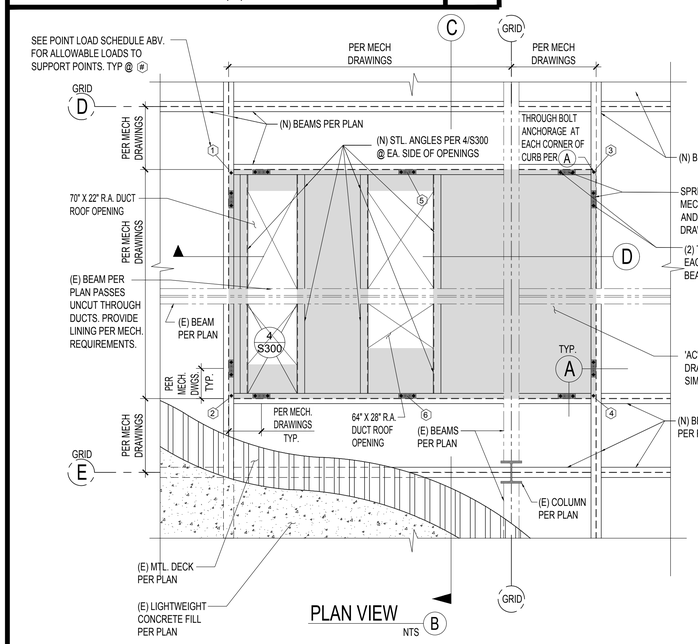

PLAN VIEW B
NTS

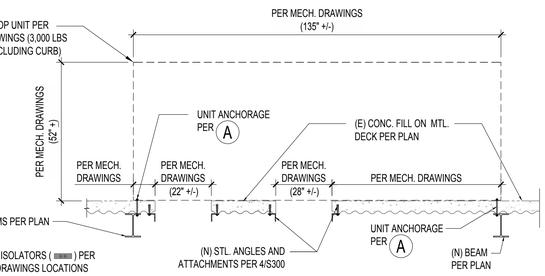

ELEVATION D
NTS

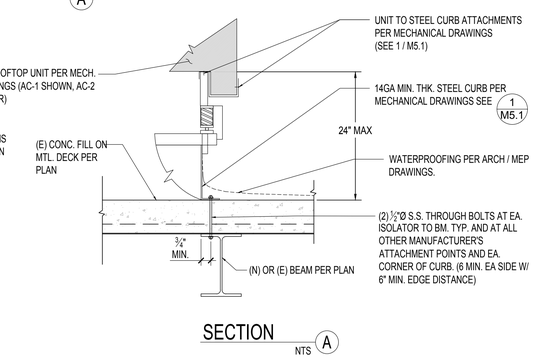

SECTION A
NTS

ROOFTOP AC UNITS ON CURB ANCHORAGE

SCALE: N.T.S. | 2

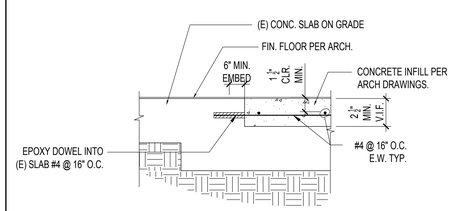

SLAB INFILL AT DEPRESSED FLOOR

NTS | 12

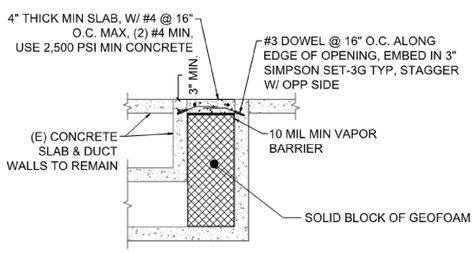

AT (E) PLENUM

FLOOR SLAB INFILL

SCALE: 1"=1'-0" | 9

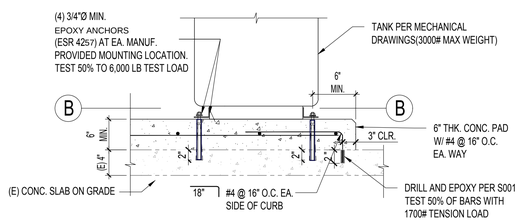

SECTION VIEW A

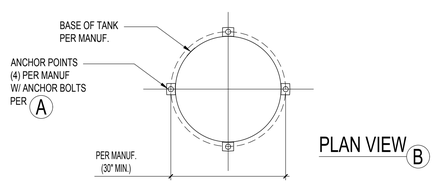

PLAN VIEW B

TANK ON CONCRETE CURB ANCHORAGE

SCALE: N.T.S. | 6

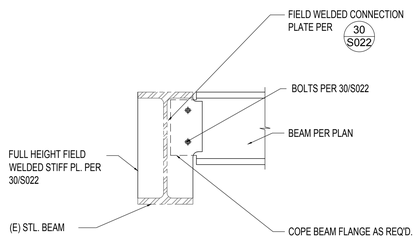

NOTE:
SEE 30/S022 FOR ITEMS NOT NOTED

(N) STEEL BEAM TO (E) STEEL BEAM CONNECTION

SCALE: N.T.S. | 3

DIVISION OF THE STATE ARCHITECT

IDENTIFICATION STAMP
DIV. OF THE STATE ARCHITECT
APP: 03-123218 INC:
REVIEWED FOR
SS ☑ FLS ☑ ACS ☑
DATE: 07/11/2024

MOORPARK COLLEGE

7075 CAMPUS RD
MOORPARK, CA 93021
TEL: (805) 378 - 1400

PROJECT TITLE AND SCHOOL LOCATION

ADMINISTRATION BUILDING RENOVATION

7075 CAMPUS ROAD
MOORPARK, CA 91320

COMMISSIONED ARCHITECT

AMADOR

amador whitte architects, inc.
28328 AGOURA RD, 203 | AGOURA HILLS CA, 91301 | 805-558-4324

CONSULTANT

Orion Structural

Orion Structural Group, Inc.
220 East Thousand Oaks Boulevard, Suite 304
Thousand Oaks, California 91360 - 7734
Phone: 805.390.9242 Fax: 805.494.0418 O.S.G. #21610

STAMPS/SEALS

REGISTERED PROFESSIONAL ENGINEER
WILL A. LAMBERT
No. 5430
Exp. 06/30/2024
STRUCTURAL
STATE OF CALIFORNIA

12/22/2023

LICENSED ARCHITECT
JEAN ANN AMADOR
C-22205
APRIL 30, 2025
DATE
STATE OF CALIFORNIA

SHEET TITLE:

STRUCTURAL DETAILS

PROJECT NO: 21-MPC-040 | PROJECT ARCH:
DRAWN: EN | CHECKED: WL
SHEET NUMBER:

S300

DATE: 12/22/23 | SHEET: ___ OF ___

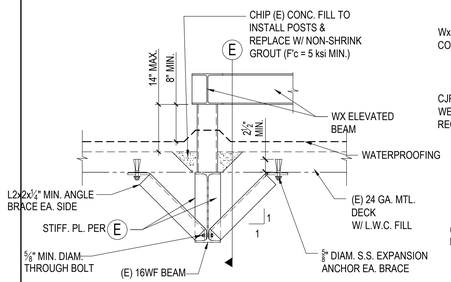

POST ATTACHMENT D

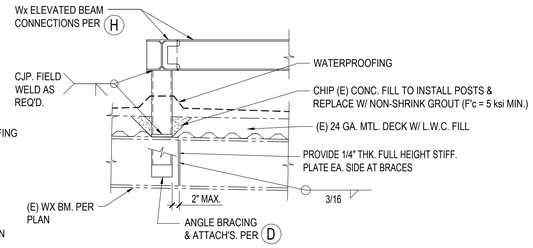

POST ATTACHMENT E

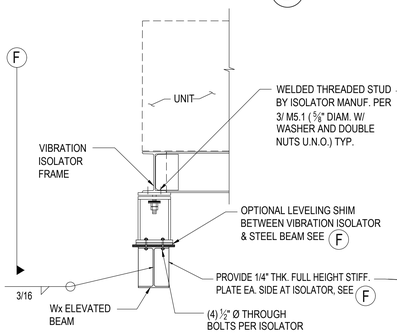

ISOLATOR ATTACHMENT G

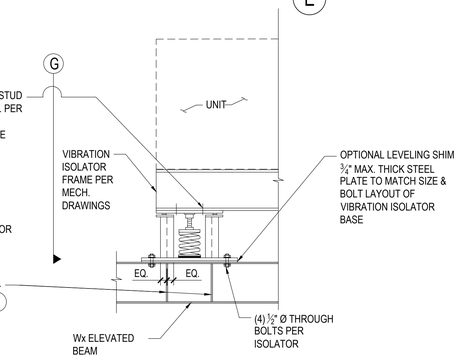

ISOLATOR ATTACHMENT F

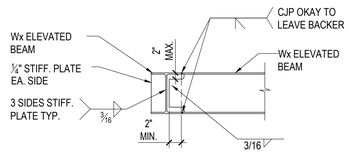

ELEVATED BEAM TO ELEVATED BEAM CONNECTION H

NOTE

- ALL EXPOSED STEEL (INCLUDING FASTENERS, WASHERS, AND SPACERS) SHALL BE HOT-DIPPED GALVANIZED. GALVANIZE PAINT ANY FIELD WELDS, CUTS, OR HOLES.
- PROVIDE SHOP DRAWINGS FOR EACH FRAME AFTER FIELD SURVEY OF ROOF ELEVATIONS & FINAL UNIT VIBRATION ISOLATOR DIMENSIONS

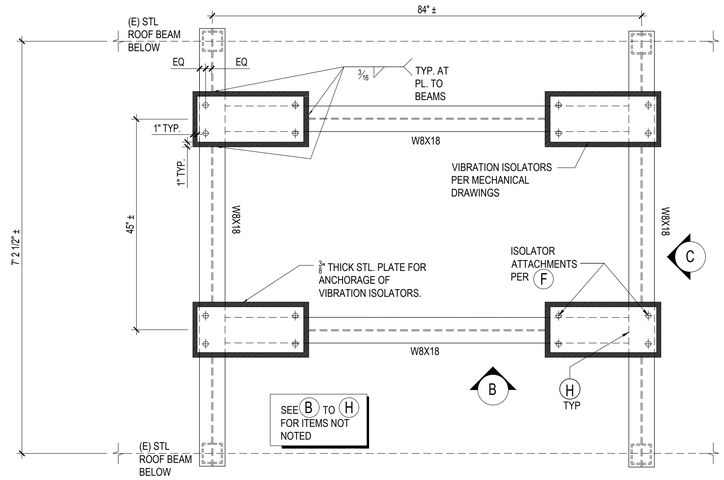

ELEVATED FRAME PLAN VIEW A

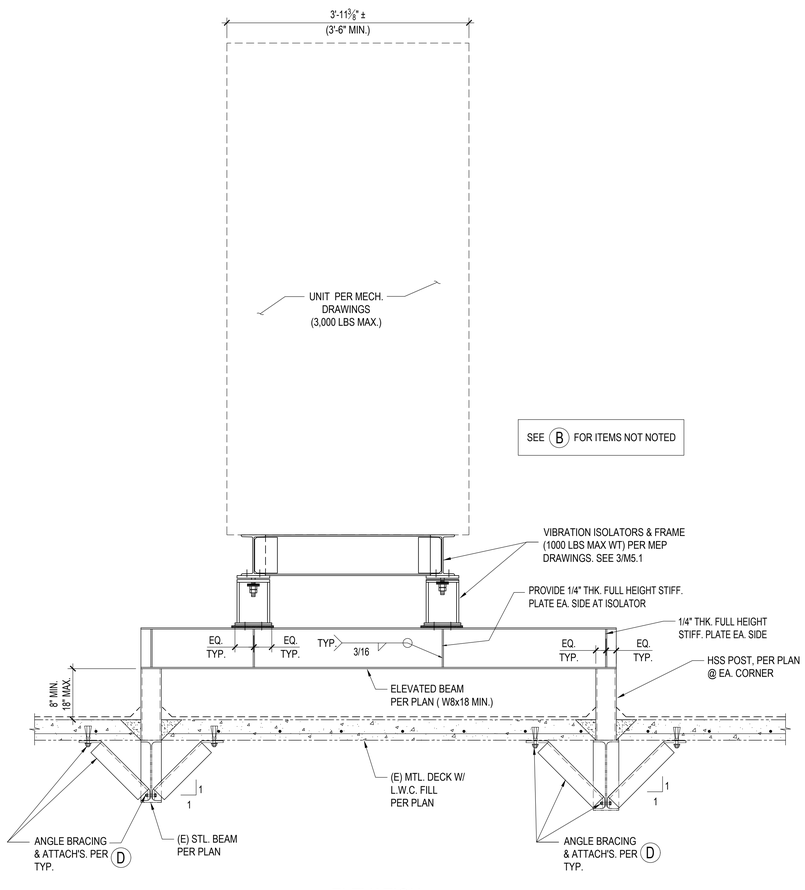

ELEVATION C

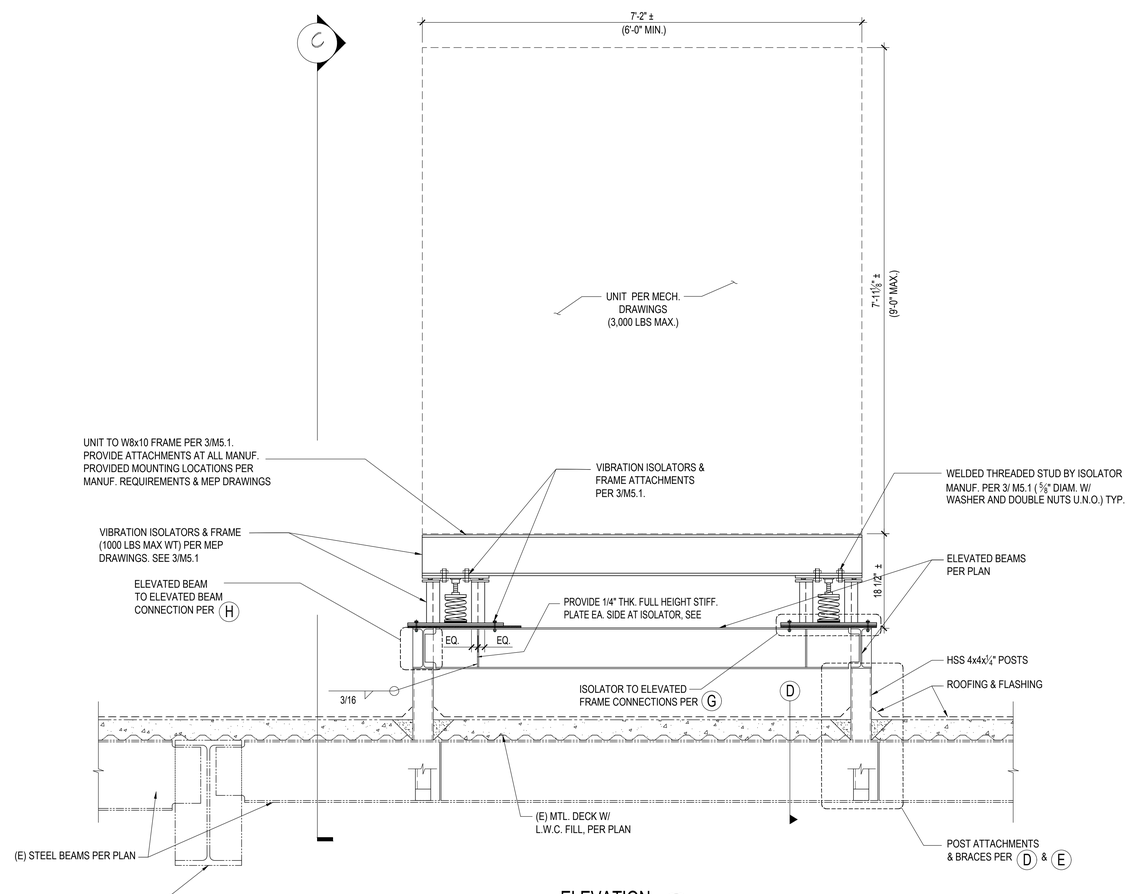

ELEVATION B

HP-1 ELEVATED FRAME ANCHORAGE

SCALE: N.T.S.

DIVISION OF THE STATE ARCHITECT

IDENTIFICATION STAMP
DIV. OF THE STATE ARCHITECT
APP: 03-123218 INC:
REVIEWED FOR
SS ☑ FLS ☑ ACS ☑
DATE: 07/11/2024

MOORPARK COLLEGE

7075 CAMPUS RD
MOORPARK, CA 93021
TEL: (805) 378 - 1400

PROJECT TITLE AND SCHOOL LOCATION

ADMINISTRATION BUILDING RENOVATION

7075 CAMPUS ROAD
MOORPARK, CA 91320

COMMISSIONED ARCHITECT

AMADOR

amador whitte architects, inc.
28328 AGOURA RD, 203 | AGOURA HILLS CA, 91301 | 805-558-4334

CONSULTANT

Orion Structural

Orion Structural Group, Inc.
229 East Thousand Oaks Boulevard, Suite 304
Thousand Oaks, California 91360 - 7734
Phone: 805.390.9242 Fax: 805.494.0418 O.S.G. #21600

STAMPS/SEALS

REGISTERED PROFESSIONAL ENGINEER
WILL A. LAMBERT
No. 5430
Exp. 06/30/2024
STRUCTURAL
STATE OF CALIFORNIA

12/22/2023

LICENSED ARCHITECT
BEAU ANN AMADOR
C-22205
APRIL 30, 2025
DATE
STATE OF CALIFORNIA

SHEET TITLE:

STRUCTURAL DETAILS

PROJECT NO: 21-MPC-040	PROJECT ARCH:
DRAWN: EN	CHECKED: WL
SHEET NUMBER: S301	
DATE: 12/22/23	SHEET: ___ OF ___

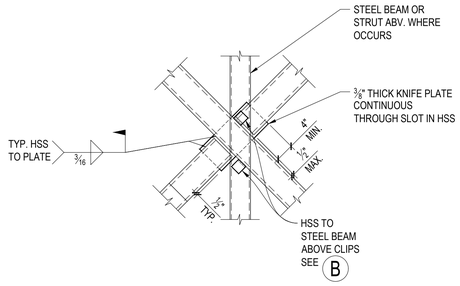

PLAN VIEW @ BRACE TO BRACE INTERSECTION (A)

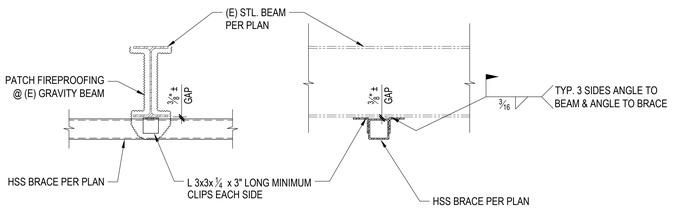

BRACE TO (E) BEAM (B)

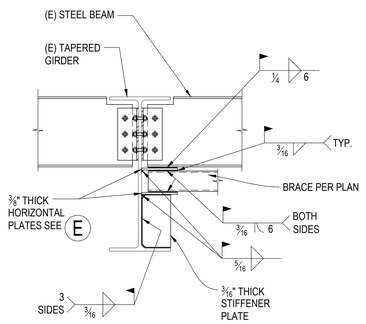

DIAPHRAGM TO BRACE (D)

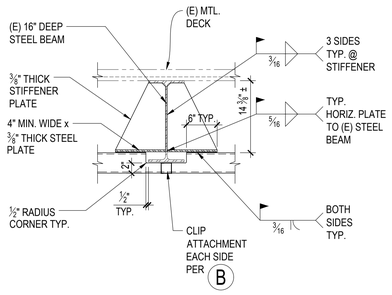

DIAPHRAGM BRACE TO (E) 16" BEAM (C)

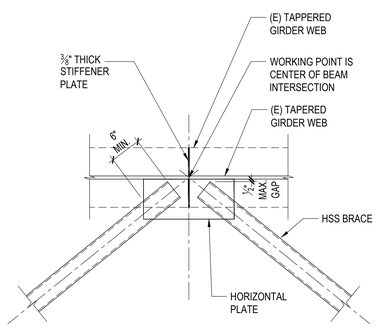

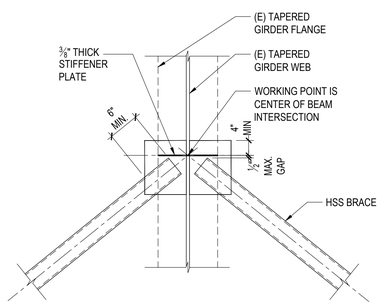

HORIZONTAL CONNECTOR PLATE GEOMETRY (E)

HSS BRACE CONNECTIONS (FOR DIAPHRAGM STRENGTHENING) | 9

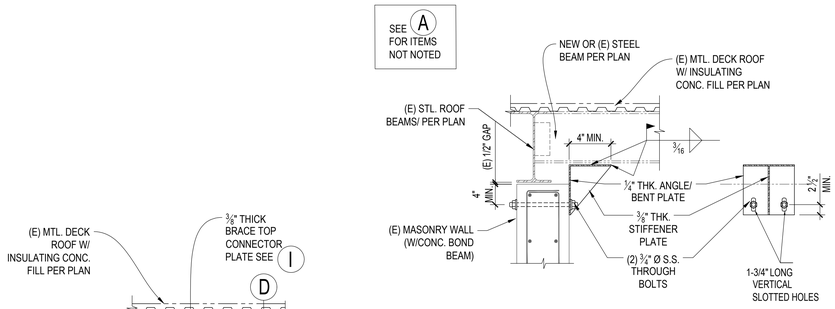

BEAM TO WALL CLIP W/ (E) GAP (B)

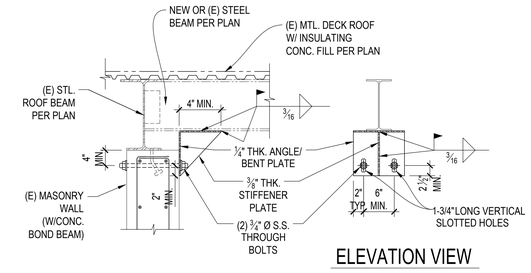

ELEVATION VIEW

BEAM TO WALL CLIP (A)

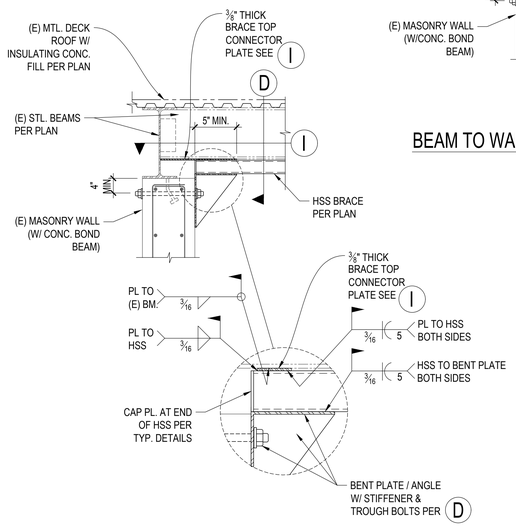

SECTION AT BRACE TO WALL (C)

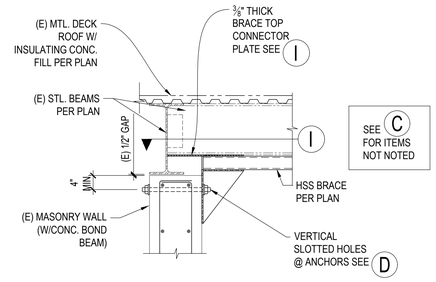

SEE C FOR ITEMS NOT NOTED

BRACE TO WALL W/ (E) GAP (E)

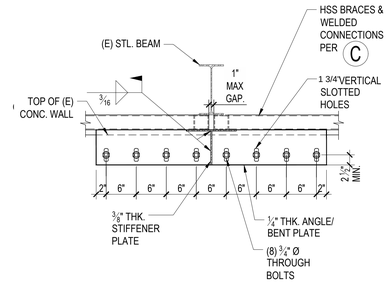

ELEVATION AT BRACE TO WALL (D)

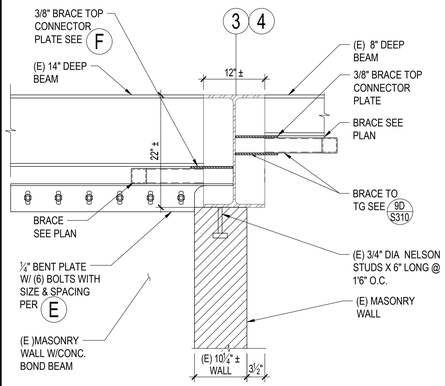

BRACE TO INTERIOR WALL CORNER (H)

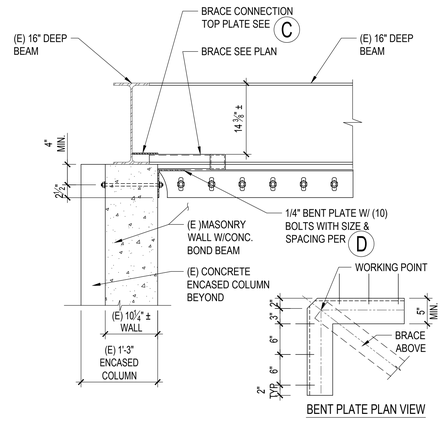

BRACE TO WALL CORNER (G)

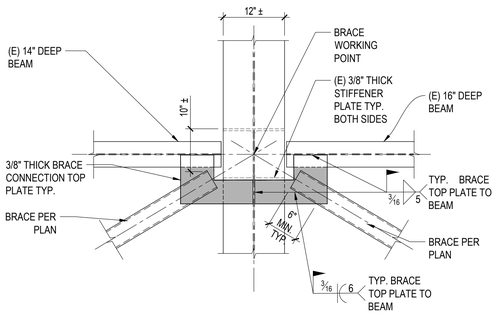

PLAN VIEW @ BRACE TO TAPERED GIRDER @ COLUMN (F)

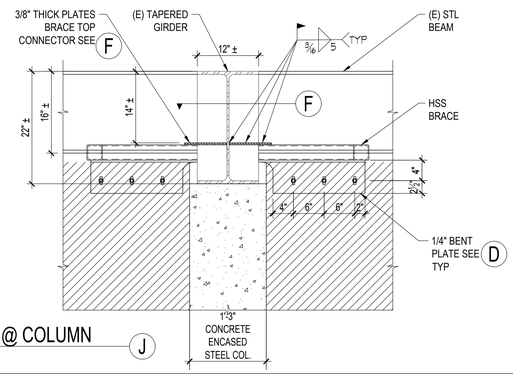

BRACE TO WALL @ COLUMN (J)

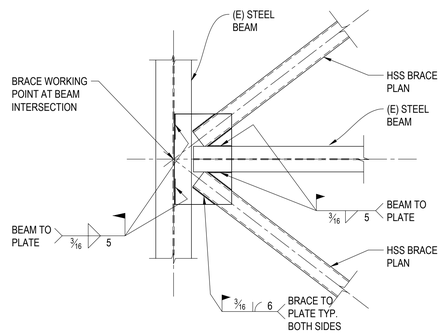

BRACE TO CONNECTOR PLATE (I)

DIAPHRAGM TO WALL CONNECTION STRENGTHENING | NTS | 3

DIVISION OF THE STATE ARCHITECT

IDENTIFICATION STAMP
DIV. OF THE STATE ARCHITECT
APP: 03-123218 INC:
REVIEWED FOR
SS ☑ FLS ☑ ACS ☑
DATE: 07/11/2024

MOORPARK COLLEGE

7075 CAMPUS RD
MOORPARK, CA 93021
TEL: (805) 378 - 1400

PROJECT TITLE AND SCHOOL LOCATION

ADMINISTRATION BUILDING RENOVATION

7075 CAMPUS ROAD
MOORPARK, CA 91320

COMMISSIONED ARCHITECT

AMADOR

amador whittle architects, inc.
28328 AGOURA RD, 203 | AGOURA HILLS CA, 91301 | 805-558-4334

CONSULTANT

Orion Structural

Orion Structural Group, Inc.
221 East Thousand Oaks Boulevard, Suite 304
Thousand Oaks, California 91360 - 7734
Phone: 805.390.9242 Fax: 805.494.0148 O.S.G. #21610

STAMPS/SEALS

REGISTERED PROFESSIONAL ENGINEER
WILL A. LAMBERT
No. 5430
Exp. 06/30/2024
STRUCTURAL
STATE OF CALIFORNIA
12/22/2023

LICENSED ARCHITECT
JEAN ANN AMADOR
C-22205
APRIL 30, 2025
DATE
STATE OF CALIFORNIA

SHEET TITLE:

STRUCTURAL DETAILS

PROJECT NO.: 21-MPC-040
PROJECT ARCH:
DRAWN: EN
CHECKED: WL
SHEET NUMBER:

S310

DATE: 12/22/23
SHEET: ___ OF ___

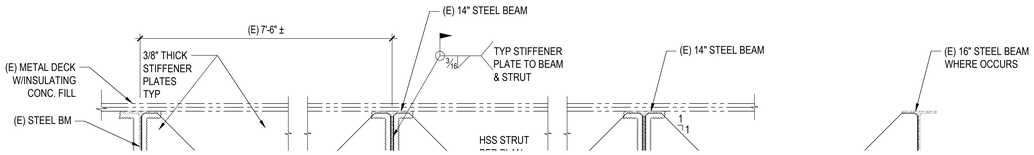

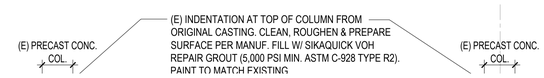

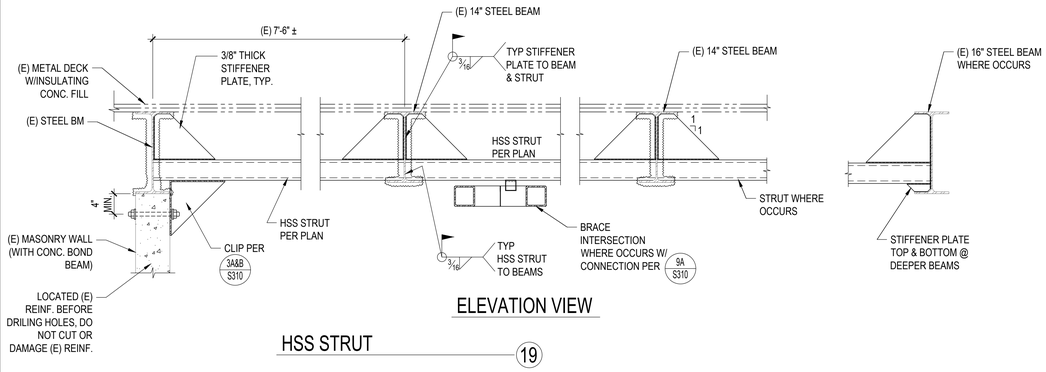

ELEVATION VIEW

HSS STRUT (19)

HSS STRUT 1" = 1'-0" 19

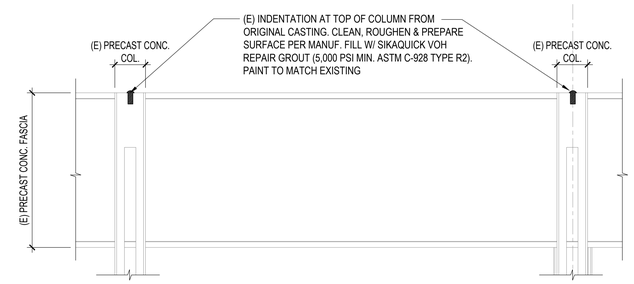

COLUMN CAP FILL (A)

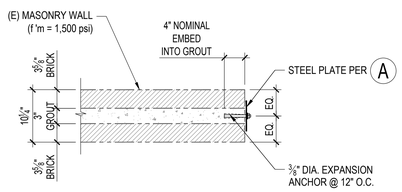

SECTION VIEW @ SIDES (B)

EXPANSION ANCHORS SHALL BE SIMPSON STRONG BOLT 2 ICC ESR-3037 CONCRETE & IAPMO ER-240 MASONRY GROUT TEST 50% TO INSTALLATION TORQUE (30 FT-LB IN CONC. & 20 FT-LB IN MASONRY GROUT)

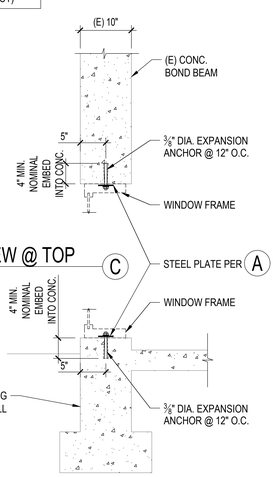

SECTION VIEW @ TOP (C)

SECTION VIEW @ BASE (D)

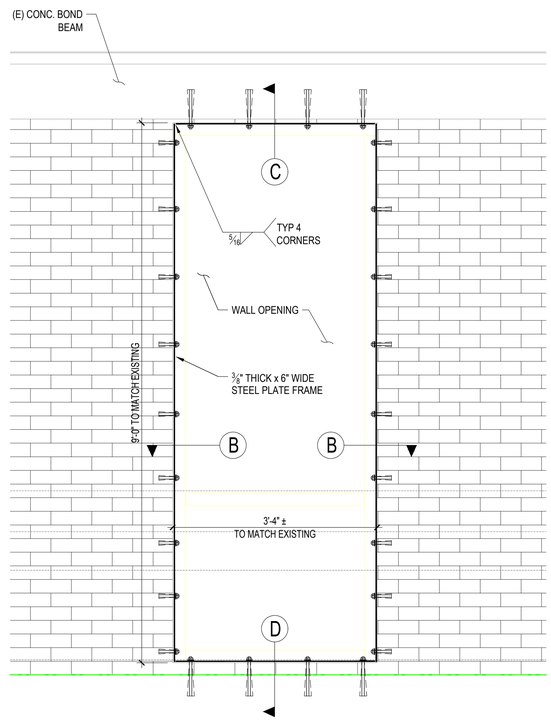

ELEVATION VIEW (A)

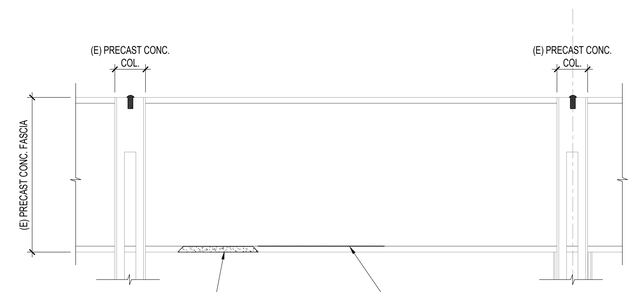

1. CHIP OR CUT EDGES OF SPALLED AREA TO PROVIDE 3/4" DEEP VERTICAL EDGE AROUND PERIMETER TO AVOID "FEATHERED" EDGES.
2. ROUGHEN REPAIR SURFACE AND REMOVE ALL LOOSE CONCRETE.
3. MECHANICALLY CLEAN CONCRETE SURFACE AND STEEL REINFORCING TO REMOVE ALL CORROSION, CONTAMINANTS, AND OTHER BOND-INHIBITING MATTER.
4. INSURE PATCH AREA CONCRETE SURFACE IS SURFACE DRY. (SSD) CONDITION. APPLY SIKA ARMATEC 1C CORROSION INHIBITING BONDING AGENT TO CONCRETE SURFACE AND REINFORCING STEEL.
5. FILL REPAIR WITH SIKA VOH REAPIR GROUT (5,000 PSI MIN. ASTM C-928 TYPE R2) REPAIR MORTAR PER MANUFACTURERS RECOMMENDATIONS.
6. PAINT TO MATCH EXISTING.

SPALLING FILL (B)

1. IDENTIFY THE CRACK EXTENTS FOR REPAIR USING A CRACK GAUGE CARD. PORTIONS OF THE CRACK WITH A WIDTH OF 0.005" (0.13MM) OR LARGER SHALL BE FILLED WITH EPOXY.
2. CLEAN THESE CRACKS OF LOOSE MATERIAL AND DEBRIS WITH WIRE BRUSH AND PRESSURE WASH.
3. FILL THE CRACKS WITH SIKADUR CRACK REPAIR EPOXY PER MANUFACTURER'S INSTRUCTIONS. THESE INCLUDE SURFACE MOUNTED INJECTION PORTS AT 1/2 MAX. CRACKING WITH TEMPORARY SEALANT

CRACK FILL (C)

DIVISION OF THE STATE ARCHITECT

IDENTIFICATION STAMP
DIV. OF THE STATE ARCHITECT
APP: 03-123218 INC:
REVIEWED FOR
SS ☑ FLS ☑ ACS ☑
DATE: 07/11/2024

MOORPARK COLLEGE

7075 CAMPUS RD
MOORPARK, CA 93021
TEL: (805) 378 - 1400

TLE AND SCHOOL LOCATION

NISTRATION BUILDING
VATION

MPUS ROAD
ARK, CA 91320

NED ARCHITECT

AMADOR

amador whitte architects, inc.
28328 AGOURA RD, 203 | AGOURA HILLS CA, 91301| 805-558-4334

NT

rion Structural

ctural Group, Inc.
housand Oaks Boulevard, Suite 304
Oaks, California 91360 - 7734
5.390.9242 Fax: 805.494.0418 O.S.G. #21660

ALS

REGISTERED PROFESSIONAL ENGINEER
WILL A. LAMBERT
No. 5430
Exp. 06/30/2024
STRUCTURAL
STATE OF CALIFORNIA

12/22/2023

LICENSED ARCHITECT
JEFF ANN AMADOR
C-22205
APRIL 30, 2025
DATE
STATE OF CALIFORNIA

E:

STRUCTURAL DETAILS

21-MPC-040 | PROJECT ARCH: | CHECKED: WL

R:

S311

2/22/23 | SHEET: ___ OF ___

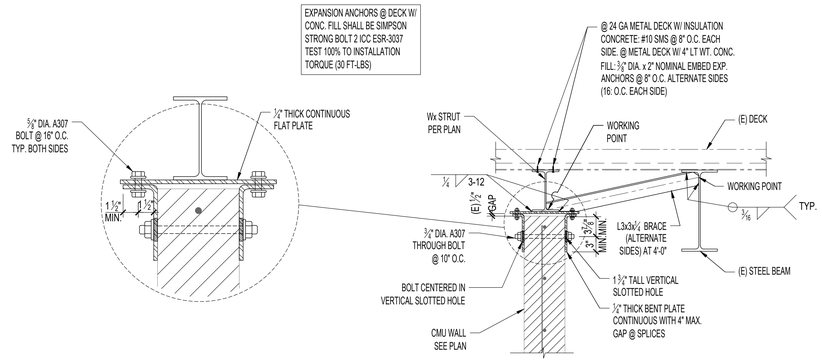

CMU WALL TO STRUT (A)

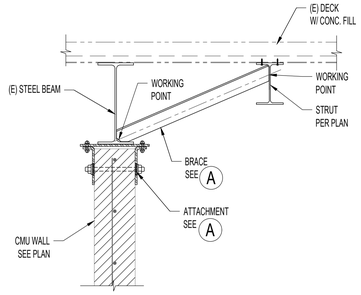

CMU WALL TO (E) STEEL BEAM (B)

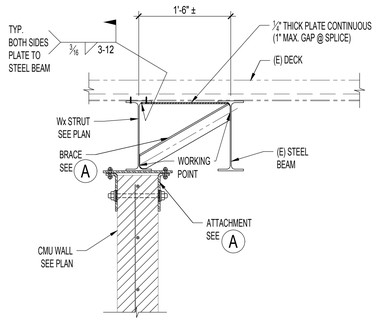

CMU WALL TO STRUT WITH DRAG TRANSFER (C)

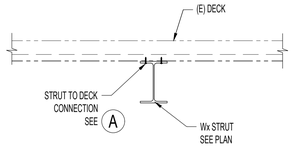

Wx STRUT TO DECK (D)

SCALE: 1"=1'-0" | 34

SCALE: 1"=1'-0" | 31

SCALE: 1"=1'-0" | 35

SCALE: 1"=1'-0" | 32

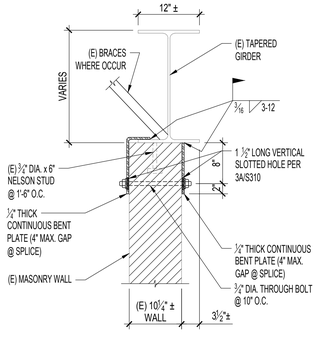

NTS | 36

ADDED ANCHORS AT (E) BEAM TO (E) MASONRY WALL SCALE: 1"=1'-0" | 33

STRUTS ABOVE CMU WALLS SCALE: N.T.S. | 27

DIVISION OF THE STATE ARCHITECT

IDENTIFICATION STAMP
DIV. OF THE STATE ARCHITECT
APP: 03-123218 INC:
REVIEWED FOR
SS ☑ FLS ☑ ACS ☑
DATE: 07/11/2024

MOORPARK COLLEGE

7075 CAMPUS RD
MOORPARK, CA 93021
TEL: (805) 378 - 1400

PROJECT TITLE AND SCHOOL LOCATION

ADMINISTRATION BUILDING RENOVATION

7075 CAMPUS ROAD
MOORPARK, CA 91320

COMMISSIONED ARCHITECT

AMADOR

amador whittle architects, inc.
28328 AGOURA RD. 203 | AGOURA HILLS CA. 91301| 805-558-4334

CONSULTANT

Orion Structural

Orion Structural Group, Inc.
221 East Thousand Oaks Boulevard, Suite 304
Thousand Oaks, California 91360 - 7734
Phone: 805.390.9242 Fax: 805.494.0418 O.S.G. #21600

STAMPS/SEALS

REGISTERED PROFESSIONAL ENGINEER
WILL A. LAMBERT
No. 5430
Exp. 06/30/2024
STRUCTURAL
STATE OF CALIFORNIA

12/22/2023

LICENSED ARCHITECT
BEAT ANN AMADOR
C-22205
APRIL 30, 2025
DATE
STATE OF CALIFORNIA

SHEET TITLE:

STRUCTURAL DETAILS

PROJECT NO.: 21-MPC-040 | PROJECT ARCH:
DRAWN: EN | CHECKED: WL
SHEET NUMBER:

S312

DATE: 12/22/23 | SHEET: ___ OF ___

EPOXY DOWEL TESTING:
- NO TEST AT SLAB DOWELS
- TEST 100% OF FOOTING DOWELS TO 5,350 LBS

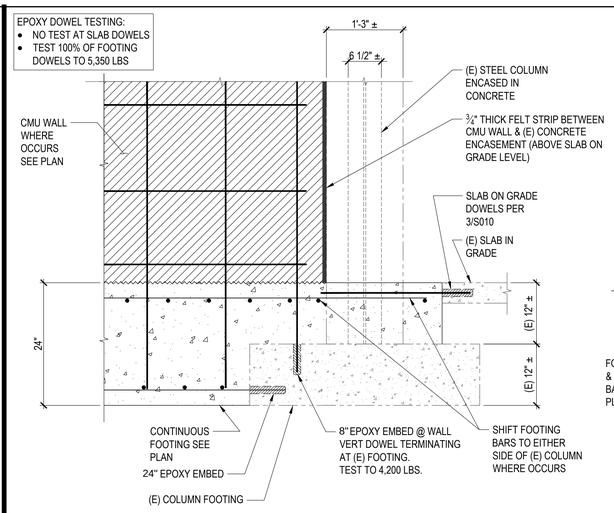

DETAIL AT (E) FOOTING (B)

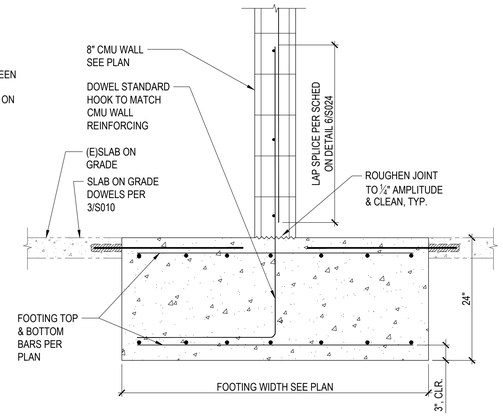

SECTION VIEW (A)

CMU WALL TO FOOTING — SCALE: 1"=1'-0" — 1

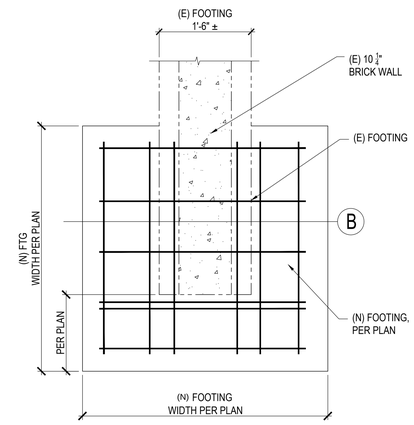

(N) PAD FOOTING PLAN AT END OF (E) WALL (A)

EPOXY DOWEL TESTING:
- NO TEST AT SLAB DOWELS
- TEST 100% OF FOOTING DOWELS TO 5,350 LBS

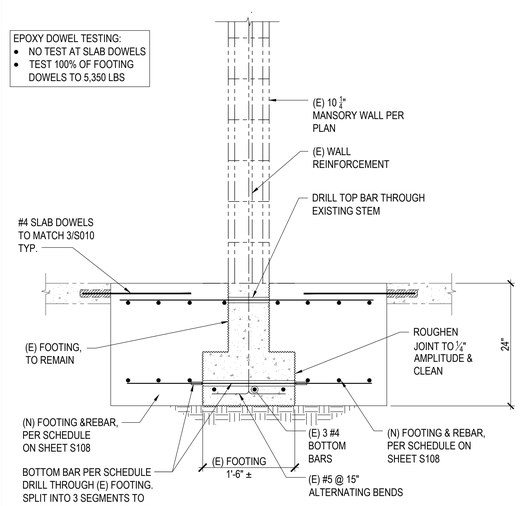

(N) PAD FOOTING DETAIL AT END OF (E) WALL (B)

SCALE: 1"=1'-0" — 9 — - — SCALE: 1"=1'-0" — 6 — (N) PAD FTG DETAIL AT END OF (E) WALL — SCALE: 1"=1'-0" — 3

DIVISION OF THE STATE ARCHITECT

IDENTIFICATION STAMP
DIV. OF THE STATE ARCHITECT
APP: 03-123218 INC:
REVIEWED FOR
SS ☑ FLS ☑ ACS ☑
DATE: 07/11/2024

MOORPARK COLLEGE

7075 CAMPUS RD
MOORPARK, CA 93021
TEL: (805) 378 - 1400

PROJECT TITLE AND SCHOOL LOCATION

ADMINISTRATION BUILDING RENOVATION

7075 CAMPUS ROAD
MOORPARK, CA 91320

COMMISSIONED ARCHITECT

AMADOR

amador whittle architects, inc.
28328 AGOURA RD, 203 | AGOURA HILLS CA, 91301| 805-558-4324

CONSULTANT

Orion Structural

Orion Structural Group, Inc.
221 East Thousand Oaks Boulevard, Suite 304
Thousand Oaks, California 91360 - 7734
Phone: 805.390.9242 Fax: 805.494.0418 O.S.G. #21600

STAMPS/SEALS

REGISTERED PROFESSIONAL ENGINEER
WILL A. LAMBERT
No. 5430
Exp. 06/30/2024
STRUCTURAL
STATE OF CALIFORNIA

12/22/2023

LICENSED ARCHITECT
JEAN ANN AMADOR
C-22205
APRIL 30, 2025
DATE
STATE OF CALIFORNIA

SHEET TITLE:

STRUCTURAL DETAILS

PROJECT NO: 21-MPC-040 | PROJECT ARCH:
DRAWN: EN | CHECKED: WL
SHEET NUMBER:

S320

DATE: 12/22/23 | SHEET: ___ OF ___

MECHANICAL NOTES

1. SCOPE OF WORK: WORK INCLUDES THE FOLLOWING: FURNISH AND INSTALL ALL EQUIPMENT AND CONTROLS SHOWN ON THE ARCHITECTURAL, MECHANICAL, AND PLUMBING DRAWINGS AND DESCRIBED IN THESE NOTES, THE BOOK SPECIFICATIONS AND THE CONTRACT DOCUMENTS. WORK INCLUDES BUT IS NOT LIMITED TO: DEMOLITION OF MULTIPLE AIR HANDLERS, BOILERS, AND ONE CONDENSING UNIT, DUCTING, PIPING, VAV BOXES, AND CONTROLS. INSTALLATION OF NEW ROOFTOP PACKAGE UNITS, SPLIT SYSTEM UNITS, HEATPUMP WATER HEATER, EXHAUST FANS, PUMPS, TANK, DUCTING, PIPING, AND CONTROLS, AND STARTUP AND COMMISSIONING OF REPLACED MECHANICAL AND CONTROL SYSTEMS AS DESCRIBED IN THE CONTRACT DOCUMENTS. INCLUDED ARE ALL DEVICES NEEDED TO MAKE COMPLETE AND FUNCTIONAL SPACE CONDITIONING SYSTEMS AND CONTROLS. CONTRACTOR SHALL FURNISH AND INSTALL, MAKE OPERABLE, AND TEST ALL SYSTEMS AND MECHANICAL EQUIPMENT SHOWN ON THE PLANS AND DESCRIBED IN THE SPECIFICATIONS AND CONTRACT DOCUMENTS. IN CONNECTION THEREWITH, CONTRACTOR SHALL ALSO FURNISH AND INSTALL ALL NECESSARY DEVICES, HARDWARE, AND SYSTEMS REQUIRED TO MAKE SAID EQUIPMENT PROPERLY AND SAFELY OPERABLE, INCLUDING BUT NOT LIMITED TO, BLOCKING, MOUNTING HARDWARE, INSULATION, FILTERS, VIBRATION CONTROL DEVICES, DUCT SYSTEMS, CONTROL SYSTEMS, AND PATCHING AND PAINTING.

2. INTERPRETATION OF DRAWINGS, SPECIFICATIONS OR CONTRACT DOCUMENTS. IF ANY BIDDER IS IN DOUBT AS TO THE TRUE MEANING OF ANY PART OF THE DRAWINGS, THE SPECIFICATIONS OR OTHER PORTIONS OF THE CONTRACT DOCUMENTS; FINDS DISCREPANCIES, ERRORS OR OMISSIONS THEREIN; OR FINDS VARIANCES IN ANY OF THE CONTRACT DOCUMENTS WITH APPLICABLE RULES, REGULATIONS, ORDINANCES AND/OR LAWS, A WRITTEN REQUEST FOR AN INTERPRETATION OR CORRECTION THEREOF MAY BE SUBMITTED TO THE ENGINEER. IT IS THE SOLE AND EXCLUSIVE RESPONSIBILITY OF THE BIDDER TO SUBMIT SUCH REQUEST IN SUFFICIENT TIME FOR THE PREPARATION OF A RESPONSE THERETO AND DELIVERY OF SUCH RESPONSE TO ALL BIDDERS PRIOR TO THE SCHEDULED CLOSING FOR RECEIPT OF BID PROPOSALS. ANY REQUEST OF ANY BIDDER, PURSUANT TO THE FOREGOING SENTENCE THAT IS MADE LESS THAN SEVEN DAYS PRIOR TO THE SCHEDULED CLOSING DATE FOR THE RECEIPT OF BID PROPOSALS SHALL BE DEEMED UNTIMELY. ANY INTERPRETATION OR CORRECTION OF THE CONTRACT DOCUMENTS WILL BE MADE ONLY BY WRITTEN ADDENDUM DULY ISSUED BY THE OWNER OR THE ENGINEER. A COPY OF ANY SUCH ADDENDUM WILL BE MAILED OR OTHERWISE DELIVERED TO EACH BIDDER RECEIVING A SET OF THE CONTRACT DOCUMENTS. NO PERSON IS AUTHORIZED TO RENDER AN ORAL INTERPRETATION OR CORRECTION OF ANY PORTION OF THE CONTRACT DOCUMENTS TO ANY BIDDER, AND NO BIDDER IS AUTHORIZED TO RELY ON ANY SUCH ORAL INTERPRETATION OR CORRECTION. FAILURE TO REQUEST INTERPRETATION OR CLARIFICATION OF THE DRAWINGS, THE SPECIFICATIONS OR OTHER PORTIONS OF THE CONTRACT DOCUMENTS PURSUANT TO THE FOREGOING SHALL BE DEEMED TO BE A WAIVER OF ANY DISCREPANCY, DEFECT, OR CONFLICT THEREIN.

3. DIMENSIONS. ALL DIMENSIONS SHALL HAVE PREFERENCE OVER SCALE. ALL DIMENSIONS SHALL BE VERIFIED IN THE FIELD, ENGINEER SHALL BE NOTIFIED OF ANY DISCREPANCIES BETWEEN ARCHITECTURAL AND ENGINEERING DRAWINGS BEFORE PROCEEDING WITH WORK. IN NO CASE SHALL WORKING DIMENSIONS BE SCALED FROM PLANS, SECTIONS, OR DETAILS ON WORKING DRAWINGS. ALL SIZES OF EQUIPMENT AND MATERIALS SHALL BE VERIFIED WITH EQUIPMENT MANUFACTURER.

4. CODES AND STANDARDS: ALL WORK SHALL COMPLY WITH ALL APPLICABLE REQUIREMENTS OF THE OCCUPATIONAL SAFETY AND HEALTH ACT (OSHA), 2022 CALIFORNIA BUILDING CODE, THE 2022 CALIFORNIA MECHANICAL CODE, THE 2022 CALIFORNIA PLUMBING CODE, THE NATIONAL ELECTRIC CODE, THE STATE OF CALIFORNIA, EQUIPMENT MANUFACTURER'S RECOMMENDED PROCEDURES, AND STANDARD CONSTRUCTION PRACTICES. NOTE: WHERE TWO OR MORE CODES CONFLICT, THE MOST RESTRICTIVE SHALL APPLY. NOTHING IN THESE PLANS AND SPECIFICATIONS SHALL BE CONSTRUED TO PERMIT WORK NOT CONFORMING TO APPLICABLE CODES.

5. SUBMITTALS REQUIRED: PRIOR TO ORDERING EQUIPMENT AND MATERIALS, CONTRACTOR SHALL FURNISH TO ENGINEER / OWNER SUBMITTALS AND SHOP DRAWINGS OF ALL EQUIPMENT AND MATERIALS PROPOSED FOR USE IN THIS PROJECT. ORDERING OF EQUIPMENT AND MATERIALS SHALL ONLY PROCEED AFTER SATISFACTORY REVIEW OF ALL SUBMITTALS BY CONTRACTOR / ENGINEER / OWNER. COPIES OF ALL OWNER'S MANUALS, WARRANTIES AND OTHER WRITTEN INFORMATION REGARDING SYSTEMS SHALL BE PRESENTED TO OWNER PRIOR TO THE COMPLETION OF THE PROJECT.

6. CONSTRUCTION OBSERVATION: IN ADDITION TO THE REQUIREMENT FOR OBTAINING INSPECTIONS BY THE LOCAL JURISDICTION, CONTRACTOR SHALL NOTIFY ENGINEER AT APPROPRIATE TIMES DURING THE CONSTRUCTION PROCESS SO THAT ENGINEER CAN VISIT SITE TO BECOME GENERALLY FAMILIAR WITH THE PROGRESS AND QUALITY OF CONTRACTOR'S WORK AND TO DETERMINE IF THE WORK IS PROCEEDING IN GENERAL ACCORDANCE WITH THE CONTRACT DOCUMENTS.

7. UNIT LOCATIONS: EQUIPMENT AND SYSTEM LOCATIONS SHOWN ARE APPROXIMATE ONLY. CONTRACTOR SHALL VERIFY LOCATIONS OF ALL STRUCTURAL MEMBERS AND EXISTING CONDITIONS IN THE FIELD, AND LOCATE UNITS AND DUCTWORK TO AVOID INTERFERENCE. ANY SIGNIFICANT DEVIATIONS FROM THE PLANS SHALL BE CALLED TO THE ATTENTION OF THE ENGINEER. ALLOW CLEARANCE FOR DUCTWORK AND PIPING. ALL CLEARANCES REQUIRED BY UNIT MANUFACTURER SHALL BE MAINTAINED. ENTIRE INSTALLATION SHALL BE IN ACCORDANCE WITH CODES AND THE RECOMMENDED INSTALLATION PROCEDURES PUBLISHED BY THE MANUFACTURER.

8. DUCTWORK & PIPING: CONTRACTOR SHALL INSTALL NEW DUCTWORK AND PIPING IN THE APPROXIMATE LOCATIONS SHOWN ON THE DRAWINGS. ALL DUCTWORK & PIPING SHALL BE SECURELY ANCHORED TO THE BUILDING IN AN APPROVED MANNER THAT WILL RENDER IT FREE FROM VIBRATION AND LATERAL MOVEMENT. CONTRACTOR SHALL PROVIDE WITHOUT COST TO THE OWNER ALL REQUIRED TRANSITIONS AND OFFSETS TO AVOID CONFLICTS WITH STRUCTURE AND OTHER TRADES.

9. MATERIALS - DUCTWORK: ALL NEW DUCTWORK FOR HVAC SYSTEMS SHALL BE GALVANIZED STEEL CONFORMING TO ASTM SPEC A525.

RECTANGULAR DUCTWORK SHALL BE MADE FROM GALVANIZED STEEL SHEETS. DUCT CONSTRUCTION, AND REINFORCING SHALL BE PER TABLES 6-1, 6-2, AND 6-3 OF THE CALIFORNIA MECHANICAL CODE. DUCTWORK SHALL BE OF THE FOLLOWING GAUGES: UP TO 12" - 26 GAUGE. 13"-30" - 24 GAUGE. CURVED ELBOWS SHALL HAVE CENTRALIZE RADIUS NOT LESS THAN THE WIDTH OF THE DUCT. WHERE ABRUPT TURNS AND ELBOWS ARE USED, TURNING VANES SHALL BE PROVIDED. TAKE-OFFS FROM MAIN DUCTS SHALL BE MADE WITH 45 DEGREE ANGLES WITH VOLUME DAMPERS WHERE SHOWN. ALL PANELS SHALL BE CROSS BROKEN TO ENSURE RIGIDITY.

ALL BRANCH SUPPLY AND RETURNS SHALL HAVE VOLUME DAMPERS REGARDLESS IF SHOWN OR NOT. INSTALL POTTORFF REMOTE DAMPER OPERATORS AT INACCESSABLE LOCATIONS.

10. DUCT INSULATION: INSULATE ALL DUCTING WITH 2" OF GLASS FIBER INSULATION WITH VAPOR BARRIER, MIN R-VALUE 6.0.

11. BALANCING: FOLLOWING INSTALLATION, CONTRACTOR SHALL START UP AND BALANCE ALL HVAC SYSTEMS TO CONFORM TO AIR VOLUMES INDICATED ON PLANS. ADJUST SUPPLY & RETURN GRILLES AND REGISTERS FOR OPTIMAL AIR DISTRIBUTION. COPIES OF BALANCING RECORDS SHALL BE FURNISHED TO BUILDING OWNER AND PROJECT ENGINEER. UNIT FANS SHALL OPERATE AT CONSTANT SPEED.

12. VIBRATION ISOLATION: INSTALL FLEXIBLE CONNECTIONS BETWEEN MECHANICAL EQUIPMENT AND DUCTWORK. INSTALL NEW VIBRATION ISOLATION AT CHILLER. SEE MECHANICAL DETAILS & SPECIFICATIONS FOR SPECIFIC TYPE.

13. DUCT SUPPORTS AND HANGERS: DUCT SUPPORTS SHALL BE PER THE 2022 CALIFORNIA MECHANICAL CODE. RECTANGULAR DUCTS WITH A MAXIMUM SIZE NOT EXCEEDING 30" AND ALL ROUND DUCTS SHALL BE SUPPORTED WITH ONE INCH WIDE 18 GAUGE HANGER STRAPS. SUPPORTS SHALL BE LOCATED ON TWO OPPOSITE SIDES OF THE DUCT, SHALL BE METAL SCREWED TO THE SIDES AND BOTTOM OF THE DUCT, SHALL BE SPACED AT NOT MORE THAN 7'-8" ON CENTERS AND SHALL BE LATERALLY BRACED. SECURE STRAPS TO STRUCTURAL FRAMING PER SMACNA STDS. FOR SEISMIC LEVEL "A".

14. CLEANUP: EVERY DAY, AND AFTER ALL WORK HAS BEEN COMPLETED, CONTRACTOR SHALL CLEAN ENTIRE JOB-SITE OF ALL DEBRIS ASSOCIATED WITH MECHANICAL SYSTEMS. EXPOSED PARTS WHICH ARE TO BE PAINTED SHALL BE THOROUGHLY CLEANED READY FOR PAINTING.

15. WIRING: ALL WIRING SHALL BE PERFORMED IN ACCORDANCE WITH NEC REQTS. ALL WIRING SHALL BE IN CONDUIT, ALL INTERIOR LOW VOLTAGE AND CONTROL WIRING SHALL BE IN WIREMOLD AND IN FAN ROOMS SHALL BE IN CONDUIT. EXPOSED CONDUIT SHALL BE INSTALLED IN A SQUARE, PLUMB, AND LEVEL MANNER WITH THOUGHT GIVEN TO THE FINAL APPEARANCES. PROVIDE TO ENGINEER SHOP DRAWING FOR CONTROL TRANSFORMER CONFIGURATIONS DETAILING CIRCUITS TO BE USED, LOAD CALCULATIONS, WIRE SIZES, AND LOCATIONS. WORK SHALL BE INSTALLED IN ACCORDANCE WITH THE CURRENT NATIONAL ELECTRICAL CODE AND ELECTRICAL SPECIFICATIONS. ALL TRANSFORMERS SHALL BE PROTECTED BY PROPERLY SIZED CIRCUIT BREAKER OR FUSE(S). ALL TRANSFORMERS SHALL HAVE RESETABLE BREAKER ON THE LOAD SIDE. ALL LOW VOLTAGE CONTROL & COMMUNICATIONS WIRING SHALL BE DONE ACCORDING TO MANUFACTURERS INSTALLATION MANUAL. PROVIDE SUBMITTALS ON WIRE AND ENCLOSURES.

16. COORDINATION DURING CONSTRUCTION: THE CONTRACTOR SHALL COORDINATE ANY NECESSARY CHANGES IN WORK SCHEDULING WITH THE COLLEGE TO MINIMIZE THE DISRUPTION. THE CONTRACTOR SHALL COORDINATE WITH OTHER TRADES. THE CONTRACTOR SHALL REPAIR ANY DAMAGE CAUSED BY HIS WORK TO BUILDING(S) AND EQUIPMENT AT NO ADDITIONAL COST TO THE OWNER.

17. CORRECTION OF WORK: THE CONTRACTOR SHALL PROMPTLY CORRECT ALL WORK THE OWNER FINDS DEFECTIVE OR FAILING TO CONFORM TO THE CONTRACT DOCUMENTS. THE CONTRACTOR SHALL BEAR ALL COSTS REQUIRED BY THE CONTRACT DOCUMENTS, IF ANY OF THE WORK IS FOUND TO BE DEFECTIVE OR NOT IN ACCORDANCE WITH THE CONTRACT DOCUMENTS, THE CONTRACTOR SHALL CORRECT IT PROMPTLY AFTER RECEIPT OF A WRITTEN NOTICE FROM THE OWNER TO DO SO.

18. AS-BUILT DRAWINGS SHALL BE GIVEN TO THE OWNER PRIOR TO ACCEPTANCE OF THE PROJECT. AS-BUILTS SHALL BE ON PRINTED SHEETS AND ON MAGNETIC MEDIA.

19. ALL NEW DUCTING SHALL BE KEPT CLEAN DURING THE CONSTRUCTION PROCESS. DURING AIR BALANCE REVIEW THE DUCTING WILL BE INSPECTED FOR CLEANLINESS. SHOULD DEBRIS AND OR DUCT BE FOUND IN THE DUCT SYSTEMS SHALL BE CLEANED PER NACDA STANDARDS.

20. HYDRONIC WATER PIPING SHALL BE U.S. MANUFACTURED SCHEDULE 40 STEEL PIPE WITH WELDED OR U.S. MANUFACTURED TYPE 'L' COPPER WITH WROT SOLDER TYPE FITTINGS. ALL PIPE SHALL BE COVERED WITH INSULATION PER T-24 STANDARDS. ALL EXTERIOR PIPING SHALL HAVE ALUMINUM JACKET WITH FORMED ALUMINUM ELBOWS.

21. EQUIPMENT AND CONDENSATE DRAINS SHALL TERMINATE AT FLOOR SINK. DRAINS SHALL BE U.S. MANUFACTURED TYPE 'L' COPPER WITH WROT COPPER FITTINGS AND SOLDERED JOINTS. VALVES SHALL BE NIBCO S-585 FULL PORT BALL VALVES. CONDENSATE DRAINS SHALL HAVE CLEAN-OUTS AT CHANGE OF DIRECTION AND SLOPE TO DRAIN. INSULATE COPPER CONDENSATE LINES W/ 1" THICK FIBERGLASS INSULATION WITH FITTING COVERS W/ NO GAPS.

22. AUTOMATED LOGIC CONTROLS ARE THE DISTRICT STANDARD. INTEGRATE NEW CONTROLS WITH EXISTING PROGRAMMING INCLUDING UPDATED GRAPHICS. PROVIDE NEW CONTROLLERS, ROUTER, SENSORS, WIRING, CONDUIT, PROGRAMMING FOR A COMPLETE INTEGRATED CONTROL SYSTEM.

23. CEILING SPACE IS VERY LIMITED AND PROACTIVE COORDINATION IS REQUIRED TO ALLOW FOR PROPER AND COMPLETE INSTALLATION OF ALL MECHANICAL, PLUMBING, FIRE SPRINKLER SYSTEMS, ELECTRICAL, STRUCTURAL AND ARCHITECTURAL SYSTEMS AND EQUIPMENT. PROVIDE ALL OFFSETS AND TRANSITIONS REQUIRED. REVIEW OTHER DISCIPLINES PLANS TO AID IN THIS COORDINATION EFFORT.

24. LABEL ALL ROOFTOP EQUIPMENT WITH EQUIPMENT NUMBER AND SERVICE AREA

25. ALL WORK SHALL BE PERFORMED BY TRAINED AND QUALIFIED WORKERS. THE INSTALLATION SHALL BE EQUAL OR BETTER TO THE STANDARD OF CARE FOR THE RESPECTIVE TRADE. WORK SHALL BE NEAT AND CLEAN.

GENERAL NOTES

1. CUTTING, BORING SAWCUTTING OR DRILLING THROUGH THE NEW OR EXISTING STRUCTURAL ELEMENTS TO BE DONE ONLY WHEN SO DETAILED ON THE DRAWINGS OR ACCEPTED BY THE MECHANICAL AND STRUCTURAL ENGINEER WITH THE APPROVAL OF DSA REPRESENTATIVE.

2. ALL WELDING SHALL BE SPECIALLY INSPECTED BY AN AWS-CWI QUALIFIED INSPECTOR APPROVED BY DSA/ORS.

3. THE PROVISIONS OF CFC & CBC 33 SHALL BE ENFORCED ON THIS PROJECT.

4. RENEW ANY EXISTING STEEL FIREPROOFING AFFECT BY THIS CONSTRUCTION.

5. FIRE CAULK RATED ALL PENETRATIONS OF RATED ELEMENTS (EXCEPT AT FIRE SMOKE DAMPERS)

BUILDING NOTES

1. ALL WORK SHALL CONFORM WITH THE 2022 CALIFORNIA BUILDING CODE, (CBC), THE 2022 INTERNATIONAL BUILDING CODE, (IBC), AND ALL LOCAL ORDINANCES.

2. THE CONTRACTOR SHALL VERIFY ALL DIMENSIONS AND CONDITIONS PRIOR TO STARTING CONSTRUCTION AND BRING TO THE ATTENTION OF THE ENGINEER ANY DISCREPANCIES OR INCONSISTENCIES.

3. NO STRUCTURAL MEMBER SHALL BE CUT, NOTCHED, BORED OR OTHER-WISE WEAKENED EXCEPT AS BY APPROVED BY THE STRUCTURAL ENGINEER.

4. THE ENGINEER SHALL BE NOTIFIED OF ANY UNUSUAL OR UNFORSEEN CONDITION WHICH EFFECTS THE STRUCTURAL STABILITY OF THE BUILDING PRIOR TO CONTINUING WITH CONSTRUCTION. SHOULD ANY CONDITION ARISE WHERE THERE APPEARS TO BE AN ERROR ON THE DRAWINGS OR A DISCREPANCY BETWEEN THE DRAWINGS AND CONDITIONS IN THE FIELD, THE ENGINEER SHALL BE NOTIFIED PRIOR TO CONTINUING WITH THE WORK.

5. IN THE CASE WHERE TWO OR MORE DETAILS APPLYING TO THE SAME PART OF THE WORK ARE IN CONFLICT, THE MOST RESTRICTIVE SHALL GOVERN UNLESS CLARIFIED OR OTHERWISE APPROVED BY THE ENGINEER.

6. REVIEW OF SHOP DRAWINGS MEANS REVIEW OF GENERAL METHOD OF FABRICATION ONLY. DIMENSIONS AND QUANTITIES MAY NOT BE CHECKED, AND REVIEW OF THE SHOP DRAWINGS DOES NOT RELIEVE THE CONTRACTOR FROM COMPLIANCE WITH THE CONSTRUCTION DOCUMENTS UNLESS SPECIFICALLY SO INDICATED IN THE REVIEW.

7. THE ENGINEER HAS NOT BEEN RETAINED FOR SUPERVISION OR INSPECTION DURING CONSTRUCTION, BUT WILL RESOLVE STRUCTURAL ITEMS BROUGHT TO HIS ATTENTION DURING CONSTRUCTION.

8 THE CONTRACTOR SHALL BE RESPONSIBLE FOR ALL SHORING AND BRACING REQUIRED TO PROTECT PERSONNEL AND ADJACENT PROPERTY DURING CONSTRUCTION. THE CONTRACTOR SHALL ADEQUATELY BRACE ELEMENTS OF THE STRUCTURE DURING CONSTRUCTION TO INSURE THE SAFETY OF THE STRUCTURE.

2022 BUILDING ENERGY EFFICIENCY STANDARDS, REQUIREMENTS FOR PIPE INSULATION

Table 120.3-A PIPE INSULATION THICKNESS

Fluid Operating Temperature Range (°F)	Insulation Conductivity: Conductivity (in Btu-in/h-ft²-°F)	Insulation Conductivity: Mean Rating Temperature (°F)		Nominal Pipe Diameter (in inches): < 1	1 to <1.5	1.5 to < 4	4 to < 8	8 and larger
Space heating and Service Water Heating Systems (Steam, Steam Condensate, Refrigerant, Space Heating, Service Hot Water)				Minimum Pipe Insulation Required (Thickness in inches or R-value)				
Above 350	0.32-0.34	250	Inches	4.5	5.0	5.0	5.0	5.0
			R-value	R 37	R 41	R 37	R 27	R 23
251-350	0.29-0.32	200	Inches	3.0	4.0	4.5	4.5	4.5
			R-value	R 24	R 34	R 35	R 26	R 22
201-250	0.27-0.30	150	Inches	2.5	2.5	2.5	3.0	3.0
			R-value	R 21	R 20	R 17.5	R 17	R 14.5
141-200	0.25-0.29	125	Inches	1.5	1.5	2.0	2.0	2.0
			R-value	R 11.5	R 11	R 14	R 11	R 10
105-140	0.22-0.28	100	Inches	1.0	1.5	1.5	1.5	1.5
			R-value	R 7.7	R 12.5	R 11	R 9	R 8
Fluid Operating Temperature Range (°F)	**Insulation Conductivity: Conductivity (in Btu-in/h-ft²-°F)**	**Insulation Conductivity: Mean Rating Temperature (°F)**		**Nominal Pipe Diameter (in inches): < 1**	**1 to <1.5**	**1.5 to < 4**	**4 to < 8**	**8 and larger**
Space cooling systems (chilled water, refrigerant and brine)				Minimum Pipe Insulation Required (Thickness in inches or R-value)[1]				
40-60	0.21-0.27	75	Inches	Nonres 0.5 / Res 0.75	Nonres 0.5 / Res 0.75	1.0	1.0	1.0
			R-value	Nonres R 3 / Res R 6	Nonres R 3 / Res R 5	R 7	R 6	R 5
Below 40	0.20-0.26	50	Inches	1.0	1.5	1.5	1.5	1.5
			R-value	R 8.5	R 14	R 12	R 10	R 9

VAPOR & LIQUID LINES HYDRONIC (TYP)

Footnote to Table 120.3-A:

1. These thickness are based on energy efficiency considerations only. Issues such as water vapor permeability or surface condensation sometimes require vapor retarders or additional insulation.

MEP COMPONENT ANCHORAGE NOTE

ALL MECHANICAL, PLUMBING, AND ELECTRICAL COMPONENTS SHALL BE ANCHORED AND INSTALLED PER THE DETAILS ON THE DSA APPROVED CONSTRUCTION DOCUMENTS. THE FOLLOWING COMPONENTS SHALL BE ANCHORED OR BRACED TO MEET THE FORCE AND DISPLACEMENT REQUIREMENTS PRESCRIBED IN THE 2022 CBC SECTIONS 1617A.1.18 THROUGH 1617A.1.26 AND ASCE 7-16 CHAPTER 13, 26, AND 30:

1. ALL PERMANENT EQUIPMENT AND COMPONENTS.
2. TEMPORARY, MOVEABLE OR MOBILE EQUIPMENT THAT IS PERMANENTLY ATTACHED (E.G. HARD WIRED) TO THE BUILDING UTILITY SERVICES SUCH AS ELECTRICITY, GAS OR WATER. "PERMANENTLY ATTACHED" SHALL INCLUDE ALL ELECTRICAL CONNECTIONS EXCEPT PLUGS FOR 110/220 VOLT RECEPTACLES HAVING A FLEXIBLE CABLE.
3. TEMPORARY, MOVABLE OR MOBILE EQUIPMENT WHICH IS HEAVIER THAN 400 POUNDS OR HAS A CENTER OF MASS LOCATED 4 FEET OR MORE ABOVE THE ADJACENT FLOOR OR ROOF LEVEL THAT DIRECTLY SUPPORT THE COMPONENT IS REQUIRED TO BE RESTRAINED A MANNER APPROVED BY DSA.

THE FOLLOWING MECHANICAL AND ELECTRICAL COMPONENTS SHALL BE POSITIVELY ATTACHED TO THE STRUCTURE, BUT NEED NOT DEMONSTRATE DESIGN COMPLIANCE WITH REFERENCES NOTED ABOVE. THESE COMPONENTS SHALL HAVE FLEXIBLE CONNECTIONS PROVIDED BETWEEN THE COMPONENT AND ASSOCIATED DUCTWORK, PIPING, AND CONDUIT. FLEXIBLE CONNECTIONS MUST ALLOW MOVEMENT IN BOTH TRANSVERSE AND LONGITUDINAL DIRECTION.

A. COMPONENTS WEIGHING LESS THAN 400 POUNDS AND HAVE A CENTER OF MASS LOCATED 4 FEET OR LESS ABOVE THE ADJACENT FLOOR OR ROOF LEVEL THAT DIRECTLY SUPPORT THE COMPONENT.
B. COMPONENTS WEIGHING LESS THAN 20 POUNDS, OR IN THE CASE OF DISTRIBUTED SYSTEMS, LESS THAN 5 POUNDS PER FOOT, WHICH ARE SUSPENDED FROM A ROOF OR FLOOR OR HUNG FROM A WALL.

THE ANCHORAGE OF ALL MECHANICAL, ELECTRICAL AND PLUMBING COMPONENTS SHALL BE SUBJECT TO THE APPROVAL OF THE DESIGN PROFESSIONAL IN GENERAL RESPONSIBLE CHARGE OR STRUCTURAL ENGINEER DELEGATED RESPONSIBILITY AND ACCEPTANCE BY DSA. THE PROJECT INSPECTOR WILL VERIFY THAT ALL COMPONENTS AND EQUIPMENT HAVE BEEN ANCHORED IN ACCORDANCE WITH THE ABOVE REQUIREMENTS.

APPLICABLE CODE: 2022 CBC

PIPING, DUCTWORK, AND ELECTRICAL DISTRIBUTION SYSTEM BRACING NOTE

PIPING, DUCTWORK, AND ELECTRICAL DISTRIBUTION SYSTEMS SHALL BE BRACED TO COMPLY WITH THE FORCES AND DISPLACEMENTS PRESCRIBED IN ASCE 7-16 SECTION 13.3 AS DEFINED IN ASCE 7-16 SECTIONS 13.6.5, 13.6.6, 13.6.7, 13.6.8; AND 2022 CBC, SECTION 1617A.1.24, 1617A.1.25 AND 1617A.1.26.

THE METHOD OF SHOWING BRACING AND ATTACHMENTS TO THE STRUCTURE FOR THE IDENTIFIED DISTRIBUTION SYSTEM ARE AS NOTED BELOW. WHEN BRACING AND ATTACHMENTS ARE BASED ON A PREAPPROVED INSTALLATION GUIDE (E.G., HCAI OPM FOR 2013 CBC OR LATER), COPIES OF THE BRACING SYSTEM INSTALLATION GUIDE OR MANUAL SHALL BE AVAILABLE ON THE JOBSITE PRIOR TO THE START OF AND DURING THE HANGING AND BRACING OF THE DISTRIBUTION SYSTEMS. THE STRUCTURAL ENGINEER OF RECORD SHALL VERIFY THE ADEQUACY OF THE STRUCTURE TO SUPPORT THE HANGER AND BRACE LOADS.

MECHANICAL PIPING (MP), MECHANICAL DUCTS (MD), PLUMBING PIPING (PP), ELECTRICAL DISTRIBUTION SYSTEMS (E):

MP ☒ MD ☒ PP ☐ E ☐ - OPTION 1: DETAILED ON THE APPROVED DRAWINGS WITH PROJECT SPECIFIC NOTES AND DETAILS.
MP ☐ MD ☐ PP ☐ E ☐ - OPTION 2: SHALL COMPLY WITH HCAI (OSHPD) PRE-APPROVAL (OPM #) #_____, AS INCLUDED IN THESE DRAWINGS WITH PROJECT-SPECIFIC NOTES AND DETAILS.

LIST OF DRAWINGS

M1.0	MECHANICAL NOTES
M1.1	MECHANICAL SCHEDULES
M2.0	FIRST FLOOR DEMOLITION PLAN
M2.1	ROOF DEMOLITION PLAN
M3.0	FIRST FLOOR MECHANICAL PLAN
M3.1	SECOND FLOOR MECHANICAL PLAN
M3.2	MEZZANINE MECHANICAL PLAN
M3.3	IT/ELEC. MECHANICAL FLOOR PLAN
M4.0	MECHANICAL ROOF PLAN
M5.0	MECHANICAL DETAILS
M5.1	MECHANICAL DETAILS
M6.0	MECHANICAL CONTROLS
EN1.0	ENERGY NOTES

SEE MECH. SCHEDULE FOR DESCRIPTIONS

	VOLUME DAMPER
	THERMOSTAT
	RETURN AIR PLENUM (LINED)
	SUPPLY AIR PLENUM (LINED)
X	EQUIPMENT TAG SEE MECH. SCHEDULE
	ROUND DUCTWORK
	RECTANGULAR DUCTWORK

ABBREVIATIONS

ABBREV.	ABBREVIATIONS
ABV.	ABOVE
APPROX.	APPROXIMATELY
AFF	ABOVE FINISHED FLOOR
AHU	AIR HANDLING UNIT
BLDG	BUILDING
BLW.	BELOW
BTM	BOTTOM
BTR	BETTER
CD	CEILING DIFFUSER
CFM	CUBIC FEET PER MINUTE
CL	CENTERLINE
CLG	CEILING
CONC	CONCRETE
COND	CONDENSATE
CONT	CONTINUED
DF	DOUGLAS FIR
DIA	DIAMETER
DN	DOWN
DSA	DIVISION OF THE STATE ARCHITECT
DWG	DRAWING
(E)	EXISTING
EA	EACH
EL,ELEV	ELEVATION
ELEC	ELECTRIC
EQ	EQUIPMENT
EQUIP	EQUIPMENT
ESP	EXTERNAL STATIC PRESSURE
EXH	EXHAUST
FIN	FINISHED
FLR	FLOOR
FRM	FROM
G	GAS
GDW	GYPSUM DRYWALL
GPM	GALLONS PER MINUTE
GSM	GALVANIZED STEEL METAL
HDG	HOT DIPPED GALVANIZED
HP	HORSE POWER
MIN.	MINIMUM
MEZZ.	MEZZANINE
MAX.	MAXIMUM
MTL	METAL
(N)	NEW
(NC)	NORMALLY CLOSED
OC	ON CENTER
OSA	OUTSIDE AIR
POC	POINT OF CONNECTION
POD	POINT OF DISCONNECTION
PT	PRESSURE TREATED
RAG	RETURN AIR GRILLE
RAR	RETURN AIR REGISTER
SA	SUPPLY AIR
SD	SMOKE DETECTOR
SHT	SHEET
SMS	SHEET METAL SCREW
SR	SIDEWALL REGISTER
SOV	SHUT-OFF VALVE
SPEC	SPECIFICATIONS
STL	STEEL
UGND	UNDERGROUND
VD	VOLUME DAMPER (LOCKING)
VTR	VENT TO ROOF
VAV	VARIABLE AIR VOLUME BOX
VFD	VARIABLE FREQUENCY DRIVE
WC	WATER COLUMN
(TYP)	TYPICAL

DIVISION OF THE STATE ARCHITECT

IDENTIFICATION STAMP
DIV. OF THE STATE ARCHITECT
APP: 03-123218 INC:
REVIEWED FOR
SS ☑ FLS ☑ ACS ☑
DATE: 07/11/2024

AMADOR WHITTLE ARCHITECTS, INC.
28328 AGOURA ROAD, SUITE 203
AGOURA HILLS, CA 91301
(805) 530-3938 , (818) 874-0071

Ventura County Community College

PROJECT TITLE

ADMINISTRATION BUILDING RENOVATION

7075 CAMPUS ROAD
MOORPARK, CA 91320

CONSULTANT

AE Group
Mechanical Engineers
838 East Front Street
Ventura, California 93001-2925
(805) 653-1722
hugh@aegroupme.com

STAMPS/SEALS

REGISTERED PROFESSIONAL ENGINEER HUGH A. McTERNAN M030626 Ren. 6/30/24 STATE OF CALIFORNIA

LICENSED ARCHITECT JEAN ANN AMADOR C-22205 APRIL 30, 2025 DATE STATE OF CALIFORNIA

SHEET TITLE:

MECHANICAL NOTES

PROJECT NO:	PROJECT ARCH:
DRAWN: JS/HM	CHECKED: HM/PW/TP

SHEET NUMBER:

M1.0

DATE: 12/22/23 | SHEET: ____ OF ____

IF THIS SHEET IS NOT 30" X 42", IT IS NOT FULL SIZE, SCALE ACCORDINGLY

PACKAGE ROOFTOP UNITS

NEW PACKAGED ROOFTOP GAS - ELECTRIC UNIT SCHEDULE

		AREA SERVED	MAKE MODEL	(N) OPER WT (LBS)	CURB WEIGHT (LBS)	EER	IEER	NOMINAL TONS	COOLING CAPACITY (MBTU/HR) TOTAL	COOLING CAPACITY (MBTU/HR) SENSIBLE	COOLING AMBIENT AIR TEMP DB F	COOLING AMBIENT AIR TEMP WB F	COOLING ENT COIL TEMP DB F	COOLING ENT COIL TEMP WB F	HEATING (GAS) CAPACITY (MBTU/HR) INPUT	HEATING (GAS) CAPACITY (MBTU/HR) OUTPUT	INDOOR FANS TYPE OF FANS	INDOOR FANS CFM	INDOOR FANS EXT SP (IN WC)	ELEC DATA INDOOR FAN	ELEC DATA POWER EXHAUST	ELEC DATA V	ELEC DATA PH	ELEC DATA Hz	ELEC DATA MCA	ELEC DATA MOCP	SUPPLY DUCT SMOKE DETECTOR SHUTDOWN	MIN OUTSIDE AIR (CFM)	CO2 CONTROL FACTORY INSTALLED	FILTER	DISCHARGE	OPTIONS	ANCHOR DETAIL
AC 1		1ST FLOOR EAST	YORK AV20T1CH2T4LHA4G1	2200	615	10.8	14.2	20	223	200	105	67	82	63	220/165	178/134	CENTRIFUGAL	7,000	1.50	10 BHP	3/4 HP	208	3	60	149	175	Y	1600	YES	4" MERV 13	VERTICAL	HIGH STATIC BELT DRIVE, DUAL ENTHALPY ECONOMIZER, MODULATING POWER EXHAUST, BACNET, E-COATED CONDESER AND EVAPORATOR COILS, STAINLESS HEAT EXCHANGER, FAULT DETECTION FOR ECONOMIZER & REFRIGERANT. PHASE MONITOR. VAV VARIABLE FREQUENCY DRIVE. CONDENSATE OVERFLOW SWITCH. PROVENT ISO CURB. BACNET MSTP.	1/M5.1
AC 2		1ST FLOOR WEST	YORK AV20T1CH2T4LHA4G1	2200	615	10.8	14.2	20	223	200	105	67	82	63	220/165	178/134	CENTRIFUGAL	7,000	1.50	10 BHP	3/4 HP	208	3	60	149	175	Y	1600	YES	4" MERV 13	VERTICAL		

HEAT PUMP WATER HEATER

ITEM TAG	LOCATION	AREA SERVED	MAKE AND MODEL (N) MULTISTACK BASIS OF DESIGN	(N) OPER WT. LBS	HEATING CAPACITY (MBTU/HR) @ 32F DB	FLOWRATE GPM @ FT HEAD	ELEC DATA V	PH	Hz	MCA	MOCP	NOTES	ANCHOR DETAIL
HP 1	ROOF	1st FLOOR	ARA-30L	2915 LBS ISO BASE 950 LBS	258,000 BTU/H	26 @ 1.2'	208	3	60	173	250	BACNET MSTP COATED COILS MW SAUSSE SPRING ISO BASE	2/M5.1 3/M5.1 15/S301

SPLIT SYSTEM

ITEM	LOCATION	AREA SERVED	MAKE AND MODEL (N) BASIS OF DESIGN	(N) OPER WT. LBS	CAPACITY BTUH @ 75 F DB 61 F WB	CFM @ " WC	ELEC DATA V	PH	Hz	MCA	MOCP	OPTIONS	DETECTOR SHUTDOWN	ANCHOR DETAIL
SS 1A	ROOF	IT RM	ABOVE AIR XP1018S3EC00000A	140	62.000		208	3	60	2.5	15	COATED CONDENSER COIL		3/M5.0
SS 1B	IT RM	IT RM	ABOVE AIR MCE018S3MG00HECUF0S1	600	62,000	3,000 @ .2"	208	3	60	45.5	60	UPFLOW, STEAM HUMIDIFIER HOT GAS RE-HEAT, LOW AMBIENT HEAD PRESSURE CONTROL REMOTE WATER LEAK, 4" MERV 10 FILTERS	YES	
SS 2A	ROOF	IT RM	ABOVE AIR XP1018S3EC00000A	140	60,700		208	3	60	2.5	15	COATED CONDENSER COIL		3/M5.0
SS 2B	IT RM	IT RM	ABOVE AIR MCE018S3MG00HECUF0S1	600	60,700	3,000 @ .2"	208	3	60	45.5	60	UPFLOW, STEAM HUMIDIFIER HOT GAS RE-HEAT, LOW AMBIENT HEAD PRESSURE CONTROL REMOTE WATER LEAK, 4" MERV 10 FILTERS	YES	
SS 3A	ROOF	PHONE RM	SAMSUNG AC024JXADCH/AA	240	24,000		208	1	60	13	20	OPTIONS COATED CONDENSER		2/M5.0
SS 3B	ELEC RM	PHONE RM	SAMSUNG AC024MNADCH/AA	32	24,000		OUTDOOR UNIT POWERS INDOOR UNIT					WIRED THERMOSTAT		
SS 4A	ROOF	PHONE RM	SAMSUNG AC024JXADCH/AA	240	24,000		208	1	60	13	20	OPTIONS COATED CONDENSER		2/M5.0
SS 4B	PHONE RM	PHONE RM	SAMSUNG AC024MNADCH/AA	32	24,000		OUTDOOR UNIT POWERS INDOOR UNIT					ALC THERMOSTAT THERMOSTAT ADAPTOR		

HYDRONIC PUMPS

ITEM	LOCATION	AREA SERVED	MAKE AND MODEL (N) BASIS OF DESIGN	(N) OPER WT. LBS	FLOWRATE GPM	DIFF. PRESSURE (FT)	HP	ELEC DATA V	PH	Hz	MCA	MOCP	CONTROL	ANCHOR DETAIL
P 1	MECH RM	HEAT PUMP LOOP	GRUNDFOS 10707 LC	55	30	25	0.5	208	1	60	4.6	15	MOTOR STARTER	7/M5.0
P 2	MECH RM	HYDRONIC LOOP	GRUNDFOS 12507 LC	60	50	50	1.5	208	3	60	5.0	15	ABB VFD	

EXHAUST FAN

ITEM	LOCATION	AREA SERVED	MAKE AND MODEL (N) BASIS OF DESIGN	(N) OPER WT. LBS	EXHAUST CFM	ESP WC IN	ELEC DATA V	PH	Hz	MCA	MOCP	CONTROL	ANCHOR DETAIL
EF 1	ROOF	MEN'S WOMEN'S RESTROOMS	GREENHECK G-133-B	52	800	0.7	110	1	60	2	15	EMS CONTROL	1/M5.0
EF 2	RESTROOM	ALL-GENDER RESTROOMS	PANASONIC FV-0511VK2	12	100	0.25	120	1	60	.1	.2	MOTION SENSOR TIME DELAY	
EF 3	ROOF	ELECTRICAL ROOM	GREENHECK G-133-B	52	800	0.7	110	1	60	2	15	LINE VOLATAGE THERMOSTAT	1/M5.0

HYDRONIC ACCESSORIES

TAG	DESCRIPTION	SERVICE	MAKE MODEL	CONNECTIONS	NOTES	ANCHORAGE DETAIL
	BALL VALVE	HEATING WATER	NIBCO OR STOCKHAM	SOLDER/THREADED	INSTALL AT LOCATION SHOWN ON PLANS	NA
	WYE STRAINER	HEATING WATER	STOCKHAM	2" NPT	INSTALL NEW ON HOT WATER LOOP	NA
	VIBRATION ISOLATION	HEATING WATER	MASON INDUSTRIES SAFEFLEX SFDEJ	VARIES	INSTALL AT CHILLERS, BOILERS & PUMP CONNECTIONS SECURE PIPE PER MANUFACTURERS RECOMENDATIONS	NA
VT 1	VOLUME TANK	HEATING WATER	AMERICAN WHEATLY AWCBT-250	FOUR 2-1/2" FLANGED TWO 3/4" NPT	ASME 250 GALLONS. FACTORY INSULATED (R-16) ANCHOR TO RESIST SEISMIC MOTION. WEIGHT 2772 LBS.	5/M5.0
ET 1	EXPANSION TANK	HEATING WATER	AMTROL AX40DD(V)	3/4" NPT	ANCHOR TO RESIST SEISMIC MOTION. WEIGHT 160 LBS. ACCEPTANCE VOLUME - 11.3 GALLONS	6/M5.00
CT 1	CHEMICAL FEED TANK	HEATING WATER	AMERICAN WHEATLY MODEL VFT-002-O	3/4" NPT	FLUSH SYSTEM AND PROVIDE ONE YEAR CHEMICAL TREATMENT SERVICE 40 LBS	8/M5.00
BFP 1	BACKFLOW PREVENTER	HEATING WATER	WATTS 909	1" NPT	WYE STRAINER & ISOLATION VALVES	NA
AS 1	AIR SEPERATOR	HEATING WATER	BELL & GOSSETT MODEL R-4	2" NPT	W/ BLOWDOWN VALVE PIPED TO FLOOR SINK	NA
FV 1	FILL VALVE	HEATING WATER	BELL & GOSSETT MODEL F8-TU	1/2" NPT	PRESSURE REGULATOR/FILL VALVE	NA

AIR DISTRIBUTION DEVICES

CDS CEILING DIFFUSER, SURFACE MOUNT, TITUS PAS WHITE, FACE AND NECK SIZE ON PLANS

CDT CEILING DIFFUSER, T-BAR TYPE, TITUS PAS WHITE, FACE AND NECK SIZE ON PLANS

RAT RETURN AIR REGISTER TITUS PAR AA WHITE T BAR TYPE

EAS EXHAUST AIR SURFACE MOUNT. TITUS MODEL PAR AA WHITE

SR SUPPLY REGISTER TITUS MODEL 350FL ALUMINUM WHITE

TGS TRANSFER GRILLE SURFACE MOUNT TITUS PAR WHITE. NECK SIZE ON PLANS

TGT TRANSFER GRILLE T-BAR MOUNT TITUS PAR WHITE. NECK SIZE ON PLANS

FIRE/LIFE SAFETY EQUIPMENT

SD 1 SMOKE DETECTOR - DUCT TYPE. SYSTEM SENSOR MODEL D4120 24V OR 110V
WIRE FOR UNIT SHUTDOWN UPON DETECTION. INTEGRATE INTO FIRE ALARM WITH ADDRESSABLE RELAY

VAV SCHEDULE

ROOM	Occupancy	VAV #	Unit	VAV MODEL	VAV Size	CFM COOLING SUPPLY	Min.	CFM HEATING SUPPLY CFM	COIL 145 F to 125 F ROWS	GPM	Belimo Valve
100	misc				*110	350	140	210			
101	office	1	1	DESV	10	1500	600	900	2 row	2.9	B312
102	office	2	1	DESV	5	300	120	180	1 row	1.4	B210
103	office	3	1	DESV	7	490	196	294	2 row	1.4	B210
104	br room	4	1		*103	140	56	84			
105	office	4	1	DESV	7	440	176	264	2 row	1.4	B210
106	office	5	1	DESV	6	300	120	180	1 row	1.4	B210
107	misc						0	0			
108	office	6	1	DESV	8	650	260	390	1 row	2.0	B211
109	conf	7	1	DESV	10	950	380	570	1 row	2.3	B212
110	office	8	1	DESV	12	1450	580	870	1 row	4.3	B313
111	misc					0	0	0			
112	misc					0	0	0			
113	misc		1		*110	700	280	420			
164	office	9	1	DESV	4	110	44	66	1 row	1.1	B210
165	office	10	1	DESV	4	90	36	54	1 row	1.4	B210
166	office	11	1	DESV	6	350	140	210	1 row	1.4	B210
167	office	12	1	DESV	4	130	52	78	1 row	0.7	B209
168	office	13	1	DESV	4	130	52	78	1 row	0.7	B209
169	office	14	1	DESV	4	130	52	78	1 row	0.7	B209
170	office	15	1	DESV	4	130	52	78	1 row	0.7	B209
171	office	16	1	DESV	5	230		138	1 row	0.7	B209
172 & 173	office	17	1	DESV	6	400		240	1 row	1.4	B210
162											
163											
114	office	18	2	DESV	4	140	56	84	1 row	0.7	B209
115	office	19	2	DESV	4	140	56	84	1 row	0.7	B209
116	office	20	2	DESV	4	140	56	84	1 row	0.7	B209
117	office	21	2	DESV	4	140	56	84	1 row	0.7	B209
118	office	22	2	DESV	4	140	56	84	1 row	0.7	B209
119	office	23	2	DESV	4	160	64	96	1 row	0.7	B209
120	office	24	2	DESV	4	180	72	108	1 row	0.7	B209
121	office	25	2	DESV	4	160	64	96	1 row	0.7	B209
122	misc					0	0	0			
123	office	26	2	DESV	5	250	100	150	1 row	0.9	B209
124	office				*127	250	100	150	1 row	0.9	B209
125	misc					0	0	0			
126						0	0	0			
127	office	27	2	DESV	6	120	48	72	1 row	0.7	B209
128	office	28	2	DESV	4	120	48	72	1 row	0.7	B209
129	office	29	2	DESV	6	120	48	72	1 row	0.7	B209
130	misc				*133	200	80	120			
131	office	30	2	DESV	4	100	40	60	1 row	0.7	B209
132	STORAGE					0	0	0			
133	office	31	2	DESV	6	100	40	60	1 row	0.7	B209
134	STORAGE					0	0	0			
135	office		2		*133	60	24	36			
136	STORAGE					0	0	0			
137	office				*129	120	48	72			
138	waiting				*129	120	48	72			
139	misc				*142 &147	200	80	120			
140	office	32	2	DESV	4	120	48	72	1 row	0.7	B209
141	office	33	2	DESV	5	240	96	144	1 row	1	B210
142	office	34	2	DESV	4	90	36	54	1 row	0.7	B209
143	office	35	2	DESV	4	90	36	54	1 row	0.7	B209
144	office	36	2	DESV	4	90	36	54	1 row	0.7	B209
145	CONF	37	2	DESV	10	800	320	480	1 row	2.9	B312
146	office	38	2	DESV	4	145	57.8	86.7	1 row	0.7	B209
147	office	39	2	DESV	4	90	36	54	1 row	0.7	B209
148	office	40	2	DESV	4	90	36	54	1 row	0.7	B209
149	Restroom										
150	VESTIBULE										
151	Restroom										
152	JANITOR										
153	VESTIBULE										
154	TEL/IT										
155	MECHANICAL										
156	office	41		DESV	6	320	128	192	1 row	0.7	B209
157	hallway				*156	80	32	48			
158	office	42	2	DESV	4	100	40	60	1 row	0.5	B209
159	office	43	2	DESV	6	370	148	222	1 row	2	B311
160	office	44	2	DESV	4	190	76	114	1 row	1	B210

*XXX symbolizes area served by common VAV with room number shown

DIVISION OF THE STATE ARCHITECT

IDENTIFICATION STAMP
DIV. OF THE STATE ARCHITECT
APP: 03-123218 INC:
REVIEWED FOR
SS ☑ FLS ☑ ACS ☑
DATE: 07/11/2024

AMADOR WHITTLE
ARCHITECTS, INC.
28328 AGOURA ROAD, SUITE 203
AGOURA HILLS, CA 91301
(805) 530-3938 , (818) 874-0071

Ventura County Community College

PROJECT TITLE

ADMINISTRATION BUILDING RENOVATION

7075 CAMPUS ROAD
MOORPARK, CA 91320

CONSULTANT

AE Group
Mechanical Engineers
838 East Front Street
Ventura, California 93001-2925
(805) 653-1722
hugh@aegroupme.com

STAMPS/SEALS

REGISTERED PROFESSIONAL ENGINEER HUGH A. METERAN M030626 Ren. 6/30/24 MECHANICAL STATE OF CALIFORNIA

LICENSED ARCHITECT SAM ANN AMADOR C-22205 APRIL 30, 2025 DATE STATE OF CALIFORNIA

SHEET TITLE:

MECHANICAL SCHEDULES

PROJECT NO.: | PROJECT ARCH:
DRAWN: JS/HM | CHECKED: HM/PW/TP

SHEET NUMBER:

M1.1

DATE: 12/22/23 | SHEET: ___ OF ___

IF THIS SHEET IS NOT 30" X 42", IT IS NOT FULL SIZE, SCALE ACCORDINGLY

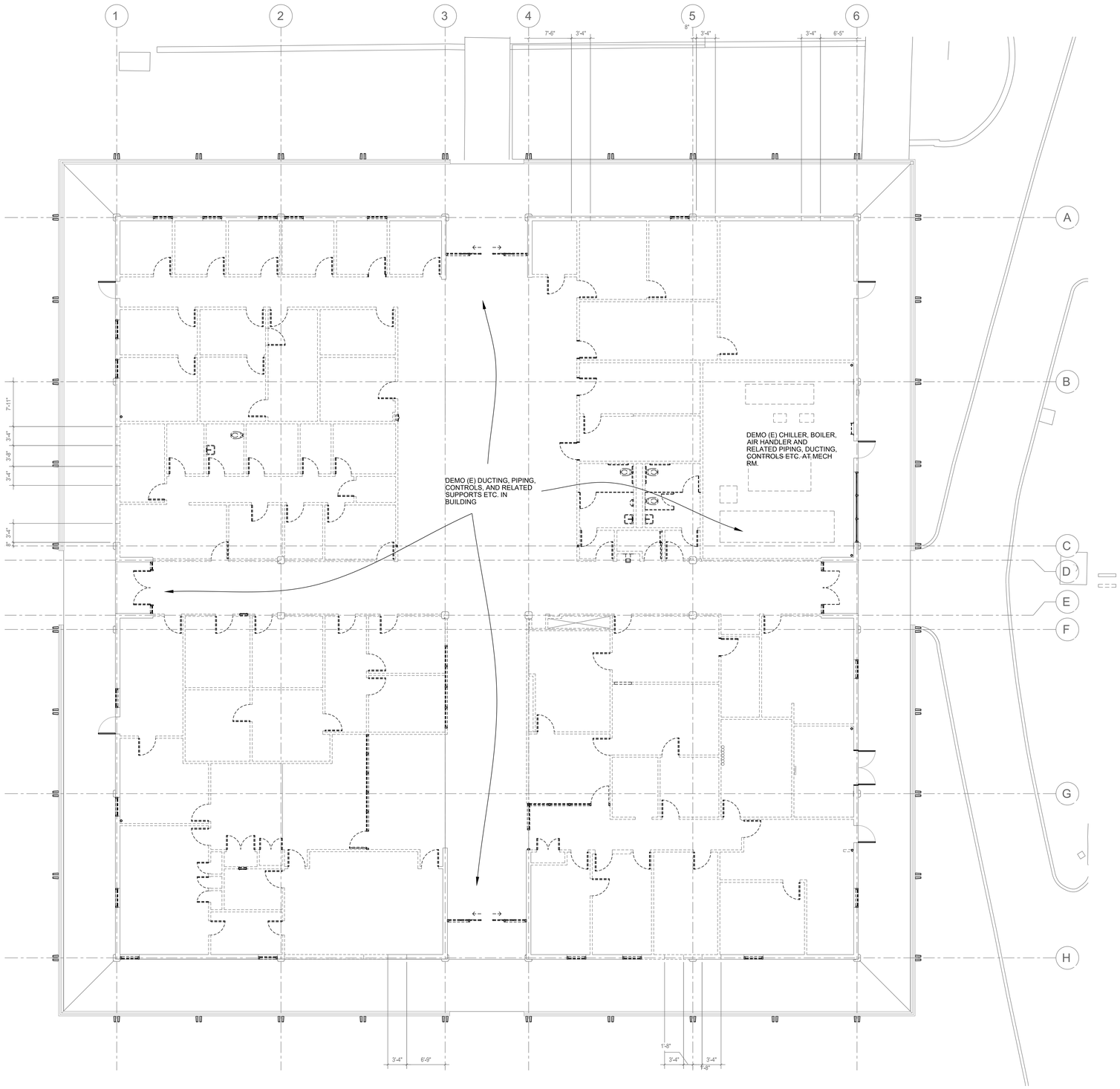

1 MECHANICAL DEMO FLOOR PLAN
1/8" = 1'-0"

NORTH

DIVISION OF THE STATE ARCHITECT

IDENTIFICATION STAMP
DIV. OF THE STATE ARCHITECT
APP: 03-123218 INC:
REVIEWED FOR
SS ☑ FLS ☑ ACS ☑
DATE: 07/11/2024

AMADOR WHITTLE
ARCHITECTS, INC.
28328 AGOURA ROAD, SUITE 203
AGOURA HILLS, CA 91301
(805) 530-3938 , (818) 874-0071

Ventura County Community College

PROJECT TITLE

ADMINISTRATION BUILDING RENOVATION

7075 CAMPUS ROAD
MOORPARK, CA 91320

CONSULTANT

AE Group
Mechanical Engineers
838 East Front Street
Ventura, California 93001-2925
(805) 653-1722
hugh@aegroupme.com

STAMPS/SEALS

REGISTERED PROFESSIONAL ENGINEER
HUGH A. McTERNAN
M030626
Ren. 6/30/24
MECHANICAL
STATE OF CALIFORNIA

LICENSED ARCHITECT
JEAN ANN AMADOR
C-22205
APRIL 30, 2025
DATE
STATE OF CALIFORNIA

SHEET TITLE:

MECHANICAL DEMO FLOOR PLAN

PROJECT NO:	PROJECT ARCH:
DRAWN: JS/HM	CHECKED: HM/PW/TP

SHEET NUMBER:

M2.0

DATE: 12/22/23 | SHEET: ___ OF ___

IF THIS SHEET IS NOT 30" X 42", IT IS NOT FULL SIZE, SCALE ACCORDINGLY

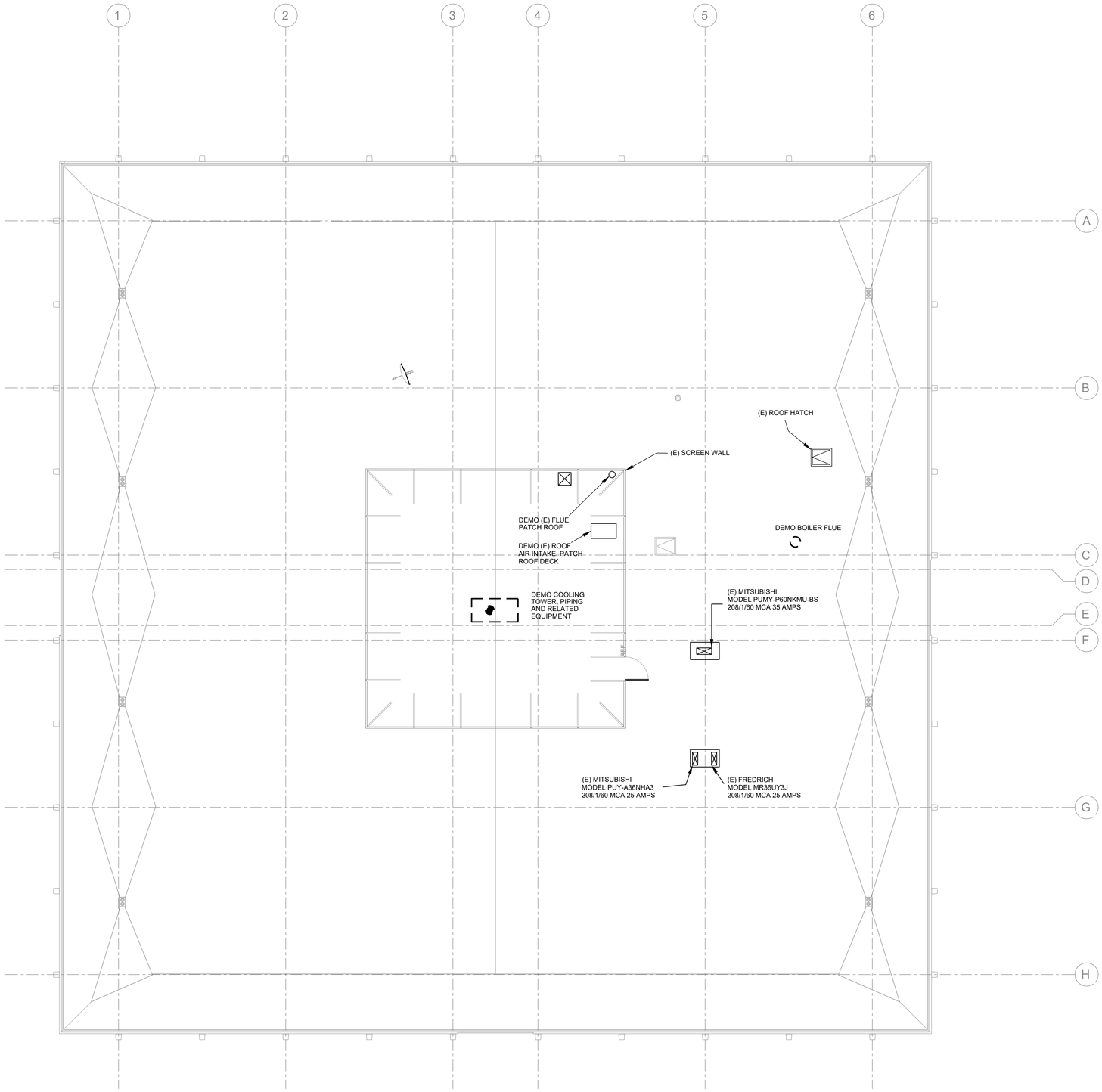

1 MECHANICAL DEMO ROOF PLAN
1/8" = 1'-0"

NORTH

DIVISION OF THE STATE ARCHITECT

IDENTIFICATION STAMP
DIV. OF THE STATE ARCHITECT
APP: 03-123218 INC:
REVIEWED FOR
SS ☑ FLS ☑ ACS ☑
DATE: 07/11/2024

AMADOR WHITTLE
ARCHITECTS, INC.
28328 AGOURA ROAD, SUITE 203
AGOURA HILLS, CA 91301
(805) 530-3938 , (818) 874-0071

Ventura County Community College

PROJECT TITLE

ADMINISTRATION BUILDING RENOVATION

7075 CAMPUS ROAD
MOORPARK, CA 91320

CONSULTANT

AE Group
Mechanical Engineers
838 East Front Street
Ventura, California 93001-2925
(805) 653-1722
hugh@aegroupme.com

STAMPS/SEALS

REGISTERED PROFESSIONAL ENGINEER
HUGH A. McTERNAN
M030626
Ren. 6/30/24
MECHANICAL
STATE OF CALIFORNIA

LICENSED ARCHITECT
JEAN ANN AMADOR
C-22205
APRIL 30, 2025
DATE
STATE OF CALIFORNIA

SHEET TITLE:

MECHANICAL ROOF DEMO PLAN

PROJECT NO.:	PROJECT ARCH.:
DRAWN: JS/HM	CHECKED: HM/PW/TP

SHEET NUMBER:

M2.1

DATE: 12/22/23 | SHEET: ____ OF ____

IF THIS SHEET IS NOT 30" X 42", IT IS NOT FULL SIZE, SCALE ACCORDINGLY

SEE M3.1 FOR CONTINUATION

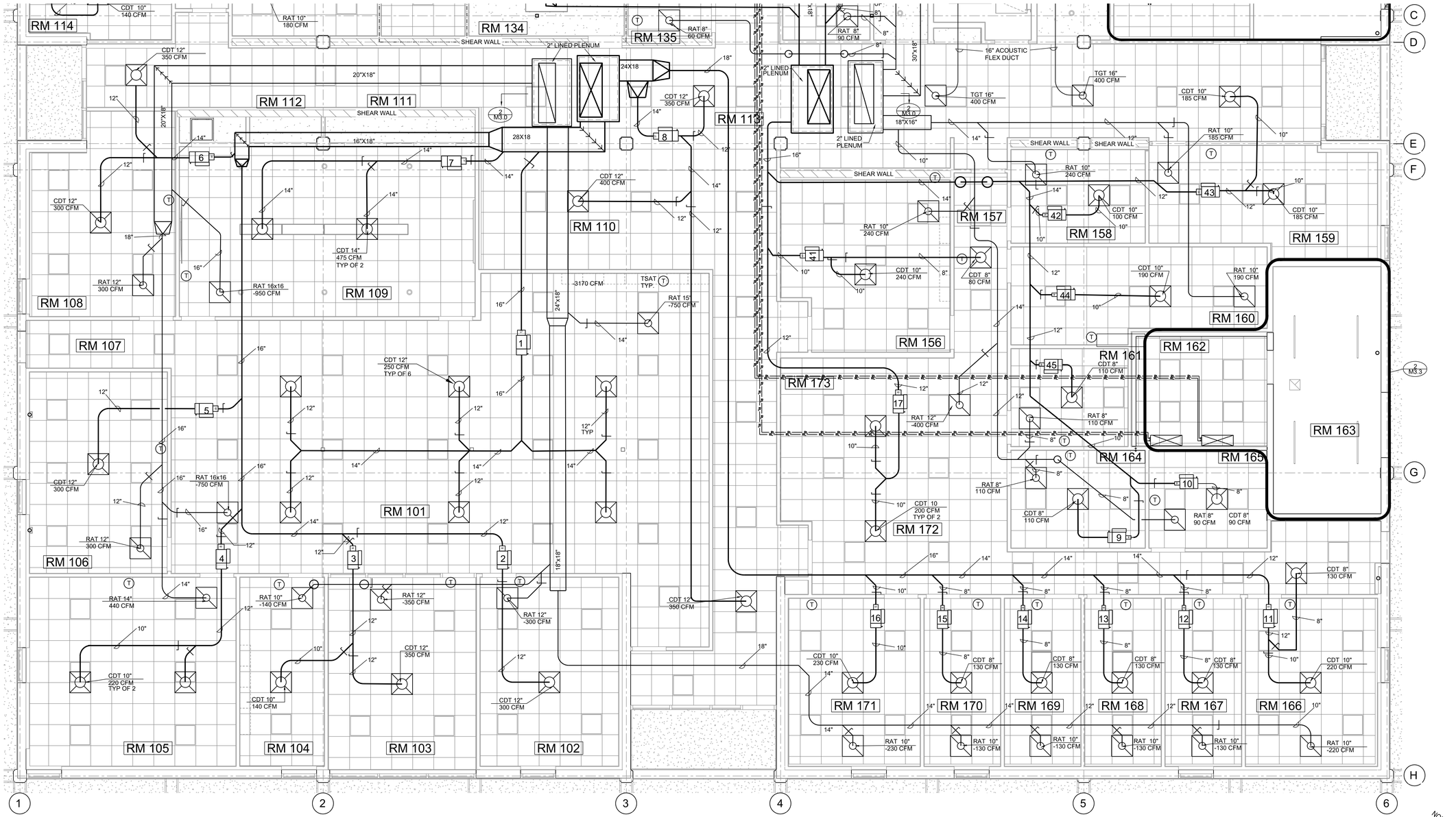

1 MECHANICAL FLOOR PLAN EAST
1/4" = 1'-0"

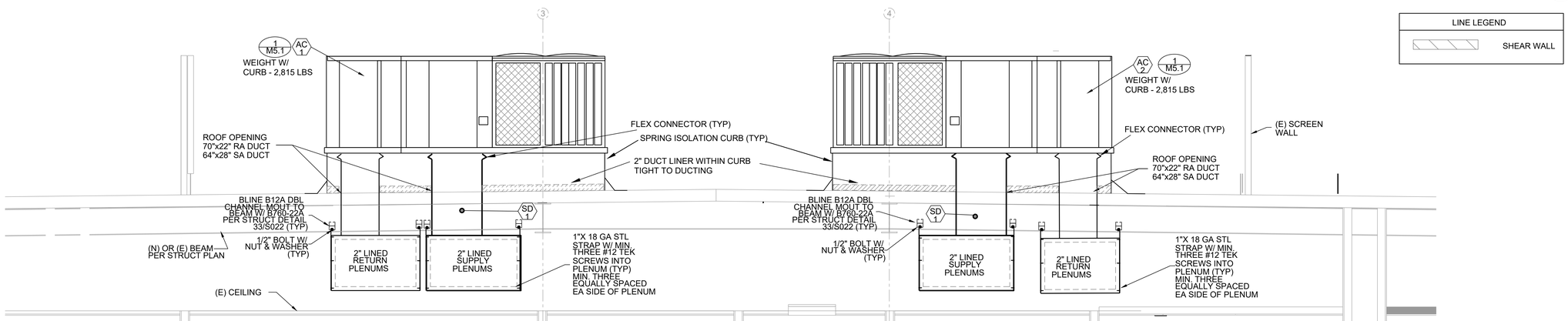

2 MECHANICAL SECTION PLENUM DETAIL
NO SCALE

LINE LEGEND

SHEAR WALL

DIVISION OF THE STATE ARCHITECT

IDENTIFICATION STAMP
DIV. OF THE STATE ARCHITECT
APP: 03-123218 INC:
REVIEWED FOR
SS ☑ FLS ☑ ACS ☑
DATE: 07/11/2024

AMADOR WHITTLE
ARCHITECTS, INC.
28328 AGOURA ROAD, SUITE 203
AGOURA HILLS, CA 91301
(805) 530-3938 , (818) 874-0071

Ventura County Community College

PROJECT TITLE

ADMINISTRATION BUILDING RENOVATION

7075 CAMPUS ROAD
MOORPARK, CA 91320

CONSULTANT

AE Group
Mechanical Engineers
838 East Front Street
Ventura, California 93001-2925
(805) 653-1722
hugh@aegroupme.com

STAMPS/SEALS

REGISTERED PROFESSIONAL ENGINEER
HUGH A. MCTERNAN
M030626
Ren. 6/30/24
MECHANICAL
STATE OF CALIFORNIA

LICENSED ARCHITECT
JEAN ANN AMADOR
C-22205
APRIL 30, 2025
DATE:
STATE OF CALIFORNIA

SHEET TITLE:

MECHANICAL FLOOR PLAN EAST

PROJECT NO:
PROJECT ARCH:
DRAWN: JS/HM
CHECKED: HM/PW/TP

SHEET NUMBER:

M3.0

DATE: 12/22/23
SHEET: ___ OF ___

IF THIS SHEET IS NOT 30" X 42", IT IS NOT FULL SIZE, SCALE ACCORDINGLY

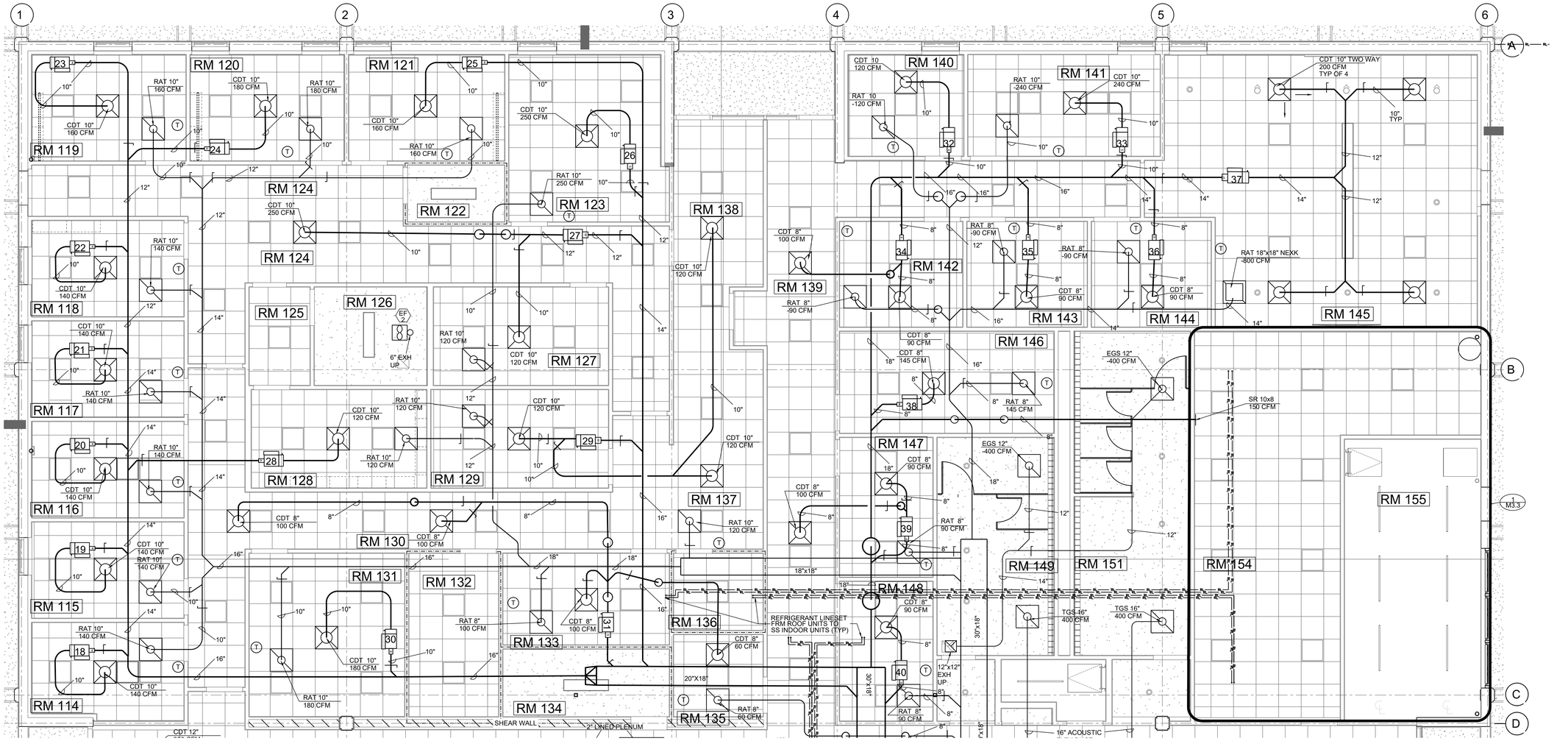

1 ENLARGED MECHANICAL FLOOR PLAN - WEST

1/4" = 1'-0"

DIVISION OF THE STATE ARCHITECT

IDENTIFICATION STAMP
DIV. OF THE STATE ARCHITECT
APP: 03-123218 INC:
REVIEWED FOR
SS ☑ FLS ☑ ACS ☑
DATE: 07/11/2024

AMADOR WHITTLE
ARCHITECTS, INC.
28328 AGOURA ROAD, SUITE 203
AGOURA HILLS, CA 91301
(805) 530-3938 , (818) 874-0071

Ventura County Community College

PROJECT TITLE

ADMINISTRATION BUILDING RENOVATION

7075 CAMPUS ROAD
MOORPARK, CA 91320

CONSULTANT

AE Group
Mechanical Engineers
838 East Front Street
Ventura, California 93001-2925
(805) 653-1722
hugh@aegroupme.com

STAMPS/SEALS

REGISTERED PROFESSIONAL ENGINEER
HUGH A. McTERNAN
M030626
Ren. 6/30/24
MECHANICAL
STATE OF CALIFORNIA

LICENSED ARCHITECT
JEAN ANN AMADOR
C-22205
APRIL 30, 2025
DATE
STATE OF CALIFORNIA

SHEET TITLE:

MECHANICAL FLOOR PLAN - WEST

PROJECT NO:	PROJECT ARCH:
DRAWN: JS/HM	CHECKED: HM/PW/TP

SHEET NUMBER:

M3.1

DATE: 12/22/23 | SHEET: ___ OF ___

IF THIS SHEET IS NOT 30" X 42", IT IS NOT FULL SIZE, SCALE ACCORDINGLY

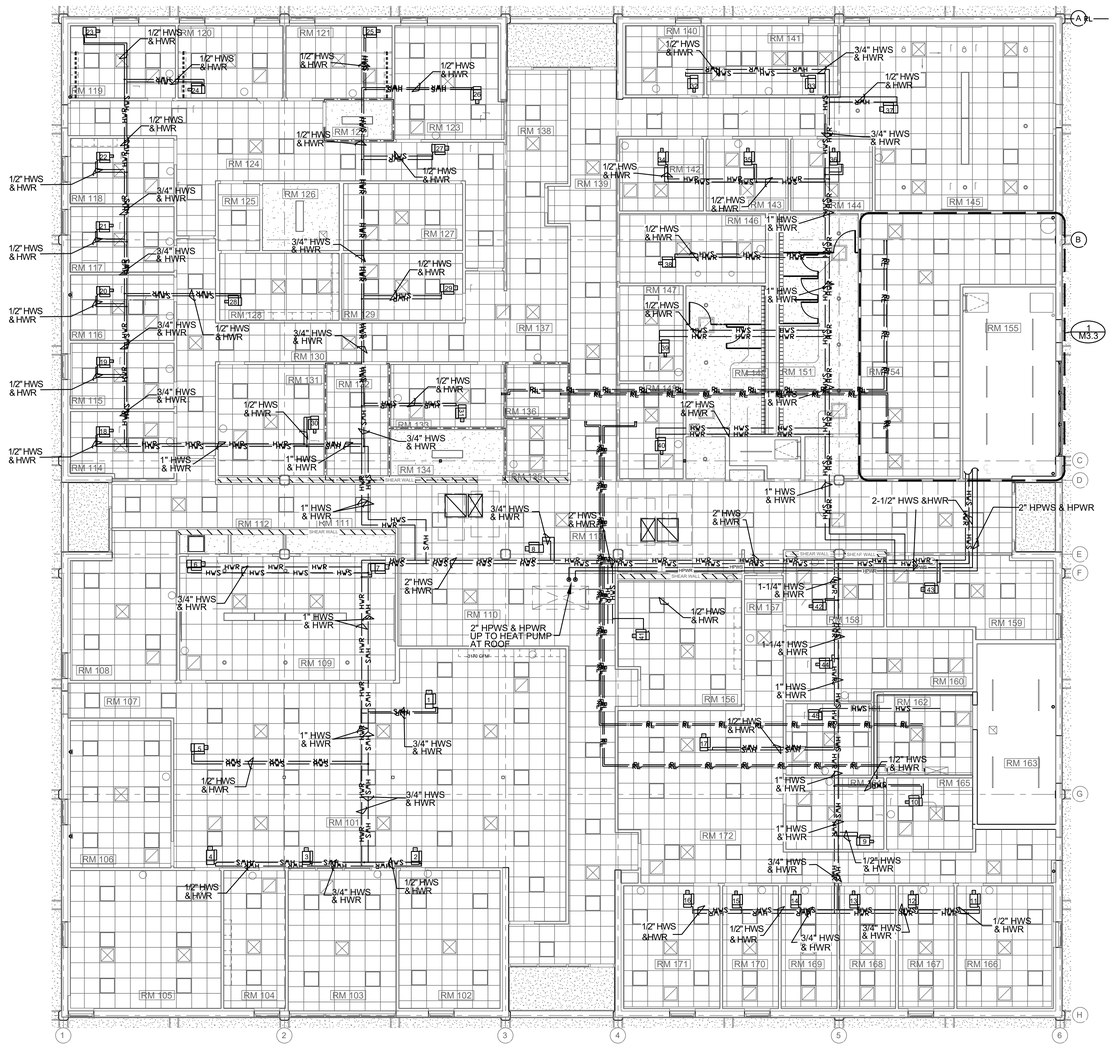

1 HYDRONIC FLOOR PLAN
1/8" = 1'-0"

LINE LEGEND	
HWS	HOT WATER SUPPLY
HWR	HOT WATER RETURN
HPWS	HEAT PUMP WATER SUPPLY
HPWR	HEAT PUMP WATER RETURN
	SHEAR WALL

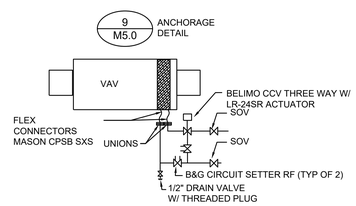

3 VAV PIPING DETAIL
NO SCALE

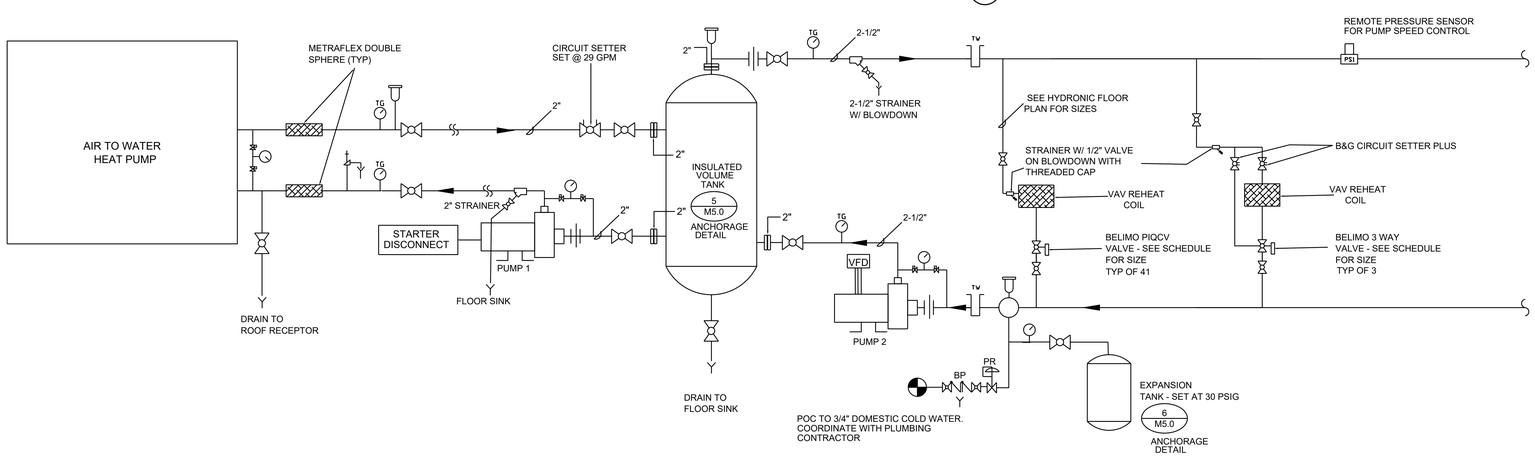

2 HYDRONIC PIPING SCHEMATIC
NO SCALE

SYMBOLS LEGEND

- HPWS — HEAT PUMP WATER SUPPLY
- HPWR — HEAT PUMP WATER RETURN
- UNION (DIELECTRIC AT DISIMILAR METALS)
- PRESSURE RELIEF VALVE PIPE TO FLOOR SINK OR RECEPTOR
- PRESSURE GAUGE - 0-60 PSIG W/ ISOLATION VALVE
- PS1 — REMOTE PRESSURE SENSOR FOR PUMP SPEED CONTROL
- NIBCO S580 -66-LF BALL VALVE
- DIFFERENTIAL PRESSURE GAUGE ASSEMBLY
- AIR VENT
- STRAINER PIPE TO FLOOR SINK
- HEAT PUMP WATER SUPPLY
- HEAT PUMP WATER RETURN
- AIR VENT W/ 1/4" BLEAD TO DRAIN
- PUMP WITH DIFF PRESSURE ASSEMBLY
- TV — TEMP SENSOR
- TG — TEMPERATURE GAUGE 0-200 DEG. F
- FLOW DIRECTION
- BP / PR — BACKFLOW PREVENTER PRESSURE REGULATION PIPE RELIEF TO DRAIN

DIVISION OF THE STATE ARCHITECT

IDENTIFICATION STAMP
DIV. OF THE STATE ARCHITECT
APP: 03-123218 INC:
REVIEWED FOR
SS ☑ FLS ☑ ACS ☑
DATE: 07/11/2024

AMADOR WHITTLE
ARCHITECTS, INC.
28328 AGOURA ROAD, SUITE 203
AGOURA HILLS, CA 91301
(805) 530-3938 , (818) 874-0071

Ventura County Community College

PROJECT TITLE

ADMINISTRATION BUILDING RENOVATION

7075 CAMPUS ROAD
MOORPARK, CA 91320

CONSULTANT

AE Group
Mechanical Engineers
838 East Front Street
Ventura, California 93001-2925
(805) 653-1722
hugh@aegroupme.com

STAMPS/SEALS

REGISTERED PROFESSIONAL ENGINEER HUGH A. McTERNAN M030626 Ren. 6/30/24 MECHANICAL STATE OF CALIFORNIA

LICENSED ARCHITECT JEAN ANN AMADOR C-22205 APRIL 30, 2025 DATE STATE OF CALIFORNIA

SHEET TITLE:

HYDRONIC FLOOR PLAN & DETAILS

PROJECT NO:	PROJECT ARCH:
DRAWN: JS/HM	CHECKED: HM/PW/TP

SHEET NUMBER:

M3.2

DATE: 12/22/23 SHEET: ___ OF ___

IF THIS SHEET IS NOT 30" X 42", IT IS NOT FULL SIZE, SCALE ACCORDINGLY

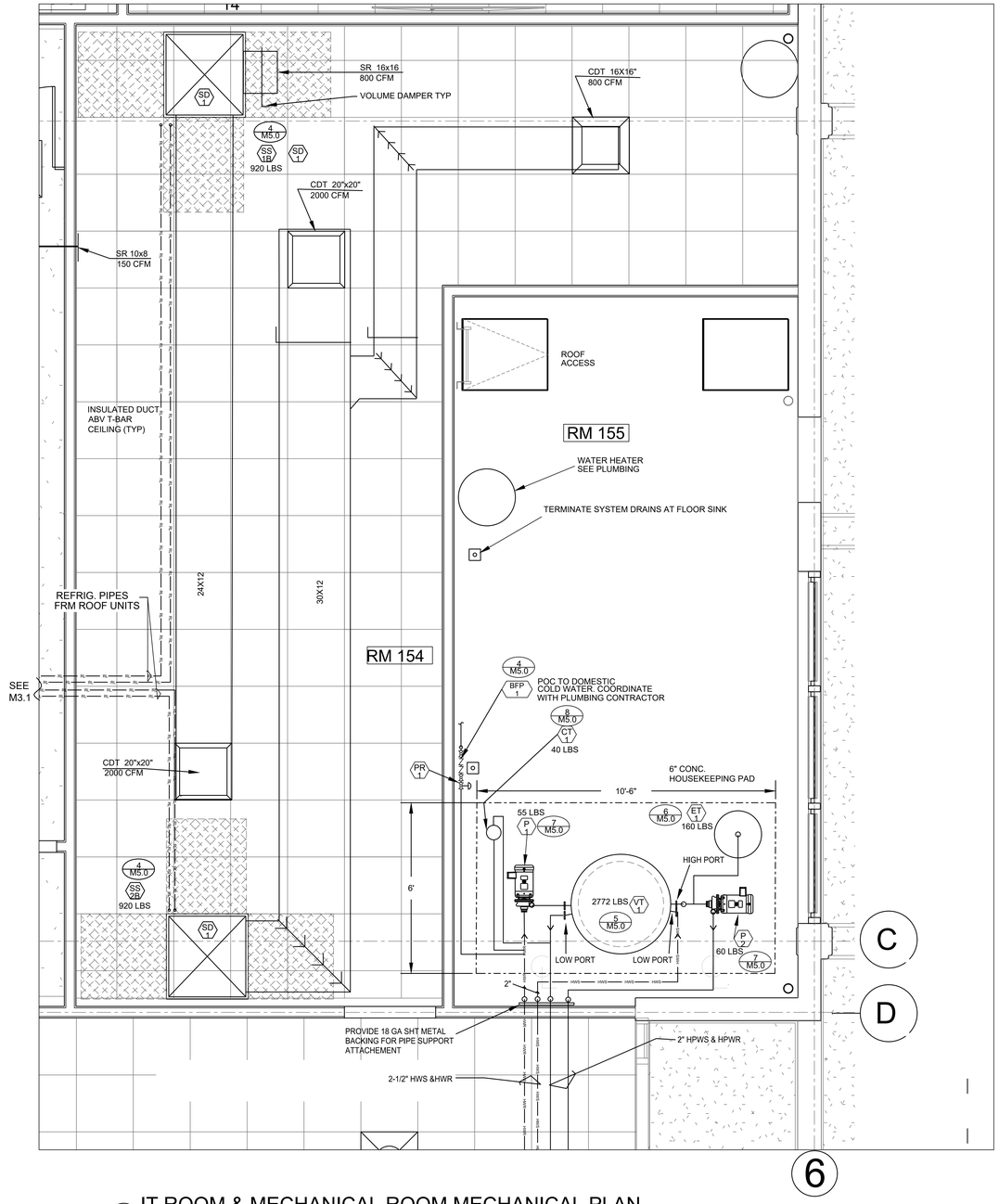

1 IT ROOM & MECHANICAL ROOM MECHANICAL PLAN
1/2" = 1'-0"

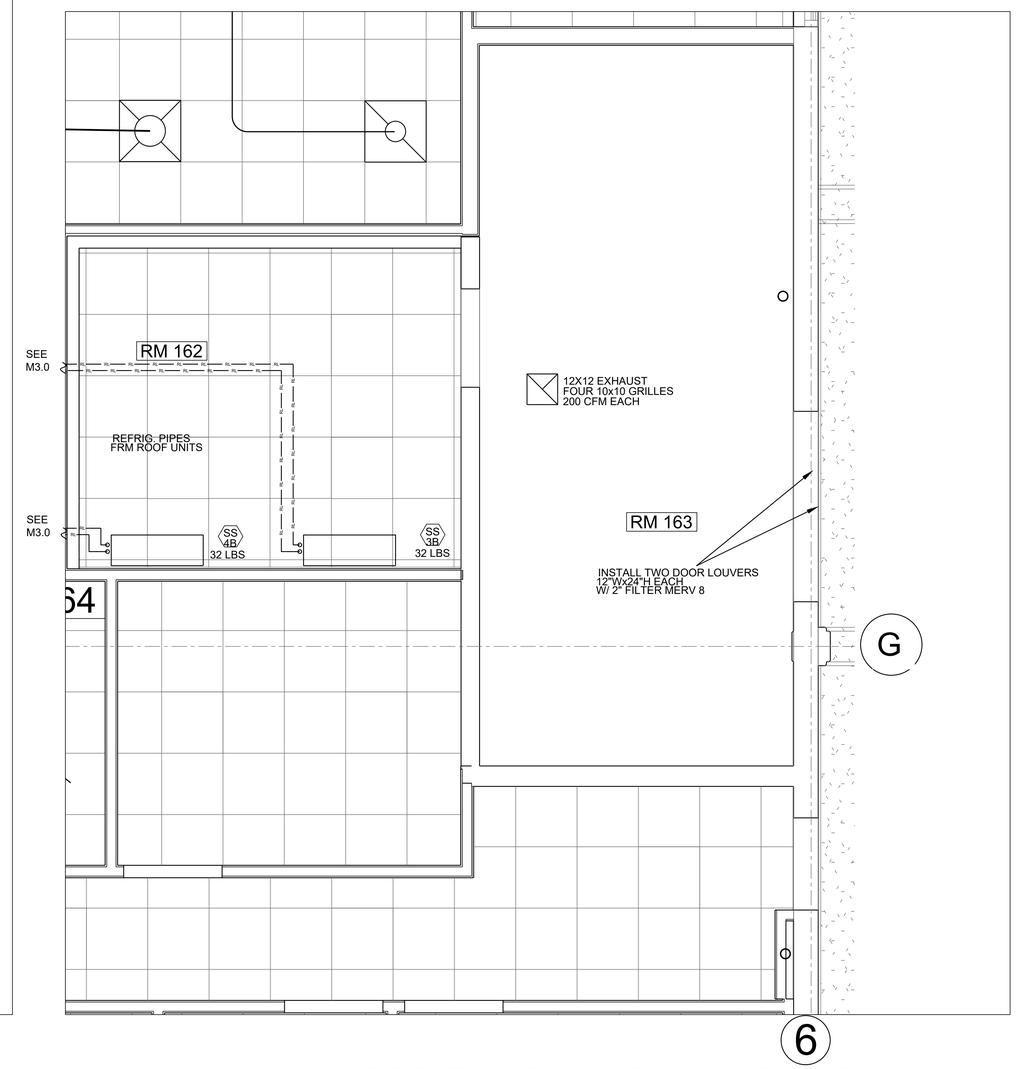

2 PHONE/ELECTRICAL ROOMS MECHANICAL FLOOR PLAN
1/2" = 1'-0"

DIVISION OF THE STATE ARCHITECT

IDENTIFICATION STAMP
DIV. OF THE STATE ARCHITECT
APP: 03-123218 INC:
REVIEWED FOR
SS ☑ FLS ☑ ACS ☑
DATE: 07/11/2024

AMADOR WHITTLE
ARCHITECTS, INC.
28328 AGOURA ROAD, SUITE 203
AGOURA HILLS, CA 91301
(805) 530-3938 , (818) 874-0071

Ventura County Community College

PROJECT TITLE

ADMINISTRATION BUILDING RENOVATION

7075 CAMPUS ROAD
MOORPARK, CA 91320

CONSULTANT

AE Group
Mechanical Engineers
838 East Front Street
Ventura, California 93001-2925
(805) 653-1722
hugh@aegroupme.com

STAMPS/SEALS

REGISTERED PROFESSIONAL ENGINEER
HUGH A. MCTERNAN
M030626
Ren. 6/30/24
MECHANICAL
STATE OF CALIFORNIA

LICENSED ARCHITECT
JEAN ANN AMADOR
C-22205
APRIL 30, 2025
DATE
STATE OF CALIFORNIA

SHEET TITLE:

IT/ELECTRICAL MECHANICAL FLOOR PLAN

PROJECT NO:	PROJECT ARCH:
DRAWN: JS/HM	CHECKED: HM/PW/TP

SHEET NUMBER:

M3.3

DATE: 12/22/23 | SHEET: ___ OF ___

IF THIS SHEET IS NOT 30" X 42", IT IS NOT FULL SIZE, SCALE ACCORDINGLY

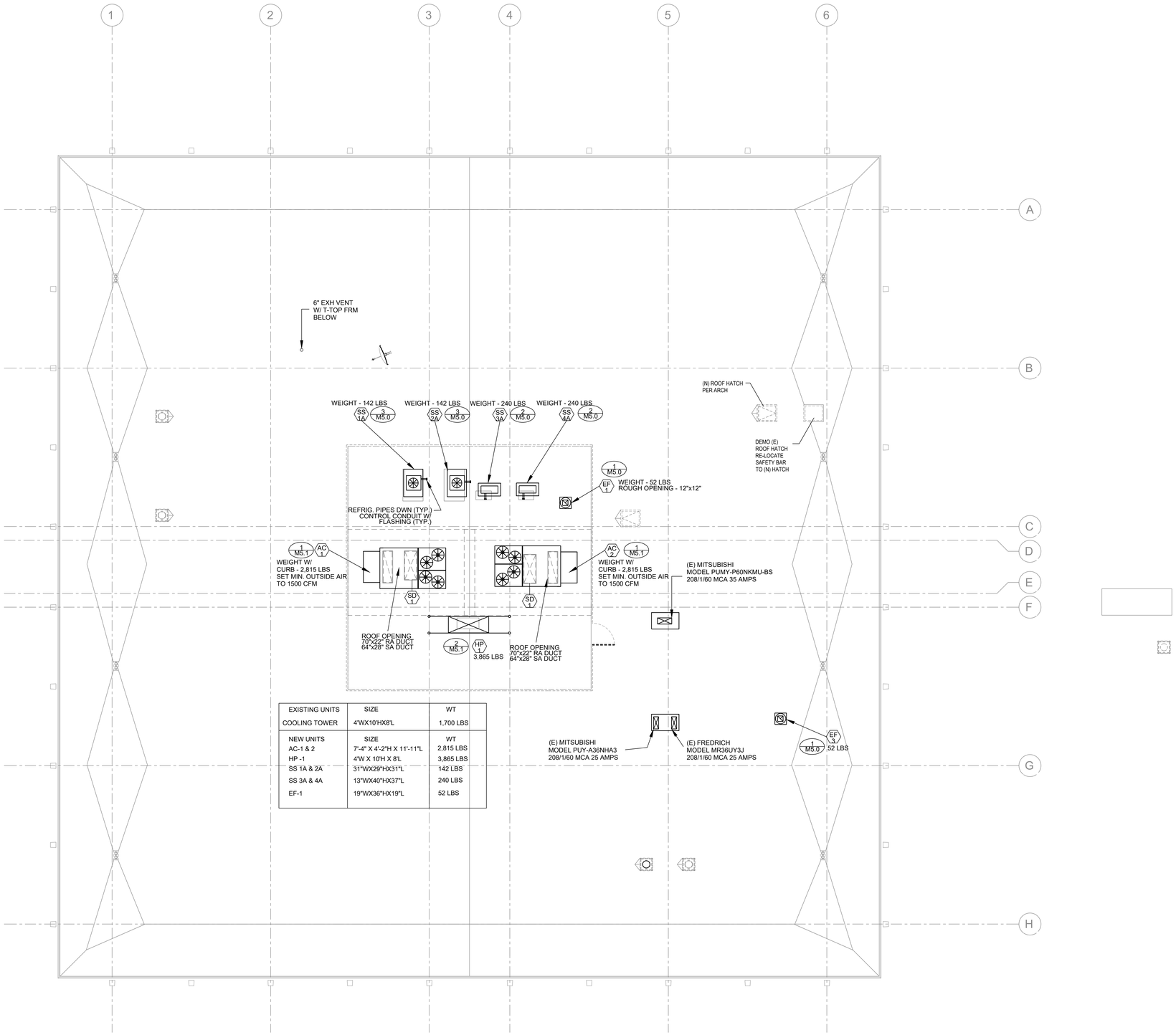

EXISTING UNITS	SIZE	WT
COOLING TOWER	4'WX10'HX8'L	1,700 LBS
NEW UNITS	SIZE	WT
AC-1 & 2	7'-4" X 4'-2"H X 11'-11"L	2,815 LBS
HP -1	4'W X 10'H X 8'L	3,865 LBS
SS 1A & 2A	31"WX29"HX31"L	142 LBS
SS 3A & 4A	13"WX40"HX37"L	240 LBS
EF-1	19"WX36"HX19"L	52 LBS

1 MECHANICAL ROOF PLAN
1/8" = 1'-0"

NORTH

DIVISION OF THE STATE ARCHITECT

IDENTIFICATION STAMP
DIV. OF THE STATE ARCHITECT
APP: 03-123218 INC:
REVIEWED FOR
SS ☑ FLS ☑ ACS ☑
DATE: 07/11/2024

AMADOR WHITTLE
ARCHITECTS, INC.
28328 AGOURA ROAD, SUITE 203
AGOURA HILLS, CA 91301
(805) 530-3938 , (818) 874-0071

Ventura County Community College

PROJECT TITLE

ADMINISTRATION BUILDING RENOVATION

7075 CAMPUS ROAD
MOORPARK, CA 91320

CONSULTANT

AE Group
Mechanical Engineers
838 East Front Street
Ventura, California 93001-2925
(805) 653-1722
hugh@aegroupme.com

STAMPS/SEALS

REGISTERED PROFESSIONAL ENGINEER
HUGH A. McTERNAN
M030626
Ren. 6/30/24
MECHANICAL
STATE OF CALIFORNIA

LICENSED ARCHITECT
JEAN ANN AMADOR
C-22205
APRIL 30, 2025
DATE
STATE OF CALIFORNIA

SHEET TITLE:

MECHANICAL ROOF PLAN

PROJECT NO:	PROJECT ARCH:
DRAWN: JS/HM	CHECKED: HM/PW/TP

SHEET NUMBER:

M4.0

DATE: 12/22/23 | SHEET: ___ OF ___

IF THIS SHEET IS NOT 30" X 42", IT IS NOT FULL SIZE, SCALE ACCORDINGLY

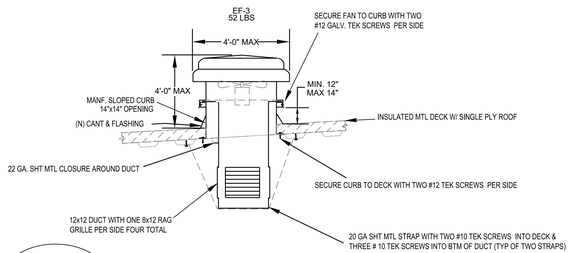

1 / M5.0 EXHAUST FAN 1 & 3 DETAIL
NO SCALE

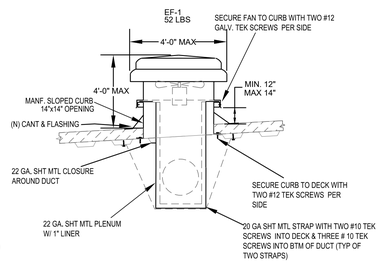

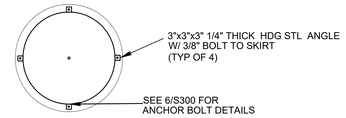

PLAN VIEW

PLAN VIEW

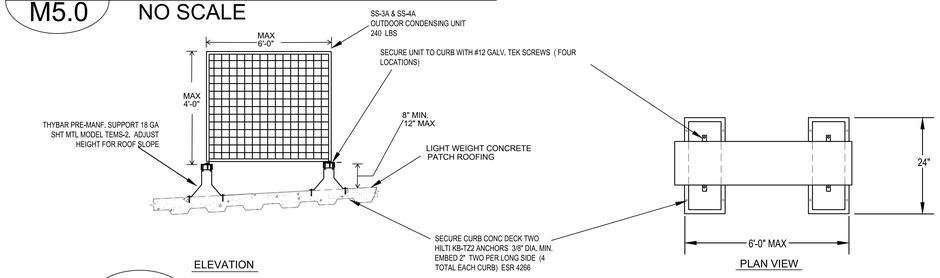

ELEVATION

PLAN VIEW

2 / M5.0 CONDENSING UNIT DETAIL
NO SCALE

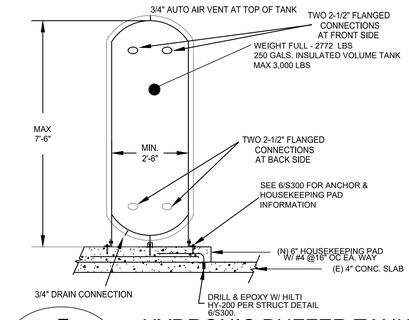

5 / M5.0 HYDRONIC BUFFER TANK ANCHORAGE
SCALE 1/2"=1'0"

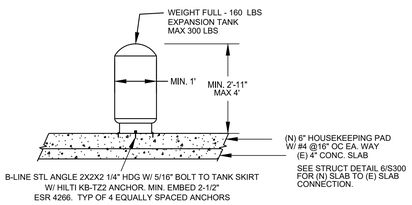

6 / M5.0 EXPANSION TANK ANCHORAGE
SCALE 1/2"=1'0"

FOR MORE INFORMATION ON STRUCTURAL SUPPORT SEE STRUCTURAL PLANS SHEET 33/S022 AND 16/S021

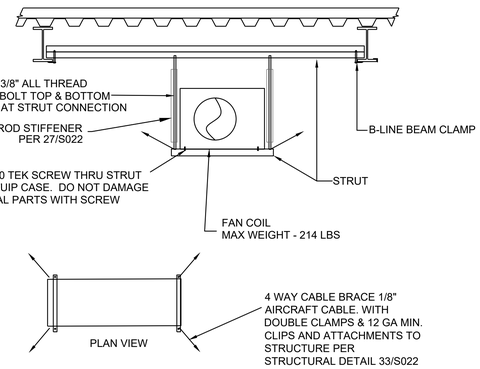

PLAN VIEW

9 / M5.0 VAV BOX SUPPORT DETAIL
SCALE 1/2"=1'0"

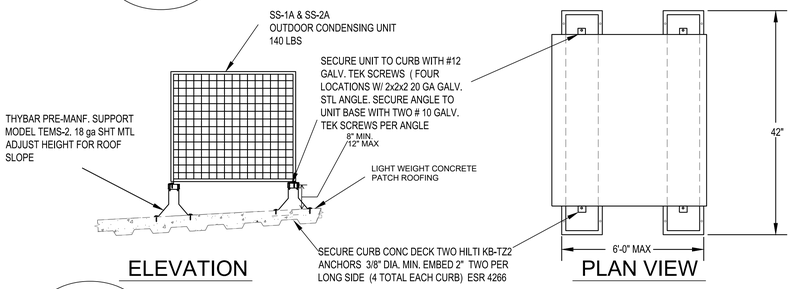

ELEVATION

PLAN VIEW

3 / M5.0 CONDENSING UNIT DETAIL
NO SCALE

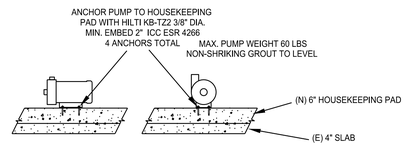

7 / M5.0 PUMP ANCHORAGE
SCALE 1/2"=1'0"

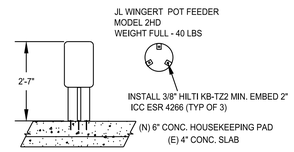

8 / M5.0 CHEMICAL TANK ANCHORAGE
SCALE 1/2"=1'0"

FOR MORE INFORMATION ON ROD STIFFENER SEE STRUCTURAL PLANS SHEET 27/S022

FOR MORE INFORMATION ON STRUCTURAL SUPPORT SEE STRUCTURAL PLANS SHEET 33/S022 AND 16/S021

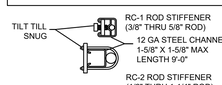

DETAIL C

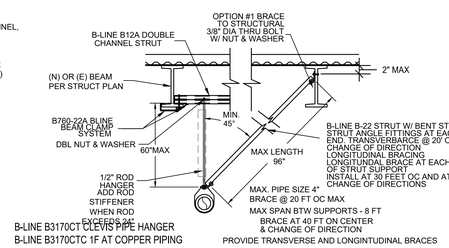

PIPE SUPPORT

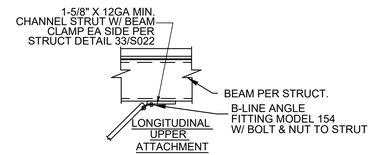

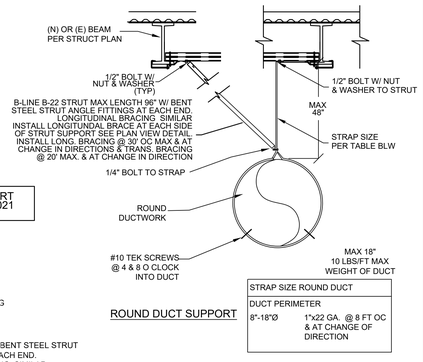

STRAP SIZE ROUND DUCT	
DUCT PERIMETER	
8"-18"Ø	1"x22 GA. @ 8 FT OC & AT CHANGE OF DIRECTION

ROUND DUCT SUPPORT

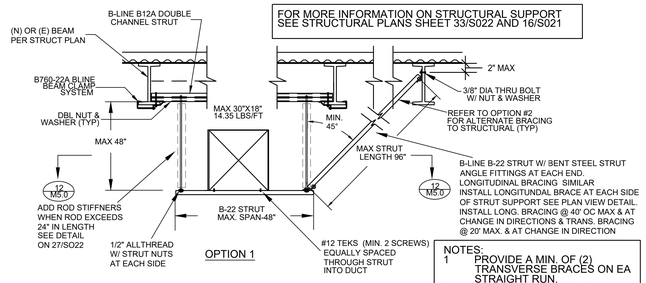

OPTION 1

NOTES:
1 PROVIDE A MIN. OF (2) TRANSVERSE BRACES ON EA STRAIGHT RUN.
2 PROVIDE A MIN. OF (1) LONGITUDINAL BRACE ON EA STRAIGHT RUN

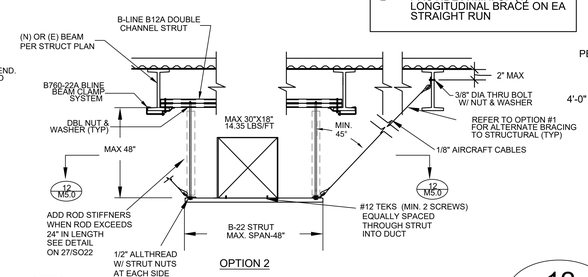

OPTION 2

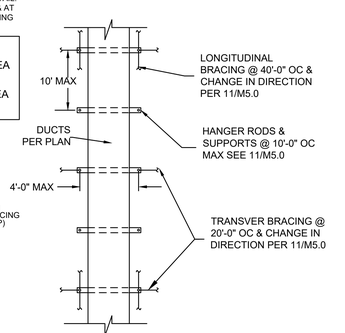

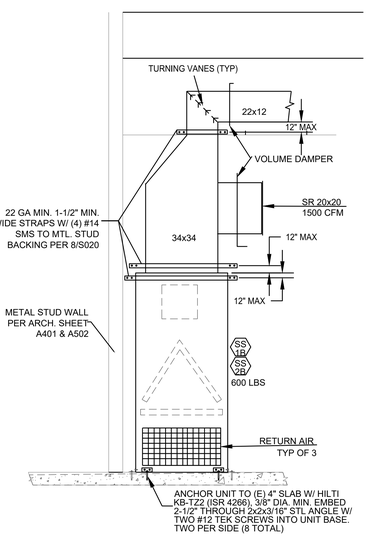

4 / M5.0 IT ROOM INDOOR UNITS
SCALE 1/2"=1'0"

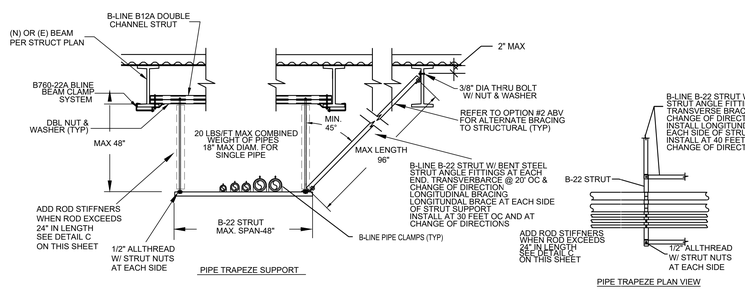

PIPE TRAPEZE SUPPORT

PIPE TRAPEZE PLAN VIEW

10 / M5.0 TYPICAL PIPE SUPPORT DETAILS
SCALE: NO SCALE

11 / M5.0 TYPICAL DUCT SUPPORT DETAILS
SCALE: NO SCALE

12 / M5.0 TYPICAL DUCT SUPPORT & BRACING PLAN VIEW
SCALE: NO SCALE

DIVISION OF THE STATE ARCHITECT
IDENTIFICATION STAMP
DIV. OF THE STATE ARCHITECT
APP: 03-123218 INC:
REVIEWED FOR
SS ☑ FLS ☑ ACS ☑
DATE: 07/11/2024

AMADOR WHITTLE
ARCHITECTS, INC.
28328 AGOURA ROAD, SUITE 203
AGOURA HILLS, CA 91301
(805) 530-3938 , (818) 874-0071

Ventura County Community College

PROJECT TITLE
ADMINISTRATION BUILDING RENOVATION

7075 CAMPUS ROAD
MOORPARK, CA 91320

CONSULTANT

AE Group
Mechanical Engineers
838 East Front Street
Ventura, California 93001-2925
(805) 653-1722
hugh@aegroupme.com

STAMPS/SEALS

REGISTERED PROFESSIONAL ENGINEER HUGH A. McTERNAN M030626 Ren. 6/30/24 MECHANICAL STATE OF CALIFORNIA

LICENSED ARCHITECT BEAN ANN AMADOR C-22205 APRIL 30, 2025 DATE STATE OF CALIFORNIA

SHEET TITLE:

MECHANICAL DETAILS

PROJECT NO:	PROJECT ARCH:
DRAWN: JS/HM	CHECKED: HM/PW/TP

SHEET NUMBER:

M5.0

DATE: 12/22/23 SHEET: ___ OF ___

IF THIS SHEET IS NOT 30" X 42", IT IS NOT FULL SIZE, SCALE ACCORDINGLY

For wood, concrete and steel attachment see Roof Anchorage Detail, Form No. CB-62.

Welded Isolation springs housingare standard. For bolted spring housing, neoprene pads and spring cups see Weldment and Bolting Detail, Form No. CB-61

VIBRATION ISOLATION ROOF CURBS SUNCHOICE UNITS

AV 20-25

PROVENT P/N	A	B	EST. WEIGHT
CBISCSAV202518**	8"	18"	615 Lbs
CBISCSAV202521**	11"	21"	660 Lbs
CBISCSAV202524**	14"	24"	710 Lbs

**Note: Spring configuration must be added to part number at time of order

Meets seismic requirements for the following codes:
CBC 2019
IBC 2018

FEATURES

- Roof curb base 12 ga.
- Roof curb upper rail 14 ga.
- Fully welded construction.
- Gasketing package provided.
- Heat treated wood nailer provided.
- insulated deck pans provided.
- Pitched curbs and taller curbs are available.
- CalDys OSHPd pre-approved seismic restraints. (OPM-0401-13), (CQA).

NOTES

- Attach ductwork to roof curb. Flanges of duct rest on top of the curb. Support ductwork below the curb.
- Thru the curb utilities are available. Contact you York distributor or Provent directly.

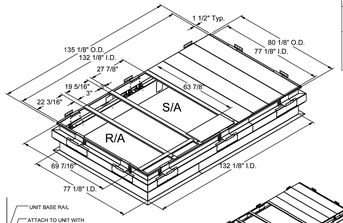

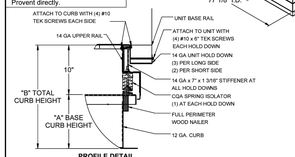

PROFILE DETAIL

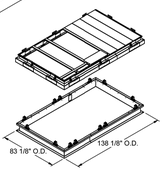

REGISTERED PROFESSIONAL ENGINEER GLEN A. MORITZ SE 3578 Exp. 6/30/23 STRUCTURAL STATE OF CALIFORNIA

ProVent

3847 WABASH DRIVE
MIRA LOMA, CA 91752

PHONE (951) 685-1101
FAX (619) 872-9799

SUBMITTED TO:
COMPANY:
JOB NAME:
EQUIPMENT:
NOTES:

FORM NO:	PART NUMBER:	
CBISC-13	CBISCSAV2025 SERIES	
DATE: 4/20/2022	REV: 1	DRAWN BY: FMM

WELDMENT AND BOLTING DETAIL

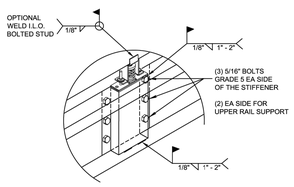

BASE CURB SUPPORT

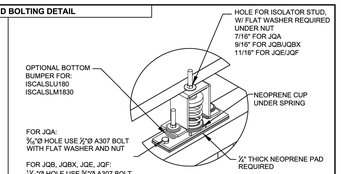

FOR BOLT ON ISOLATORS

REGISTERED PROFESSIONAL ENGINEER GLEN A. MORITZ SE 3578 Exp. 6/30/23 STRUCTURAL STATE OF CALIFORNIA

ProVent

3847 WABASH DRIVE
MIRA LOMA, CA 91725

PHONE (951) 685-1101
FAX (619) 872-9799

SUBMITTED TO:
COMPANY:
JOB NAME:
EQUIPMENT:
NOTES:

FORM NO:		
CB-61		
DATE: 02/08/18	REV: 1	DRAWN BY: ALL

1 M5.1 AC UNIT ISOLATION CURB
NO SCALE

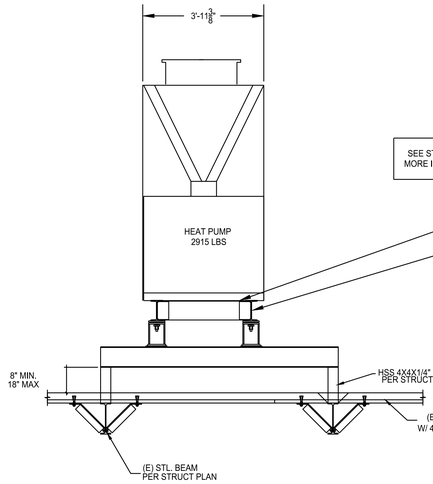

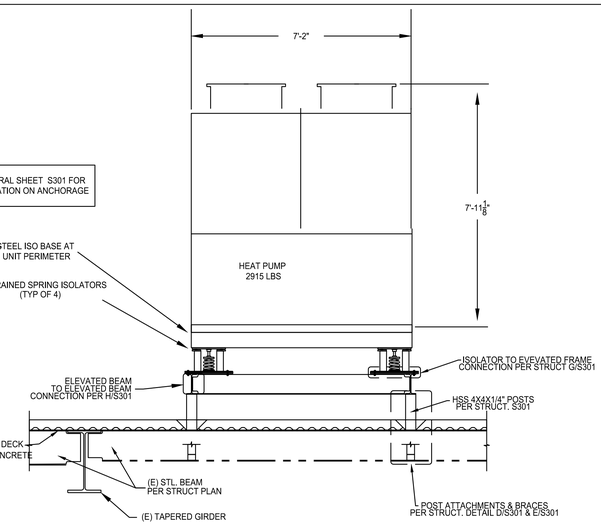

2 M5.1 HEAT PUMP SUPPORT DETAIL
SCALE: 1/2"=1'0"

UNIT: MULTISTACK ARP030L

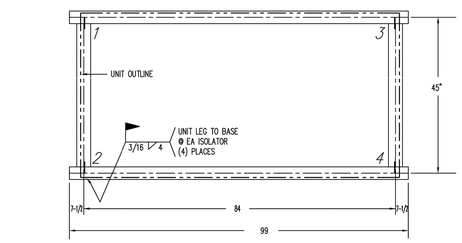

REGISTERED PROFESSIONAL ENGINEER AMADOR G. TIONGSON SE 59481 Exp. 10/31/25 STRUCTURAL STATE OF CALIFORNIA
10/31/2023

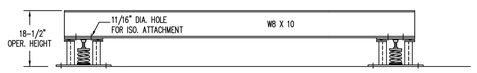

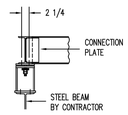

NOTE(S): 1. APPROXIMATE STEEL & ISOLATORS WEIGHT = 950 LBS.
2. FOR ISOLATOR DETAILS, SEE DWG -2.1
3. M.W. SAUSSE & CO. INC. IS NOT RESPONSIBLE FOR THE STRUCTURAL INTEGRITY OF THE EQUIPMENT WHEN ANCHORED AS SHOWN.

M.W. SAUSSE' & CO., INC. VALENCIA, CALIFORNIA 91355 VIBREX TYPE RMLS-SB-EQ	JOB NAME: MOORPARK COLLEGE ADMIN	REVISIONS:	DRN: JO
	CUST.:	A:	DATE: 3/25/22
	CUST. P.O.:		SHEET NO.:
	MECH. ENGR.: AEG		-2
	MARK: WHP		

MTS.	SPRING OD.	DEFLN.
1-4	4.0"	2"

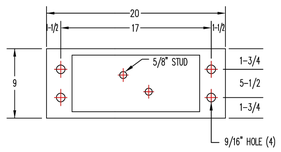

PLAN VIEW

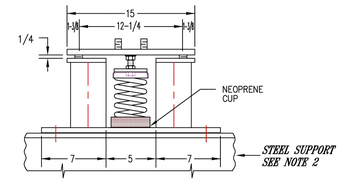

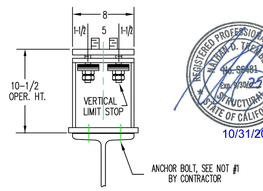

REGISTERED PROFESSIONAL ENGINEER AMADOR G. TIONGSON SE 59481 Exp. 10/31/25 STRUCTURAL STATE OF CALIFORNIA
10/31/2023

NOTES: 1. FOR ISOLATOR ANCHORAGE, USE 1/2" DIA. A-307 MACHINE BOLT
2. ADEQUACY OF STRUCTURAL SUPPORT MUST BE VERIFIED BY OTHERS.
3. M.W. SAUSSE & CO. INC. IS NOT RESPONSIBLE FOR THE STRUCTURAL INTEGRITY OF THE EQUIPMENT WHEN ANCHORED AS SHOWN.

M. W. SAUSSÉ & CO., INC. 28744 Whitherspoon Pkwy, Valencia, CA 91355 Phone: (661) 257-3311 Fax: (661) 257-7673 Vibrex RMLS-EQ-12	JOB NAME: MOORPARK COLLEGE ADMIN	REVISIONS:	DRN: JO
	CUST.:	A:	DATE: 3/25/22
	CUST. P.O.:	B:	SHEET NO.:
	MECH. ENGR.: AEG	C:	-2.1
	MARK: WHP	D:	

3 M5.1 HEAT PUMP ISOLATION CURB
NO SCALE

DIVISION OF THE STATE ARCHITECT

IDENTIFICATION STAMP
DIV. OF THE STATE ARCHITECT
APP: 03-123218 INC:
REVIEWED FOR
SS ☑ FLS ☑ ACS ☑
DATE: 07/11/2024

AMADOR WHITTLE
ARCHITECTS, INC.
28328 AGOURA ROAD, SUITE 203
AGOURA HILLS, CA 91301
(805) 530-3938 , (818) 874-0071

Ventura County Community College

PROJECT TITLE

ADMINISTRATION BUILDING RENOVATION

7075 CAMPUS ROAD
MOORPARK, CA 91320

CONSULTANT

AE Group
Mechanical Engineers
838 East Front Street
Ventura, California 93001-2925
(805) 653-1722
hugh@aegroupme.com

STAMPS/SEALS

REGISTERED PROFESSIONAL ENGINEER HUGH A. McTERNAN M030626 Ren. 6/30/24 MECHANICAL STATE OF CALIFORNIA

LICENSED ARCHITECT JEAN ANN AMADOR C-22205 APRIL 30, 2025 DATE STATE OF CALIFORNIA

SHEET TITLE:

MECHANICAL DETAILS

PROJECT NO.:	PROJECT ARCH:
DRAWN: JS/HM	CHECKED: HM/PM/TP

SHEET NUMBER:

M5.1

DATE: 12/22/23 SHEET: ___ OF ___

IF THIS SHEET IS NOT 30" X 42", IT IS NOT FULL SIZE, SCALE ACCORDINGLY

AC-1 & AC-2

CM 1

BACNET MSTP CONNECTION

INPUTS

SUPPLY AIR TEMP
RETURN AIR TEMP
MIXED AIR TEMP
OUTSIDE AIR TEMP AND HUMIDITY
UNIT ALARMS

COMPRESSOR STATUS

DUCT PRESSURE (COORDINATE WITH AIR BALANCE CONTRACTOR
FIRE ALARM SIGNAL FOR UNIT SHUTDOWN

OUTPUTS

INDOOR UNIT FAN SPEED

ECONOMIZER CONTROL TO MAINTAIN CO2 SETPOINT IN ANY ZONE.

HEAT PUMP HP-1

BACNET MSTP CONNECTION

INPUTS

SUPPLY WATER TEMPERATURE
RETURN WATER TEMPERATURE
UNIT STATUS

CM 5

OUTPUTS

ENABLE HEAT PUMP
WATER TEMPERATURE SETPOINT
UNIT IS CONTROLLED BY ON-BOARD LOGIC AND CONTROLLERS

P-1

INPUTS

CURRENT SENSOR

OUTPUTS

MOTOR CONTACTOR IN NEMA 12 ENCLOSURE

P-2

INPUTS

PRESSURE SENSOR
VFD STATUS
VFD ALARM

OUTPUTS

VFD ENABLE
VFD SPEED

VAV (TYP OF 44)

CM 2

T 1

INPUTS

THERMOSTAT
AIR FLOW
SUPPLY AIR TEMPERATURE

OUTPUTS

DAMPER POSITION
VALVE POSITION

EXTERIOR LIGHTS

CM 3

OUTPUTS

3 ZONES (3 DISCRETE OUTPUTS TO CONTACTOR)
PROVIDE IDEC ICE CUBE ISOLATION RELAYS 24V COIL
WITH LOW VOLTAGE WIRING/CONDUIT AND ENCLOSURE
COORDINATE WITH ELECTRICAL CONTRACTOR

MISC. CONTROLS

CM 4

INPUT

EF 1 FAN PROOFING
DOMESTIC HOT WATER TEMPERATURE

OUTPUTS

EF-1
PROVIDE IDEC ICE CUBE ISOLATION RELAYS 24V COIL
WITH LOW VOLTAGE WIRING/CONDUIT AND ENCLOSURE
COORDINATE WITH ELECTRICAL CONTRACTOR
24 VOLT COIL 2 POLE MOTOR CONTACTOR IN ENCLOSURE

EF-3
PROVIDE IDEC ICE CUBE ISOLATION RELAYS 24V COIL
WITH LOW VOLTAGE WIRING/CONDUIT AND ENCLOSURE
COORDINATE WITH ELECTRICAL CONTRACTOR
24 VOLT COIL 2 POLE MOTOR CONTACTOR IN ENCLOSURE

WH-1
PROVIDE IDEC ICE CUBE ISOLATION RELAYS 24V COIL
WITH LOW VOLTAGE WIRING/CONDUIT AND ENCLOSURE
COORDINATE WITH ELECTRICAL CONTRACTOR
40 AMP 2 POLE MOTOR CONTACTOR IN ENCLOSURE

RP-1
PROVIDE IDEC ICE CUBE ISOLATION RELAYS 24V COIL
WITH LOW VOLTAGE WIRING/CONDUIT AND ENCLOSURE
24 VOLT 15 AMP MOTOR CONTRACTOR IN ENCLOSURE

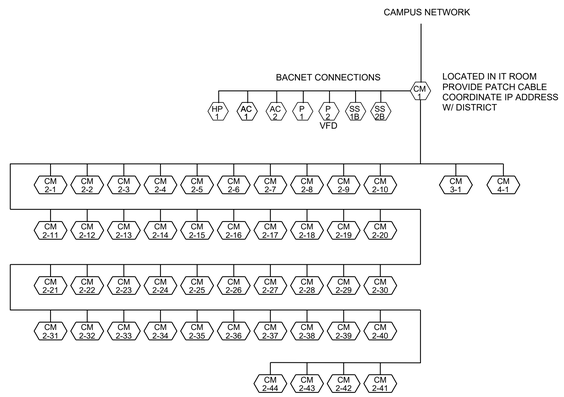

CONTROL SCHEDULE

CM 1	CONTROL MODULE. AUTOMATED LOGIC G5CE BACNET AND WEBCTRL ROUTER
CM 2	CONTROL MODULE. ALC OPTIFLEX OF342-E2 VAV CONTROLLER WITH ACTUATOR. ASHRAE GUIDELINE 36-2021 COMPLIANT
CM 3	CONTROL MODULE. ALC Z SERIES FOR EXTERIOR LIGHTING CONTROL. HARDWIRED POINTS TO POWERLINK PANEL AT ELECTRICAL ROOM
CM 4	CONTROL MODULE. ALC Z MODULE EXHAUST FAN AND WATER HEATER CONTROL
CM 5	CONTROL MODULE. ALC SE MODULE PUMP AND HEAT PUMP CONTROLLER
T 1	THERMOSTAT. ALC MODEL ZS PRO W/ SETPOINT ADJUSTMENT & TIMED LOCAL OVERRIDE CO2 SENSOR
T 2	THERMOSTAT. ALC WALL PLATE SENSOR
PX 1	DIFF. PRESSURE TRANSMITTER - 0-5VDC OUTPUT, FOR FAN SPEED CONTROL DWYER 604A OR VERIS IND.
CV 1	CONTROL VALVE - 2-WAY VALVE (SEE M1.1) WITH AN ELECTRONIC ACTUATOR WITH EITHER 0-5VDC OR 4-20mA COMMAND SIGNAL. VALVE AND ACTUATOR SHALL BE BELIMO.
PS 1	H20 DIFF. PRESSURE TRANSMITTER - 4-20ma OUTPUT, FOR SYSTEM PRESSURE CONTROL PROVIDE ISOLATION VALVE AT CONNECTION TO PIPING. DWYER INSTRUMENTS 634-E-1
FA 1	FIRE ALARM SHUTDOWN. COORDINATE WITH FIRE ALARM CONTRACTOR FOR UNIT SHUTDOWN UPON FIRE ALARM. PROVIDE ANY NEEDED INPUT POINTS OR RELAYS. USE EMERGENCY STOP CONTACTS AT VFD

CONTROL SEQUENCE

1. UNITS SHALL OPERATE BASED ON SCHEDULE PROVIDED BY OWNER
2. HYDRONIC HEAT PUMP SYSTEM SHALL OPERATE WHEN OUTSIDE AIR IS BELOW 72 F (ADJ).
3. SYSTEM SEQUENCE SHALL BE BASED ON ASHRAE GUIDELINE 36-2021 HIGH PERFORMANCE SEQUENCES OF OPERATION OF HVAC SYSTEMS.

DEFAULT SETPOINTS	OCCUPIED HEATING	OCCUPIED COOLING	UNOCCUPIED HEATING	UNOCCUPIED COOLING	
VAV	70 F	75 F	60 F	85 F	
NETWORKING/COMPUTER ROOM	65 F	75 F	65 F	75 F	RELATIVE HUMIDITY 30-40%

CO2 SETPOINTS MAXIMUM 1000 PPM
MINIMUM COOLING SETPOINT 55 F (ADJ)
MAXIMUM COOLING SETPOINT 65 F (ADJ)

AC-1 & 2 MINIMUM OUTSIDE AIR 1500 CFM

ECONOMIZER CONTROL DUAL ENTHALPY IN AC UNIT.

MINIMUM HOT WATER SETPOINT 125 F
MAXIMUM HOT WATER SETPOINT 145 F
HOT WATER SYSTEM LOCKOUT > 72 F

SUPPLY DUCT PRESSURE SETPOINT SHALL BE BASED ON AIR BALANCE
TO PROVIDE LISTED MAXIMUM CFM WITH ALL BOXES 100 % OPEN.
FAN SHALL MODULATE TO MAINTAIN THIS PRESSURE AS VAV DAMPERS OPEN AND CLOSE.

HYDRONIC SYSTEM PRESSURE SETPOINT SHALL BE BASED ON HYDRONIC
BALANCE TO PROVIDE 100% FLOW TO ALL VAV COILS

PUMP P1 AND HEAT PUMP SHALL BE ON BASED ON SCHEDULE AND OUTSIDE AIR TEMP BELOW 67 F (ADJ)

PUMP P2 SHALL MODULATE TO MAINTAIN HYDRONIC SYSTEM PRESSURE.

EXTERIOR LIGHTS AND MISC. EQUIPMENT SHALL OPERATE BASED ON A SCHEDULE
PROVIDED BY OWNER.

REQUEST VIA RFI FOR IP ADDRESS TO CONNECT CONTROL SYSTEM TO NETWORK

REQUEST VIA RFI FOR IP ADDRESS TO CONNECT CONTROL SYSTEM TO NETWORK

ONE HOUR PRIOR TO OCCUPANCY SYSTEM WILL FLUSH THE BUILDING WITH HEATING AND
AND COOLING ENABLE.

IF OUTSIDE AIR TEMPERATURE IS BELOW 55 F ADJUSTABLE GAS HEAT WILL BE ENABLED FOR
FOR MORNING WARM-UP DURING BUILDING FLUSH.

DIVISION OF THE STATE ARCHITECT

IDENTIFICATION STAMP
DIV. OF THE STATE ARCHITECT
APP: 03-123218 INC:
REVIEWED FOR
SS ☑ FLS ☑ ACS ☑
DATE: 07/11/2024

AMADOR WHITTLE
ARCHITECTS, INC.
28328 AGOURA ROAD, SUITE 203
AGOURA HILLS, CA 91301
(805) 530-3938 , (818) 874-0071

Ventura County Community College

PROJECT TITLE

ADMINISTRATION BUILDING RENOVATION

7075 CAMPUS ROAD
MOORPARK, CA 91320

CONSULTANT

AE Group
Mechanical Engineers
838 East Front Street
Ventura, California 93001-2925
(805) 653-1722
hugh@aegroupme.com

STAMPS/SEALS

REGISTERED PROFESSIONAL ENGINEER
HUGH A. McTERNAN
M030626
Ren. 6/30/24
MECHANICAL
STATE OF CALIFORNIA

LICENSED ARCHITECT
JEAN ANN AMADOR
C-22203
APRIL 30, 2025
DATE
STATE OF CALIFORNIA

SHEET TITLE:

CONTROL & HYDRONIC DIAGRAM

PROJECT NO.:
PROJECT ARCH.:
DRAWN: JS/HM
CHECKED: HM/PW/TP

SHEET NUMBER:

M6.0

DATE: 12/22/23
SHEET: ____ OF ____

IF THIS SHEET IS NOT 30" X 42", IT IS NOT FULL SIZE, SCALE ACCORDINGLY

This document is used to demonstrate compliance for mechanical systems that are within the scope of the permit application and are demonstrating compliance using the prescriptive path outlined in 140.4, or 141.0(b)2 for alterations.

Project Name:	Moorpark Colllege Administration Building Renovation	**Report Page:**	**(Page 1 of 11)**
Project Address:	7075 Campus Road	**Date Prepared:**	4/17/2023

A. GENERAL INFORMATION

01	Project Location (city)	Moorpark	04	Total Conditioned Floor Area	16900
02	Climate Zone	9	05	Total Unconditioned Floor Area	0
03	Occupancy Types Within Project:		06	# of Stories (Habitable Above Grade)	1

● Office ● Support Areas

B. PROJECT SCOPE

This table Includes mechanical systems or components that are within the scope of the permit application and are demonstrating compliance using the prescriptive path outlined in 140.4, 170.2(b) or 141.0(b)2 and 180.2(b)2 for alterations.

01	02	03
Air System(s)	Wet System Components	Dry System Components
☒ Heating Air System	☐ Water Economizer	☒ Air Economizer
☒ Cooling Air System	☒ Pumps	☐ Electric Resistance Heat
Mechanical Controls	☐ System Piping	☒ Fan Systems
☒ Mechanical Controls (existing to remain, altered or new)	☐ Cooling Towers	☒ Ductwork (existing to remain, altered or new)
	☐ Chillers	☒ Ventilation
	☒ Boilers	☐ Zonal Systems/ Terminal Boxes

Project Name:	Moorpark Colllege Administration Building Renovation	**Report Page:**	**(Page 2 of 11)**
Project Address:	7075 Campus Road	**Date Prepared:**	4/17/2023

C. COMPLIANCE RESULTS

Table C will indicate if the project data input into the compliance document is compliant with mechanical requirements. This table is not editable by the user. If this table says "DOES NOT COMPLY" or "COMPLIES with Exceptional Conditions" refer to Table D., or the table indicated as not compliant for guidance.

01		02		03		04		05		06		07		08	09
System Summary 110.1, 110.2, 140.4, 170.2(c)	AND	Pumps 140.4(k), 170.2(c)4I	AND	Fans/ Economizers 140.4(c), 140.4(e), 170.2(c)	AND	System Controls 110.2, 120.2, 140.4(f), 170.2(c)	AND	Ventilation 120.1, 160.2	AND	Terminal Box Controls 140.4(d), 170.2(c)4B	AND	Distribution 120.3, 140.4(l), 160.2, 160.3	AND	Cooling Towers 110.2(e)2	Compliance Results
(See Table F)		(See Table G)		(See Table H)		(See Table I)		(See Table J)		(See Table K)		(See Table L)		(See Table M)	
Yes	AND	Yes	AND	Yes	AND	Yes	AND	Yes	AND		AND	Yes	AND		COMPLIES
Mandatory Measures Compliance (See Table Q for Details)															COMPLIES

D. EXCEPTIONAL CONDITIONS

This table is auto-filled with uneditable comments because of selections made or data entered in tables throughout the form.

E. ADDITIONAL REMARKS

This table includes remarks made by the permit applicant to the Authority Having Jurisdiction.

F. HVAC SYSTEM SUMMARY (DRY & WET SYSTEMS)

Space Conditioning System Information

01	02	03	04	05	06
System Name	Quantity	System Serving	System Status	Space Type	Utilizing Recovered Heat
HP-1 & 2	2	Single zone	Alteration		☐

Project Name:	Moorpark Colllege Administration Building Renovation	**Report Page:**	**(Page 3 of 11)**
Project Address:	7075 Campus Road	**Date Prepared:**	4/17/2023

F. HVAC SYSTEM SUMMARY (DRY & WET SYSTEMS)

Dry System Equipment Sizing (includes air conditioners, condensers, heat pumps, VRF, furnaces and unit heaters and DOAS systems)

01	02	03	04	05	06	07	08	09	10	11
Name or Item Tag	Equipment Category per Tables 110.2, 140.4(a)2 and 170.2(c)3aii	Equipment Type per Tables 110.2 and Title 20	Smallest Size Available[1] 140.4(a) and 170.2(c)1	Equipment Sizing per Mechanical Schedule (kBtu/h) 140.4(a&b), 170.2(c)1 & 170.2(c)2						
				Heating Output[2,3]			Cooling Output[2,3]		Load Calculations[3,4]	
				Per Design (kBtu/h)	Rated (kBtu/h)	Supp. Heating Output (kBtu/h)	Sensible Per Design (kBtu/h)	Rated (kBtu/h)	Total Heating Load (kBtu/h)	Total Sensible Cooling Load (kBtu/h)
HP-1 & 2	Unitary AC/ Condensers	AC, air-cooled pkg (3 phase)	NA: Altered per 141.0(b)2E and 180.2(b)2	356	178	0	401.25	200	281.41	436.14

[1]FOOTNOTES: Equipment shall be the smallest size, within the available options of the desired equipment line, necessary to meet the design heating and cooling loads of the building per 140.4(a) and 170.2(c)1. Healthcare facilities are excepted.
[2]It is common practice to show rated output capacity on the equipment schedule. Sensible cooling output comes from specification sheet tables.
[3] If equipment is heating only, leave cooling output and load blank. If equipment is cooling only, leave heating output and load blank.
[4] Authority Having Jurisdiction may ask for load calculations used for compliance per 140.4(b) and 170.2(c).

Dry System Equipment Efficiency (other than Package Terminal Air Conditioners (PTAC) and Package Terminal Heat Pumps (PTHP), DX-DOAS and Dual Fuel Heat Pumps)

01	02	03	04	05	06	07	08	09
		Heating Mode				Cooling Mode		
Name or Item Tag	Size Category (Btu/h)	Rating Condition (°F)	Efficiency Unit	Minimum Efficiency Required per Tables 110.2 / Title 20	Design Efficiency	Efficiency Unit	Minimum Efficiency Required per Tables 110.2 / Title 20	Design Efficiency
HP-1 & 2	>=135,000 and <240,000		AFUE	0.8	0.81	EER IEER	10.8 14	11 12.4

Boiler System Serving		16900							
01	02	03	04	05	06	07	08	09	10

Project Name:	Moorpark Colllege Administration Building Renovation	**Report Page:**	**(Page 4 of 11)**
Project Address:	7075 Campus Road	**Date Prepared:**	4/17/2023

F. HVAC SYSTEM SUMMARY (DRY & WET SYSTEMS)

Boiler Name or Item Tag	Equipment Type[1]	Qty	Rated Input Capacity (Btu/h)[2,3]	Rated Efficiency	Minimum Efficiency Required per 110.2	Efficiency Unit	Boiler Controls per 140.4(k), 170.2(c)liii		High Capacity Boiler Exceptions
							Isolation Valve	Temperature Reset	
Multistack ARA-30L	Hot Water, Gas-Fired	2	258,000	0.82	0.82	AFUE	Yes	NA: <=500,00 Btu/h	No Exceptions Apply
System Efficiency			0.82	Minimum System Efficiency Required per Tables 110.2 / Title 20					

[1]FOOTNOTES: Use NRCC-PLB to document compliance with domestic hot water and service water heating systems.
[2]Maximum capacity- minimum and maximum ratings as provided for and allowed by the unit's controls
[3] Includes oil-fired (residual)

G. PUMPS

This table is used to demonstrate compliance with Prescriptive hydronic system requirements found in 140.4(k) 170.2(c)4I applicable to pumps < 5hp.

01	02	03	04	05	06	07	08
Name or Item Tag	Equipment Type	Qty	HP	Controls per 140.4(k) & 170.2(c)4I			
				Variable Flow	Hydronic Heat Pump Isolation	VSD on Pumps > 5HP	Differential Pressure Sensor
HW	Primary heating hot water	2	0.5	NA: <=3 control valves	NA: No hydronic heat pump	NA: Not serving variable flow system	
CW	Condenser water	2	1.5	NA: <=3 control valves	Yes	NA: Not serving variable flow system	

Project Name:	Moorpark Colllege Administration Building Renovation	**Report Page:**	**(Page 5 of 11)**
Project Address:	7075 Campus Road	**Date Prepared:**	4/17/2023

H. FAN SYSTEMS & AIR ECONOMIZERS

This table is used to demonstrate compliance with prescriptive requirements found in 140.4(c), 140.4(e), 140.4(m), 170.2(c)3, and 170.2(c)4A for fan systems. Fan systems serving only process loads are exempt from these requirements and do not need to be included in Table H.

System Name	HP-1 & 2	Quantity	2	Fan System Status	Alteration	System Zoning	all other systems	Serving Dwelling Units	Not Serving Dwelling Units	Fan System Airflow (cfm)	14,000	Site Elevation	513	Economizer	Differential Temperature

01	02	03	04	05	06	07	08	09	10	11
						Allowance		Design		
Fan Name or Item Tag	Fan Type	Qty	Component	Airflow through Component (%)	Water Gauge (w.g)	Component Allowance	Fan Allowance (watt/cfm)[3]	Design Electrical Input Power Method	Motor Nameplate Horsepower	Design Electrical Input Power (kW)
SF	Supply	2	Base Allowance for system serving spaces <=6 floors away	7,000		1,792		Manufacturer provided		0.87
			MERV 13-16 Filter upstream of thermal conditioning equipment	7,000		840				
			Gas heat	7,000		420				
			Hydronic/DX cooling coil or heat pump coil	7,000		840				
			Economizer Return Damper	7,000		280				
			Supply Fan System	7,000		840				
				Fan System Allowance (kW)[3]		10.02		Fan System Electrical Output (kW)		1.74

[1] FOOTNOTES: Fans serving spaces with design background noise goals below NC35
[2] Low-turndown single-zone VAV fan system must be capable of and configured to reduce airflow to 50 percent of design airflow and use no more than 30 percent of the design wattage at that airflow. No more than 10 percent of the design load served by the equipment shall have fixed loads.

H. EXHAUST AIR HEAT RECOVERY 140.4(q), 170.2(c)4O

01	02	03	04	05	06	07	08	09	10	11

Project Name:	Moorpark Colllege Administration Building Renovation	**Report Page:**	**(Page 6 of 11)**
Project Address:	7075 Campus Road	**Date Prepared:**	4/17/2023

H. EXHAUST AIR HEAT RECOVERY 140.4(q), 170.2(c)4O

Fan System Name	Qty	Hours of Operation per Year	Design Supply Airflow Rate	Outdoor Airflow	% Outdoor Air at Full Design Airflow	Exemptions to Exhaust Air Heat Recovery Requirement per 140.4(q) & 170.2(c)4O	Exhaust Air Heat Recovery 140.4(q) & 170.2(c)4O	Type Of Heat Recovery Rating	Required Recovery Ratio	Energy Recovery Bypass

Fan Energy Index (FEI)

01	02	03
Name or Item Tag	FEI Exception	FEI

I. SYSTEM CONTROLS

This table is used to demonstrate compliance with mandatory controls in 110.2 and 120.2 and prescriptive controls in 140.4(f) and (n), 170.2(c)4D 170.2(c)4L or requirements in 141.0(b)2E 180.2(b)2 for altered space conditioning systems.

01	02	03	04	05	06	07	08	09
System Name	System Zoning	Conditioned Floor Area Being Served (ft^2)	Thermostats 110.2(b) & (c)[1], 120.2(a) 160.3(a)2A or 141.0(b)2E & 180.2(b)2	Shut-Off Controls 120.2(e) & 160.3(a)2D	Isolation Zone Controls 120.2(g) & 160.3(a)2F	Demand Response 110.12 120.2(b) & 160.3(a)2B	Supply Air Temp. Reset 140.4(f) & 170.2(c)4D	Window Interlocks per 140.4(n) & 170.2(c)4D
HP-1 & 2	Single zone	<= 25,000 ft^2	EMCS	NA: DwellingUnit	NA: DwellingUnit	EMCS	NA: Healthcare only	NA: HRR dwelling unit

[1]FOOTNOTES: Gravity gas wall heaters, gravity floor heaters, gravity room heaters, non-central electric heaters, fireplaces or decorative gas appliances, wood stoves are not required to have setback thermostats.

Project Name:	Moorpark Colllege Administration Building Renovation	**Report Page:**	**(Page 7 of 11)**
Project Address:	7075 Campus Road	**Date Prepared:**	4/17/2023

J. VENTILATION AND INDOOR AIR QUALITY

This table is used to demonstrate compliance with mandatory ventilation requirements in 120.1 120.2(e)3B 140.4(p) and 140.4(q) for all nonresidential and hotel/motel and d:t24refnolink/]160.2, 160.3(a)3D, 170.2(a)4N, 170.2(a)4O for high-rise residential occupancies. For alterations, only ventilation systems being altered within the scope of the permit application need to be documented in this table. In lieu of this table, the required outdoor ventilation rates and airflows may be shown on the plans or the calculations can be presented in a spreadsheet.

01	☐	Check the box if the project is showing ventilation calculations on the plans, or attaching the calculations instead of completing this table.
02	☒	Check this box if the project included Nonresidential, Hotel/Motel Spaces or Multifamily Common Use Spaces
	☐	
03	☐	Check the box if the project is using natural ventilation in any nonresidential or hotel/motel spaces to meet required ventilation rates per 120.1(c)2.

Nonresidential and Hotel/ Motel Multifamily Common Use Ventilation Systems

04		05		06		07
System Name	HP-1 & 2	System Design OA CFM Airflow[1]	3045	System Design Transfer Air CFM	0	Air Filtration per 120.1(c) 141.0(b)2 and 160.2(c)21[2]
						Provided

08	09	10	11	12	13	14	15	16	
Space Name or Item Tag	Mechanical Ventilation Required per 120.1(c)3[3] & 160.2(c)3					Exh. Vent per 120.1(c)4 & 160.2(c)4		DCV or Sensor Controls per 120.1(d)3, 120.1(d)5, and 120.1(e)3[6] 160.2(c)5D 160.2(c)5E 160.2(c)5D	
	Occupancy Type[4]	Conditioned Floor Area (ft^2)	# of Shower heads/ toilets	# of people[5]	Required Min OA CFM	Required Min CFM	Provided per Design CFM		
Full Building Offices	Office space	16238			2435.7	0	0	DCV	NA: Not required per §120.1(d)3
								Occ Sensor	NA: Not required space type
Restrooms	Toilet, public	662			0	0	0	DCV	NA: Not required per §120.1(d)3
								Occ Sensor	NA: Not required space type
17	Total System Required Min OA CFM				2436	18	Ventilation for this System Complies?		Yes

[1] FOOTNOTES: System CFM should include both mechanical and natural ventilation for the zone/system

Project Name:	Moorpark Colllege Administration Building Renovation	**Report Page:**	**(Page 8 of 11)**
Project Address:	7075 Campus Road	**Date Prepared:**	4/17/2023

J. VENTILATION AND INDOOR AIR QUALITY

[2] Air filtration requirements apply to the following three system types per 120.1(c)1A: space conditioning systems utilizing ducts to supply air to occupiable space; supply-only ventilation systems providing outside air to occupiable space; supply side of balanced ventilation systems including heat recovery and energy recovery ventilation systems providing outside air to occupiable space.
[3] Uniform Mechanical Code may have more stringent ventilation requirements; the most stringent code requirement takes precedence.
[4] See Standards Tables 120.1-A and 120.1-B.
[5] For lecture halls with fixed seating, the expected number of occupants shall be determined in accordance with the California Building Code.
[6] 120.2(e)3 requires systems serving rooms that are required by 130.1(c) to have lighting occupancy sensing controls to also have occupancy sensing zone controls for ventilation. Examples of spaces which require lighting occupancy sensors include offices 250ft^2 or smaller, multipurpose rooms less than 1,000 ft^2, classrooms, conference rooms, restrooms, aisles and open areas in warehouses, library book stack aisles, corridors, stairwells, parking garages, and loading and unloading zones, unless excepted by 130.1(c).

Multifamily Dwelling Unit Ventilation Systems

☐	Check the box if the system is using continuous ventilation to meet the ventilation requirements per 160.2(b)2Aivb2							
19	20	21	22	23	24	25	26	27
Space Name or Item Tag	Mechanical Ventilation Required per 120.1(b) & 160.2(b)2				Ventilation per Design		Local Exhaust	Air Filtration per 120.1(c) & 160.2(b)1
	Conditioned Floor Area (ft^2)	# of Bedrooms	# of Dwelling Units	Required Min OA CFM[1]	Supply Air CFM	Exhaust CFM		
28	Is this a balanced system[4]				29	Meeting Outside Air Requirements?		

[1] FOOTNOTES: Uniform Mechanical Code may have more stringent ventilation requirements; the most stringent code requirement takes precedence.
[2] Kitchen range hood will be verified per NA7.18.1 to confirm model is rated by HVI or AHAM.
[3] Air filtration requirements apply to the following three system types per 120.1(c)1A: space conditioning systems utilizing ducts to supply air to occupiable space; supply-only ventilation systems providing outside air to occupiable space; supply side of balanced ventilation systems including heat recovery and energy recovery ventilation systems providing outside air to occupiable space.
[4] A balanced ventilation system provides ventilation airflow to each dwelling-unit at a rate equal to or greater than the required minimum rate, but not more than twenty percent.

K. TERMINAL BOX CONTROLS

This section does not apply to this project.

Project Name:	Moorpark Colllege Administration Building Renovation	**Report Page:**	**(Page 9 of 11)**
Project Address:	7075 Campus Road	**Date Prepared:**	4/17/2023

L. DISTRIBUTION (DUCTWORK and PIPING)

This table is used to show compliance with mandatory pipe insulation requirements found in 120.3 and mandatory requirements found in 120.4(g) for duct sealing.

01	☐	Insulation shall be protected from damage, including that due to sunlight, moisture, equipment maintenance, and wind. Insulation exposed to weather shall be installed with a cover suitable for outdoor service. Insulation covering chilled water piping and refrigerant suction piping located outside the conditioned space shall have a Class I or Class II vapor retarder. All penetrations and joints of which shall be sealed.

Duct Leakage Testing

The answers to the questions below apply to the following duct systems:	HP-1 & 2	**NR/ Common Use:** Duct leakage testing shall not exceed 6% per NA7.5.3 required for these systems?	No
		Dwelling Units: Total duct leakage of duct system shall not exceed 12% or duct system to outside shall not exceed 6% per RA3.1.4 required for systems?	No
		Duct leakage testing per CMC Section 603.10.1 required for these systems?	Yes

11	No	The scope of the project includes only duct systems serving healthcare facilities
12	Yes	Duct system provides conditioned air to an occupiable space for a constant volume, single zone, space-conditioning system.
13	No	The space conditioning system serves less than 5,000 ft^2 of conditioned floor area.
14	No	The combined surface area of the ducts is more than 25% of the total surface area of the entire duct system:
15		The scope of the project includes extending an existing duct system, which is constructed, insulated or sealed with asbestos.
16	No	The scope of the project includes an existing duct system that is documented to have been previously sealed as confirmed through field verification and diagnostic testing in accordance with procedures in the Reference Nonresidential Appendix NA2.
17		All Ductwork and plenums with pressure class ratings shall be constructed to Seal Class A
18		All ductwork is an extension of an existing duct system
19		Ductwork serving individual dwelling unit
20		< 25 ft of new or replacement space conditioning ducts installed
21	R-8	Dust Insulation R-value

M. COOLING TOWERS

This section does not apply to this project.

Project Name:	Moorpark Colllege Administration Building Renovation	**Report Page:**	**(Page 10 of 11)**
Project Address:	7075 Campus Road	**Date Prepared:**	4/17/2023

N. DECLARATION OF REQUIRED CERTIFICATES OF INSTALLATION

Form/Title
NRCI-MCH-01-E - Must be submitted for all buildings

O. DECLARATION OF REQUIRED CERTIFICATES OF ACCEPTANCE

Form/Title	Systems/Spaces To Be Field Verified
NRCA-MCH-02-A - Outdoor Air must be submitted for all newly installed HVAC units. Note: MCH-02-A can be performed in conjunction with MCH-07-A Supply Fan VFD Acceptance (if applicable) since testing activities overlap.	AV20T1CH5;
NRCA-MCH-05-A - Air Economizer Controls	AV20T1CH5;
NRCA-MCH-07-A Supply Fan Variable Flow Controls	AV20T1CH5;
NRCA-MCH-08-A Valve Leakage Test	Multistack ARA-30L;
NRCA-MCH-11-A Automatic Demand Shed Controls	AV20T1CH5;
NRCA-MCH-12-A FDD for Packaged Direct Expansion Units	AV20T1CH5;
NRCA-MCH-18-A Energy Management Control Systems	AV20T1CH5;

P. DECLARATION OF REQUIRED CERTIFICATES OF VERIFICATION

There are no NRCV forms required for this project.

Q. MANDATORY MEASURES DOCUMENTATION LOCATION

This table is used to indicate where mandatory measures are documented in the plan set or construction documentation.

01		02
Compliance with Mandatory Measures documented through MCH Mandatory Measures Note Block	Yes	Plan sheet or construction document location
		M-Sheets

Project Name:	Moorpark Colllege Administration Building Renovation	**Report Page:**	**(Page 11 of 11)**
Project Address:	7075 Campus Road	**Date Prepared:**	4/17/2023

DOCUMENTATION AUTHOR'S DECLARATION STATEMENT

I certify that this Certificate of Compliance documentation is accurate and complete.

Documentation Author Name: Jose Sanchez	Documentation Author Signature:
Company: AE Group Mechanical Engineers, Inc.	Signature Date: 2023-04-17
Address: 838 E Front St	CEA/ HERS Certification Identification (if applicable):
City/State/Zip: Ventura Ca 93001	Phone: 8056531722

RESPONSIBLE PERSON'S DECLARATION STATEMENT

I certify the following under penalty of perjury, under the laws of the State of California:

1. The information provided on this Certificate of Compliance is true and correct.
2. I am eligible under Division 3 of the Business and Professions Code to accept responsibility for the building design or system design identified on this Certificate of Compliance (responsible designer)
3. The energy features and performance specifications, materials, components, and manufactured devices for the building design or system design identified on this Certificate of Compliance conform to the requirements of Title 24, Part 1 and Part 6 of the California Code of Regulations.
4. The building design features or system design features identified on this Certificate of Compliance are consistent with the information provided on other applicable compliance documents, worksheets, calculations, plans and specifications submitted to the enforcement agency for approval with this building permit application.
5. I will ensure that a completed signed copy of this Certificate of Compliance shall be made available with the building permit(s) issued for the building, and made available to the enforcement agency for all applicable inspections. I understand that a completed signed copy of this Certificate of Compliance is required to be included with the documentation the builder provides to the building owner at occupancy.

Responsible Designer Name: Hugh Mcternan	Responsible Designer Signature:
Company: AE Group Mechanical Engineers, Inc.	Date Signed: 2023-04-17
Address: 838 E Front Street	License:
City/State/Zip: Ventura Ca 93001	Phone: 805-653-1722

DIVISION OF THE STATE ARCHITECT
IDENTIFICATION STAMP
DIV. OF THE STATE ARCHITECT
APP: 03-123218 INC:
REVIEWED FOR
SS ☑ FLS ☑ ACS ☑
DATE: 07/11/2024

AMADOR WHITTLE ARCHITECTS, INC.
28328 AGOURA ROAD, SUITE 203
AGOURA HILLS, CA 91301
(805) 530-3938 , (818) 874-0071

Ventura County Community College

PROJECT TITLE
ADMINISTRATION BUILDING RENOVATION
7075 CAMPUS ROAD
MOORPARK, CA 91320

CONSULTANT
AE Group Mechanical Engineers
838 East Front Street
Ventura, California 93001-2925
(805) 653-1722
hugh@aegroupme.com

STAMPS/SEALS
REGISTERED PROFESSIONAL ENGINEER HUGH A. McTERNAN M030626 Ren. 6/30/24 MECHANICAL STATE OF CALIFORNIA
LICENSED ARCHITECT JEAN ANN AMADOR C-22205 APRIL 30, 2025 DATE STATE OF CALIFORNIA

SHEET TITLE:
ENERGY NOTES

PROJECT NO.:	PROJECT ARCH:
DRAWN: JS/HM	CHECKED: HM/PW/TP

SHEET NUMBER:
EN1.0

DATE: 12/22/23 SHEET: ____ OF ____

IF THIS SHEET IS NOT 30" X 42", IT IS NOT FULL SIZE, SCALE ACCORDINGLY

PLUMBING NOTES

1. SCOPE OF WORK: CONNECT ALL PLUMBING FIXTURES AND EQUIPMENT SHOWN ON THE PLUMBING PLANS INCLUDING FURNISHING AND INSTALLING ALL ASSOCIATED PIPING, VALVES, STOPS, TRAPS, DRAINS, ESCUTCHEONS INSULATION, ETC.. ALSO FURNISH AND INSTALL ALL PIPING AND PLUMBING FIXTURES SHOWN ON THE CIVIL, PLUMBING AND ARCHITECTURAL DRAWINGS AND DESCRIBED IN THESE NOTES AND THE BOOK SPECIFICATIONS. IN CONNECTION WITH THIS WORK, CONTRACTOR SHALL ALSO FURNISH AND INSTALL ALL NECESSARY LABOR, DEVICES, HARDWARE AND SYSTEMS REQUIRED TO MAKE SAID SYSTEMS PROPERLY AND SAFELY OPERABLE, INCLUDING, BUT NOT LIMITED TO, SAW CUTTING, TRENCHING AND BACKFILL, PATCHING & FILLING OF UNUSED PENETRATIONS, MOUNTING AND SUPPORT HARDWARE, FRAMING, INSULATION, VALVES, AND CLEANOUTS.

2. EXAMINATION OF SITE AND CONTRACT DOCUMENTS. EACH BIDDER SHALL, AT ITS SOLE COST AND EXPENSE, INSPECT THE SITE OF THE PROPOSED WORK TO BECOME FULLY ACQUAINTED WITH CONDITIONS RELATING TO THE WORK AND TO FULLY UNDERSTAND THE FACILITIES, DIFFICULTIES AND RESTRICTIONS ATTENDING THE EXECUTION OF THE WORK UNDER THE CONTRACT DOCUMENTS AND COST THEREOF. BIDDERS SHALL THOROUGHLY REVIEW AND BE FAMILIAR WITH THE CONTRACT DOCUMENTS, INCLUDING WITHOUT LIMITATION, THE SPECIFICATIONS AND THE DRAWINGS. THE FAILURE OR OMISSION OF ANY BIDDER TO RECEIVE OR EXAMINE ANY OF THE CONTRACT DOCUMENTS, FORMS, INSTRUMENTS, ADDENDA, OR OTHER DOCUMENTS OR TO INSPECT THE SITE SHALL NOT RELIEVE SUCH BIDDER FROM ANY OBLIGATIONS WITH RESPECT TO THE BID PROPOSAL, THE CONTRACT OR THE WORK REQUIRED UNDER THE CONTRACT DOCUMENTS. THE OWNER ASSUMES NO RESPONSIBILITY OR LIABILITY TO ANY BIDDER FOR, NOR SHALL THE OWNER BE BOUND BY, ANY UNDERSTANDINGS, REPRESENTATIONS OR AGREEMENTS OF THE OWNER'S AGENTS, EMPLOYEES OR OFFICERS CONCERNING THE CONTRACT DOCUMENTS OR THE WORK MADE PRIOR TO EXECUTION OF THE CONTRACT. THE SUBMISSION OF A BID PROPOSAL SHALL BE DEEMED PRIMA FACIE EVIDENCE OF THE BIDDER'S FULL COMPLIANCE WITH THE REQUIREMENTS OF THIS SECTION.

3. INTERPRETATION OF DRAWINGS, SPECIFICATIONS OR CONTRACT DOCUMENTS. IF ANY BIDDER IS IN DOUBT AS TO THE TRUE MEANING OF ANY PART OF THE DRAWINGS, THE SPECIFICATIONS OR OTHER PORTIONS OF THE CONTRACT DOCUMENTS; FINDS DISCREPANCIES, ERRORS OR OMISSIONS THEREIN; OR FINDS VARIANCES IN ANY OF THE CONTRACT DOCUMENTS WITH APPLICABLE RULES, REGULATIONS, ORDINANCES AND/OR LAWS, A WRITTEN REQUEST FOR AN INTERPRETATION OR CORRECTION THEREOF MAY BE SUBMITTED TO THE ENGINEER. IT IS THE SOLE AND EXCLUSIVE RESPONSIBILITY OF THE BIDDER TO SUBMIT SUCH REQUEST IN SUFFICIENT TIME FOR THE PREPARATION OF A RESPONSE THERETO AND DELIVERY OF SUCH RESPONSE TO ALL BIDDERS PRIOR TO THE SCHEDULED CLOSING FOR RECEIPT OF BID PROPOSALS. ANY REQUEST OF ANY BIDDER, PURSUANT TO THE FOREGOING SENTENCE THAT IS MADE LESS THAN SEVEN DAYS PRIOR TO THE SCHEDULED CLOSING DATE FOR THE RECEIPT OF BID PROPOSALS SHALL BE DEEMED UNTIMELY. ANY INTERPRETATION OR CORRECTION OF THE CONTRACT DOCUMENTS WILL BE MADE ONLY BY WRITTEN ADDENDUM DULY ISSUED BY THE OWNER OR THE ENGINEER. A COPY OF ANY SUCH ADDENDUM WILL BE MAILED OR OTHERWISE DELIVERED TO EACH BIDDER RECEIVING A SET OF THE CONTRACT DOCUMENTS. NO PERSON IS AUTHORIZED TO RENDER AN ORAL INTERPRETATION OR CORRECTION OF ANY PORTION OF THE CONTRACT DOCUMENTS TO ANY BIDDER, AND NO BIDDER IS AUTHORIZED TO RELY ON ANY SUCH ORAL INTERPRETATION OR CORRECTION. FAILURE TO REQUEST INTERPRETATION OR CLARIFICATION OF THE DRAWINGS, THE SPECIFICATIONS OR OTHER PORTIONS OF THE CONTRACT DOCUMENTS PURSUANT TO THE FOREGOING SHALL BE DEEMED TO BE A WAIVER OF ANY DISCREPANCY, DEFECT, OR CONFLICT THEREIN.

4. DIMENSIONS. ALL DIMENSIONS SHALL HAVE PREFERENCE OVER SCALE. ALL DIMENSIONS SHALL BE VERIFIED IN THE FIELD. ENGINEER SHALL BE NOTIFIED OF ANY DISCREPANCIES BETWEEN ARCHITECTURAL AND ENGINEERING DRAWINGS BEFORE PROCEEDING WITH WORK. IN NO CASE SHALL WORKING DIMENSIONS BE SCALED FROM PLANS, SECTIONS, OR DETAILS ON WORKING DRAWINGS. ALL SIZES OF EQUIPMENT AND MATERIALS SHALL BE VERIFIED WITH EQUIPMENT MANUFACTURER. ALL PLUMBING FIXTURES SHALL BE INSTALLED PER THE DIMENSIONS ON THE ARCHITECTURAL DRAWINGS.

5. CODES AND STANDARDS: ALL WORK SHALL COMPLY WITH THE REQUIREMENTS OF THE 2022 CALIFORNIA PLUMBING CODE, THE 2022 CALIFORNIA MECHANICAL CODE, THE 2022 CALIFORNIA DIVISION OF THE STATE ARCHITECT, AND STANDARD CONSTRUCTION PRACTICES. ALL PLUMBING FIXTURES SHALL BE IN STRICT ACCORDANCE WITH THE FIXTURE SCHEDULE, AND SHALL BE NEW AND FREE FROM DEFECTS. CONTRACTOR SHALL OBTAIN AND PAY FOR ALL REQUIRED PERMITS AND FEES, AND SHALL OBTAIN APPROVED INSPECTIONS FOR ALL WORK AS REQUIRED BY OWNER, DSA, AND LOCAL JURISDICTION. CONTRACTOR SHALL MAINTAIN IN EFFECT ALL INSURANCE REQUIRED BY STATE LAWS, LOCAL JURISDICTION, AND GENERAL CONTRACTOR / OWNER. WHERE CONFLICT OR VARIATION EXISTS AMONGST CODES, SPECIFICATIONS, OR DRAWINGS, THE MOST STRINGENT SHALL GOVERN.

6. SUBMITTALS REQUIRED: PRIOR TO ORDERING FIXTURES AND MATERIALS, CONTRACTOR SHALL FURNISH SUBMITTALS OF ALL FIXTURES AND MATERIALS PROPOSED FOR USE IN THIS PROJECT. ALL FIXTURES AND MATERIALS SHALL BE INSTITUTIONAL GRADE HEAVY DUTY QUALITY. ORDERING OF FIXTURES AND MATERIALS SHALL ONLY PROCEED AFTER SATISFACTORY REVIEW OF ALL SUBMITTALS BY ENGINEER / OWNER. COPIES OF ALL OWNER'S MANUALS, WARRANTIES, AND OTHER WRITTEN INFORMATION REGARDING SYSTEMS SHALL BE SUBMITTED TO OWNER.

7. CONSTRUCTION OBSERVATION: IN ADDITION TO THE REQUIREMENT FOR OBTAINING INSPECTIONS BY THE LOCAL JURISDICTION, CONTRACTOR SHALL NOTIFY ENGINEER AT APPROPRIATE TIMES DURING THE CONSTRUCTION PROCESS SO THAT ENGINEER CAN VISIT SITE TO BECOME GENERALLY FAMILIAR WITH THE PROGRESS AND QUALITY OF CONTRACTOR'S WORK AND TO DETERMINE IF THE WORK IS PROCEEDING IN GENERAL ACCORDANCE WITH THE CONTRACT DOCUMENTS.

8. TRENCHING: MATERIAL SHALL BE EXCAVATED FROM TRENCHES AND PILED ADJACENT TO THE TRENCH. MATERIAL SHALL BE PILED IN SUCH A MANNER THAT WILL CAUSE A MINIMUM OF INCONVENIENCE TO PUBLIC TRAVEL. ALL ROCK, BOULDERS, AND STONES SHALL BE REMOVED TO PROVIDE A MINIMUM CLEARANCE OF SIX (6) INCHES UNDER AND AROUND PIPES. EXCAVATIONS SHALL BE KEPT FREE OF WATER. TRENCHES SHALL BE DUG TO TRUE AND SMOOTH BOTTOM GRADES AND IN ACCORDANCE WITH THE LINES INDICATED ON DRAWINGS AND AS DIRECTED. TRENCH WIDTHS SHALL NOT EXCEED 30 INCHES OR 1.5 TIMES OUTSIDE DIAMETER OF THE PIPE PLUS 18 INCHES WHICHEVER IS GREATER. MINIMUM TRENCH WIDTH SHALL BE THE OUTSIDE DIAMETER OF PIPE INSTALLED PLUS 12 INCHES.

DEPTH OF TRENCHING FOR WATER AND GAS PIPING SHALL BE SUCH AS TO GIVE A MINIMUM COVER OF 18 INCHES OVER THE TOP OF THE PIPE. DEEPER EXCAVATION MAY BE REQUIRED DUE TO LOCALIZED BREAKS IN GRADE, OR TO INSTALL THE NEW PIPING UNDER EXISTING CULVERTS OR OTHER UTILITIES WHERE NECESSARY.

TRENCHING FOR SEWERS AND DRAINS SHALL BE OF SUFFICIENT WIDTH TO PERMIT PROPER JOINTING OF THE PIPE AND BACKFILLING OF MATERIAL ALONG THE SIDES OF THE PIPE. TRENCH WIDTH AT THE SURFACE OF THE GROUND SHALL BE KEPT TO THE MINIMUM AMOUNT NECESSARY TO INSTALL THE PIPE IN A SAFE MANNER. TRENCHES SHALL BE EXCAVATED BELOW THE BARREL OF THE PIPE A SUFFICIENT DISTANCE TO PROVIDE FOR BEDDING MATERIAL

WHERE THE TRENCH BOTTOM IS IN A MATERIAL WHICH IS UNSUITABLE FOR FOUNDATION OR WHICH WILL MAKE IT DIFFICULT TO OBTAIN UNIFORM BEARING FOR THE PIPE, SUCH MATERIAL SHALL BE REMOVED AND A STABLE FOUNDATION PROVIDED. THIS SHALL INCLUDE THE PREPARATION OF THE NATIVE TRENCH BOTTOM AND/OR THE TOP OF THE FOUNDATION MATERIAL TO A UNIFORM GRADE (4" MIN. THICK SAND) SO THAT THE ENTIRE LENGTH OF PIPE RESTS FIRMLY ON A SUITABLE PROPERLY COMPACTED MATERIAL. GRAVEL TO BE USED FOR FOUNDATION PURPOSES SHALL BE OF A TYPE AND GRADATION TO PROVIDE A SOLID COMPACT BEDDING IN THE TRENCH.

9. BACKFILL: CONTRACTOR SHALL COMPLETE 4" SAND AT 95% COMPACTION BEDDING AND THEN BACKFILL TO 6 INCHES OVER THE TOP OF THE PIPE WITH SAND BEFORE STARTING BACKFILLING OPERATIONS. TAKE ALL PRECAUTIONS NECESSARY TO PROTECT THE PIPE FROM DAMAGE, MOVEMENT AND SHIFTING. COMPACTION EQUIPMENT USED ABOVE THE PIPE ZONE SHALL BE OF A TYPE THAT DOES NOT INJURE THE PIPE. WHERE ORIGINAL EXCAVATED MATERIAL IS UNSUITABLE FOR TRENCH BACKFILL, BACKFILL GRAVEL SHALL BE PLACED. UNSUITABLE MATERIAL SHALL BE REMOVED TO A DISPOSAL AREA. WHEREVER A TRENCH IS EXCAVATED IN A PAVED ROADWAY, SIDEWALK OR OTHER AREA WHERE MINOR SETTLEMENTS WOULD BE DETRIMENTAL AND WHERE NATIVE EXCAVATED MATERIAL IS NOT SUITABLE FOR COMPACTION AS BACKFILL, TRENCH SHALL BE BACKFILLED WITH BACKFILL GRAVEL. WARNING TAPE MARKERS AND TRACER WIRES SHALL BE INSTALLED DURING BACKFILL OPERATIONS.

10. WATER PIPING: ALL ABOVE GROUND COLD AND HOT WATER PIPES IN BUILDINGS SHALL BE U.S. MANUFACTURED TYPE "L" HARD COPPER WITH (NON-LEAD) SOLDER SWEAT JOINTS. ALL UNDERGROUND WATER PIPING IN BUILDINGS SHALL BE U.S. MANUFACTURED TYPE "K" SOFT COPPER, WITH NO JOINTS ALLOWED UNDER SLABS. UNDERGROUND JOINTS SHALL BE BRAZED. WHERE PIPES PIERCE FINISHED SURFACES, CHROME PLATED CAST BRASS ESCUTCHEONS WITH SET SCREW (BRASSCRAFT CB SERIES OR EQUAL) SHALL BE INSTALLED. SINK STOPS SHALL BE LEAD-FREE HEAVY PATTERN, ANGLE, 1/2" FEMALE INLET, 1/2" FEMALE OUTLET, WITH LOOSE KEY, CHROME PLATED, CHICAGO FAUCET 442-LK OR EQUAL. CONNECT STOPS WITH CHROME PLATED BRASS NIPPLES INTO FIP ADAPTERS BEHIND ESCUTCHEONS. SUPPLY TUBES SHALL BE BRAIDED STAINLESS STEEL WITH (1) 1/2" FEMALE FITTING & (1) 1/2" MALE FITTING

11. WATER PRESSURE: WATER PRESSURE SHALL BE MAINTAINED AT A MINIMUM OF 60 PSI. IF WATER PRESSURE IS IN EXCESS OF 80 PSI, AN APPROVED WATER PRESSURE REGULATOR AND PRESSURE RELIEF VALVE SHALL BE INSTALLED.

12. WASTE AND VENT PIPING: ALL DRAINS, VENTS, & FITTINGS SHALL BE U.S. MANUFACTURED "NO-HUB" CAST IRON WITH STAINLESS STEEL BAND CLAMPS. THE BUILDING SEWER (BEYOND 5 FEET OF FOUNDATION) SHALL BE U.S. MANUFACTURED SCHEDULE 40 PVC PLASTIC GRAVITY SEWER PIPE MEETING THE REQUIREMENTS OF ASTM D-2665.& D-1785& NSF LISTED. WHERE INDICATED USE US MANUFACTURED ABS DWV SCH. 40 PIPE MEETING THE REQUIREMENTS OF ASTM D3965. EXTENSIONS TO SERVE CLEANOUTS AT GRADE SHALL BE NO-HUB CAST IRON WITH STAINLESS STEEL BAND CLAMPS. ALL LINES SHALL BE SLOPED @ 1/4"/FT MIN OR IN COMPLIANCE WITH CODE. WHERE VENT PIPES PENETRATE THE ROOF, PIPING SHALL BE FLASHED AND COUNTER-FLASHED. VANDAL-PROOF VENT CAPS (JR SMITH 1748, ZURN Z-193, OR EQUAL) SHALL BE INSTALLED ON EVERY PLUMBING VENT. SINKS SHALL BE INSTALLED WITH ADA COMPLIANT OFFSET PERFORATED GRID DRAIN ASSEMBLIES, AMER STD, OR EQUAL. SINK P-TRAPS SHALL BE INSTITUTIONAL GRADE CHROME PLATED VANDAL-PROOF HEAVY DUTY CAST BRASS, MCGUIRE MFG CO "VANDAL TRAP", OR EQUAL. FOR INSTALLATIONS WITH HOT WATER ONLY, WITH MCGUIRE PROWRAP ADA INSULATION. AT EXTERIOR SINKS USE MCGUIRE PRE-WRAPPER OFFSET SINK STRAINER (ADA COMPLIANT). WHERE DRAINS PENETRATE WALLS, CHROME PLATED CAST BRASS ESCUTCHEONS WITH SET SCREWS SHALL BE INSTALLED. COMBINE ALL PLUMBING VENTS AND RUN TO HIGHEST PART OF ROOF, AT LEAST 10-FT. FROM AIR INTAKES. ALL UNDERGROUND CAST IRON SHALL BE WRAPPED WITH 10 MIL POLYETHYLENE PER THE DUCTILE IRON PIPE RESEARCH COUNCIL RECOMMENDATIONS.

13. CLEANOUTS: WALL CLEANOUTS SHALL BE CAST IRON CLEANOUT TEE WITH COUNTERSUNK BRONZE PLUG AND ROUND STAINLESS STEEL COVER WITH VANDAL-PROOF -SCREWS - J.R. SMITH 4532S-UY; ZURN Z-1446-BP-VP, OR EQUAL. FLOOR CLEANOUTS SHALL BE CAST IRON BODY WITH BRONZE PLUG AND SQUARE ADJUSTABLE NON-SKID NICKEL-BRONZE TOP WITH VANDAL PROOF TOP FOR FINISHED FLOOR, J.R. SMITH 4043S-PB, ZURN ZN-1400-TVP, OR EQUAL. CLEANOUTS TO GRADE SHALL BE J.R. SMITH 4253S OR EQUAL WITH BRONZE PLUG AND NON-SKID COVER WITH LIFTING DEVICE SET FLUSH WITH SURFACE FOR PAVED AREAS. NON-TRAFFIC OR NON-SURFACED AREAS SHALL BE INSTALLED WITH CAST IRON CLEANOUT RISERS TERMINATING WITH BRONZE PLUG WITHIN CONCRETE YARD BOX WITH CAST IRON COVER AND THE WORDS "BUILDING SEWER CLEANOUT" MARKED ON COVER.

14. PIPING SUPPORT: ALL PIPING SHALL BE SUPPORTED IN ACCORDANCE WITH THE REQUIREMENTS OF THE 2022 CALIFORNIA PLUMBING CODE. HORIZONTAL WATER PIPES AND CONDENSATE DRAINS SHALL BE HUNG WITH SUPERSTRUT C-727-F ADJUSTABLE FELT-LINED PIPE HANGERS, THREADED ROD, AND BEAM ATTACHMENT BRACKETS, LOCATED AT SIX FOOT MAXIMUM INTERVALS. VERTICAL WATER PIPES AND CONDENSATE DRAINS SHALL BE SUPPORTED AT THEIR BASES AND AT EACH STORY OR AT TEN FOOT MAXIMUM INTERVALS. TO PREVENT SWAYING, PROVIDE LATERAL BRACING AT SIX FOOT INTERVALS ANCHORED TO OVERHEAD FRAMING.

15. TESTING: ALL PIPING AND FIXTURES INSTALLED SHALL BE TESTED IN ACCORDANCE WITH THE REQUIREMENTS OF THE 2022 CALIFORNIA PLUMBING CODE AND THE LOCAL JURISDICTION AND COLLEGE DISTRICT STANDARDS.

16. STERILIZATION: ALL WATER PIPING SHALL BE FLUSHED AND STERILIZED. FLUSH EACH UNIT OF WATER SUPPLY AND DISTRIBUTION SYSTEM THOROUGHLY WITH CLEAN WATER AT THE HIGHEST VELOCITIES ATTAINABLE. STERILIZE WATER LINES BY FILLING WITH A SOLUTION CONTAINING FIFTY (50) PARTS OF CHLORINE PER MILLION PARTS OF WATER AND HOLDING THE SOLUTION THEREIN FOR AT LEAST EIGHT (8) HOURS WITH A WATER HEAD OF AT LEAST FIVE FEET ABOVE THE HIGHEST POINT IN THE SYSTEM. CONTINUE FLUSHING UNTIL THE RESIDUAL CHLORINE IS APPROXIMATELY, BUT NOT MORE THAN, TWO (2.0) PARTS PER MILLION.

17. MAINTAIN A MINIMUM OF TEN FEET OF CLEARANCE BETWEEN ANY AIR INTAKE AND ALL VENTS AND FLUES.

18. MANDATORY ENERGY MEASURES: PLUMBING EQUIPMENT SUBJECT TO CCR TITLE 24, PART 6, SHALL BE CERTIFIED BY THE MANUFACTURER AS COMPLYING WITH THE EFFICIENCY REQUIREMENTS AS PRESCRIBED IN SECTIONS 111, 113, 114, AND 115. SAID PLUMBING EQUIPMENT SHALL BE SPECIFIED AND INSTALLED IN ACCORDANCE WITH SECTION 123.

19. CORRECTION OF WORK: THE CONTRACTOR SHALL PROMPTLY CORRECT ALL WORK THE COLLEGE DISTRICT FINDS DEFECTIVE OR FAILING TO CONFORM TO THE CONTRACT DOCUMENTS. THE CONTRACTOR SHALL BEAR ALL COSTS REQUIRED BY THE CONTRACT DOCUMENTS. IF ANY OF THE WORK IS FOUND TO BE DEFECTIVE OR NOT IN ACCORDANCE WITH THE CONTRACT DOCUMENTS, THE CONTRACTOR SHALL CORRECT IT PROMPTLY AFTER RECEIPT OF A WRITTEN NOTICE FROM THE SCHOOL DISTRICT TO DO SO.

20. AS-BUILT DRAWINGS SHALL BE GIVEN TO THE COLLEGE DISTRICT PRIOR TO ACCEPTANCE OF THE PROJECT.

21. WARRANTY: THE CONTRACTOR SHALL WARRANT THAT ALL SYSTEMS, SUBSYSTEMS, AND COMPONENT PARTS ARE FULLY FREE FROM DEFECTIVE DESIGN, MATERIALS, AND WORKMANSHIP FOR A PERIOD OF THREE YEARS FROM THE DATE OF FINAL ACCEPTANCE BY THE COLLEGE DISTRICT.

22. CLEANUP: CONTRACTOR SHALL THOROUGHLY CLEAN ENTIRE JOBSITE EVERY DAY OF ALL DEBRIS ASSOCIATED WITH PLUMBING INSTALLATION.

23. COORDINATION: CONTRACTOR SHALL COORDINATE WITH THE COLLEGE PROJECT MANAGER AND ALL RELATED TRADES.

24. UNDERGROUND ALERT: CALL 811 BEFORE YOU DIG OR VISIT CALIFORNIA811.ORG TO REQUEST A TICKET ONLINE.

BEFORE LAYING OUT PIPING AND PERFORMING TRENCHING, CONTRACTOR SHALL DETERMINE LOCATIONS OF EXISTING UNDERGROUND UTILITIES. CONTACT "DIG ALERT / UNDERGROUND SERVICE ALERT OF SOUTHERN CALIFORNIA" - 811 OR CALIFORNIA811.ORG. CONTRACTOR SHALL ALSO CONTACT OWNER'S REPRESENTATIVE TO ASCERTAIN LOCATIONS OF UNDERGROUND PIPING AND OTHER CONDITIONS AFFECTING TRENCHING, AND SHALL PERFORM TESTING AND SUBSURFACE EXPLORATION AS NECESSARY TO LOCATE UTILITIES.

25. ALL WORK SHALL BE PERFORMED BY TRAINED AND QUALIFIED WORKERS. THE INSTALLATION SHALL BE EQUAL OR BETTER TO THE STANDARD OF CARE FOR THE RESPECTIVE TRADE. WORK SHALL BE NEAT AND CLEAN.

26. NATURAL GAS PIPING: ALL ABOVE GROUND NATURAL GAS PIPING 2-1/2" AND SMALLER SHALL BE U.S. MANUFACTURED BLACK (INTERIOR) OR GALVANIZED (EXTERIOR) SCH. 40 STEEL PIPE WITH 150 POUND BLACK OR GALVANIZED THREADED FITTINGS. ALL ABOVE GROUND NATURAL GAS PIPING 3" AND LARGER SHALL BE US MANUFACTURED BLACK (INTERIOR) OR GALVANIZED (EXTERIOR) SCH. 40 STEEL PIPE WITH WELDED CONNECTIONS, PER AWS D10.12M/D10.12:2000. CONNECTIONS TO VALVES AND PRESSURE REGULATORS SHALL BE FLANGED. PROVIDE A CAPPED DIRT LEG IN EACH PIPE SERVING GAS BURNING EQUIPMENT. INTERIOR GAS PIPE SHALL BE PAINTED (VERIFY COLOR W/ COLLEGE) AND LABELS INSTALLED AT 20 FOOT INTERVALS. PROVIDE WARNING LABEL AT MEDIUM PRESSURE GAS END USES AND AT MAIN SHUT-OFF VALVE. FOR INDIVIDUAL GAS SHUTOFF VALVES, MEDIUM PRESSURE McDONALD 10558B, LOW PRESSURE McDONALD 10710 FOR 1-1/2" AND SMALLER & ROCKWELL SUPER NORDSTROM 200 CWP FLANGED FOR 2" AND LARGER. PAINT PIPING, VALVES, CLAMPS, & STRUT.

GREEN BUILDING NOTES

1. GENERAL CONTRACTOR SHALL ESTABLISH A CONSTRUCTION WASTE MANAGEMENT PLAN FOR THE DIVERTED MATERIALS, OR MEET LOCAL CONSTRUCTION AND DEMOLITION WASTE MANAGEMENT ORDINANCE, WHICHEVER IS MORE STRINGENT. WASTE MANAGEMENT PLAN SHALL:
A.) IDENTIFY THE MATERIALS TO BE DIVERTED FROM DISPOSAL BY EFFICIENT USAGE, RECYCLING, REUSE ON THE PROJECT OR SALVAGE FOR FUTURE USE OR SALE.
B.) DETERMINE IF MATERIAL WILL BE SORTED ON-SITE OR MIXED
C.) IDENTIFY DIVERSION FACILITIES WHERE MATERIALS COLLECTED WILL BE TAKEN.
D.) SPECIFY THE AMOUNT OF MATERIALS DIVERTED WHICH SHALL BE CALCULATED BY WEIGHT OR VOLUME, BUT NOT BOTH.

2. RECYCLE WASTE MATERIAL BEING REMOVED FROM SITE TO THE GREATEST EXTENT POSSIBLE. RECORD ALL AMOUNTS DISPOSED AND ALL AMOUNTS RECYCLED.

MATERIAL SCHEDULE, ALL U.S. MANUFACTURED

DOMESTIC WATER PIPING, UNDER CONCRETE PAVING:	SOFT COPPER TUBE:TYPE 'K' WATER TUBE
DOMESTIC WATER PIPING, TRANSITION FRM UGND:	SOFT COPPER TUBE:TYPE 'K' WATER TUBE
DOMESTIC WATER PIPING, UNDERGROUND:	SCHEDULE 80 PVC
DOMESTIC WATER PIPING, ABOVE GROUND:	HARD COPPER TUBE:TYPE 'L' WATER TUBE
NATURAL GAS PIPING, UNDERGROUND:	U.S. MFG. POLYETHYLENE PIPE, SDR 11, (11.5 FOR 6")
NATURAL GAS PIPING, ABOVE GROUND (INTERIOR):	STEEL PIPE: U.S. MFG. BLACK STEEL, SCHEDULE 40
NATURAL GAS PIPING, ABOVE GROUND (EXTERIOR):	STEEL PIPE: U.S. MFG. GALVANIZED STEEL, SCHEDULE 40

MOORPARK COLLEGE ADMIN BLDG PIPING PER CPC- APPENDIX A

	QTY	CW FU	HW FU	WASTE FU	CW TOTAL	HW TOTAL	WASTE TOTAL
WATER CLOSET	7	5		4	35	-	20
LAVATORY	7	1	0.75	1	7	5.25	7
URINAL	1	4		2	4	-	2
MOP SINK	1	3	2.25	3	3	2.25	3
DRINKING FOUNTAIN	1	0.5		0.5	0.5	-	0.5
SINKS	8	1.5	1.125	2	12	9	16
HOSE BIBB	1	2.5	-	-	2.5	-	-
HOSE-BIB AFTER ONE	4	1	-	-	4	-	-
TOTAL FIXTURE UNITS					68	16.5	48.5

PRESSURE AT BUILDING	48	PSI
BLDG. DEMAND LOAD FROM CHART A-3	58	GPM
MAXIMUM DISTANCE TO FURTHEST FIXTURE	136	FT.
PLUS 50% FOR FITTINGS	68	FT.
TOTAL	204	FT.
MIN. PRESSURE AT FIXTURE	25	PSI
PRESSURE AVAILABLE FOR FRICTION 48 PSI - 25 PSI = 23 PSI	23	PSI

PRESSURE AVAILABLE PER HUNDRED FEET OF COPPER (23 PSI / 204 FT.) X 100 = 11.3 PSI/100 FT.

PIPE SIZE	1/2"	3/4"	1"	1-1/4"	1-1/2"	2"	2-1/2"
CW (MAX. GPM @ 7 FPS)	3.5 GPM	9.8 GPM	17 GPM	27 GPM	37 GPM	64 GPM	100 GPM
TANK TYPE FIXTURE UNITS	3.5	12.8	24	46	74	195	380
FLUSH VALVE FIXTURE UNITS	-	-	-	10	23	88	245

PLUMBING FIXTURE SCHEDULE

SYMBOL	WASTE	VENT	CW	HW	DESCRIPTION
WC 1	4	2	1-1/4	-	TOILET, WHITE VITREOUS CHINA, ELONGATED BOWL, WALL MOUNT. AMERICAN STANDARD AFWALL MILLENNIUM 3351.101 WITH BENKE EXTRA HEAVY DUTY SOLID PLASTIC SEAT. FLUSH VALVE ZURN MODEL ZER6000 AV-CPM-ONE, WITH 1.28 GAL. MAX. FLUSH. BATTERY POWERED SENSOR OPERATED. INSTALL ON JR SMITH OR ZURN FLOOR MOUNTED CARRIER. SEE ARCH DRAWINGS FOR ADA INSTALLATION REQTS.
L 1	2	1-1/2	1/2	1/2	LAVATORY, BRADLEY OMNIDECK WITH WASHBAR MODEL LD-5010. WITH MASTER CONTROLLER, VALVE ASSEMBLY S08-2401TMA, DC POWER ADAPTER, ACCESS PANEL MOUNTING BRACKETS (PROVIDE BACKING). 0.35 GPM AERATOR, SOAP DISPENSER, AND DRYER (110 V, 20 AMP). SEE 74/S2.06 FOR ANCHORAGE DETAIL.
L 2	2	1-1/2	1/2	1/2	LAVATORY, WALL MOUNT, WHITE VITREOUS CHINA, AMERICAN STANDARD "LUCERNE" 0355.012, W/ THREE HOLE, W/ ZURN MODEL Z6915-XL-F, 0.5 GPM SPRAY HEAD, BATTERY POWERED SENSOR FAUCET COLD & HOT WATER W/ MIXING VALVE SET FAUCET TO RUN MIN. 10 SECONDS. INSTALL TRUEBRO LAV SHIELD. ROUGH IN PIPING AND DEVICES WITHIN LAV SHIELD TO AVOID CONFLICTS. SEE ARCHITECTURAL PLANS FOR ADA COMPLIANT REQUIREMENTS FOR HEIGHTS AND LOCATIONS FOR EACH LAVATORY. INSTALL ON JR SMITH OR ZURN CARRIER
U 1	2	1-1/2	1	-	URINAL, WHITE VITREOUS CHINA, WALL HUNG, AMERICAN STANDARD WASHBROOK, 1/8 GALLON PER FLUSH , 2" SPUD, ZURN FLUSHOMETER BATTERY POWERED, SENSOR OPERATED ZER6003AV-ULF-CPM. INSTALL ON NEW JR SMITH OR ZURN CARRIER. SEE ARCHITECTURAL PLANS FOR ADA COMPLIANT INSTALLATION REQTS.
DF 1	2	1-1/2	3/4	-	DRINKING FOUNTAIN: ELKAY MODEL #LZSTLDDWSVRSK, BI-LEVEL COOLER WITH BOTTLE FILLING STATION AND VANDAL RESISTANT BUBBLER. ELECT. DATA 115 VOLTS, 60 HZ, FLA. 1.0 AMPS. WALL MOUNTED WITH FACTORY WALL MOUNT BRACKET. PROVIDE BACKING. SEE ARCHITECTURAL DETAILS FOR ADA INSTALLATION DIMENSIONS. INSTALL WITH DIELECTRIC STRAINER AND PLASTIC TRAPS.
HB 1	-	-	3/4	-	HYDRANT, POLISHED BRASS, KEYED, NIBCO "WOODFORD" 24P POLISHED BRASS WITH VACUUM BREAKER.
HB 2	-	-	3/4	-	HYDRANT IN BOX. ZURN Z1350-VB. WITH VACUUM BREAKER AND KEY CYLINDER LOCK.
TP 1	-	-	1/2	-	TRAP PRIMER, MIFAB M-500, INSTALL IN COLD WATER LINE WITH 16"X14" JR SMITH 4730-U-NB STAINLESS STEEL ACCESS COVER. WITH VACUUM BREAKER. INSTALL W/MI-DU DISTRIBUTION UNIT WHERE MULTIPLE TRAPS ARE SERVED.
WHA 1	-	-	1	-	WATER HAMMER ARRESTOR. JR SMITH 5010, ZURN Z-1700 #200, OR EQUAL. LOCATE INSIDE WALL WITH 16"X14" JR SMITH 4730-U-NB, STAINLESS STEEL ACCESS COVER WITH VANDAL-PROOF SCREWS.
WHA 2	-	-	1	-	WATER HAMMER ARRESTOR. JR SMITH 5040, ZURN Z-1700 #400, OR EQUAL. LOCATE INSIDE WALL WITH 16"X14" JR SMITH 4730-U-NB, STAINLESS STEEL ACCESS COVER WITH VANDAL-PROOF SCREWS.
SOV 1	-	-	-	-	SHUT-OFF VALVE; LEAD-FREE. NIBCO S-685-80-LF. 1/2" THRU 2", BRONZE BALL VALVE, FULL PORT, SOLDER END. LOCATE IN RESTROOM CEILINGS & WHERE INDICATED BEHIND 15"X15" JR SMITH 4730-U-NP STAINLESS STEEL ACCESS COVER W/VANDAL PROOF SCREWS, SIZES ON PLANS.
SOV 2	-	-	-	-	SHUT- OFF VALVE. NIBCO S-585-80-Y-LF 2-1/2" & LARGER, BALL VALVE, FULL PORT, SOLDER END, LEAD FREE LOCATED AT PRESSURE REGULATOR STATION
FD 1	2	1-1/2	1/2 (TP)	-	FLOOR DRAIN. JR SMITH MODEL #2005Y-B-P, ZURN MODEL #415 NH-P, OR EQUAL. WITH SQUARE TOP, NO HUB AND TRAP PRIMER CONNECTION.
FS 1	2	1-1/2	3/4	-	FLOOR SINK: J.R. SMITH MODEL #3003Y SIZE ON PLANS WITH TRAP PRIMER CONNECTION
MS 1	3	2	3/4	3/4	MOP SINK. FIAT PRODUCTS MODEL TSB 3001 W/ S.S. WALL GUARDS, MOP HANGER BRACKET, HOSE AND HOSE BRACKET. CHICAGO FAUCET MODEL 897-RCF W/ WALL BRACKET
S 1	2	1-1/2	1/2	1/2	SINK. 18 GA STAINLESS STEEL. JUST MODEL SL ADA 1921 A-GR-6-1/2" DEEP LEDGEBACK. CHICAGO FAUCET MODEL 1100-GN-2AE3-317ABCP ADA ACCESSIBLE. COORDINATE DIMENSIONS WITH CABINET CONTRACTOR.
S 2	2	1-1/2	1/2	1/2	JUST SINK MODEL DL-2143-A-GR-ADA RIM MOUNT IN COUNTERTOP, 7-1/2" DEPTH. CHICAGO FAUCET MODEL 1100-E35-317ABCP, 1.5 GPM. ADA COMPLIANT SINK AND FAUCET. COORDINATE DIMENSIONS WITH CABINET CONTRACTOR.
WH 1	-	-	1	1	WATER HEATER HEAT PUMP, RHEEM MODEL XE40T10H45UO. 40 GAL.208/240 VOLTS, 60 HZ, 1 PHASE, 30 AMPS 4,500 WATTS. WEIGHT 491 LBS
RP 1	-	-	-	-	RECIRCULATION PUMP. GRUNDFOS MODEL UP25-64SU. 5 GPM @15 FT HEAD. 110VOLT 180 WATTS. WITH HONEYWELL AQUASTAT T775A W STRAP-ON SENSOR . 110 VOLT
TV 1	-	-	-	-	TEMPERING VALVE WATTS MODEL LFN170-M3 W/ UNIONS AND MOUNT ON WALL. SEE WATER HEATER PIPING DIAGRAM.
GSOV 1	-	-	-	-	GAS SHUT OFF VALVE: A.Y. McDONALD 10710, THREADED ENDS. INSTALL PER MANUFACTURERS RECOMMENDATIONS. FOR SIZES THROUGH 1-1/2".
GPR 1	-	-	-	-	GAS PRESSURE REGULATOR. AMERICAN REGULATOR CO. MODEL 1843-B-1/2". INSTALL METAL TAG AT REGULATOR "WARNING 5 PSI GAS PRESSURE AT INLET".
GSOV 2	-	-	-	-	GAS SHUT OFF VALVE: A.Y. McDONALD 10558B. MEDIUM PRESSURE. EQUIPMENT SHUT OFF VALVE. INSTALL PER MANUFACTURERS RECOMMENDATIONS. SEE PLANS FOR SIZES.
EQV 1	-	-	-	-	SEISMIC SAFETY GAS VALVE: KOSO OR SAFE-T-QUAKE SIZE ON PLANS. VERIFY (E) GAS SIZE AND LOCATION. PROVIDE MODEL SUITABLE FOR ORIENTATION OF INSTALLED UNIT.
CP 1	-	-	-	-	CONDENSATE PUMP. LITTLE GIANT VCMX-20ULST. W/ 3/8" TUBING TO 3/4" COPPER CONNECTION. ELECTRICAL: 208V, 60 HZ, MAX 1.5 AMPS, MAX 93 WATTS.

MEP COMPONENT ANCHORAGE NOTE

ALL MECHANICAL, PLUMBING, AND ELECTRICAL COMPONENTS SHALL BE ANCHORED AND INSTALLED PER THE DETAILS ON THE DSA APPROVED CONSTRUCTION DOCUMENTS. THE FOLLOWING COMPONENTS SHALL BE ANCHORED OR BRACED TO MEET THE FORCE AND DISPLACEMENT REQUIREMENTS PRESCRIBED IN THE 2022 CBC SECTIONS 1617A.1.18 THROUGH 1617A.1.26 AND ASCE 7-16 CHAPTER 13, 26, AND 30:

1. ALL PERMANENT EQUIPMENT AND COMPONENTS.
2. TEMPORARY, MOVEABLE OR MOBILE EQUIPMENT THAT IS PERMANENTLY ATTACHED (E.G. HARD WIRED) TO THE BUILDING UTILITY SERVICES SUCH AS ELECTRICITY, GAS OR WATER. "PERMANENTLY ATTACHED" SHALL INCLUDE ALL ELECTRICAL CONNECTIONS EXCEPT PLUGS FOR 110/220 VOLT RECEPTACLES HAVING A FLEXIBLE CABLE.
3. TEMPORARY, MOVABLE OR MOBILE EQUIPMENT WHICH IS HEAVIER THAN 400 POUNDS OR HAS A CENTER OF MASS LOCATED 4 FEET OR MORE ABOVE THE ADJACENT FLOOR OR ROOF LEVEL THAT DIRECTLY SUPPORT THE COMPONENT IS REQUIRED TO BE RESTRAINED A MANNER APPROVED BY DSA.

THE FOLLOWING MECHANICAL AND ELECTRICAL COMPONENTS SHALL BE POSITIVELY ATTACHED TO THE STRUCTURE, BUT NEED NOT DEMONSTRATE DESIGN COMPLIANCE WITH REFERENCES NOTED ABOVE. THESE COMPONENTS SHALL HAVE FLEXIBLE CONNECTIONS PROVIDED BETWEEN THE COMPONENT AND ASSOCIATED DUCTWORK, PIPING, AND CONDUIT. FLEXIBLE CONNECTIONS MUST ALLOW MOVEMENT IN BOTH TRANSVERSE AND LONGITUDINAL DIRECTION.

A. COMPONENTS WEIGHING LESS THAN 400 POUNDS AND HAVE A CENTER OF MASS LOCATED 4 FEET OR LESS ABOVE THE ADJACENT FLOOR OR ROOF LEVEL THAT DIRECTLY SUPPORT THE COMPONENT.
B. COMPONENTS WEIGHING LESS THAN 20 POUNDS, OR IN THE CASE OF DISTRIBUTED SYSTEMS, LESS THAN 5 POUNDS PER FOOT, WHICH ARE SUSPENDED FROM A ROOF OR FLOOR OR HUNG FROM A WALL.

THE ANCHORAGE OF ALL MECHANICAL, ELECTRICAL AND PLUMBING COMPONENTS SHALL BE SUBJECT TO THE APPROVAL OF THE DESIGN PROFESSIONAL IN GENERAL RESPONSIBLE CHARGE OR STRUCTURAL ENGINEER DELEGATED RESPONSIBILITY AND ACCEPTANCE BY DSA. THE PROJECT INSPECTOR WILL VERIFY THAT ALL COMPONENTS AND EQUIPMENT HAVE BEEN ANCHORED IN ACCORDANCE WITH THE ABOVE REQUIREMENTS.

APPLICABLE CODE: 2022 CBC

PIPING, DUCTWORK, AND ELECTRICAL DISTRIBUTION SYSTEM BRACING NOTE

PIPING, DUCTWORK, AND ELECTRICAL DISTRIBUTION SYSTEMS SHALL BE BRACED TO COMPLY WITH THE FORCES AND DISPLACEMENTS PRESCRIBED IN ASCE 7-16 SECTION 13.3 AS DEFINED IN ASCE 7-16 SECTIONS 13.6.5, 13.6.6, 13.6.7, 13.6.8; AND 2022 CBC, SECTION 1617A.1.24, 1617A.1.25 AND 1617A.1.26.

THE METHOD OF SHOWING BRACING AND ATTACHMENTS TO THE STRUCTURE FOR THE IDENTIFIED DISTRIBUTION SYSTEM ARE AS NOTED BELOW. WHEN BRACING AND ATTACHMENTS ARE BASED ON A PREAPPROVED INSTALLATION GUIDE (E.G., HCAi OPM FOR 2013 CBC OR LATER), COPIES OF THE BRACING SYSTEM INSTALLATION GUIDE OR MANUAL SHALL BE AVAILABLE ON THE JOBSITE PRIOR TO THE START OF AND DURING THE HANGING AND BRACING OF THE DISTRIBUTION SYSTEMS. THE STRUCTURAL ENGINEER OF RECORD SHALL VERIFY THE ADEQUACY OF THE STRUCTURE TO SUPPORT THE HANGER AND BRACE LOADS.

MECHANICAL PIPING (MP), MECHANICAL DUCTS (MD), PLUMBING PIPING (PP), ELECTRICAL DISTRIBUTION SYSTEMS (E):

MP ☐ MD ☐ PP ☒ E ☐ - OPTION 1: DETAILED ON THE APPROVED DRAWINGS WITH PROJECT SPECIFIC NOTES AND DETAILS.
MP ☐ MD ☐ PP ☐ E ☐ - OPTION 2: SHALL COMPLY WITH HCAi (OSHPD) PRE-APPROVAL (OPM #) #______________, AS INCLUDED IN THESE DRAWINGS WITH PROJECT-SPECIFIC NOTES AND DETAILS.

ABBREVIATIONS

ABBREV.	ABBREVIATIONS
ABV.	ABOVE
AFF	ABOVE FINISHED FLOOR
ACC.	ACCESSIBLE
APPROX.	APPROXIMATILY
BLW.	BELOW
BOT	BOTTOM
BLDG	BUILDING
CLG	CEILING
CD	CEILING DIFFUSER
CL	CENTERLINE
COTG	CLEAN OUT TO GRADE
CW	COLD WATER
CWV	COMBINATION WASTE/VENT
CONT	CONTINUED
CFM	CUBIC FEET PER MINUTE
DIA	DIAMETER
DWN	DOWN
DS	DOWN SPOUT
DWG	DRAWING
EA	EACH
ELEC	ELECTRIC
ELEV	ELEVATION
EQ	EQUIPMENT
EQUIP	EQUIPMENT
EXH	EXHAUST
(E)	EXISTING
FIN	FINISHED
FLR	FLOOR
FCO	FLOOR CLEAN OUT
FRM	FROM
GPM	GALLONS PER MINUTE
G	GAS
MAX.	MAXIMUM
MIN.	MINIMUM
(N)	NEW
OC	ON CENTER
POC	POINT OF CONNECTION
RA	RETURN AIR
RD	ROOF DRAIN
RO	ROOF OVERFLOW
SD	STORM DRAIN
SHT	SHEET
SOV	SHUT-OFF VALVE
SR	SIDEWALL REGISTER
TYP	TYPICAL
UGND	UNDERGROUND
VTR	VENT TO ROOF
WH	WATER HEATER
WCO	WALL CLEAN-OUT

SYMBOL LEGEND

CLEAN-OUT TO GRADE IN YARD BOX
FLOOR CLEAN-OUT
WALL CLEAN-OUT
SHUT-OFF VALVE
P.O.D. POINT OF DISCONNECTION
P.O.C. POINT OF CONNECTION
X 1 EQUIPMENT TAG SEE PLUMB. SCHEDULE

IMPORTANT NOTICE

ALL UTILITY LOCATIONS ARE APPROXIMATE. CONTRACTOR IS TO NOTIFY UNDERGROUND SERVICE ALERT TWO WORKING DAYS PRIOR TO STARTING ANY EXCAVATION OR RESURFACING.

CONTACT 811 OR california811.org

DIGALERT

CONTACT 811

AT LEAST TWO DAYS BEFORE YOU DIG

UNDERGROUND SERVICE ALERT OF SOUTHERN CALIFORNIA

PLUMBING INDEX

P1.0	PLUMBING NOTES & SCHEDULE
P2.0	PLUMBING DEMOLITION FLOOR PLAN
P2.1	PLUMBING DEMOLITION ROOF PLAN
P3.0	PLUMBING PLAN
P3.1	PLUMBING ROOF PLAN
P4.0	PLUMBING DETAILS
P5.0	PLUMBING RISERS

NATURAL GAS PIPE SIZING PER CPC - CHAPTER 12, TABLE 1215.2(1)
MOORPARK COLLEGE ADMINISTRATION BUILDING

EQUIPMENT	QTY	BTUH/EA	TOTAL BTUH
AC	2	220,000	440,000

TOTAL: 440,000
CFH @ 1,000 BTUH/CF 440 CFH
DISTANCE TO FURTHEST APPLIANCE: 105 FT.
FROM TABLE 1215.2(1) (125 FT.)

SIZE:	1/2"	3/4"	1"	1-1/4"	1-1/2"
CFH:	44	92	173	355	532

DIVISION OF THE STATE ARCHITECT
IDENTIFICATION STAMP DIV. OF THE STATE ARCHITECT
APP: 03-123218 INC:
REVIEWED FOR
SS ☑ FLS ☑ ACS ☑
DATE: 07/11/2024

AMADOR WHITTLE ARCHITECTS, INC.
28328 AGOURA ROAD, SUITE 203
AGOURA HILLS, CA 91301
(805) 530-3938 , (818) 874-0071

Ventura County Community College

PROJECT TITLE

ADMINISTRATION BUILDING RENOVATION

7075 CAMPUS ROAD
MOORPARK, CA 91320

CONSULTANT

AE Group
Mechanical Engineers
838 East Front Street
Ventura, California 93001-2925
(805) 653-1722
hugh@aegroupme.com

STAMPS/SEALS

REGISTERED PROFESSIONAL ENGINEER HUGH A. McTERNAN M030626 Ren. 6/30/24 MECHANICAL STATE OF CALIFORNIA

LICENSED ARCHITECT JEAN ANN AMADOR C-22205 APRIL 30, 2025 DATE STATE OF CALIFORNIA

SHEET TITLE:

PLUMBING NOTES & SCHEDULE

PROJECT NO.: | PROJECT ARCH:
DRAWN: JS/HM | CHECKED: HM/PW/TP

SHEET NUMBER:

P1.0

DATE: 12/22/23 | SHEET: ____ OF ____

IF THIS SHEET IS NOT 30" X 42", IT IS NOT FULL SIZE, SCALE ACCORDINGLY

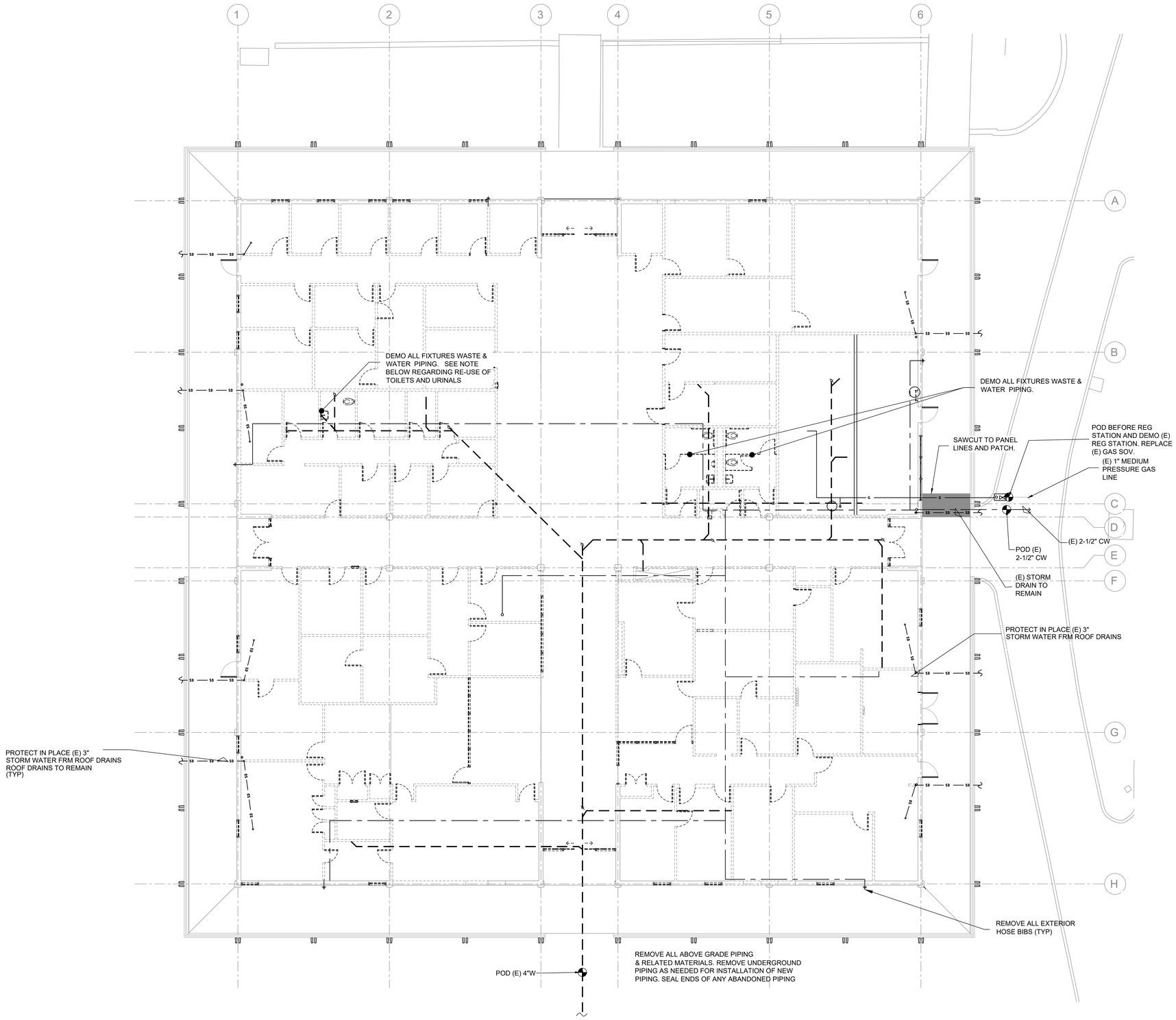

1 DEMOLITION PLUMBING FLOOR PLAN
1/8" = 1'-0"

DIVISION OF THE STATE ARCHITECT

IDENTIFICATION STAMP
DIV. OF THE STATE ARCHITECT
APP: 03-123218 INC:
REVIEWED FOR
SS ☑ FLS ☑ ACS ☑
DATE: 07/11/2024

AMADOR WHITTLE
ARCHITECTS, INC.
28328 AGOURA ROAD, SUITE 203
AGOURA HILLS, CA 91301
(805) 530-3938 , (818) 874-0071

Ventura County Community College

PROJECT TITLE

ADMINISTRATION BUILDING RENOVATION

7075 CAMPUS ROAD
MOORPARK, CA 91320

CONSULTANT

AE Group
Mechanical Engineers
838 East Front Street
Ventura, California 93001-2925
(805) 653-1722
hugh@aegroupme.com

STAMPS/SEALS

REGISTERED PROFESSIONAL ENGINEER
HUGH A. McTERNAN
M030626
Ren. 6/30/24
MECHANICAL
STATE OF CALIFORNIA

LICENSED ARCHITECT
JEAN ANN JAMISON
C-22205
APRIL 30, 2025
DATE
STATE OF CALIFORNIA

SHEET TITLE:

DEMOLITION PLUMBING FLOOR PLAN

PROJECT NO:	PROJECT ARCH:
DRAWN: JS/HM	CHECKED: HM/PW/TP

SHEET NUMBER:

P2.0

DATE: 12/22/23 SHEET: ____ OF ____

IF THIS SHEET IS NOT 30" X 42", IT IS NOT FULL SIZE, SCALE ACCORDINGLY

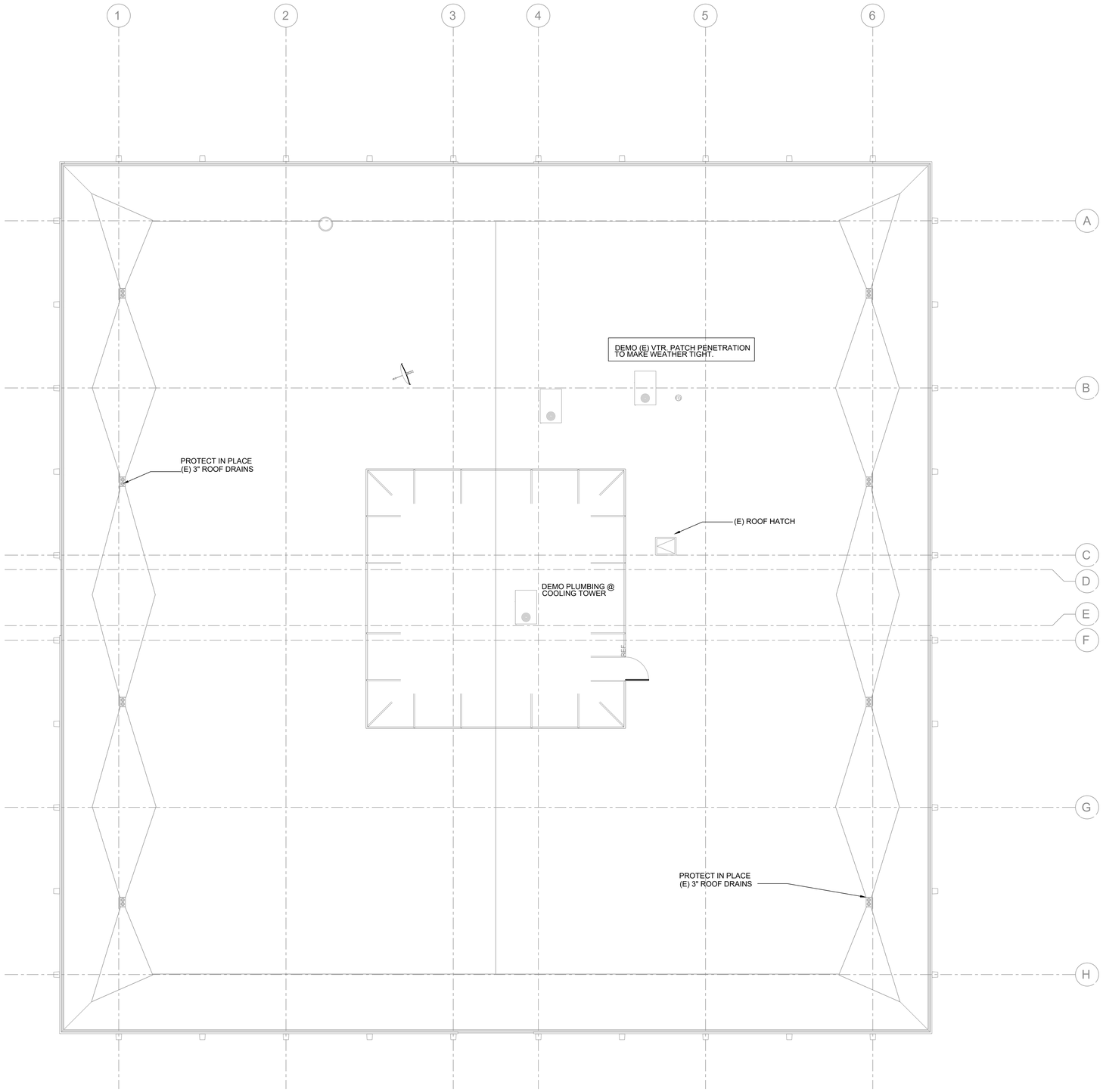

1 DEMOLITION PLUMBING ROOF PLAN
1/8" = 1'-0"

DIVISION OF THE STATE ARCHITECT

IDENTIFICATION STAMP
DIV. OF THE STATE ARCHITECT
APP: 03-123218 INC:
REVIEWED FOR
SS ☑ FLS ☑ ACS ☑
DATE: 07/11/2024

AMADOR WHITTLE
ARCHITECTS, INC.
28328 AGOURA ROAD, SUITE 203
AGOURA HILLS, CA 91301
(805) 530-3938 , (818) 874-0071

Ventura County Community College

PROJECT TITLE

ADMINISTRATION BUILDING RENOVATION

7075 CAMPUS ROAD
MOORPARK, CA 91320

CONSULTANT

AE Group
Mechanical Engineers
838 East Front Street
Ventura, California 93001-2925
(805) 653-1722
hugh@aegroupme.com

STAMPS/SEALS

REGISTERED PROFESSIONAL ENGINEER
HUGH A. MCTIERNAN
M030626
Ren. 6/30/24
MECHANICAL
STATE OF CALIFORNIA

LICENSED ARCHITECT
JEAN ANN AMADOR
C-22205
APRIL 30, 2025
DATE
STATE OF CALIFORNIA

SHEET TITLE:

DEMOLITION PLUMBING ROOF PLAN

PROJECT NO:	PROJECT ARCH:
DRAWN: JS/HM	CHECKED: HM/PW/TP

SHEET NUMBER:

P2.1

DATE: 12/22/23	SHEET: ____ OF ____

IF THIS SHEET IS NOT 30" X 42", IT IS NOT FULL SIZE, SCALE ACCORDINGLY

LINE LEGEND

	(N) COLD WATER
	HOT WATER (TYPE "L" COPPER; INSULATED)
	(N) VENT (NO-HUB CAST IRON)
	(E) WASTE (NO-HUB CAST IRON)
	(N) WASTE (NO-HUB CAST IRON)
COND	(N) CONDENSATE
MPG MPG	MEDIUM PRESSURE GAS
G G	GAS

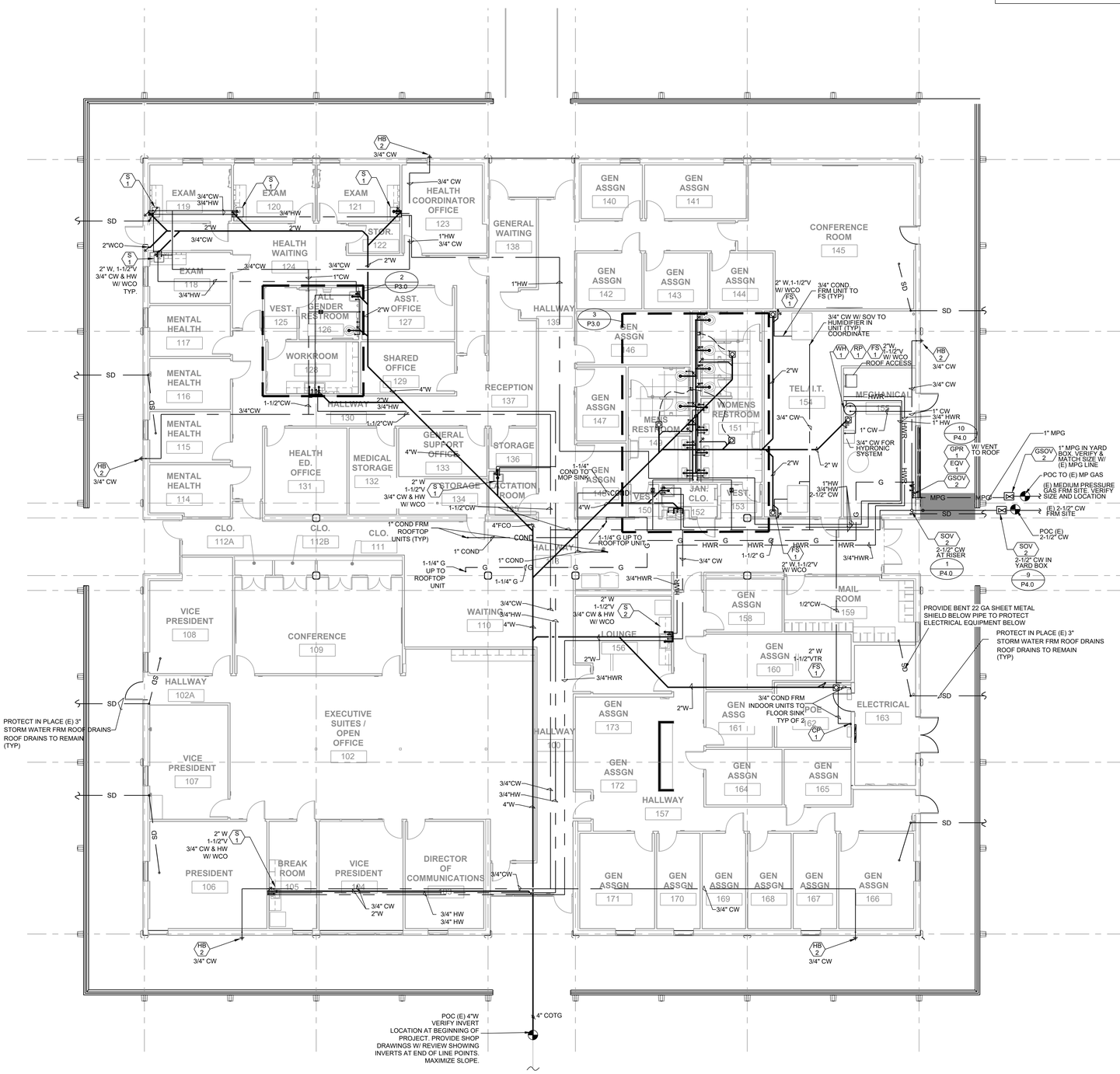

1 PLUMBING FLOOR PLAN
1/8" = 1'-0"

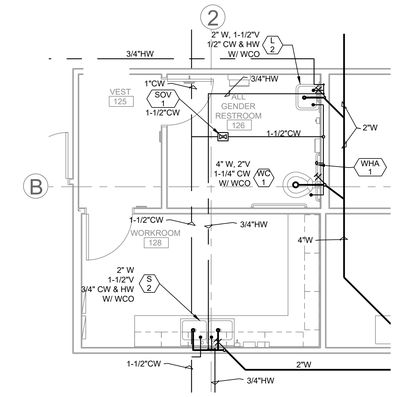

2 ENLARGED PLUMBING FLOOR PLAN
SCALE 1/4" = 1'-0"

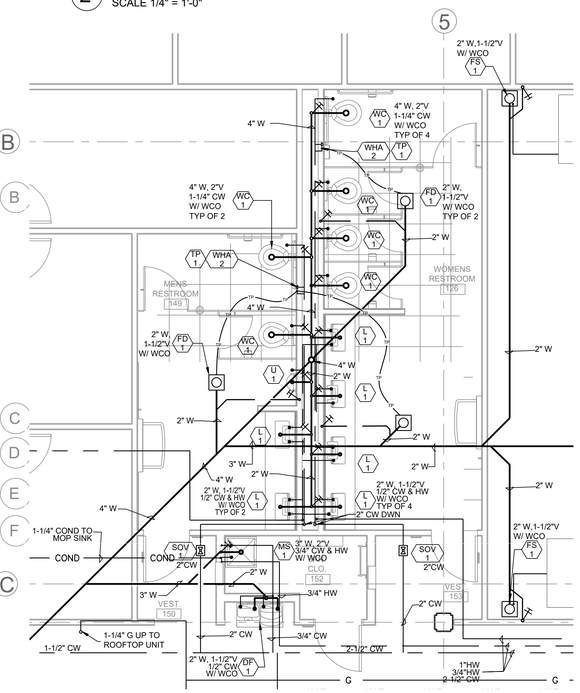

3 ENLARGED PLUMBING FLOOR PLAN
SCALE 1/4" = 1'-0"

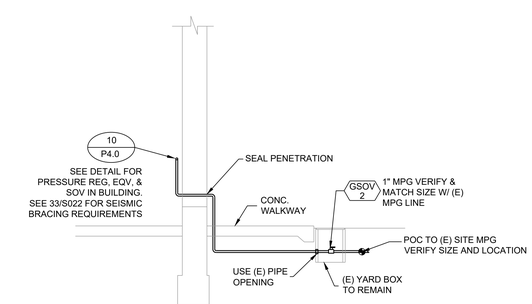

4 GAS LINE TO BUILDING
SCALE NO SCALE

DIVISION OF THE STATE ARCHITECT
IDENTIFICATION STAMP
DIV. OF THE STATE ARCHITECT
APP: 03-123218 INC:
REVIEWED FOR
SS ☑ FLS ☑ ACS ☑
DATE: 07/11/2024

AMADOR WHITTLE ARCHITECTS, INC.
28328 AGOURA ROAD, SUITE 203
AGOURA HILLS, CA 91301
(805) 530-3938 , (818) 874-0071

Ventura County Community College

PROJECT TITLE
ADMINISTRATION BUILDING RENOVATION

7075 CAMPUS ROAD
MOORPARK, CA 91320

CONSULTANT

AE Group
Mechanical Engineers
838 East Front Street
Ventura, California 93001-2925
(805) 653-1722
hugh@aegroupme.com

STAMPS/SEALS
REGISTERED PROFESSIONAL ENGINEER HUGH A. MCTERNAN M030626 Exp. 6/30/24 MECHANICAL STATE OF CALIFORNIA
LICENSED ARCHITECT JEAN ANN AMADOR C-22205 APRIL 30, 2025 DATE STATE OF CALIFORNIA

SHEET TITLE:
PLUMBING FLOOR PLAN

PROJECT NO:	PROJECT ARCH:
DRAWN: JS/HM	CHECKED: HM/PW/TP

SHEET NUMBER:
P3.0

DATE: 12/22/23 SHEET: ___ OF ___

IF THIS SHEET IS NOT 30" X 42", IT IS NOT FULL SIZE, SCALE ACCORDINGLY

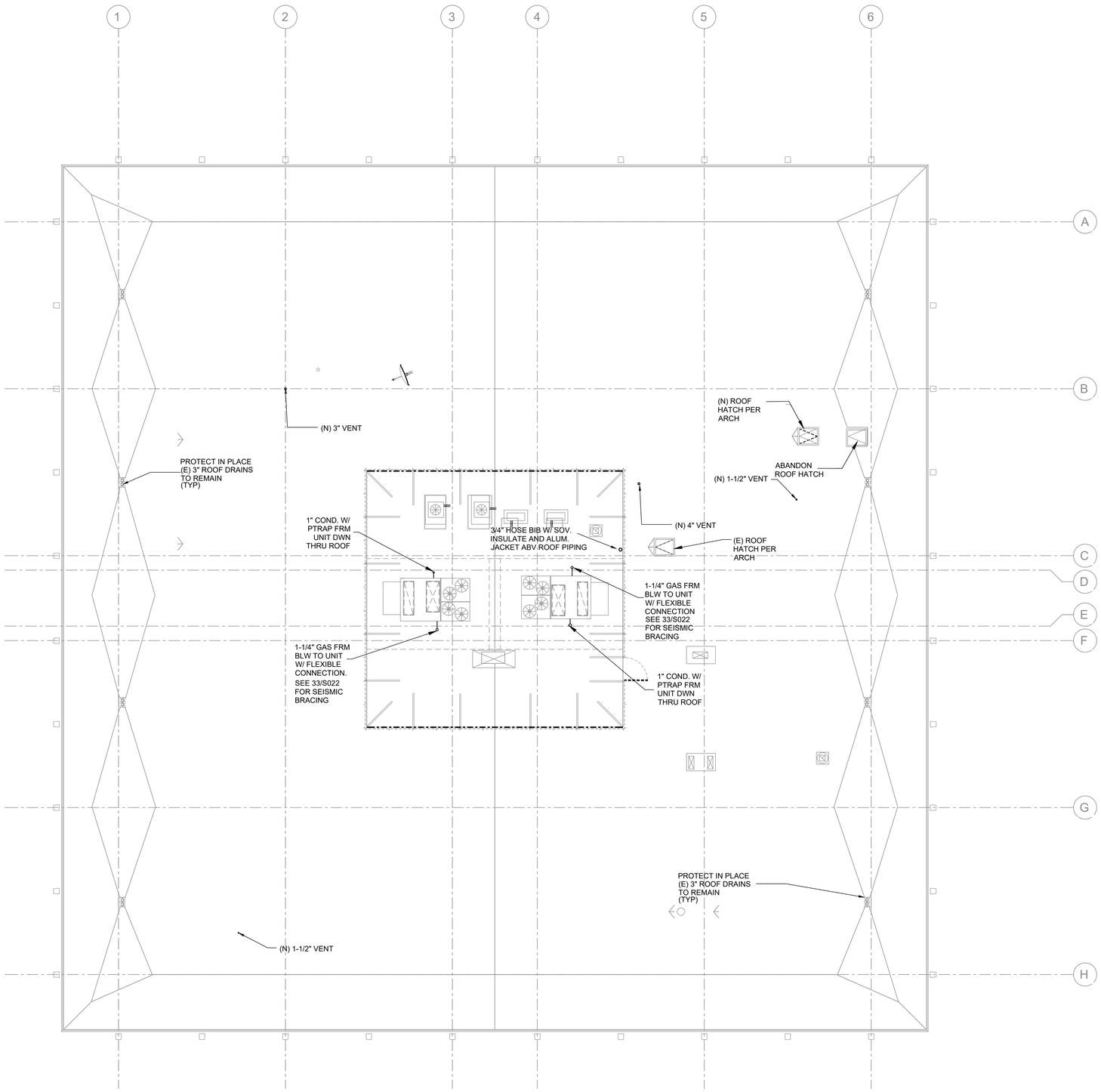

1 PLUMBING ROOF PLAN
1/8" = 1'-0"

DIVISION OF THE STATE ARCHITECT

IDENTIFICATION STAMP
DIV. OF THE STATE ARCHITECT
APP: 03-123218 INC:
REVIEWED FOR
SS ☑ FLS ☑ ACS ☑
DATE: 07/11/2024

AMADOR WHITTLE
ARCHITECTS, INC.
28328 AGOURA ROAD, SUITE 203
AGOURA HILLS, CA 91301
(805) 530-3938 , (818) 874-0071

Ventura County Community College

PROJECT TITLE

ADMINISTRATION BUILDING RENOVATION

7075 CAMPUS ROAD
MOORPARK, CA 91320

CONSULTANT

AE Group
Mechanical Engineers
838 East Front Street
Ventura, California 93001-2925
(805) 653-1722
hugh@aegroupme.com

STAMPS/SEALS

REGISTERED PROFESSIONAL ENGINEER
HUGH A. McTERNAN
M030626
Ren. 6/30/24
STATE OF CALIFORNIA

LICENSED ARCHITECT
JEAN ANN AMADOR
C-22205
APRIL 30, 2025
DATE
STATE OF CALIFORNIA

SHEET TITLE:

PLUMBING
ROOF
PLAN

PROJECT NO:	PROJECT ARCH:
DRAWN: JS/HM	CHECKED: HM/PM/TP

SHEET NUMBER:

P3.1

DATE: 12/22/23 SHEET: ____ OF ____

IF THIS SHEET IS NOT 30" X 42", IT IS NOT FULL SIZE, SCALE ACCORDINGLY

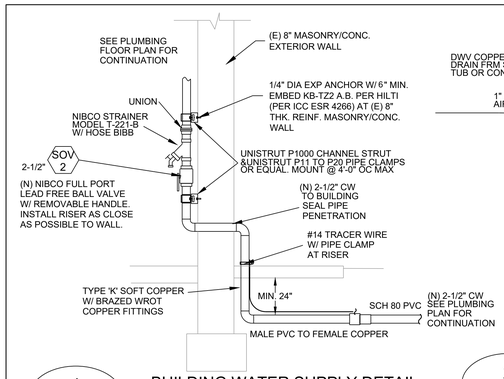

1 P4.0 BUILDING WATER SUPPLY DETAIL

SCALE: NO SCALE

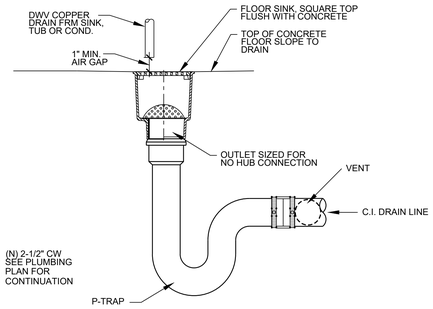

2 P4.0 FLOOR SINK DETAIL

SCALE: NO SCALE

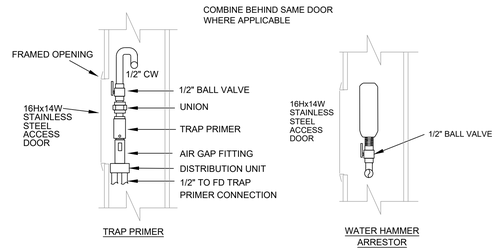

3 P4.0 TRAP PRIMER & WATER HAMMER ARRESTOR DETAIL

SCALE: NO SCALE

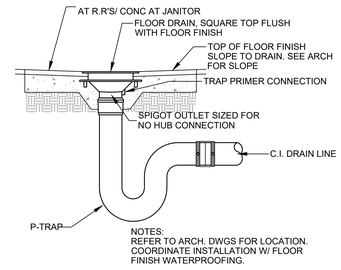

4 P4.0 FLOOR DRAIN DETAIL

SCALE: NO SCALE

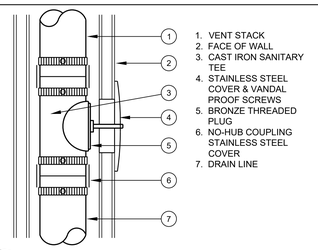

5 P4.0 WALL CLEAN OUT DETAIL

SCALE: NO SCALE

FOR MORE INFORMATION ON STRUCTURAL SUPPORT SEE STRUCTURAL PLANS SHEET 33/S022

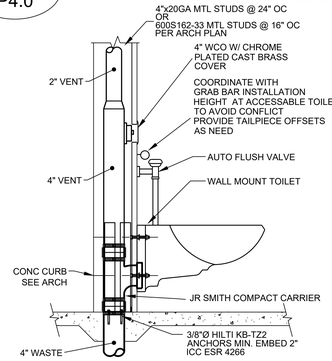

NOTE:
SEE ARCH DRAWINGS FOR ACCESSIBILITY REQUIREMENTS.

6 P4.0 WATER CLOSET DETAIL

SCALE: NO SCALE

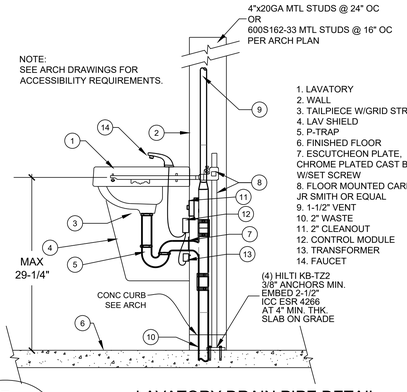

7 P4.0 LAVATORY DRAIN PIPE DETAIL

SCALE: NO SCALE

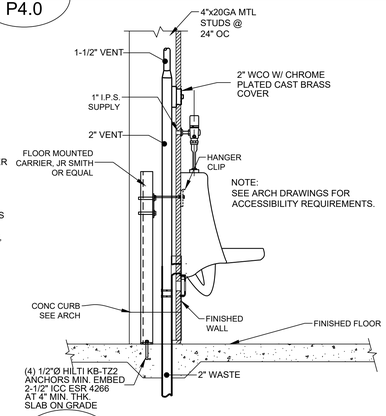

8 P4.0 URINAL DETAIL

SCALE: NO SCALE

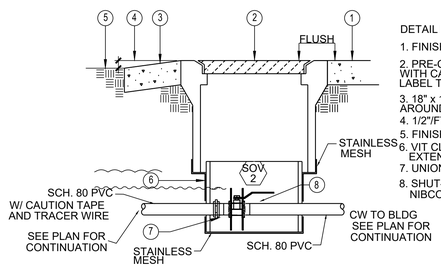

DETAIL NOTES

1. FINISHED SURFACE SEE ARCH
2. PRE-CAST CONCRETE BOX WITH CAST IRON COVER. LABEL THE COVER "WATER".
3. 18" x 18" CAST CONC. AROUND IN UNPAVED AREA.
4. 1/2"/FT SLOPE.
5. FINISHED GRADE.
6. VIT CLAY OR PVC EXTENSION SLEEVE.
7. UNION.
8. SHUT-OFF VALVE NIBCO MODEL S-695-YLF.

9 P4.0 WATER SHUT OFF VALVE

SCALE: NO SCALE

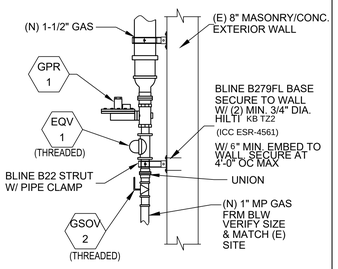

10 P4.0 GAS SUPPLY DETAIL

SCALE: NO SCALE

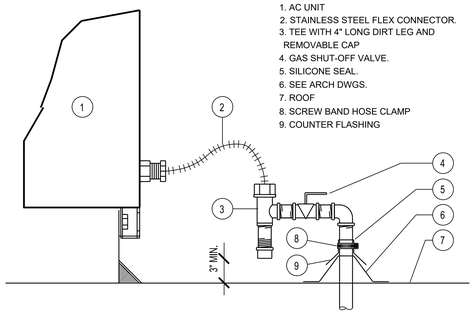

11 P4.0 AC UNIT GAS SUPPLY DETAIL

SCALE: NO SCALE

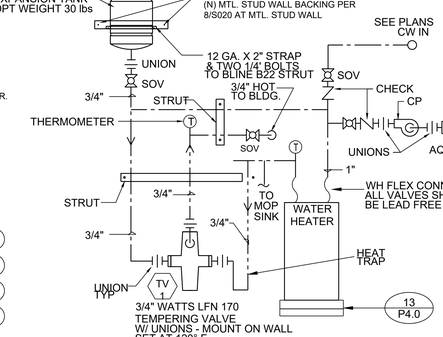

12 P4.0 WATER HEATER PIPING DETAIL

SCALE: NO SCALE

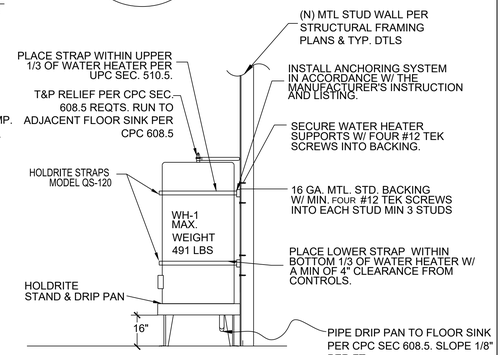

13 P4.0 WATER HEATER ANCHORAGE DETAIL

SCALE: NO SCALE

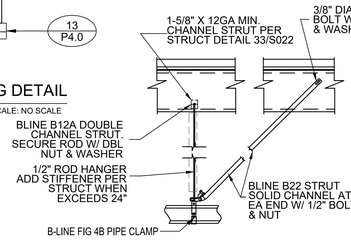

FOR MORE INFORMATION ON STRUCTURAL SUPPORT SEE STRUCTURAL PLANS SHEET 33/S022 AND 16/S021

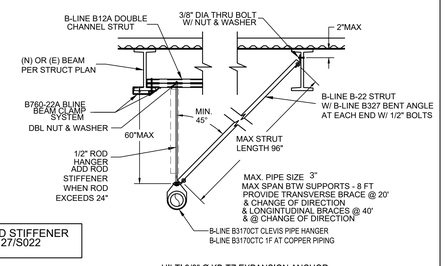

FOR MORE INFORMATION ON ROD STIFFENER SEE STRUCTURAL PLANS SHEET 27/S022

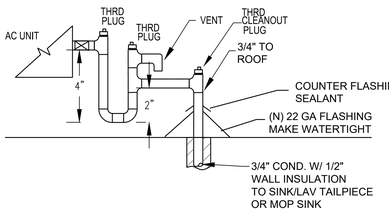

NOTES:

1. SLOPE 1/8" PER FOOT TO ROOF RECEIVER
2. ALL CONDENSATE PIPING SHALL BE TYPE L COPPER W/ SOLDERED WROT COPPER OR BRASS FITTINGS
3. INSTALL CLEANOUTS PER CODE.
4. PIPING SHALL BE INSTALLED BELOW ROOF.

15 P4.0 CONDENSATE P-TRAP DETAIL

SCALE: NO SCALE

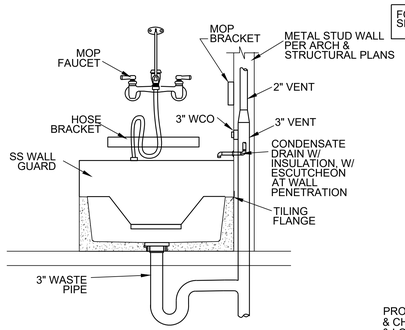

16 P4.0 MOP SINK DETAIL

SCALE: NO SCALE

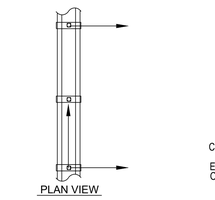

PROVIDE TRANSVERSE BRACE @ 20' & CHANGE OF DIRECTION & LONGINTUDINAL BRACES @ 40' & @ CHANGE OF DIRECTION

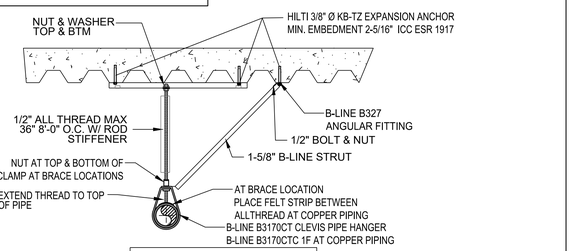

PIPE SUPPORT OPTION FOR CENTER OF THE BUILDING ONLY

17 P4.0 PIPE SUPPORT DETAIL

SCALE: NO SCALE

ELKAY SPECIFICATIONS

Elkay ezH2O Bottle Filling Station & Versatile Bi-Level ADA Vandal-Resistant Cooler
Filtered Non-Refrigerated Stainless
Model LZSTLDDWSVRSK

IMPORTANT!
INSTALLER PLEASE NOTE :
This water cooler has been designed and built to provide water to the user which has not been altered by materials in the cooler waterways. The grounding of electrical equipment such as telephone, computer, etc. to water lines is a common procedure. The grounding may be in the building but may also occur away from the building. This grounding can cause electrical feedback into a water cooler creating an electrolysis which crisides a metallic taste or causes an increase in the metal content of the water. This condition is avoidable by installing the cooler using the proper materials as shown below.

NOTICE
This water cooler must be connected to the water supply using a dielectric coupling. The cooler is furnished with a non-metallic strainer which meets this requirement. The drain trap which is provided by the installer should also be plastic to completely isolate the cooler from the building plumbing system:
Bottle filler unit on bracket attached to wall by 6 holes (as shown). Water and electrical will connect through pre-punched hole in basin.
These products are designed to operate on 20 psi to 105 psi supply line pressure. Simultaneous operation of both bubblers on a bi-level unit may not be possible depending on water supply pressure. If simultaneous operation is desired, please ensure a minimum of 65 psi supply.

OPERATION OF QUICK CONNECT FITTINGS

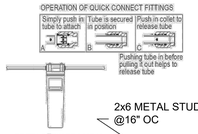

ROUGH-IN FOR LEFT-HAND HIGH SIDE MODELS

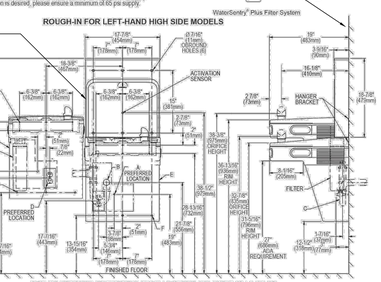

LEGEND: REDUCE HEIGHT BY 3 INCHES FOR INSTALLATION OF CHILDRENS ADA COOLER
A = Recommended Water Supply location. Shut-off Valve (not furnished) to accept 3/8" O.D. unplated copper tube. Up to 3" (76mm) maximum out from wall.
B = Recommended Waste Outlet location. To accommodate 1-1/2" nominal drain. Drain stub 2" (51mm) out from wall.
C = 1-1/2" Trap (not furnished).
D = Electrical Supply (3) Wire Recessed Box Duplex Outlet.
E = Insure proper ventilation by maintaining 6" (152mm) minimum clearance from cabinet louvers to wall.
F = 7/16" (11mm) Bolt Holes for fastening to wall.
Note : New Installations Must Use Ground Fault Circuit Interrupter (GFCI). It is highly recommended that the circuit be dedicated and the load protection be sized for 20 amps.

NOTE:
PROVIDE ANCHORS PER MANUF. AT EVERY MOUNTING LOCATIONS (OR #14 SMS TO (N) MTL. STUD WALL BACKING PER 8/S020 AT MTL. STUD WALL

In keeping with our policy of continuing product improvement, Elkay reserves the right to change product specifications without notice. Please visit elkay.com for the most current version of Elkay product specification sheets. This specification describes an Elkay product with design, quality, and functional benefits to the user. When making a comparison of other producers' offerings, be certain these features are not overlooked.

Elkay REV 03102022 LZSTLDDWSVRSK | 1333 Butterfield Road, Suite 200 Downers Grove, IL 60515 | © 2022 Page 3 | LZSTLDDWSVRSK_spec.pdf

15 P4.0 DRINKING FOUNTAIN DETAIL

SCALE: NO SCALE

DIVISION OF THE STATE ARCHITECT
IDENTIFICATION STAMP
DIV. OF THE STATE ARCHITECT
APP: 03-123218 INC:
REVIEWED FOR
SS ☑ FLS ☑ ACS ☑
DATE: 07/11/2024

AMADOR WHITTLE ARCHITECTS, INC.
28328 AGOURA ROAD, SUITE 203
AGOURA HILLS, CA 91301
(805) 530-3938 , (818) 874-0071

Ventura County Community College

PROJECT TITLE
ADMINISTRATION BUILDING RENOVATION

7075 CAMPUS ROAD
MOORPARK, CA 91320

CONSULTANT

AE Group
Mechanical Engineers
838 East Front Street
Ventura, California 93001-2925
(805) 653-1722
hugh@aegroupme.com

STAMPS/SEALS

REGISTERED PROFESSIONAL ENGINEER HUGH A. MCTERNAN M030626 Ren. 6/30/24 STATE OF CALIFORNIA

LICENSED ARCHITECT JEAN ANN AMADOR C-22205 APRIL 30, 2025 DATE STATE OF CALIFORNIA

SHEET TITLE:

PLUMBING DETAILS

PROJECT NO:	PROJECT ARCH
DRAWN: JS/HM	CHECKED: HM/PW/TP

SHEET NUMBER:

P4.0

DATE: 12/22/23 SHEET: ___ OF ___

IF THIS SHEET IS NOT 30" X 42", IT IS NOT FULL SIZE, SCALE ACCORDINGLY

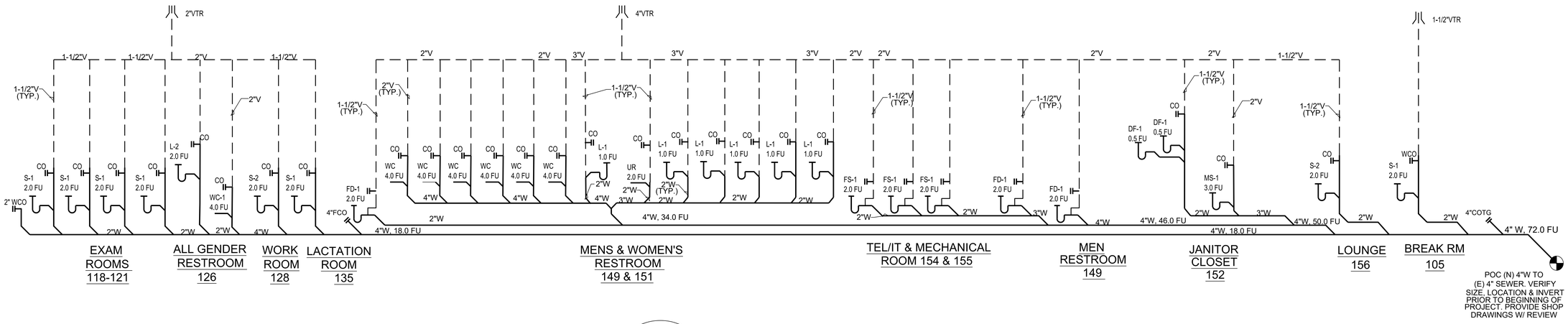

1 / P5.0 WASTE & VENT DIAGRAM

SCALE: NO SCALE

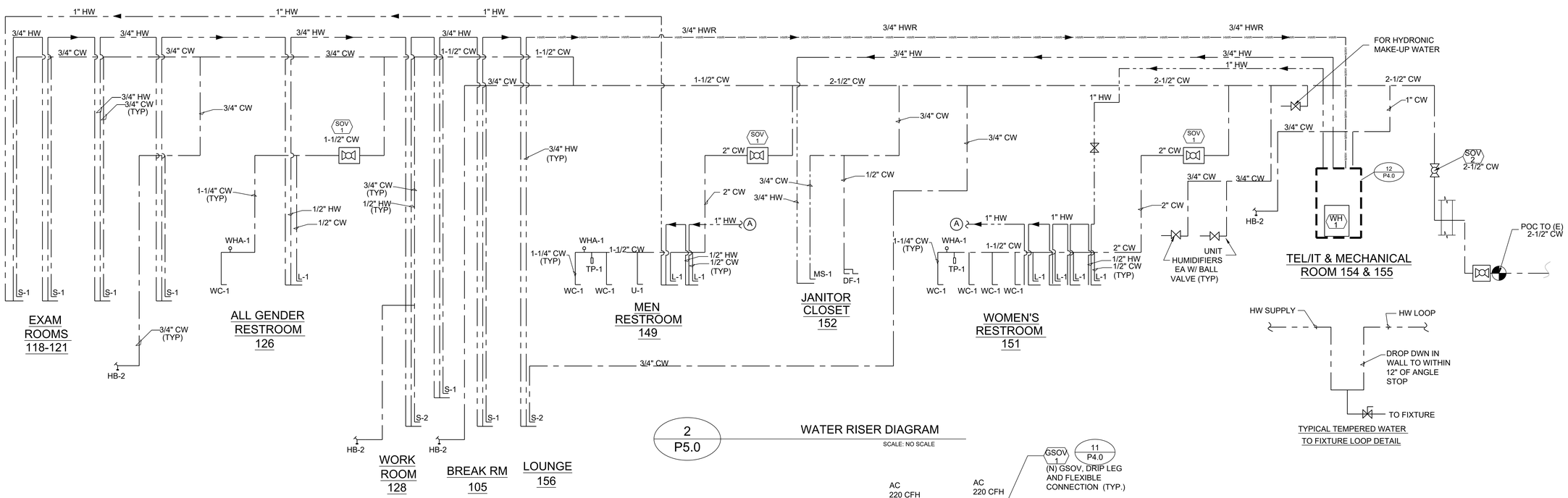

2 / P5.0 WATER RISER DIAGRAM

SCALE: NO SCALE

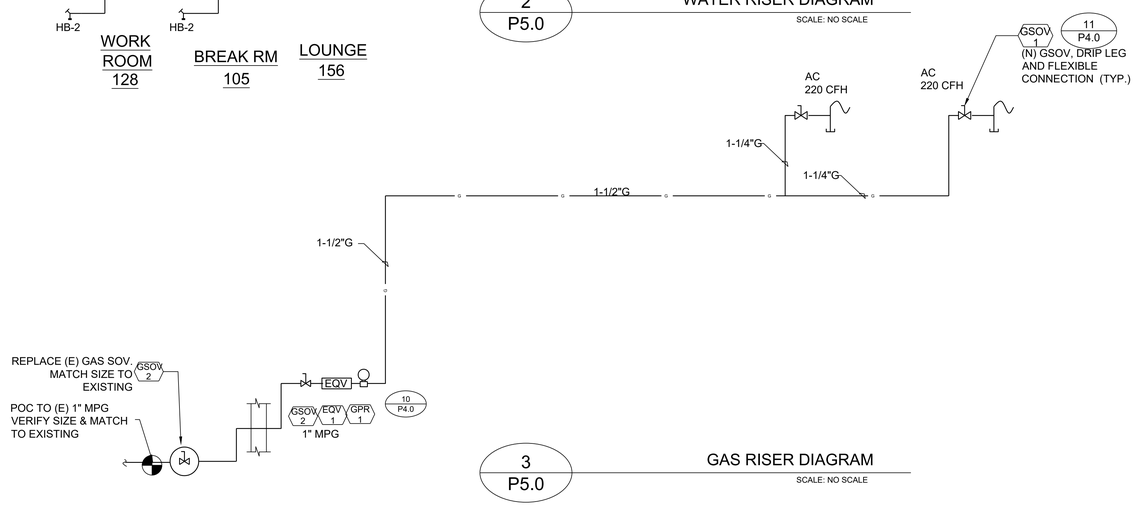

3 / P5.0 GAS RISER DIAGRAM

SCALE: NO SCALE

DIVISION OF THE STATE ARCHITECT

IDENTIFICATION STAMP
DIV. OF THE STATE ARCHITECT
APP: 03-123218 INC:
REVIEWED FOR
SS ☑ FLS ☑ ACS ☑
DATE: 07/11/2024

AMADOR WHITTLE ARCHITECTS, INC.
28328 AGOURA ROAD, SUITE 203
AGOURA HILLS, CA 91301
(805) 530-3938 , (818) 874-0071

Ventura County Community College

PROJECT TITLE

ADMINISTRATION BUILDING RENOVATION

7075 CAMPUS ROAD
MOORPARK, CA 91320

CONSULTANT

AE Group
Mechanical Engineers
838 East Front Street
Ventura, California 93001-2925
(805) 653-1722
hugh@aegroupme.com

STAMPS/SEALS

REGISTERED PROFESSIONAL ENGINEER HUGH A. McTERNAN M030626 Ren. 6/30/24 STATE OF CALIFORNIA

LICENSED ARCHITECT JEAN ANN AMADOR C-22205 APRIL 30, 2025 DATE STATE OF CALIFORNIA

SHEET TITLE:

PLUMBING RISER DIAGRAMS

PROJECT NO:	PROJECT ARCH:
DRAWN: JS/HM	CHECKED: HM/PM/TP

SHEET NUMBER:

P5.0

DATE: 12/22/23 SHEET: ____ OF ____

IF THIS SHEET IS NOT 30" X 42", IT IS NOT FULL SIZE, SCALE ACCORDINGLY

PATHNAME: G:\21\375\EL\Sheets   DRAWING FILENAME: 21-375E100   DRAFTER: CM02   DATE: 3 January 2024   TIME: 11:50 am

GENERAL NOTES

A. GENERAL

1. SCOPE
THE DRAWINGS AND THESE GENERAL NOTES DESCRIBE THE SCOPE OF WORK AND SYSTEMS. THE MATERIAL REQUIRED FOR THE WORK SHALL BE CONTRACTOR FURNISHED AND CONTRACTOR INSTALLED, UNLESS SPECIFICALLY NOTED OTHERWISE. THE WORK INCLUDES BUT IS NOT LIMITED TO THE FOLLOWING PRINCIPAL SYSTEMS AND EQUIPMENT. ALL ITEMS NOTED ON THE PLAN WHICH ARE NOT EXPLICITLY STATED AS EXISTING SHALL BE NEW.

2. PERMITS AND CHARGES
OBTAIN AND PAY FOR ALL NECESSARY CONSTRUCTION PERMITS, INSPECTION FEES, AND OTHER CHARGES BY AGENCIES HAVING JURISDICTION.

3. REGULATIONS AND CODES
PROVIDE AND INSTALL ALL MATERIALS IN CONFORMANCE WITH THE 2022 C.E.C., CALIFORNIA ADMINISTRATIVE CODE TITLE 8, AND OTHER CODES AND REGULATIONS HAVING JURISDICTION. INSTALL ALL EQUIPMENT IN ACCORDANCE WITH THE REQUIREMENTS OF THE INSPECTING AUTHORITY AND THE MANUFACTURERS RECOMMENDATIONS.

4. VERIFYING EXISTING CONDITIONS
BEFORE SUBMITTING BID, BECOME THOROUGHLY FAMILIAR WITH ACTUAL EXISTING CONDITIONS AT THE BUILDING. THE INTENT OF THE WORK IS SHOWN ON THE DRAWINGS AND DESCRIBED HEREINAFTER. BY THE ACT OF SUBMITTING A BID PROPOSAL FOR THE WORK, THE CONTRACTOR SHALL BE DEEMED TO HAVE MADE SUCH STUDY AND EXAMINATION AND TO ACCEPT ALL CONDITIONS PRESENT AT THE SITE. NO REQUEST FOR ADDITIONAL PAYMENT WILL BE CONSIDERED AS VALID, DUE TO FAILURE TO ALLOW FOR CONDITIONS WHICH MAY EXIST.

5. COORDINATION
COORDINATE ALL WORK WITH OTHER TRADES. OBTAIN ALL DRAWINGS THAT WILL REQUIRE COORDINATION AND PROVIDE ALL ELECTRICAL CONNECTION REQUIRED WHETHER SHOWN ON ELECTRICAL DRAWINGS OR NOT. ELECTRICAL EQUIPMENT LOCATIONS INDICATED ARE SHOWN DIAGRAMMATICALLY, EXACT LOCATION SHALL BE VERIFIED. SCALING OFF OF DRAWINGS SHALL BE DONE AT CONTRACTORS RISK. DO NOT SCALE DEVICES, LIGHTING FIXTURES OR ANY EQUIPMENT FROM PLANS. LIGHTING FIXTURE QUANTITIES AND LENGTHS SHALL BE CONTRACTORS RESPONSIBILITY. FIXTURES ARE SHOWN FOR CIRCUITING ONLY. CONTRACTOR TO VERIFY SIZES & QUANTITIES PRIOR TO BID.

6. SERVICE CONTINUITY
UNINTERRUPTED EXISTING ELECTRICAL POWER SHALL BE MAINTAINED TO OTHER TRADES FOR TEMPORARY POWER AREAS OF THE SITE DURING CONSTRUCTION. PROVIDE ANY TEMPORARY SERVICES AS MAY BE REQUIRED. IDENTIFY AT BID TIME, ALL WORK TO BE DONE ON PREMIUM TIME AND THE TOTAL OVERTIME MAN-HOURS REQUIRED FOR COMPLETION.

7. AS BUILT
PROVIDE RECORD DRAWINGS IN ACAD TO THE OWNER WITH ALL CHANGES NOTED THEREON AT THE COMPLETION OF THE PROJECT. RECORD DRAWINGS SHALL BE SIGNED AND DATED BY CONTRACTOR PRIOR TO RELEASE OF FINAL RETENTION OF ALL MONIES.

8. GUARANTEE
CONTRACTOR SHALL UNCONDITIONALLY GUARANTEE ALL LABOR AND MATERIALS ON ALL WORK AGAINST DEFECTS IN WORKMANSHIP AND MATERIALS FOR A PERIOD OF ONE YEAR.

9. SHOP DRAWINGS
SUBMIT SHOP DRAWINGS AND MATERIAL LIST FOR REVIEW PRIOR TO COMMENCING ANY WORK. ALL EQUIPMENT TO BEAR U.L. LABEL OR THAT OF ANOTHER ACCEPTABLE TESTING LABORATORY. SHOP DRAWINGS MUST BE STAMPED BY THE CONTRACTOR FOR CONFORMANCE PRIOR TO SUBMITTAL. SUBMIT THREE HARD COPY SETS OF SHOP DRAWINGS FOR REVIEW PRIOR TO PURCHASING ALL BREAKER MOUNTING HARDWARE, DISCONNECT SWITCHES, FUSES, CONTROLLERS, LIGHTING FIXTURES, LIGHT SWITCHES, RECEPTACLES, ETC.

10. CONTRACTOR BID
CONTRACTOR'S BID SHALL BE BASED ON ALL WORK SHOWN ON THE PLANS AND AS SPECIFIED. IF CONTRACTOR PROPOSES TO SUBSTITUTE FOR EQUIPMENT SPECIFIED, HE SHALL SUBMIT HIS REQUEST FOR CONSIDERATION OF THE OWNER AND ENGINEER PRIOR TO BID IN WRITING. ALL SUBSTITUTIONS MUST BE REVIEWED BY THE ENGINEER IN WRITING. SUCH REVIEW SHALL NOT RELIEVE THE CONTRACTOR COMPLYING WITH THE REQUIREMENTS OF THE DRAWINGS AND SPECIFICATIONS, AND THE CONTRACTOR SHALL BE RESPONSIBLE AT HIS OWN EXPENSE FOR ANY CHARGES RESULTING FROM HIS PROPOSED SUBSTITUTIONS WHICH AFFECT OTHER PARTS OF HIS OWN WORK, THE OWNER, ENGINEER OF RECORD OR THE WORK OF OTHER CONTRACTORS.

B. MATERIAL AND INSTALLATION
ALL WORK AND MATERIAL SHALL CONFORM TO THE LATEST RULES OF THE GOVERNING ELECTRICAL CODE AND INSTALLATION SHALL BE OF THE LATEST INDUSTRY STANDARDS OF WORKMANSHIP.

ALL INSTALLED MATERIALS AND EQUIPMENT SHALL BE LISTED U.L., NRTL OR LISTED AND APPROVED BY AN APPROVED TESTING LABORATORY.

1. CONDUITS
CONDUIT SHALL BE EMT, PVC, IMC, RIGID OR FLEXIBLE STEEL TYPE. CONDUIT SHALL BE MANUFACTURED IN ACCORDANCE WITH UL-1. A GROUND WIRE IS REQUIRED IN ALL FLEXIBLE CONDUIT AND UNDERGROUND CONDUIT. BUSHINGS SHALL BE INSTALLED ON ALL COMMUNICATION, TELEPHONE & SPEAKER CONDUITS. PROVIDE 3/16" NYLON PULL STRING IN ALL EMPTY CONDUITS. NO MC, BX OR AC90 SHALL BE PERMITTED (EXCEPT 6'-0" MAXIMUM STEEL MC FOR LIGHTING FIXTURE DROPS). FLEXIBLE STEEL CONDUIT RUNS SHALL BE LIMITED TO A MAXIMUM LENGTH OF 6 FOOT. ALL CONNECTIONS SHALL BE COMPRESSION & NOT SCREW TYPE.

2. SWITCHES AND RECEPTACLES
PROVIDE 20AMP NEMA RATED SWITCHES AND RECEPTACLES OF SPECIFICATION GRADE. ALL SWITCHES SHALL BE RATED FOR 120 AND/OR 277 VOLT AND RECEPTACLES SHALL BE NEMA 5-20R. IN ALL OFFICES AND OFFICE AREAS DEVICES SHALL BE DECORA SERIES TYPE WITH COLOR SELECTION BY CONTRACTOR/OWNERS REPRESENTATIVE.

3. FEEDERS AND BRANCH CIRCUITS IDENTIFICATION
IDENTIFY FEEDERS WITH THE CORRESPONDING CIRCUIT DESIGNATION AT THE OVER-CURRENT DEVICE, LOAD END, AND IN PULL BOXES WITH E-Z CODE OR OTHER APPROVED WIRE MARKER. IDENTIFY BRANCH CIRCUITS WITH I.D. MARKERS, THE CORRESPONDING CIRCUIT DESIGNATION AT THE OVER-CURRENT DEVICE, AT ALL SPLICES, IN JUNCTION BOXES, AND IN OUTLETS. USE PLASTIC COATED SELF-STICKING MARKERS SUCH AS THOMAS & BETTS E-Z CODE FOR IDENTIFICATION OF CONDUCTORS. IDENTIFY SIGNAL & COMMUNICATION CABLES AT TERMINAL AND OUTLET UNIQUELY WITH PERMANENT LABELING.

4. CONDUCTORS
DELIVER ALL CONDUCTORS TO THE JOB SITE IN ORIGINAL UNBROKEN CARTON OR REEL, PROPERLY TAGGED WITH U.L. LABEL, SIZE, TYPE, MANUFACTURER, TRADE NAME AND THE DATE OF MANUFACTURE. (MUST BE MANUFACTURED WITHIN 6 MONTHS) PROVIDE COPPER CONDUCTORS #12 AWG MINIMUM UNLESS SPECIFICALLY NOTED OTHERWISE ON THE DRAWINGS. PROVIDE STRANDED COPPER CONDUCTORS FOR ALL WIRING. USE CONDUCTORS WITH 90°C THHN/THWN 600 VOLTS INSULATION, UNLESS OTHERWISE NOTED. CONDUCTOR SIZE NO.1 AWG AND SMALLER WITH 90 DEGREE C INSULATION ARE TO USE THE 60 DEGREE COLUMN OF THE CODE, TABLE 310-16, TO DETERMINE AMPACITY. CONDUCTORS #1/0 AWG AND LARGER WITH 75 DEGREE AND 90 DEGREE INSULATION ARE TO USE THE 75 DEGREE COLUMN OF CODE, TABLE 310-16, TO DETERMINE AMPACITY. (110.14C) WHERE THE NUMBER OF CONDUCTORS IN A RACEWAY OR CABLE EXCEEDS THREE, THE ALLOWABLE AMPACITY OF EACH CONDUCTOR SHALL BE REDUCED PER TABLE 310.15(B)(3)(a).

5. LIGHTING FIXTURES
PROVIDE LIGHTING FIXTURES WITH ELECTRONIC DRIVERS PER SCHEDULE. NO SUBSTITUTIONS OF FIXTURES SHALL BE PROVIDED WITHOUT THE APPROVAL OF THE ENGINEER -OF-RECORD.

6. PANELBOARDS (BID SQUARE D; SITE STANDARD)
DISTRIBUTION AND LIGHTING PANELBOARDS WITHIN PROJECT AREA SHALL BE OF THE COPPER BUS THREE PHASE, FOUR WIRE DISTRIBUTED PHASING TYPE. CIRCUITING SHALL BE ARRANGED TO PROVIDE, AS NEARLY AS POSSIBLE, AN EVENLY BALANCED LOAD ON ALL PHASES. PANELBOARDS SHALL BE BOLT-ON CIRCUIT BREAKER TYPE. AVAILABLE FAULT CURRENT IS STATED ON PANELBOARD SCHEDULE. PROVIDE PANEL IDENTIFICATION NAMEPLATE (ENGRAVED ON-ADHESIVE 1/2" MINIMUM LETTERS) AND TYPEWRITTEN LIST OF CIRCUITS IN THE DIRECTORY FRAME. PROVIDE HINGED PANEL COVERS.

7. STRUCTURAL SUPPORT
EACH SECTION OF FLOOR MOUNTED SWITCHBOARD, DISTRIBUTION BOARD, MCC, ETC. SHALL BE BOLTED TO THE CONCRETE HOUSEKEEPING PAD USING (6) 3/4"-10 GRADE 2 BOLTS AND CONICAL WASHERS TORQUED TO 70LB-FT. PROVIDE MINIMUM 4000 PSI STRENGTH CONCRETE BELOW ALL FLOOR MOUNTED ELECTRICAL EQUIPMENT. TIE THE TOP OF ALL FLOOR MOUNTED ELECTRICAL EQUIPMENT TO THE BUILDING STRUCTURE IN A SEISMICALLY APPROVED MANNER.

8. ELECTRICAL CERTIFICATION
"ELECTRICIANS" PERFORMING WORK ON THIS PROJECT SHALL BE CURRENTLY CERTIFIED IN ACCORDANCE WITH THE STATE OF CALIFORNIA AB931 AND THE DIVISION OF APPRENTISHIP STANDARDS SECTION 3099.

C. DEMOLITION
1. NOTIFY THE OWNER IMMEDIATELY WHEREVER EXISTING EQUIPMENT IS ENCOUNTERED WHICH MUST BE RELOCATED DUE TO THE NEW CONSTRUCTION, AND WHICH IS NOT INDICATED ON THE PLANS.
2. ALL REMOVED MATERIALS AND EQUIPMENT WHICH ARE SALVAGEABLE SHALL REMAIN THE PROPERTY OF THE OWNER. DELIVER SUCH SALVAGED MATERIALS AND EQUIPMENT ON THE PREMISES AS DIRECTED BY OWNER, AND NEATLY PILE OR STORE THEM AND PROTECT FROM DAMAGE. REMOVE FROM PREMISES AND DISPOSE OF ALL MATERIALS CONSIDERED BY THE OWNER TO BE SCRAP.
3. ALL DEVICES, CIRCUITS CONDUCTORS, FEEDERS ETC., WHEN NOTED TO BE REMOVED, SHALL BE REMOVED TO THE LAST ACTIVE DEVICE. ALL OVER-CURRENT PROTECTION AND DISCONNECT DEVICES NO LONGER UTILIZED BUT REMAINING AS LAST ACTIVE DEVICE SHALL BE LABELED AS 'SPARE'. COORDINATE ALL OUTAGES WITH OWNERS REPRESENTATIVE.
4. DISCONNECT AND MAKE SAFE ALL ELECTRICAL SYSTEMS ON SITE AND IN WALL, FLOORS, AND CEILINGS SCHEDULED FOR REMOVAL.
5. REMOVE, RELOCATE, AND EXTEND EXISTING INSTALLATIONS TO ACCOMMODATE NEW CONSTRUCTION.
6. REMOVE ABANDONED WIRING TO SOURCE OF SUPPLY AND RE-LABEL DEVICES AS SPARES.
7. REMOVE ABANDONED CONDUIT, INCLUDING ABANDONED CONDUIT ABOVE ACCESSIBLE CEILING FINISHES. CUT CONDUIT FLUSH WITH WALLS AND FLOOR, AND PATCH SURFACES.
8. DISCONNECT ABANDONED OUTLETS AND REMOVE DEVICES. REMOVE ABANDONED OUTLETS IF CONDUIT SERVICING THEM IS ABANDONED AND REMOVE. PROVIDE BLANK COVER FOR ABANDONED OUTLETS WHICH ARE NOT REMOVED.
9. DISCONNECT AND REMOVE ABANDONED LUMINAIRES. REMOVE BRACKETS, STEMS, HANGERS, AND OTHER
10. REPAIR ADJACENT CONSTRUCTION AND FINISHES DAMAGED DURING DEMOLITION AND EXTENSION WORK
11. MAINTAIN ACCESS TO EXISTING ELECTRICAL INSTALLATIONS WHICH REMAIN ACTIVE. MODIFY INSTALLATION OR PROVIDE ACCESS PANEL AS APPROPRIATE.
12. BEGINNING OF DEMOLITION MEANS CONTRACTOR ACCEPTS EXISTING CONDITIONS.

D. EXECUTION
1. CAREFULLY PROTECT ALL WALLS, TRIM, FLOORS, EQUIPMENT UTILITY LINES AND MATERIALS. WHEN WORKING ON FINISHED SURFACES, LIMIT DAMAGE TO THE CONFINES AS MUCH AS POSSIBLE AND RESTORE TO THE ORIGINAL CONDITION ALL SURFACES WHICH ARE DAMAGED BECAUSE OF THE INSTALLATION OF THIS WORK.
2. EQUIPMENT, MATERIALS AND SUPPLIES REMOVED FOR PROTECTION SHALL BE REPLACED IN ORIGINAL LOCATIONS. ANY MATERIALS DAMAGED SHALL BE REPLACED WITH NEW MATERIALS OF LIKE KIND AND QUALITY.
3. DO ALL DRILLING, CUTTING, CHANNELING AND PATCHING REQUIRED TO INSTALL ELECTRICAL WORK AS INDICATED OR HEREIN SPECIFIED. ALL HOLES, CURBS, ETC., IN FLOORS, CEILINGS AND WALLS SHALL BE PATCHED, UNLESS INDICATED OTHERWISE. PAINT ALL NEW ELECTRICAL RACEWAYS, CABINETS, ENCLOSURES AND FITTINGS PENETRATING INTO FIRE RATED ENVELOPES, SPACES, ETC.
3. ALL CONDUIT RUNS SHALL BE CONCEALED, UNLESS SHOWN OTHERWISE. PROVIDE A PULL WIRE IN ALL EMPTY CONDUITS.
4. EXISTING CONDITION SHOWN IS FROM AVAILABLE RECORD DRAWINGS AND VISUAL FIELD SURVEY AND SHOWN FOR REFERENCE ONLY. CONTRACTOR SHALL VERIFY ACTUAL EXISTING CONDITION AT SITE.
5. ALL WORK SHOWN IS NEW UNLESS SPECIALLY INDICATED AS EXISTING (X). ALL ELECTRICAL EQUIPMENT MOUNTING AND ANCHORAGE MUST CONFORM WITH LOCAL AND STATE SEISMIC CODES.

E. LOW VOLTAGE SYSTEMS
PROVIDE RACEWAYS, AND ALL MATERIAL INCLUDING PULLING CABLE IN EACH RACEWAY AS REQUIRED FOR THE TELEPHONE SYSTEM PER THE TELEPHONE REQUIREMENTS. ALL CAT 6E CABLES SHALL BE TESTED & MEET CURRENT BICSI STANDARDS, A TEST REPORT SIGNED BY A RCCD SHALL BE PROVIDED WITH THE DOCUMENTATION.

F. GROUNDING & BONDING
FURNISH AND INSTALL COMPLETE BONDING AND GROUNDING SYSTEM AS REQUIRED BY CODES. CONTINUITY OF GROUNDING SHALL BE MAINTAINED MECHANICALLY AND ELECTRICALLY THROUGHOUT THE SYSTEM. A GREEN GROUNDING CODE SIZED CONDUCTOR SHALL BE CARRIED IN ALL CONDUITS.

G. INSTALLATION
1. IT IS THE INTENT OF THESE PLANS AND SPECIFICATIONS THAT A COMPLETE AND WORKABLE ELECTRICAL INSTALLATION BE PROVIDED FOR ALL THE EQUIPMENT DESCRIBED OR SHOWN AS BEING IN THIS CONTRACT. TOWARD THIS END FURNISH ALL LABOR AND TOOLS NECESSARY AND FURNISH AND INSTALL ALL APPARATUS, MATERIALS AND EQUIPMENT IN A FASHION COMPLYING WITH ALL APPLICABLE CODES, INCLUDING ITEMS REQUIRED BUT NOT NORMALLY SHOWN, SUCH AS LAMPS, COUPLINGS, HANGERS, BRACKETS, CLAMPS, BOXES, CONNECTORS AND HARDWARE. REFER ALSO TO WRITTEN SPECIFICATIONS FOR GENERAL, MECHANICAL AND ELECTRICAL SECTIONS.
2. PROCURE ALL PERMITS FROM LEGALLY CONSTITUTED AUTHORITIES, ARRANGE FOR ALL INSPECTIONS AND PAY ALL COSTS FOR FEES AND TESTS IN CONNECTION THEREWITH. COMPLY WITH CODES: NOTHING IN THESE PLANS AUTHORIZES DEVIATION FROM APPLICABLE CODES.
3. DETERMINE EXACT ROUTING OF CONCEALED FEEDERS AND BRANCH HOMERUNS IN COOPERATION WITH OTHER TRADES TO SIMPLIFY INSTALLATION WHEREVER POSSIBLE BUT SUBJECT TO APPROVAL OF ARCHITECT FOR VISUAL AND STRUCTURAL REASONS.
4. PROVIDE A CODE APPROVED DISCONNECT SWITCH OR BREAKER WITHIN SIGHT OF EVERY MOTOR AND FEED MOTORS NOT EQUIPPED WITH "BUILT IN" PROTECTION THROUGH A MAGNETIC OR MANUAL STARTER WITH OVERLOAD HEATERS SIZED TO COMPLY WITH MOTOR MANUFACTURER'S RECOMMENDATIONS AND APPLICABLE CODES.
5. FOR CONNECTIONS TO EXHAUST FANS, PUMPS, COMPRESSORS, SPACE HEATERS, WATER HEATERS, AQUASTATS, SOLENOID VALVES AND OTHER MECHANICAL EQUIPMENT AND FOR CONDUITS AND WIRE REQUIRED BUT NOT NECESSARILY SHOWN ON THESE DRAWINGS REFER TO MECHANICAL PLANS AND DETERMINE EXACT LOCATIONS UNDER DIRECTION OF HEATING AND VENTILATING CONTRACTOR.
6. DO NOT RUN ANY CONDUIT IN SLAB IF ITS OUTSIDE DIAMETER EXCEEDS 1/3 THE THICKNESS OF THE SLAB. LOCATE CONDUITS WITHIN THE MIDDLE OF THE SLAB. WHERE CONDUITS ARE GROUPED IN PARALLEL RUNS, SPACE THEM 3" OR MORE APART. WHERE CONDUITS CROSS EACH OTHER, THICKEN SLAB PROPORTIONATELY OVER A HORIZONTAL AREA EQUAL TO TEN TIMES THE DIAMETER OF THE LARGEST CONDUIT. REFER ALSO TO DETAILS SHOWN..
7. SIZE OUTLET BOXES IN CONFORMITY WITH CODE FOR NUMBER AND GAUGE OF CONDUCTORS THEREIN, EXCEPT WHERE NOTED TO BE LARGER. MINIMUM BOX SIZE SHALL BE 4" SQUARE BY 1-1/2" DEEP.
8. ALL ELECTRICAL WORK SHALL BE INSTALLED SO AS TO BE READILY ACCESSIBLE FOR OPERATING, SERVICING, MAINTAINING AND REPAIRING. ALL CONDUIT SHALL BE CONCEALED WHERE POSSIBLE. EXPOSED CONDUIT SHALL BE IN STRAIGHT LINES PARALLEL WITH, OR AT RIGHT ANGLES TO, COLUMN LINES OR BEAMS AND SEPARATED BY AT LEAST THREE (3) INCHES FROM WATER LINES WHENEVER THEY RUN LONG SIDE OR ACROSS SUCH LINES. CONDUIT SHALL NOT BE RUN BELOW CABLE TRAYS OR LIGHT FIXTURES WITHOUT SPECIFIC APPROVAL OF THE OWNERS REPRESENTATIVE. HANGERS SHALL BE FASTENED TO STEEL, CONCRETE OR MASONRY, BUT NOT TO PIPING. HANGERS AND SUPPORT SYSTEMS ARE AN INTEGRAL PART OF THE VISUAL ENVIRONMENT. ALL HANGERS AND SUPPORTS EXPOSED TO PUBLIC VIEW MUST BE SHOWN IN DETAIL ON PLANS SUBMITTED TO ENGINEER FOR APPROVAL OF APPEARANCE. ALL HANGERS MUST BE UNIFORMLY SPACED AND NEATLY INSTALLED WITH NO EXCESS MATERIAL BEYOND WHAT IS REQUIRED FOR THE SUPPORT FUNCTION. CONTRACTOR SHALL SELECT ACCESSORIES AND HARDWARE WITH A SMOOTH, NEAT FINISHED APPEARANCE AND PAINT ALL EXPOSED CONDUIT HANGERS TO MATCH THE ADJACENT FINISHES.
9. ALL RECEPTACLES SHALL BE MOUNTED AT 18" PER ADA REQUIREMENTS UNLESS NOTED OTHERWISE, MEASURED FROM BOTTOM OF BOX.
10. ALL DISTRIBUTION BOARDS, SWITCHBOARDS AND TRANSFORMERS THAT ARE FLOOR MOUNTED SHALL BE MOUNTED ON 2" THICK HOUSEKEEPING PAD. TRANSFORMER SHALL BE ON VIBRATION ISOLATION PADS AND CONNECTED WITH FLEXIBLE CONDUIT.
11. CONTRACTOR SHALL EXAMINE PLANS AND VERIFY IN FIELD LOCATIONS OF ALL FIRE RATED WALLS, CEILINGS AND FLOORS. CONTRACTOR SHALL SEAL ALL ELECTRICAL SYSTEM PENETRATIONS THROUGH FIRE RATED WALLS, CEILINGS AND FLOORS WITH U.L. LISTED MATERIAL APPROVED BY THE AUTHORITY HAVING JURISDICTION.
12. ALL SWITCHES SHALL BE MOUNTED 36" TO 48" MEASURED FROM BOTTOM & TOP OF BOX RESPECTIVELY.
13. PANEL CIRCUIT DIRECTORY SHALL COMPLY WITH CEC 408.4.
14. PROVIDE CONCRETE SLURRY OVER ALL UNDERGROUND CONDUITS, USE ONLY CLEAN FILL.

H. ADDITIONAL NOTES
1. MARKING - UNDERGROUND SYSTEM SHALL BE LEGIBLY MARKED "UNDERGROUND SYSTEM" AT THE SOURCE OR FIRST DISCONNECTING MEANS OF THE SYSTEM. THE MARKING SHALL BE OF SUFFICIENT DURABILITY TO WITHSTAND THE ENVIRONMENT INVOLVED. (250.21)(C)
2. PROVIDE SWITCH AND RECEPTACLE HEIGHTS PER STATE OF CALIFORNIA ACCESSIBLE REQUIREMENTS.
3. THE ISSUANCE OF A PERMIT SHALL NOT PREVENT THE BUILDING OFFICIAL FROM REQUIRING THE CORRECTION OF ERRORS ON THESE PLANS OR FROM PREVENTING ANY VIOLATION OF THE CODES ADOPTED BY THE CITY, RELEVANT LAWS, ORDINANCES, RULES AND/OR REGULATIONS.
4. FOR FIRE RATED WALL/CEILING PENETRATION AND/OR MEMBRANE PENETRATION, COMPLETE NRTL CLASSIFICATION SHEETS SHALL BE PROVIDED TO THE INSPECTOR AT THE TIME OF INSPECTION FOR THE LISTED RATED ASSEMBLY.
5. EACH MULTIWIRE BRANCH CIRCUIT SHALL BE PROVIDED WITH A MEANS THAT WILL SIMULTANEOUSLY DISCONNECT ALL UNGROUNDED CONDUCTORS AT THE PANELBOARD WHERE THE BRANCH CIRCUIT ORIGINATES. (210.4)
6. MULTIWIRE BRANCH CIRCUITS SUPPLYING POWER TO THE PARTITION SHALL BE PROVIDED WITH A MEAN TO DISCONNECT SIMULTANEOUSLY ALL UNGROUNDED CONDUCTORS AT THE PANELBOARD WHERE THE BRANCH CIRCUIT ORIGINATES. (605.7)
7. PROVIDE SEPARATE SUBMITTAL; OBTAIN ALL REQUIRED PERMITS, INSPECTIONS AND APPROVALS FOR ALL FIRE ALARM SYSTEM INSTALLATIONS AND/OR MODIFICATIONS FROM THE FIRE DEPARTMENT.
8. ALL NEW OVERCURRENT DEVICES INSTALLED IN EXISTING PANELS/SWITCHBOARDS SHALL MATCH THE MAKE, MODEL AND INTERRUPTING CAPACITY OF THE EXISTING OVERCURRENT DEVICES.
9. RACEWAY SEALS. CONDUITS OR RACEWAYS THROUGH WHICH MOISTURE MAY CONTACT LIVE PARTS SHALL BE SEALED OR PLUGGED AT EITHER OR BOTH ENDS.
10. ALL 15-20 AMP 120 VOLTS, SINGLE PHASE RECEPTACLES WITHIN KITCHEN AND FOOD PREPARATION AREAS TO BE GFCI PER NEC 210.8.
11. PROVIDE LOCAL DISCONNECTS FOR ALL HARDWIRED EQUIPMENT THAT IS NOT "WITHIN SIGHT" OF THE SOURCE PANEL.
12. MULTIPLE RACEWAYS CONTAINING MORE THAN 3 CURRENT CARRYING CONDUCTORS SHALL COMPLY WITH [2016 CEC, 310.15(B)(2)(A)].
13. THE IDENTIFICATION OF EVERY CIRCUIT OF A PANEL BOARD AND SWITCHBOARD SHALL BE LEGIBLY IDENTIFIED AS TO ITS CLEAR, EVIDENT, AND SPECIFIC PURPOSE OR USE AND SHALL INCLUDE SUFFICIENT DETAIL TO ALLOW EACH CIRCUIT TO BE DISTINGUISHED FROM ALL OTHERS. 2016 C.E.C 408.4 - PROVIDE MORE DETAIL ON PANEL SCHEDULE CIRCUIT DESCRIPTIONS.
14. A SINGLE RECEPTACLE INSTALLED ON AN INDIVIDUAL BRANCH CIRCUIT SHALL HAVE AN AMPERE RATING OF NOT LESS THAN THAT OF THE BRANCH CIRCUIT. INDICATE THE RECEPTACLE RATING. (210.21(B)(1))
15. PROVIDE RECEPTACLE OUTLETS WHEREVER CORD CONNECTED EQUIPMENT WILL BE USED. (210.50(B))
16. WHERE THE DISCONNECTS ARE NOT PROVIDED WITHIN SIGHT FROM THE EQUIPMENT IT SUPPLIES, THE SWITCH OR CIRCUIT BREAKER MUST INCLUDE PROVISIONS FOR ADDING A LOCK, AND THESE PROVISIONS MUST REMAIN WITH THE EQUIPMENT. THESE LOCKING PROVISIONS HAVE TO BE PART OF THE EQUIPMENT, EITHER INHERENT TO THE EQUIPMENT DESIGN OR AS A ACCESSORY FEATURE THAT CAN BE INSTALLED ON THE EQUIPMENT. [410.141(B), 422.31(B), 424.19, 440.14 EXCEPTION NO. 1, 600.6(A)(2)(3), 620.51(A) EXCEPTION NO. 1, 620.53, 620.55]
17. STANDARD NON-LOCKING STRAIGHT-BLADE RECEPTACLES IN 120- AND 250-VOLT CONFIGURATION AT WET/DAMP LOCATION ARE REQUIRED TO BE LISTED WEATHER-RESISTANT TYPE. [CEC 406.8(A)].

I. FIRE ALARM SYSTEM
1. CONTRACTOR SHALL PROVIDE AND INSTALL A FIRE ALARM SYSTEM FOR THE PROJECT AREA TO INCLUDE:

A) SMOKE DETECTORS IN ALL REQUIRED AREAS
B) HEAT DETECTORS IN ALL REQUIRED AREAS
C) DUCT DETECTORS IN ALL REQUIRED SPACES
D) STROBES/SPEAKERS IN ALL REQUIRED AREAS
E) TAMPER AND FLOW SWITCHES

2. CONTRACTOR SHALL SUBMIT FOR THE OWNERS SIGNED APPROVAL, APPROVED FIRE DEPARTMENT FIRE ALARM DRAWINGS FOR THE PROJECT SPACE.
3. CONTRACTOR SHALL BE SITE STANDARD - EDWARDS.
4. ALL DEVICES AND EQUIPMENT SHALL BE CALIFORNIA STATE FIRE MARSHALL APPROVED AND CURRENTLY CSFM LISTED.
5. CONTRACTOR SHALL WARRANTY ALL DEVICES AND SYSTEMS FOR A PERIOD OF TWO YEARS.
6. CONTRACTOR SHALL PROVIDE 2 (TWO) HARD COPY SETS OF FIRE ALARM MANUALS FOR ALL SYSTEMS AND DEVICES IN ADDITION TO 2 (TWO) HARD COPY SETS OF A SYSTEM OPERATIONAL MANUAL TAILORED FOR THE PROJECT SPACE & ONE ELECTRONIC VERSION OF SITE & BUILDING FA PROGRAMING FOR SITE FA INTEGRATION.
7. CONTRACTOR SHALL PROVIDE AN INDIVIDUALLY ADDRESSABLE TOTALLY SUPERVISED SYSTEM WITH BATTERY BACK-UP FOR 24 HOURS OF MONITORING INITIATING CIRCUITS PLUS 30 MINUTES OF ALARM WITH DUAL RATE BATTERY CHARGER.
8. CONTRACTOR SHALL PROVIDE A SATISFACTORY SYSTEM TEST IN THE PRESENCE OF THE OWNER, FIRE PREVENTION BUREAU AND CONSULTING ENGINEER.
9. CONTRACTOR SHALL PROVIDE A CENTRAL MASTER ANNUNCIATOR PANEL IN THE ELECTRICAL ROOM AND A REMOTE PANEL IN AN AREA PER OWNERS REPRESENTATIVE AND LOCAL FIRE MARSHAL.
10. ANNUNCIATOR PANEL SHALL BE NONGRAPHIC WITH NAMEPLATE AND LED FOR EACH DEVICE ADDRESS, WITH AUDIBLE ALARM AND KEYED SILENCE SWITCH.
11. CONTRACTOR SHALL PROVIDE ALL CONNECTION TO POWER PANELS, CONDUIT AND WIRE AND CONNECTIONS REQUIRED TO PROVIDE AN OPERATIONAL FIRE ALARM SYSTEM.
12. UNIQUELY LABEL ALL ADDRESSABLE DEVICES TO MATCH FIRE ALARM PROGRAMMING & AS BUILTS. CONTRACTOR TO PROVIDE A HARD AND ELECTRONIC COPY OF ALL PROGRAMMING FOR SITE AND BUILDING CONDITION.

SYMBOLS

Symbol	Description
C	TITLE 24 RELAY CONTROLLED RECEPTACLE AT 18" AFF TO BOTTOM OF DEVICE, PROVIDE WITHIN 6'-0" OF NON CONTROLLED RECEPTACLE. PROVIDE COVER PLATE WITH ENGRAVED "CONTROLLED".
	WP GFCI RECEPTACLE AT 18" AFF TO BOTTOM OF DEVICE
	GFCI RECEPTACLE AT 42" AFF TO BOTTOM OF DEVICE
	SINGLE RECEPTACLE, WALL MOUNTED @ +18" AFF TO BOTTOM OF DEVICE, NEMA 5-20R U.O.N.
	DUPLEX RECEPTACLE, WALL MOUNTED @ +18" AFF TO BOTTOM OF DEVICE, NEMA 5-20R U.O.N.
I.G.	ISOLATED (ORANGE) GROUND DUPLEX RECEPTACLE, WALL MTD.@18"AFF, NEMA 5-20R U.O.N.
	DOUBLE DUPLEX RECEPTACLE, NEMA 5-20R, WALL MOUNTED @ +18"AFF AT BOTTOM OF DEVICE
	DUPLEX RECEPTACLE, WALL MOUNTED @ +18" TO BOTTOM OF DEVICE NEMA 5-20R U.O.N. TOP RECEPTACLE SWITCHED
	DUPLEX RECEPTACLE, FLOOR MOUNTED, NEMA 5-20R
	CLOCK/SPEAKER BY ENS-IP-SDMF WITH IP SEA-SD MOUNT, PROVIDE & INSTALLED BY CONTRACTOR WITH CAT 5 TO IDF
	DATA OUTLETS, 2 GANG COVER 4SD BOX WITH DEVICES AND 4 CAT 6 CABLES FROM JACK TO MAIN IT RACK ROOM. PROVIDE 1-1/4"C MINIMUM TO CABLE TRAY OR TO IDF IF NO CABLE TRAY IS PRESENT, J-HOOKS ALLOWED IN ACCESSIBLE CEILING
	(2)DATA OUTLETS, 2 GANG FLOOR BOX WITH DEVICES AND 2 CAT 6 CABLES PER NOTES & SPECIFICATION. PROVIDE 1-1/4"C MINIMUM TO CABLE TRAY OR IDF.
	SPECIAL OUTLET, TYPE AS REQUIRED BY EQUIPMENT.
J	JUNCTION BOX (CEILING MTD.) SIZE PER TABLE AND NEC ARTICLE 314
J	JUNCTION BOX (WALL MTD.) SIZE PER TABLE AND NEC ARTICLE 314
T	THERMOSTAT - 36" TO 48" AFF, BOTTOM & TOP OF BOX RESPECTIVELY
T	TRANSFORMER
	BRANCH CIRCUIT PANELBOARD - 120/208VAC, 3Ø, 4W.
	BRANCH CIRCUIT PANELBOARD - 480/277V, 3Ø, 4W
	4'X8'X3/4" TELEPHONE BACKBOARD, MARINE PLYWOOD AND PAINTED WITH FIRE RESISTANT PAINT, PER OWNERS REPRESENTATIVE.
	CONDUIT RUN CONCEALED ABOVE CEILING OR IN WALLS,
	CONDUIT RUN CONCEALED BELOW FLOOR OR UNDERGROUND
— 0-10 —	LIGHTING CONTROL 0-10V (PURPLE GRAY)
— C5 —	LOW VOLTAGE CABLE & CONDUIT 3/4"C-1#CAT5 U.O.N. (PER nLIGHT REQUIREMENTS)
— T —	COM CIRCUIT WITH (1) CAT 6 CABLE
— P —	POWER CONDUIT & CONDUCTORS
	FLEXIBLE CONDUIT (WITH GROUND CONDUCTOR, PROVIDE LIQUID TIGHT CONDUIT IN ALL EXPOSED AREAS)
#10	HASH MARKS INDICATE QUANTITY OF #12 CONDUCTORS. NO HASH MARKS INDICATE (2)#12AWG. (PROVIDE GROUND CONDUCTOR IN ALL CONDUITS.) WHERE NO NUMBER IS INDICATED, THE CONDUCTORS ARE #12AWG(MIN.) CONDUIT SIZE IS AS REQUIRED BY ELECTRICAL CODE. (3/4" CONDUIT MINIMUM).
2LA 1-3-5,7	INDICATES A HOMERUN TO PNL 2LA, CKTS 1-3-5 WITH SHARED NEUTRAL & CKT 7 WITH DEDICATED NEUTRAL.
	3/4"C-2#12 & 1#12 GND
	3/4"C-3#12 & 1#12 GND
	3/4"C-4#12 & 1#12 GND
	3/4"C-5#12 & 1#12 GND
#10	3/4"C-2#10 & 1#10 GND
#10	3/4"C-3#10 & 1#10 GND
#10	3/4"C-4#10 & 1#10 GND
#10	3/4"C-5#10 & 1#10 GND
	1" CONDUIT MINIMUM IF UNDERGROUND (CONTRACTOR TO PROVIDE DEDICATED NEUTRALS FOR CIRCUITS WHICH DO NOT HAVE COMMON CIRCUIT HANDLE TIES ON BREAKERS FEEDING THE CIRCUITS)
1	SEE KEY NOTE #1 AS INDICATED ON DRAWING
$ P	SWITCH WITH PILOT LIGHT @ 42"AFF
$ 3ab	3-WAY SWITCH, a & b INDICATES LIGHT FIXTURE TO BE SWITCHED (EACH A 3-WAY) MOUNTED @ 42" AFF
$	SWITCH MOUNTED @ +42" AFF
$ M	MOTOR RATED SWITCH
$ a,b,c,d	CIRCUIT SWITCH LEGS; WALL SWITCHES
WF	WIFI DEVICE IN CEILING/ON CEILING WITH 2 CAT 6 CABLES TO IDF
60AS 35AF 3P	DISCONNECT SWITCH, 60AMP SWITCH, 35 AMP FUSE, 3 POLE W/ OVERCURRENT PROTECTION U.O.N.
M	100A UTILITY METER (OR AS NOTED)
3P 100AS 60AF	FUSED DISCONNECT SWITCH 100AMP SWITCH RATING WITH 60 AMP FUSES, 3 POLE
200AF 150AT 3P	MOLDED CASE CIRCUIT BREAKER 200 AMP FRAME, 150 AMP TRIP RATING, 3 POLE
J CAM	CCTV-VERIFY MOUNTING LOCATION AND REQUIREMENTS WITH CLIENT/OWNER. PROVIDE 3/4" C AND 2 CAT 6 (VERIFY WITH CAMPUS IT) CABLE TO IDF ROOM RACK PER CAMPUS IT DEPARTMENT DIRECTION

COLOR CODE FOR CONDUCTORS

PROVIDE CONDUCTOR COLOR CODE AS FOLLOWS:
120/208VAC,3Ø,4W: BLUE,BLACK,RED FOR PHASE CONDUCTORS AND WHITE FOR NEUTRAL, GREEN FOR GROUND.

277/480VAC,3Ø,4W: ORANGE,BROWN,YELLOW FOR PHASE CONDUCTORS AND WHITE FOR NEUTRAL, GREEN FOR GROUND.

APPLICABLE CODE: 2022 CBC

MEP COMPONENT ANCHORAGE NOTE

ALL MECHANICAL, PLUMBING, AND ELECTRICAL COMPONENTS SHALL BE ANCHORED AND INSTALLED PER THE DETAILS ON THE DSA APPROVED CONSTRUCTION DOCUMENTS. THE FOLLOWING COMPONENTS SHALL BE ANCHORED OR BRACED TO MEET THE FORCE AND DISPLACEMENT REQUIREMENTS PRESCRIBED IN THE 2022 CBC SECTIONS 1617A.1.18 THROUGH 1617A.1.26 AND ASCE 7-16 CHAPTERS 13, 26, AND 30.

1. ALL PERMANENT EQUIPMENT AND COMPONENTS.
2. TEMPORARY, MOVEABLE OR MOBILE EQUIPMENT THAT IS PERMANENTLY ATTACHED (E.G., HARD WIRED) TO THE BUILDING UTILITY SERVICES SUCH AS ELECTRICITY, GAS OR WATER. "PERMANENTLY ATTACHED" SHALL INCLUDE ALL ELECTRICAL CONNECTIONS EXCEPT PLUGS FOR 110/220 VOLT RECEPTACLES HAVING A FLEXIBLE CABLE.
3. TEMPORARY, MOVABLE OR MOBILE EQUIPMENT WHICH IS HEAVIER THAN 400 POUNDS OR HAS A CENTER OF MASS LOCATED 4 FEET OR MORE ABOVE THE ADJACENT FLOOR OR ROOF LEVEL THAT DIRECTLY SUPPORT THE COMPONENT IS REQUIRED TO BE RESTRAINED IN A MANNER APPROVED BY DSA.

THE FOLLOWING MECHANICAL AND ELECTRICAL COMPONENTS SHALL BE POSITIVELY ATTACHED TO THE STRUCTURE BUT NEED NOT DEMONSTRATE DESIGN COMPLIANCE WITH THE REFERENCES NOTED ABOVE. THESE COMPONENTS SHALL HAVE FLEXIBLE CONNECTIONS PROVIDED BETWEEN THE COMPONENT AND ASSOCIATED DUCTWORK, PIPING, AND CONDUIT. FLEXIBLE CONNECTIONS MUST ALLOW MOVEMENT IN BOTH TRANSVERSE AND LONGITUDINAL DIRECTIONS:

A. COMPONENTS WEIGHING LESS THAN 400 POUNDS AND HAVE A CENTER OF MASS LOCATED 4 FEET OR LESS ABOVE THE ADJACENT FLOOR OR ROOF LEVEL THAT DIRECTLY SUPPORT THE COMPONENT.
B. COMPONENTS WEIGHING LESS THAN 20 POUNDS, OR IN THE CASE OF DISTRIBUTED SYSTEMS, LESS THAN 5 POUNDS PER FOOT, WHICH ARE SUSPENDED FROM A ROOF OR FLOOR OR HUNG FROM A WALL.

THE ANCHORAGE OF ALL MECHANICAL, ELECTRICAL AND PLUMBING COMPONENTS SHALL BE SUBJECT TO THE APPROVAL OF THE DESIGN PROFESSIONAL IN GENERAL RESPONSIBLE CHARGE OR STRUCTURAL ENGINEER DELEGATED RESPONSIBILITY AND ACCEPTANCE BY DSA. THE PROJECT INSPECTOR WILL VERIFY THAT ALL COMPONENTS AND EQUIPMENT HAVE BEEN ANCHORED IN ACCORDANCE WITH THE ABOVE REQUIREMENTS.

PIPING, DUCTWORK, AND ELECTRICAL DISTRIBUTION SYSTEM BRACING NOTE

PIPING, DUCTWORK, AND ELECTRICAL DISTRIBUTION SYSTEMS SHALL BE BRACED TO COMPLY WITH THE FORCES AND DISPLACEMENTS PRESCRIBED IN ASCE 7-16 SECTION 13.3 AS DEFINED IN ASCE 7-16 SECTIONS 13.6.5, 13.6.6, 13.6.7, 13.6.8; AND 2022 CBC, SECTIONS 1617A.1.24, 1617A.1.25 AND 1617A.1.26.

THE METHOD OF SHOWING BRACING AND ATTACHMENTS TO THE STRUCTURE FOR THE IDENTIFIED DISTRIBUTION SYSTEM ARE AS NOTED BELOW. WHEN BRACING AND ATTACHMENTS ARE BASED ON A PRE-APPROVED INSTALLATION GUIDE (E.G. HCAi OPM FOR 2013 CBC OR LATER), COPIES OF THE BRACING SYSTEM INSTALLATION GUIDE OR MANUAL SHALL BE AVAILABLE ON THE JOBSITE PRIOR TO THE START OF AND DURING THE HANGING AND BRACING OF THE DISTRIBUTION SYSTEMS. THE STRUCTURAL ENGINEER OF RECORD SHALL VERIFY THE ADEQUACY OF THE STRUCTURE TO SUPPORT THE HANGER AND BRACE LOADS.

ELECTRICAL DISTRIBUTION SYSTEMS (E)

MP□ MD□ PP□ E☒ OPTION 1 DETAILED ON APPROVED DRAWINGS WITH PROJECT SPECIFIC NOTES AND DETAILS

MP□ MD□ PP□ E□ OPTION 2: SHALL COMPLY WITH HCAi (OSHPD) PREAPPROVAL (OPM#) #__________________.

LIST OF DRAWINGS

SHEET	DESCRIPTION	SHEET	DESCRIPTION
E100	GENERAL NOTES, ABBREVIATIONS, SYMBOLS & DRAWING LIST	E302	ADMINISTRATION BUILDING LIGHTING PLAN -EAST
E101	TITLE 24 PAGE 1 INDOOR	E303	ADMINISTRATION BUILDING EM AND NORMAL PHOTOMETRIC PLAN - WEST
E102	TITLE 24 PAGE 2 OUTDOOR	E304	ADMINISTRATION BUILDING EM AND NORMAL PHOTOMETRIC PLAN - EAST
E130	ADMIN BUILDING SITE LIGHTING PLAN - EGRESS	E401	ADMINISTRATION BUILDING POWER PLAN - WEST
E131	ADMIN BUILDING LIGHTING -EMERGENCY PHOTOMETRIC	E402	ADMINISTRATION BUILDING POWER PLAN - EAST
E140	EXISTING ELECTRICAL SITE PLAN	E410	ENLARGED TEL./I.T. AND ELECTRICAL ROOMS (154, 162, & 163)
E141	ELECTRICAL SITE PLAN - NEW WORK	E420	MECHANICAL EQUIPMENT ELECTRICAL SCHEDULE
E145	DEMO ROOF PLAN	E421	ADMINISTRATION BUILDING MECHANICAL AND PLUMBING ELECTRICAL PLAN - WEST
E200	EXISTING ELEC. SINGLE LINE DIAGRAM & EXISTING ADMIN. BLDG. ELEC. RM.	E422	ADMINISTRATION BUILDING MECHANICAL AND PLUMBING ELECTRICAL PLAN -EAST
E201	ADMIN BLDG. ELEC. RM. & PARTIAL ELEC. SINGLE LINE DIAGRAM - NEW WORK	E423	ADMINISTRATION BUILDING MECHANICAL ELECTRICAL PLAN FOR MECHANICAL SYSTEMS ON ROOF
E202	ELECTRICAL PANEL SCHEDULES (NEW)	E500	FIRE ALARM GENERAL NOTES AND DEVICES LEGEND
E300A	LIGHTING FIXTURE SCHEDULE	E501	FIRE ALARM GENERAL NOTES AND DEVICES LEGEND
E300B	LIGHTING FIXTURE TYPE 'F1' CUT SHEETS	E502	EST4 EMERGENCY COMMUNICATIONS PLATFORM CUT SHEETS
E300C	LIGHTING FIXTURE TYPE 'F4' CUT SHEETS	E503	EST4 REMOTE ENUNCIATOR CUT SHEETS
E300D	LIGHTING FIXTURE TYPE 'F8' CUT SHEETS	E504	ADMINISTRATION BUILDING FIRE ALARM PLAN - WEST
E300E	LIGHTING FIXTURE TYPE 'F9' CUT SHEETS	E505	ADMINISTRATION BUILDING FIRE ALARM PLAN - EAST
E300F	LIGHTING FIXTURE TYPE 'F11' & 'F17' CUT SHEETS	E506	FIRE ALARM PLAN ON ROOF
E300G	LIGHTING FIXTURE TYPE 'F20', 'OD' & 'OT' CUT SHEETS	E507	NEW FIRE ALARM RISER DIAGRAM
E301	ADMINISTRATION BUILDING LIGHTING PLAN - WEST	E600	ELECTRICAL DETAILS

SCOPE OF WORK

PROVIDE POWER, LIGHTING, AND COMMUNICATIONS UPGRADE OF EXISTING ADMIN BUILDING. EXISTING POWER SERVICE AT BUILDING TO REMAIN. ENTIRE BUILDING POWER CONNECTED TO EXISTING EMERGENCY GENSET.

LIST OF APPLICABLE CODES

LIST OF APPLICABLE CODES

2022 CALIFORNIA ADMINISTRATIVE CODE (CAC), PART 1, TITLE 24 CCR
2022 CALIFORNIA BUILDING CODE (CBC), PART 2, TITLE 24 CCR
2022 CALIFORNIA ELECTRICAL CODE (CEC), PART 3, TITLE 24 CCR
2022 CALIFORNIA MECHANICAL CODE (CMC), PART 4, TITLE 24 CCR
2022 CALIFORNIA PLUMBING CODE (CPC), PART 5, TITLE 24 CCR
2022 CALIFORNIA ENERGY CODE, PART 6, TITLE 24 CCR
2022 CALIFORNIA FIRE CODE (CFC), PART 9, TITLE 24 CCR
2022 CALIFORNIA EXISTING BUILDING CODE (CEBC), PART 10, TITLE 24 CCR
2022 CALIFORNIA GREEN BUILDING STANDARDS CODE (CALGREEN), PART 11, TITLE 24 CCR
2022 CALIFORNIA REFERENCED STANDARDS CODE, PART 12, TITLE 24 CCR
TITLE 19 CCR, PUBLIC SAFETY, STATE FIRE MARSHAL REGULATIONS

APPLICABLE STANDARDS

FOR A LIST OF APPLICABLE STANDARDS, INCLUDING CALIFORNIA AMENDMENTS TO THE NFPA STANDARDS, REFER TO CBC CHAPTER 35 AND CFC CHAPTER 80.

ABBREVIATIONS

A	AMPERES	DWG	DRAWING	LV	LOW VOLTAGE		CONDUIT
AF	AMP FRAME/AMP FUSE	ECD	ELECTRICAL CONTRACTOR	M	METER	RM	ROOM
AFC	AVAILABLE FAULT CURRENT	EM	EMERGENCY LIGHT/FEEDER	MC	METAL CLAD	SN	SYSTEM NEUTRAL
AFF	ABOVE FINISHED FLOOR	EMT	ELECTRICAL METAL TUBING	MDF	MAIN DISTRIBUTION FRAME	SPD	SURGE PROTECTION DEVICE
AIC	AMP INTERRUPTING CURRENT	EOR	ENGINEER OF RECORD	MIN.	MINIMUM	TC	TIME CLOCKS
ARCH	ARCHITECT	EPR	ETHYLENE PROPYLENE RUBBER	MTD	MOUNTED	TTB	TELEPHONE TERMINAL BOARD
AS	AMP SWITCH	EVCS	ELECTRIC VEHICLE CHARGING STATION	MTB	MAIN TELEPHONE BACKBOARD	TTC	TELEPHONE TERMINAL CABINET
ASTM	AMERICAN SOCIETY OF TESTING MATERIAL(S)	(F)	FRONT	MTG	MOUNTING	TR	TRANSFORMER
AT	AMP TRIP	FS	SHALLOW FLOOR BOX	MV	MEDIUM VOLTAGE	TVSS	TRANSIENT VOLTAGE SURGE SUPPRESSOR
ATS	AUTOMATIC TRANSFER SWITCH	FT	FEET	MH	MAN HOLE	TYP	TYPICAL
AWG	AMERICAN WIRE GAGE	GC	GENERAL CONTRACTOR	MFG	MANUFACTURER	UG	UNDERGROUND
BKBD	BACKBOARD	GFI	GROUND FAULT INTERRUPTER	NEC	NATIONAL ELECTRICAL CODE	UL	UNDERWRITERS LABORATORY
C	CONDUIT OR CEILING	GND	GROUND	(N)	NEW	UON	UNLESS OTHERWISE NOTED
CB	CIRCUIT BREAKER	HP	HORSEPOWER	NIC	NOT IN CONTRACT	UNSW	UNSWITCHED
CONT	CONTINUATION	ID	IDENTIFICATION	NL	NIGHT LIGHT	V	VOLTS/VOLTAGE
CKT	CIRCUIT	IDF	INTERMEDIATE DISTRIBUTION FRAME	NO	NORMALLY OPEN	VA	VOLT AMPS
CLG	CEILING			NC	NORMALLY CLOSED	VD	VOLTAGE DROP
CO	CONDUIT ONLY	IG	ISOLATED GROUND	OH	OVERHEAD	W	WATTS/WATTAGE OR WIRE
CTV	CABLE TELEVISION	JB	JUNCTION BOX	P	POWER OR POLE	WP	WEATHERPROOF
(CU)	COPPER	K	KILO	PBO	PROVIDED BY OTHERS	W/	WITH
CW	COLD WATER PIPE	KVA	KILO VOLT AMPS=1000VA	PNL	PANEL	(X)	EXISTING
DIS	DISCONNECT	LC	LIGHTING CONTACTOR	PV	PHOTO VOLTAIC	ϕ	PHASE
DS	DISCONNECT SWITCH	LCL	LONG CONTINUOUS LOAD	(R)	REMOVED		
				RGS	RIGID GALVANIZED STEEL		

MOUNTING HEIGHT OVER OBSTRUCTION

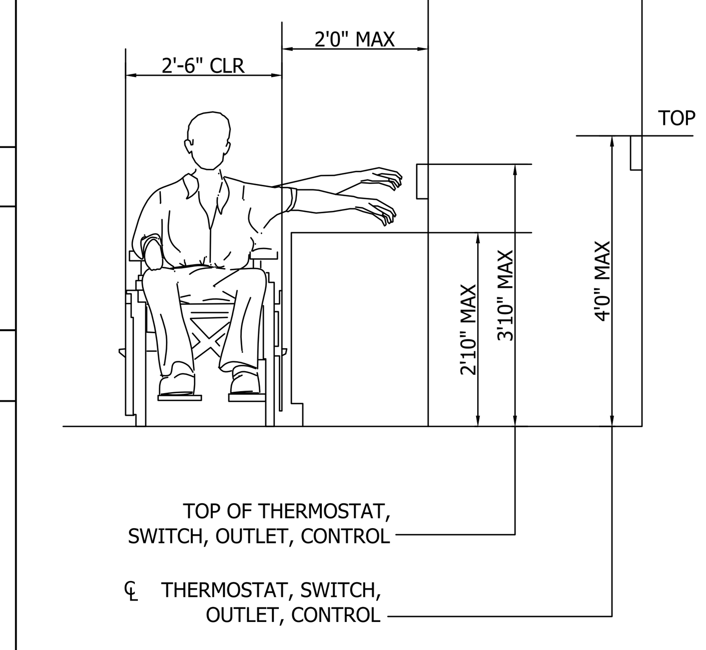

PER ADA STANDARD

MOUNTING HEIGHT UNOBSTRUCTED

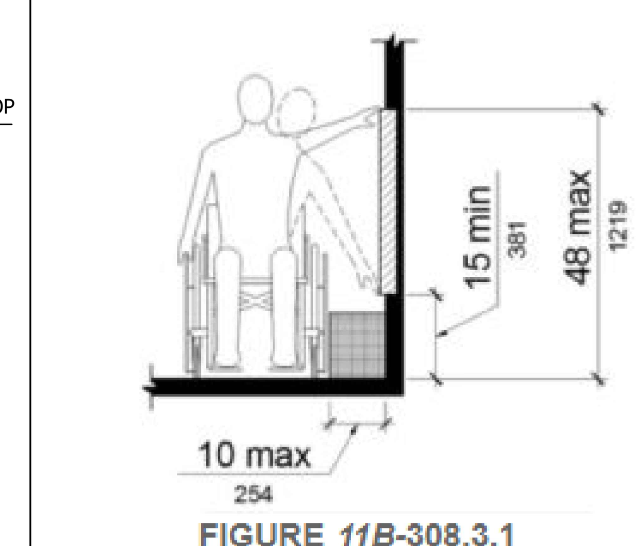

FIGURE 11B-308.3.1
UNOBSTRUCTED SIDE REACH

SITE/AREA MAP

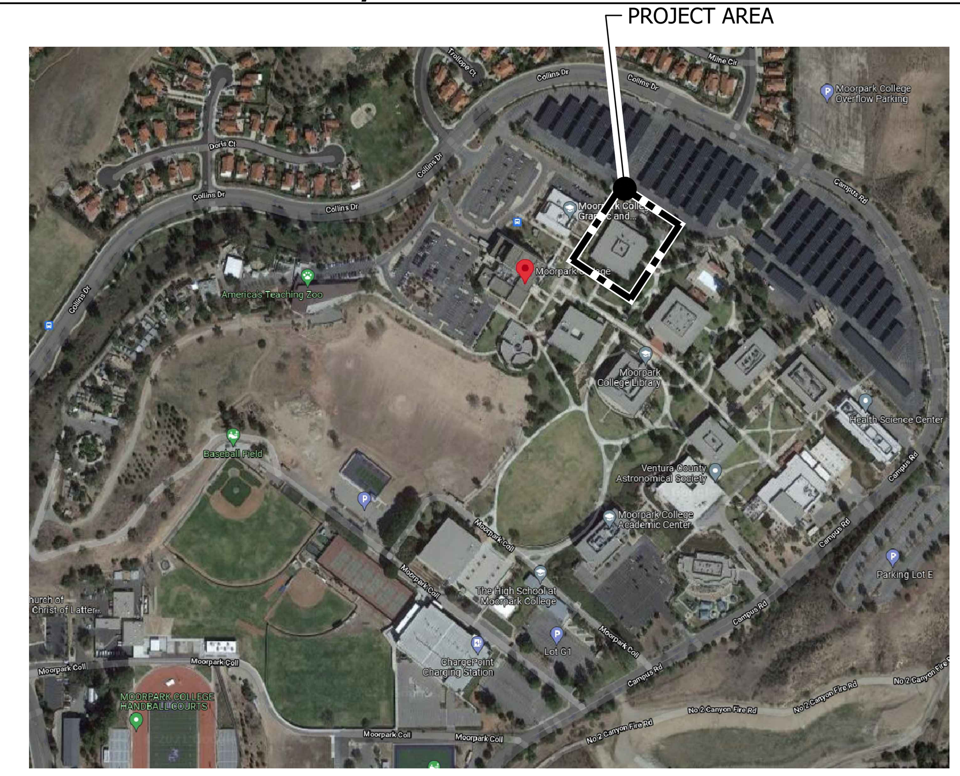

DIVISION OF THE STATE ARCHITECT
IDENTIFICATION STAMP
DIV. OF THE STATE ARCHITECT
APP: 03-123218 INC:
REVIEWED FOR
SS ☑ FLS ☑ ACS ☑
DATE: 07/11/2024

AMADOR WHITTLE ARCHITECTS, INC.
28328 AGOURA ROAD, SUITE 203
AGOURA HILLS, CA 91301
(805) 530-3938 , (818) 874-0071

Ventura County Community College

PROJECT TITLE
MOORPARK COLLEGE ADMINISTRATION BUILDING RENOVATION

7075 CAMPUS ROAD
MOORPARK, CA 91320

CONSULTANT
LUCCI & ASSOCIATES INC.
CONSULTING ELECTRICAL ENGINEERS
3251 CORTE MALPASO, #511
CAMARILLO, CA 93012-8094
(805) 389-6520 FAX (805) 389-6519

LUCCI & ASSOCIATES, INC. reserve their commonlaw copyright and other property rights in these plans. These plans and drawings are not to be reproduced, changed, or copied in any form or manner whatsoever without first obtaining the expressed written permission and consent of LUCCI & ASSOC. INC nor are they to be assigned to any third party without obtaining said written permission and consent.

STAMPS/SEALS
REGISTERED PROFESSIONAL ENGINEER KENNETH W. LUCCI No. E-8340 Exp. 09/30/2024 ELECTRICAL STATE OF CALIFORNIA
LICENSED ARCHITECT JEAN ANN AMADOR C-22205 APRIL 30, 2025 DATE STATE OF CALIFORNIA

12/08/2023 - DSA RESUBMITTAL

SHEET TITLE:
GENERAL NOTES, ABBREVIATIONS, SYMBOLS & DRAWING LIST

PROJECT NO.: 21-MPC-040 PROJECT ARCH:
DRAWN: LK/DS CHECKED:
SHEET NUMBER:
E100
DATE: 12/08/23 SHEET: ____ OF ____

IF THIS SHEET IS NOT 30" X 42", IT IS NOT FULL SIZE, SCALE ACCORDINGLY
L.A.I.# 21-375

Copyright Lucci and Associates Consulting Electrical Engineers. Deviations from this drawing will not be made without their expressed written permission.

Drafter:CM02 Paper Size: 12,9 Drawing:G:\21\375\EL\Sheets\21-375E100.dwg Jan 03, 2024, 11:50am Attached XREFS: XREF:G:\21\375\EL\Xrefs\21-375TB.dwg
Drafter: CM01; G:\21\375\EL\Sheets\21-375E100.dwg; DATE: DEC 04, 2023 TIME: 12:11 PM

V. DECLARATION OF REQUIRED CERTIFICATES OF ACCEPTANCE

Selections have been made based on information provided in this document. If any selections have been changed by the permit applicant, an explanation should be included in Table E. Additional Remarks. These documents must be provided to the building inspector during construction and any with "-A" in the form name must be completed through an Acceptance Test Technician Certification Provider (ATTCP). For more information visit: http://www.energy.ca.gov/title24/attcp/providers.html

Form/Title	Systems/Spaces To Be Field Verified
NRCA-LTI-04-A - Must be submitted for demand responsive lighting controls.	SMALL OFFICES; OPEN OFFICES

G. MODULAR LIGHTING SYSTEMS

This section does not apply to this project.

H. INDOOR LIGHTING CONTROLS (Not including PAFs)

This table includes lighting controls for conditioned and unconditioned spaces.

Building Level Controls

01	02	03	
		Field Inspector	
Mandatory Demand Response 110.12(c)	Shut-off controls 130.1(c) / 160.5(b)4C	Pass	Fail
Required >= 4,000W subject to multilevel	Whole Building EMCS	☐	☐

Area Level Controls

04	05	06	07	08	09	10	11	12	
Area Description	Complete Building or Area Category Primary Function Area	Manual Area Controls 130.1(a) / 160.5(b)4A	Multi-Level Controls 130.1(b) / 160.5(b)4B	Shut-Off Controls 130.1(c) // 160.5(b)4C	Primary/Skylit Daylighting 130.1(d) / 160.5(b)4D	Secondary Daylighting 130.1(d) / 160.5(b)4D	Interlocked Systems 140.6(a)1/ 170.2(e)2A	Field Inspector	
								Pass	Fail
SMALL OFFICES	Office	Readily Accessible	Multilevel Switch	EMCS	NA: General Ltg < 120W	NA: Overhang	No	☐	☐
OPEN OFFICES	Office	Readily Accessible	Multilevel Switch	EMCS	NA: Not daylit zone	NA: Not daylit zone	No	☐	☐
					13				
					Plan Sheet Showing Daylit Zones:				

This document is used to demonstrate compliance with requirements in 110.9, 110.12(c), 130.0, 130.1, 140.6 and 141.0(b)2 for indoor lighting scopes using the prescriptive path for nonresidential and hotel/motel occupancies. It is also used to document compliance with requirements in 160.5, 170.2(e) and 180.2(b)4 for indoor lighting scopes using the prescriptive path for multifamily occupancies. Multifamily includes dormitory and senior living facilities.

A. GENERAL INFORMATION

01	Project Location (city)	Moorpark	04	Total Conditioned Floor Area (ft^2)	18,250
02	Climate Zone	6	05	Total Unconditioned Floor Area (ft^2)	0
03	Occupancy Types Within Project (select all that apply):		06	# of Stories (Habitable Above Grade)	0

● Office

B. PROJECT SCOPE

This table includes any lighting systems that are within the scope of the permit application and are demonstrating compliance using the prescriptive path outlined in 140.6 / 170.2(e) or 141.0(b)2 / 180.2(b)4 for alterations.

Scope of Work	Conditioned Spaces		Unconditioned Spaces	
01	02	03	04	05
My Project Consists of (check all that apply):	Calculation Method	Area (ft^2)	Calculation Method	Area (ft^2)
☒ New Lighting System	Complete Building Method	18250	N/A	0
☐ New Lighting System - Parking Garage	N/A	0	N/A	0
Total Area of Work (ft^2)	18250			

DOCUMENTATION AUTHOR'S DECLARATION STATEMENT

I certify that this Certificate of Compliance documentation is accurate and complete.

Documentation Author Name: Kenneth Lucci	Documentation Author Signature:
Company: Lucci & Associates	Signature Date: 06-26-2023
Address:	CEA/ HERS Certification Identification (if applicable):
City/State/Zip:	Phone:

RESPONSIBLE PERSON'S DECLARATION STATEMENT

I certify the following under penalty of perjury, under the laws of the State of California:

1. The information provided on this Certificate of Compliance is true and correct.
2. I am eligible under Division 3 of the Business and Professions Code to accept responsibility for the building design or system design identified on this Certificate of Compliance (responsible designer)
3. The energy features and performance specifications, materials, components, and manufactured devices for the building design or system design identified on this Certificate of Compliance conform to the requirements of Title 24, Part 1 and Part 6 of the California Code of Regulations.
4. The building design features or system design features identified on this Certificate of Compliance are consistent with the information provided on other applicable compliance documents, worksheets, calculations, plans and specifications submitted to the enforcement agency for approval with this building permit application.
5. I will ensure that a completed signed copy of this Certificate of Compliance shall be made available with the building permit(s) issued for the building, and made available to the enforcement agency for all applicable inspections. I understand that a completed signed copy of this Certificate of Compliance is required to be included with the documentation the builder provides to the building owner at occupancy.

Responsible Designer Name: Kenneth Lucci	Responsible Designer Signature:
Company: Lucci & Associates	Date Signed: 06-26-2023
Address:	License:
City/State/Zip:	Phone:

I. LIGHTING POWER ALLOWANCE: COMPLETE BUILDING OR AREA CATEGORY METHODS

Each area complying using the Complete Building or Area Category Methods per 140.6(b) are included in this table. Column 06 indicates if additional lighting power allowances per 140.6(c) or adjustments per 140.6(a) are being used .

Conditioned Spaces

01	02	03	04	05	06	
Area Description	Complete Building or Area Category Primary Function Area	Allowed Density (W/ft^2)	Area (ft^2)	Allowed Wattage (Watts)	Additional Allowance / Adjustment	
					Area Category	PAF
OPEN OFFICES	Office	0.6	3,885	2,331	No	No
SMALL OFFICES	Office	0.6	14,340	8,604	No	No
			TOTALS:	18,225	10,935	See Tables J, or P for detail

J. ADDITIONAL ALLOWANCE: AREA CATEGORY METHOD QUALIFYING LIGHTING SYSTEM

This section does not apply to this project.

K. TAILORED METHOD GENERAL LIGHTING POWER ALLOWANCE

This section does not apply to this project.

L. ADDITIONAL LIGHTING ALLOWANCE: TAILORED WALL DISPLAY

This section does not apply to this project.

M. ADDITIONAL LIGHTING ALLOWANCE: TAILORED FLOOR AND TASK LIGHTING

This section does not apply to this project.

N. ADDITIONAL LIGHTING ALLOWANCE: TAILORED DECORATIVE /SPECIAL EFFECTS

This section does not apply to this project.

C. COMPLIANCE RESULTS

If any cell on this table says "DOES NOT COMPLY" or "COMPLIES with Exceptional Conditions" refer to Table D. for guidance.

Lighting in conditioned and unconditioned spaces must not be combined for compliance per 140.6(b)1 / 170.2(e)	Allowed Lighting Power per 140.6(b) / 170.2(e) (Watts)						Adjusted Lighting Power per 140.6(a) / 170.2(e) (Watts)				Compliance Results
	01	02	03	04		05		06	07		08	09
									Adjustments			
	Complete Building 140.6(c)1	Area Category 140.6(c)2 / 170.2(e)4	Area Category Additional 140.6(c)2G / 170.2(e)4Av (+)	Tailored 140.6(c)3 / 170.2(e)4B (+)	=	**Total Allowed** (Watts)	≥	Total Designed (Watts)	PAF Lighting Control Credits 140.6(a)2 / 170.2(e)1B (-)	=	**Total Adjusted** (Watts) *Includes Adjustments	**05 must be >= 08 140.6 / 170.2(e)**
	(See Table I)	(See Table I)	(See Table J)	(See Table K)				(See Table F)	(See Table P)			
Conditioned	10,935				=	10,935	≥	10,018		=	10018	COMPLIES
Unconditioned					=		≥			=		
Controls Compliance (See Table H for Details)												COMPLIES
Rated Power Reduction Compliance (See Table Q for Details)												

D. EXCEPTIONAL CONDITIONS

This table is auto-filled with uneditable comments because of selections made or data entered in tables throughout the form.

E. ADDITIONAL REMARKS

This table includes remarks made by the permit applicant to the Authority Having Jurisdiction.

O. ADDITIONAL LIGHTING ALLOWANCE: TAILORED VERY VALUABLE MERCHANDISE

This section does not apply to this project.

P. POWER ADJUSTMENT: LIGHTING CONTROL CREDIT (POWER ADJUSTMENT FACTOR (PAF))

This section does not apply to this project.

Q. RATED POWER REDUCTION COMPLIANCE FOR ONE-FOR-ONE ALTERATIONS

This section does not apply to this project.

R. 80% LIGHTING POWER FOR ALL ALTERATIONS - CONTROLS EXCEPTIONS

This section does not apply to this project.

S. DAYLIGHT DESIGN POWER ADJUSTMENT FACTOR (PAF)

This section does not apply to this project.

T. DWELLING UNIT LIGHTING

This section does not apply to this project.

U. DECLARATION OF REQUIRED CERTIFICATES OF INSTALLATION

Selections have been made based on information provided in this document. If any selections have been changed by permit applicant, an explanation should be included in Table E. Additional Remarks. These documents must be provided to the building inspector during construction and can be found online

Form/Title
NRCI-LTI-E - Must be submitted for all buildings

F. INDOOR LIGHTING FIXTURE SCHEDULE

This table includes all planned permanent and portable lighting other than dwelling unit/ hotel/ motel room lighting. Multifamily dwelling unit and hotel/motel room lighting is documented in Table T. If using Table T to document lighting in multifamily common use areas providing shared provisions for living, eating, cooking or sanitation, those luminaires are not included here.

Designed Wattage: Conditioned Spaces

01	02	03	04	05	06	07	08	09	10	
Name or Item Tag	Complete Luminaire Description	Modular (Track) Fixture	Small Aperture & Color Change[1]	Watts per luminaire[2]	How is Wattage determined	Total Number of Luminaires	Excluded per 140.6(a)3 / 170.2(e)2C	Design Watts	Field Inspector	
									Pass	Fail
F1	2 X 4 LAYIN TROFFER LED	No	NA	41	Mfr. Spec	2	No	82	☐	☐
F2	2 X 2 LAY IN TROFFER LED	No	NA	36	Mfr. Spec	215	No	7,740	☐	☐
F3	6" DOWNLIGHT	No	NA	20	Mfr. Spec	20	No	400	☐	☐
F4	6" WALL WASH DOWNLIGHT	No	NA	20	Mfr. Spec	3	No	60	☐	☐
F6	1' X 4' SURFACE MOUNTED LED	No	NA	34	Mfr. Spec	3	No	102	☐	☐
F7	UNDERCOUNTER SURFACE MOUNTED LED	No	NA	10	Mfr. Spec	9	No	90	☐	☐
F9	4 FOOT LED WORK LIGHT	No	NA	39	Mfr. Spec	10	No	390	☐	☐
F17	PENDANT LIGHT LED 12 FOOT	No	NA	84	Mfr. Spec	2	No	168	☐	☐
F21	1' X 4' SURFACE MOUNTED LED	No	NA	39	Mfr. Spec	24	No	936	☐	☐
OD	SURFACE MOUNTED SQUARE LED 15"	No	NA	25	Mfr. Spec	2	No	50	☐	☐
							Total Designed Watts: CONDITIONED SPACES	10,018		

[1]*FOOTNOTE: Design Watts for small aperture and color changing luminaires which qualify per 140.6(a)4B / 170.2(e)2D is adjusted to be 75% /80% of their rated wattage. Table F automatically makes this adjustment, the permit applicant should enter full rated wattage in column 05.*

[2]*Authority Having Jurisdiction may ask for Luminaire cut sheets to confirm wattage used for compliance per 130.0(c) / 160.5(b). Wattage used must be the maximum rated for the luminaire, not the lamp.*

DIVISION OF THE STATE ARCHITECT
IDENTIFICATION STAMP
DIV. OF THE STATE ARCHITECT
APP: 03-123218 INC:
REVIEWED FOR
SS ☑ FLS ☑ ACS ☑
DATE: 07/11/2024

AMADOR WHITTLE
ARCHITECTS, INC.
28328 AGOURA ROAD, SUITE 203
AGOURA HILLS, CA 91301
(805) 530-3938 , (818) 874-0071

Ventura County Community College

PROJECT TITLE
MOORPARK COLLEGE ADMINISTRATION BUILDING RENOVATION

7075 CAMPUS ROAD
MOORPARK, CA 91320

CONSULTANT
LUCCI & ASSOCIATES INC.
CONSULTING ELECTRICAL ENGINEERS
3261 CORTE MALPASO, #511
CAMARILLO, CA 93012-8094
(805) 389-6520 FAX (805) 389-6519

LUCCI & ASSOCIATES, INC. reserve their commonlaw copyright and other property rights in these plans. These plans and drawings are not to be reproduced, changed, or copied in any form or manner whatsoever without first obtaining the expressed written permission and consent of LUCCI & ASSOC. INC nor are they to be assigned to any third party without obtaining said written permission and consent.

STAMPS/SEALS

REGISTERED PROFESSIONAL ENGINEER KENNETH W. LUCCI ELECTRICAL STATE OF CALIFORNIA Exp. 09/30/2024

LICENSED ARCHITECT JAN ANN AMADOR C-22205 APRIL 30, 2025 DATE STATE OF CALIFORNIA

12/08/2023 - DSA RESUBMITTAL

SHEET TITLE:
TITLE 24 PAGE 1 INDOOR

PROJECT NO.: 21-MPC-040	PROJECT ARCH:
DRAWN: LK/DS	CHECKED:

SHEET NUMBER:
E101

DATE: 12/08/23 SHEET: ___ OF ___

IF THIS SHEET IS NOT 30"X 42", IT IS NOT FULL SIZE, SCALE ACCORDINGLY
L.A.I.# 21-375

DATE: 18 December 2023 TIME: 8:29 am
PATHNAME: G:\21\375\EL\Sheets
DRAWING FILENAME: 21-375E101
DRAFTER: CM01

Autodesk Docs: Revit 2021 (Build: 20190531_1515(x64))
Date: 6/26/2023 5:29:51 PM
Model: 21-375_Moorpark College Admin Bldg_Central 3.rvt
WBS-0-1/1/1/

STATE OF CALIFORNIA
Outdoor Lighting
CALIFORNIA ENERGY COMMISSION

CERTIFICATE OF COMPLIANCE			**NRCC-LTO-E**
Project Name:	Moorpark College Administration building remodel	**Report Page:**	**(Page 7 of 8)**
		Date Prepared:	2023-07-17T17:47:19-04:00

M. LIGHTING ALLOWANCE: PER SPECIFIC AREA

This table includes areas using the wattage allowance per specific area from Table 140.7-B /Table 170.2-S. More than one specific area allowance may be taken in a single project, if applicable. However, multiple specific area allowances may not be taken for the exact same area on the site.

01	02	03	04	05	06	07	08	09	10
		CALCULATED ALLOWANCE (Watts)			**DESIGN WATTS**				
Area Description	Specific Area Type per Table 140.7-B	Specific Area (ft^2)[1]	Allowed Density (W/ft^2)	Extra Allowance (Watts)	Luminaire Name or Item Tag	Watts per Luminaire	# of Luminaires	Design Watts	Additional Allowance (Watts)
								Total Allowance (Watts) All Areas:	

[1] *FOOTNOTES: See Table 140.7-B /Table 170.2-S for rules for calculating the specific areas (ft^2 for these additional lighting allowances.*
[2] *For luminaires indicated in Table F as linear, wattage in column 07 is W/lf instead of Watts/luminaire. Total linear feet should be indicated in column 08 instead of number of luminaires.*

N. EXISTING CONDITIONS POWER ALLOWANCE (alterations only)

This section does not apply to this project.

O. DECLARATION OF REQUIRED CERTIFICATES OF INSTALLATION

Selections have been made based on information provided in this document. If any selection has been changed by permit applicant, an explanation should be included in Table E. Additional Remarks. These documents must be provided to the building inspector during construction and can be found online

Form/Title
NRCI-LTO-E - Must be submitted for all buildings

P. DECLARATION OF REQUIRED CERTIFICATES OF ACCEPTANCE

There are no NRCA forms required for this project.

STATE OF CALIFORNIA
Outdoor Lighting
CALIFORNIA ENERGY COMMISSION

CERTIFICATE OF COMPLIANCE			**NRCC-LTO-E**
Project Name:	Moorpark College Administration building remodel	**Report Page:**	**(Page 4 of 8)**
		Date Prepared:	2023-07-17T17:47:19-04:00

H. OUTDOOR LIGHTING CONTROLS

This table demonstrates compliance with controls requirements for all new or altered luminaires installed as part of the permit application. For alteration projects, luminaires which are existing to remain (ie untouched) and luminaires which are removed and reinstalled (wiring only) do not need to be included in this table even if they are within the spaces covered by the permit application.
Outdoor lighting for nonresidential buildings, parking garages and common service areas in multifamily buildings must be documented separately from outdoor lighting attached to multifamily buildings and controlled from the inside of a dwelling unit

Mandatory Controls for Nonresidential Occupancies, Parking Garages & Common Areas in Multifamily Buildings

01	02	03	04	05	
Area Description	Shut-Off 130.2(c)1 / 160.5(c)	Auto-Schedule 130.2(c)2 / 160.5(c)	Motion Sensor 130.2(c)3 / 160.5(c)	Field Inspector	
				Pass	Fail
egress pathway: "P1"	Astronomical Timer	Provided - EMCS	Provided	☐	☐

[1] *FOOTNOTE: Text has been abbreviated, please refer to Table 160.5-A to confirm compliance with the specific light source technologies listed.*
[2] *Authority having jurisdiction may ask for cutsheets or other documentation to confirm compliance of light source.*
[3] *Recessed luminaires marked for use in fire-rated installations, and recessed luminaires installed in non-insulated ceilings are excepted from ii and iii.*

STATE OF CALIFORNIA
Outdoor Lighting
CALIFORNIA ENERGY COMMISSION

CERTIFICATE OF COMPLIANCE			**NRCC-LTO-E**
Project Name:	Moorpark College Administration building remodel	**Report Page:**	**(Page 1 of 8)**
Project Address:		**Date Prepared:**	2023-07-17T17:47:19-04:00

This document is used to demonstrate compliance with requirements in 110.9, 130.0, 130.2, 140.7, and 141.0(b)2L for outdoor lighting scopes using the prescriptive path for nonresidential and hotel/motel occupancies. It is also used to document compliance with requirements in 160.5, 170.2(e)6, 180.1(o) and 180.2(b)4Bv for outdoor lighting scopes using the prescriptive path for multifamily and mixed-use occupancies. Multifamily includes dormitory and senior living facilities.

A. GENERAL INFORMATION

01	Project Location (city)	Moorpark	04	Total Illuminated Hardscape Area (ft^2)	15000
02	Climate Zone	6			
03	Outdoor Lighting Zone per Title 24 Part 1 10.114 or as designated by Authority Having Jurisdiction (AHJ):				
☐	LZ-0: Very Low - Undeveloped Parkland	☐ LZ-2: Moderate - Urban Clusters	☐ LZ-4: High - Must be reviewed by CA Energy Commission for Approval		
☐	LZ-1: Low - Rural Areas	☒ LZ-3: Moderately High - Urban Areas			
05	Occupancy Types within Project				
● Office					

B. PROJECT SCOPE

This table includes outdoor lighting systems that are within the scope of the permit application and are demonstrating compliance using the prescriptive path outlined in 140.7 / 170.2(e)6 or 141.0(b)2L / 180.2(b)4Bv for alterations.

My Project Consists of:

01	02	
☐ New Lighting System	Must Comply with Allowances from 140.7 / 170.2(e)6	
☒ Altered Lighting System	Is your alteration increasing the connected lighting load (Watts)?	● Yes ○ No

03	04	05
% of Existing Luminaires Being Altered[1]	Sum Total of Luminaires Being Added or Altered	Calculation Method
☐ < 10% ☐ >= 10% and < 50% ☐ >= 50%		

Please proceed to Table F. Outdoor Lighting Fixture Schedule to define the project's luminaires.

[1] *FOOTNOTES: % of Existing Luminaires Being Altered = (Sum Total of Luminaires Being Added or Altered / Existing Luminaires within the Scope of the Permit Application) x 100.*

STATE OF CALIFORNIA
Outdoor Lighting
CALIFORNIA ENERGY COMMISSION

CERTIFICATE OF COMPLIANCE			**NRCC-LTO-E**
Project Name:	Moorpark College Administration building remodel	**Report Page:**	**(Page 8 of 8)**
Project Address:		**Date Prepared:**	2023-07-17T17:47:19-04:00

DOCUMENTATION AUTHOR'S DECLARATION STATEMENT

I certify that this Certificate of Compliance documentation is accurate and complete.

Documentation Author Name: Kenneth Lucci	Documentation Author Signature:
Company: Lucci & Associates	Signature Date: 07/26/2023
Address:	CEA/ HERS Certification Identification (if applicable):
City/State/Zip:	Phone:

RESPONSIBLE PERSON'S DECLARATION STATEMENT

I certify the following under penalty of perjury, under the laws of the State of California:
1. The information provided on this Certificate of Compliance is true and correct.
2. I am eligible under Division 3 of the Business and Professions Code to accept responsibility for the building design or system design identified on this Certificate of Compliance (responsible designer)
3. The energy features and performance specifications, materials, components, and manufactured devices for the building design or system design identified on this Certificate of Compliance conform to the requirements of Title 24, Part 1 and Part 6 of the California Code of Regulations.
4. The building design features or system design features identified on this Certificate of Compliance are consistent with the information provided on other applicable compliance documents, worksheets, calculations, plans and specifications submitted to the enforcement agency for approval with this building permit application.
5. I will ensure that a completed signed copy of this Certificate of Compliance shall be made available with the building permit(s) issued for the building, and made available to the enforcement agency for all applicable inspections. I understand that a completed signed copy of this Certificate of Compliance is required to be included with the documentation the builder provides to the building owner at occupancy.

Responsible Designer Name: Kenneth Lucci	Responsible Designer Signature:
Company: Lucci & Associates	Date Signed: 07/26/2023
Address:	License:
City/State/Zip:	Phone:

STATE OF CALIFORNIA
Outdoor Lighting
CALIFORNIA ENERGY COMMISSION

CERTIFICATE OF COMPLIANCE			**NRCC-LTO-E**
Project Name:	Moorpark College Administration building remodel	**Report Page:**	**(Page 5 of 8)**
		Date Prepared:	2023-07-17T17:47:19-04:00

I. LIGHTING POWER ALLOWANCE (per 140.7 / 170.2(e))

This table includes areas using allowance calculations per 140.7 / 170.2(e). General Hardscape Allowance is per Table 140.7-A/Table 170.2-R while "Use it or lose it" Allowances are per Table 140.7-B /Table 170.2-S. Indicate which allowances are being used to expand sections for user input. Luminaires that qualify for one of the "Use it or lose it" allowances shall not qualify for another "Use it or lose it" allowance.
Outdoor lighting attached to multifamily buildings and controlled from the inside of a dwelling unit are included in Table H. and are not included here. All other multifamily outdoor lighting is included here.

	01				
	"Use it or lose it" Allowance (select all that apply) (select all that apply)				
☒ General Hardscape Allowance Table I (below)	☒ Per Application Table J	☐ Sales Frontage Table K	☐ Ornamental Table L	☒ Per Specific Area Table M	

Calculated General Hardscape Lighting Power Allowance per Table 140.7-A for Nonresidential & Hotel/Motel

02	03	04	05	06	07	08	09
Area Description	Area Wattage Allowance (AWA)			Linear Wattage Allowance (LWA)			Total General AWA + LWA (Watts)
	Illuminated Area (ft^2)	Allowed Density (W/ft^2)	Area Allowance (Watts)	Perimeter Length (lf)	Allowed Density (W/lf)	Linear Allowance (Watts)	
egress pathway	15000	0.021	315	1800	0.2	360	675
						Initial Wattage Allowance for Entire Site (Watts):	
						Instances of Initial Wattage Allowance (LZ 0 only)[1]	
						Total General Hardscape Allowance (Watts):	675

STATE OF CALIFORNIA
Outdoor Lighting
CALIFORNIA ENERGY COMMISSION

CERTIFICATE OF COMPLIANCE			**NRCC-LTO-E**
Project Name:	Moorpark College Administration building remodel	**Report Page:**	**(Page 2 of 8)**
		Date Prepared:	2023-07-17T17:47:19-04:00

C. COMPLIANCE RESULTS

Results in this table are automatically calculated from data input and calculations in Tables F through N. Note: If any cell on this table says "COMPLIES with Exceptional Conditions" refer to Table D. Exceptional Conditions for guidance or see applicable Table referenced below.

Calculations of Total Allowed Lighting Power (Watts) 140.7 / 170.2(e)6 or 141.0(b)2L / 180.2(b)4Bv														
01		02		03		04		05		06		07		08	09
General Hardscape Allowance 140.7(d)1 / 170.2(e)6 (See Table I)	+	Per Application 140.7(d)2 / 170.2(e)6 (See Table J)	+	Sales Frontage 140.7(d)2 (See Table K)	+	Ornamental 140.7(d)2 / 170.2(e)6 (See Table L)	+	Per Specific Area 140.7(d)2 / 170.2(e)6 (See Table M)	OR	Existing Power Allowance 141.0(b)2L / 180.2(b)4Bv (See Table N)	=	**Total Allowed** (Watts)	≥	**Total Actual** (Watts)	**07 must be >= 08**
675	+	19	+	---	+	---	+	0	OR	---	=	694	≥	616	COMPLIES
										Shielding Compliance (See Table G for Details)					N/A
										Controls Compliance (See Table H for Details)					COMPLIES

D. EXCEPTIONAL CONDITIONS

This table is auto-filled with uneditable comments because of selections made or data entered in tables throughout the form.

E. ADDITIONAL REMARKS

This table includes remarks made by the permit applicant to the Authority Having Jurisdiction.

STATE OF CALIFORNIA
Outdoor Lighting
CALIFORNIA ENERGY COMMISSION

CERTIFICATE OF COMPLIANCE			**NRCC-LTO-E**
Project Name:	Moorpark College Administration building remodel	**Report Page:**	**(Page 6 of 8)**
		Date Prepared:	2023-07-17T17:47:19-04:00

J. LIGHTING ALLOWANCE: PER APPLICATION

This table includes areas using the wattage allowance per application from Table 140.7-B / Table 170.2-S.

01	02	03	04	05	06	07	08	09	10
		CALCULATED ALLOWANCE (Watts)			**DESIGN WATTS**				
Area Description	Application per Table 140.7-B[1]	# of Locations	Allowance per Location[2]	Extra Allowance (Watts)	Luminaire Name or Item Tag	Watts per Luminaire	# of Luminaires	Design Watts	Additional Allowance (Watts)
egress area	Building Entrance/Exit	1	19	19	P1	44	1	44	19
								Total Design Watts for this Area:	44
								Total Allowance (Watts) All Areas:	19

[1] *FOOTNOTES: Primary entrance applications are only available for senior care facilities, healthcare facilities, police stations, hospitals, fire stations, and emergency vehicle facilities.*
[2] *The Allowance per Location for ATMs is 100W for the first ATM and 35W for each additional per Table 140.7-B /Table 170.2-S.*
[3] *For luminaires indicated in Table F as linear, wattage in column 07 is W/lf instead of Watts/luminaire. Total linear feet should be indicated in column 08 instead of number of luminaires.*

K. LIGHTING ALLOWANCE: SALES FRONTAGE

This section does not apply to this project.

L. LIGHTING ALLOWANCE: ORNAMENTAL

This section does not apply to this project.

STATE OF CALIFORNIA
Outdoor Lighting
CALIFORNIA ENERGY COMMISSION

CERTIFICATE OF COMPLIANCE			**NRCC-LTO-E**
Project Name:	Moorpark College Administration building remodel	**Report Page:**	**(Page 3 of 8)**
		Date Prepared:	2023-07-17T17:47:19-04:00

F. OUTDOOR LIGHTING FIXTURE SCHEDULE

For new or altered lighting systems demonstrating compliance with 140.7 / 170.2(e)6 all new luminaires being installed and any existing luminaires remaining or being moved within the spaces covered by the permit application are included in the Table below. For altered lighting systems using the Existing Power method per 141.0(b)2L only new luminaires being installed and replacement luminaires being installed as part of the project scope are included (ie, existing luminaires remaining or existing luminaires being moved are not included). Outdoor lighting attached to multifamily buildings and controlled from the inside of a dwelling unit are included in Table H. and are not included here. All other multifamily outdoor lighting is included here.

Designed Wattage:

01	02		03	04	05	06	07	08	09	10	
Name or Item Tag	Complete Luminaire Description		Watts per luminaire[1, 2]	How is Wattage determined	Total Number Luminaires [2]	Luminaire Status[3]	Excluded per 140.7(a) / 170.2(e)6A	Design Watts	Cutoff Req. > 6,200 initial lumen output 130.2(b) / 160.5(c)[4]	Field Inspector	
										Pass	Fail
P1	pole mounted pedestrian light	☐ Linear	44	Mfr. Spec	14	New	☐	616	NA: < 6200 lumens	☐	☐
								Total Design Watts:	616		

* NOTES: Selections with a * require a note in the space below explaining how compliance is achieved.
EX: Luminaire is lighting a statue; EXCEPTION 2 to 130.2(b)

[1] *FOOTNOTES: Authority Having Jurisdiction may ask for Luminaire cut sheets to confirm wattage used for compliance per 130.0(c) / 160.5(b)*
[2] *For linear luminaires, wattage should be indicated as W/lf instead of Watts/luminaire. Total linear feet should be indicated in column 05 instead of number of luminaires.*
[3] *Select "New" for new luminaires in a new outdoor lighting project, or for added luminaires in an alteration. Select "Altered" for replacement luminaires in an alteration. Select "Existing to Remain" for existing luminaires within the project scope that are not being altered and are remaining. Select "Existing Reinstalled" for existing luminaires which are being removed and reinstalled as part of the project scope.*
[4] *Compliance with mandatory shielding requirements is required for luminaires with initial lumen output >= 6,200 unless exempted by 130.2(b)/ 160.5(c)*

G. SHIELDING REQUIREMENTS (BUG)

This section does not apply to this project.

DIVISION OF THE STATE ARCHITECT
IDENTIFICATION STAMP
DIV. OF THE STATE ARCHITECT
APP: 03-123218 INC:
REVIEWED FOR
SS ☑ FLS ☑ ACS ☑
DATE: 07/11/2024

AMADOR WHITTLE
ARCHITECTS, INC.
28328 AGOURA ROAD, SUITE 203
AGOURA HILLS, CA 91301
(805) 530-3938 , (818) 874-0071

Ventura County Community College

PROJECT TITLE
MOORPARK COLLEGE ADMINISTRATION BUILDING RENOVATION

7075 CAMPUS ROAD
MOORPARK, CA 91320

CONSULTANT
LUCCI & ASSOCIATES INC.
CONSULTING ELECTRICAL ENGINEERS
3261 CORTE MALPASO, #611
CAMARILLO, CA 93012-8094
(805) 389-6520 FAX (805) 389-6519

LUCCI & ASSOCIATES, INC. reserve their commonlaw copyright and other property rights in these plans. These plans and drawings are not to be reproduced, changed, or copied in any form or manner whatsoever without first obtaining the expressed written permission and consent of LUCCI & ASSOC. INC nor are they to be assigned to any third party without obtaining said written permission and consent.

STAMPS/SEALS

REGISTERED PROFESSIONAL ENGINEER KENNETH W. LUCCI Exp. 06/30/24 ELECTRICAL STATE OF CALIFORNIA

LICENSED ARCHITECT JEAN ANN AMADOR C-22205 APRIL 30, 2025 DATE STATE OF CALIFORNIA

12/08/2023 - DSA RESUBMITTAL

SHEET TITLE:
TITLE 24 PAGE 2
OUTDOOR

PROJECT NO.:	21-MPC-040	PROJECT ARCH:	
DRAWN:	LK/DS	CHECKED:	

SHEET NUMBER:
E102

DATE: 12/08/23 SHEET: ____ OF ____

IF THIS SHEET IS NOT 30" X 42", IT IS NOT FULL SIZE, SCALE ACCORDINGLY
L.A.I. # 21-375

Copyright Lucci and Associates Consulting Electrical Engineers. Deviations from this drawing will not be made without their expressed written permission.

TIME: 8:30 am DATE: 18 December 2023 PATHNAME: G:\21\375\ELS\Sheets DRAWING FILENAME: 21-375E102 DRAFTER: CM01

Creator:CM01 Paper Size: 12.5
Date: 12/18/2023 Time: 8:30 AM
Date Plotted: 12/18/2023
Plot By: Lucci & Associates
AMER-G-2017\Revit\Jobs\21-375\Revit

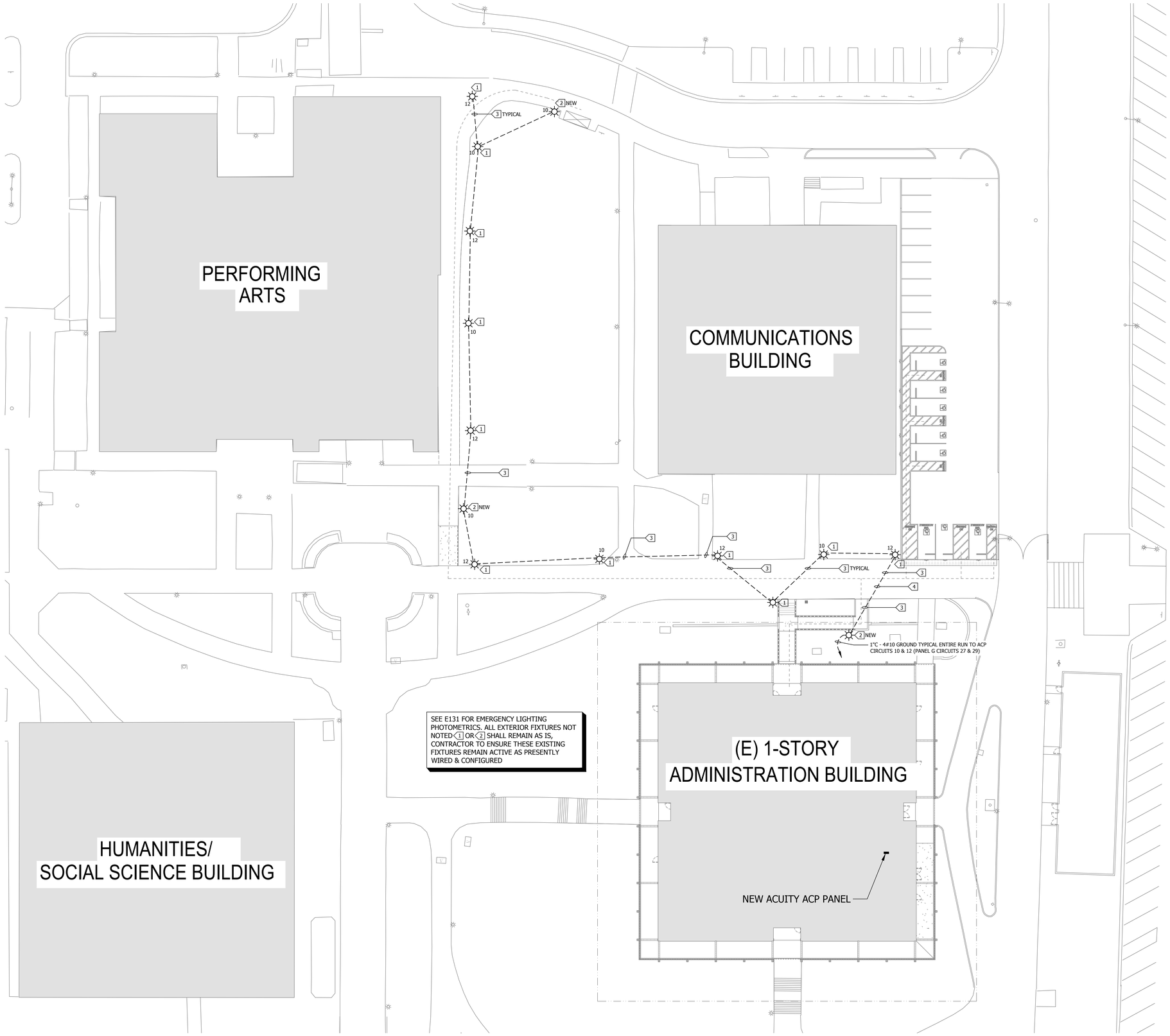

SITE LIGHTING PLAN 1 E130

SCALE: 1"=20'-0"

SHEET NOTES:

1. ALL EXISTING EXTERIOR LIGHTING FIXTURES NOT MODIFIED PER THIS SHEET SHALL REMAIN ACTIVE AS IS. CONTRACTOR TO RECONNECT AS REQUIRED

KEY NOTES:

1. EXISTING PEDESTRIAN POLE LIGHT TO REMAIN ACTIVE BUT CONNECT TO ADMIN BUILDING ACUITY ACP LIGHTING CONTROLLER CIRCUITS AS NOTED. PROVIDE 12" x 18" TRAFFIC RATED CONCRETE PULLBOX (PER E600) IF NEEDED TO INTERCEPT EXISTING FEEDER INTO POLE .
2. NEW PEDESTRIAN POLE LIGHT PER E600, MATCH EXISTING TYPE, CONNECT TO EM CIRCUITS NOTED.
3. SAW CUT ON JOINT & DOWEL IN NEW CONCRETE TYPICAL FOR ALL RUNS THROUGH EXISTING CONCRETE.
4. NEW 1"C-4#10 & 1#10GROUND TYPICAL.

DIVISION OF THE STATE ARCHITECT

IDENTIFICATION STAMP
DIV. OF THE STATE ARCHITECT
APP: 03-123218 INC:
REVIEWED FOR
SS ☑ FLS ☑ ACS ☑
DATE: 07/11/2024

AMADOR WHITTLE
ARCHITECTS, INC.
28328 AGOURA ROAD, SUITE 203
AGOURA HILLS, CA 91301
(805) 530-3938 , (818) 874-0071

Ventura County Community College

PROJECT TITLE

MOORPARK COLLEGE ADMINISTRATION BUILDING RENOVATION

7075 CAMPUS ROAD
MOORPARK, CA 91320

CONSULTANT
LUCCI & ASSOCIATES INC.
CONSULTING ELECTRICAL ENGINEERS
3251 CORTE MALPASO, #511
CAMARILLO, CA 93012-8094
(805) 389-6520 FAX (805) 389-6519

LUCCI & ASSOCIATES, INC. reserve their commonlaw copyright and other property rights in these plans. These plans and drawings are not to be reproduced, changed, or copied in any form or manner whatsoever without first obtaining the expressed written permission and consent of LUCCI & ASSOC. INC nor are they to be assigned to any third party without obtaining said written permission and consent.

STAMPS/SEALS

REGISTERED PROFESSIONAL ENGINEER
KENNETH W. LUCCI
No. E 8140
Exp. 09/30/2024
ELECTRICAL
STATE OF CALIFORNIA

LICENSED ARCHITECT
JEAN ANN AMADOR
C-22205
APRIL 30, 2025
DATE
STATE OF CALIFORNIA

12/08/2023 - DSA RESUBMITTAL

SHEET TITLE:

ADMIN BUILDING SITE LIGHTING PLAN - EGRESS

PROJECT NO.: 21-MPC-040	PROJECT ARCH:
DRAWN: LK/DS	CHECKED:

SHEET NUMBER:

E130

DATE: 12/08/23 SHEET: ___ OF ___

IF THIS SHEET IS NOT 30" X 42", IT IS NOT FULL SIZE, SCALE ACCORDINGLY
L.A.I.# 21-375

Copyright Lucci and Associates Consulting Electrical Engineers. Deviations from this drawing will not be made without their expressed written permission.

DRAFTER: CM01 DRAWING FILENAME: 21-375E130 PATHNAME: G:\21\375\EL\Sheets DATE: 18 December 2023 TIME: 8:30 am

Drafter: CM01 Plot Date: 12/8/2023
Drawing: G:\21\375\EL\Sheets\21-375E130.dwg
Date: 12/8/2023 8:58am
Plot Scale: 1:1 Plot Style: ACAD.ctb
WWW.CTLSOFTWARE.COM
WWW.CTLSOFTWARE.COM\TRADEMARKS\LICENSES\LICENSE.htm

Drafter: CM01; G:\21\375\EL\Sheets\21-375E130.dwg; DATE: DEC 08, 2023 TIME: 9:58 AM

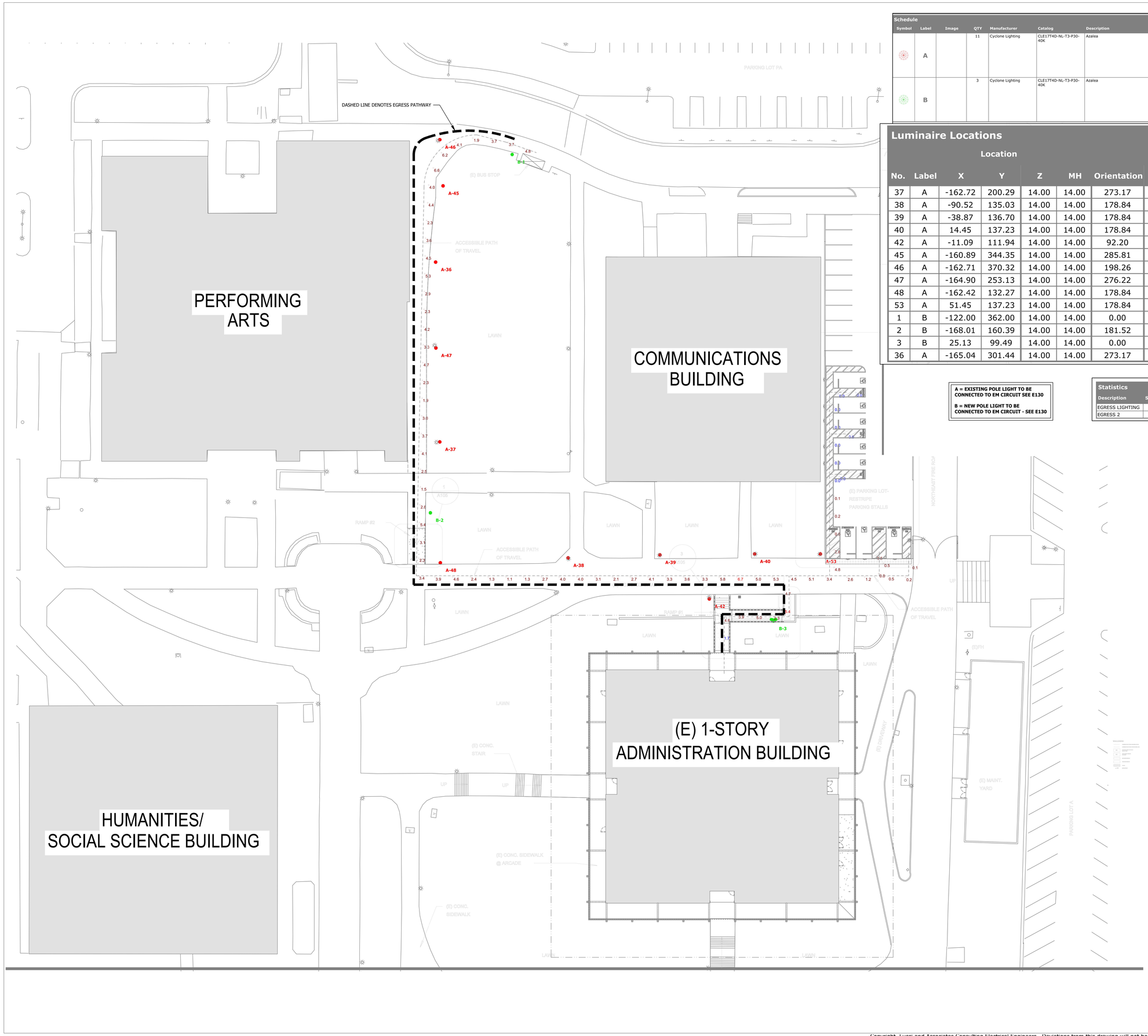

Schedule

Symbol	Label	Image	QTY	Manufacturer	Catalog	Description	Number Lamps	Lamp Output	LLF	Input Power	Polar Plot
	A		11	Cyclone Lighting	CLE17T4D-NL-T3-P30-40K	Azalea	1	5207	0.92	43.8	Max: 3244cd
	B		3	Cyclone Lighting	CLE17T4D-NL-T3-P30-40K	Azalea	1	5207	0.92	43.8	Max: 3244cd

Luminaire Locations

No.	Label	Location X	Location Y	Location Z	MH	Orientation	Tilt	Aim X	Aim Y	Aim Z
37	A	-162.72	200.29	14.00	14.00	273.17	0.00	-162.72	200.29	0.00
38	A	-90.52	135.03	14.00	14.00	178.84	0.00	-90.52	135.03	0.00
39	A	-38.87	136.70	14.00	14.00	178.84	0.00	-38.87	136.70	0.00
40	A	14.45	137.23	14.00	14.00	178.84	0.00	14.45	137.23	0.00
42	A	-11.09	111.94	14.00	14.00	92.20	0.00	-11.09	111.94	0.00
45	A	-160.89	344.35	14.00	14.00	285.81	0.00	-160.89	344.35	0.00
46	A	-162.71	370.32	14.00	14.00	198.26	0.00	-162.71	370.32	0.00
47	A	-164.90	253.13	14.00	14.00	276.22	0.00	-164.90	253.13	0.00
48	A	-162.42	132.27	14.00	14.00	178.84	0.00	-162.42	132.27	0.00
53	A	51.45	137.23	14.00	14.00	178.84	0.00	51.45	137.23	0.00
1	B	-122.00	362.00	14.00	14.00	0.00	0.00	-122.00	362.00	0.00
2	B	-168.01	160.39	14.00	14.00	181.52	0.00	-168.01	160.39	0.00
3	B	25.13	99.49	14.00	14.00	0.00	0.00	25.13	99.49	0.00
36	A	-165.04	301.44	14.00	14.00	273.17	0.00	-165.04	301.44	0.00

A = EXISTING POLE LIGHT TO BE CONNECTED TO EM CIRCUIT SEE E130

B = NEW POLE LIGHT TO BE CONNECTED TO EM CIRCUIT - SEE E130

Statistics

Description	Symbol	Avg	Max	Min	Max/Min	Avg/Min
EGRESS LIGHTING	+	2.8 fc	6.7 fc	1.1 fc	N/A	N/A
EGRESS 2	+	3.9 fc	5.4 fc	1.7 fc	3.2:1	2.3:1

DIVISION OF THE STATE ARCHITECT

IDENTIFICATION STAMP
DIV. OF THE STATE ARCHITECT
APP: 03-123218 INC:
REVIEWED FOR
SS ☑ FLS ☑ ACS ☑
DATE: 07/11/2024

AMADOR WHITTLE
ARCHITECTS, INC.
28328 AGOURA ROAD, SUITE 203
AGOURA HILLS, CA 91301
(805) 530-3938 , (818) 874-0071

Ventura County Community College

PROJECT TITLE

MOORPARK COLLEGE ADMINISTRATION BUILDING RENOVATION

7075 CAMPUS ROAD
MOORPARK, CA 91320

CONSULTANT

LUCCI & ASSOCIATES INC.
CONSULTING ELECTRICAL ENGINEERS
3261 CORTE MALPASO, #511
CAMARILLO, CA 93012-8094
(805) 389-6520 FAX (805) 389-6519

LUCCI & ASSOCIATES, INC. reserve their commonlaw copyright and other property rights in these plans. These plans and drawings are not to be reproduced, changed, or copied in any form or manner whatsoever without first obtaining the expressed written permission and consent of LUCCI & ASSOC. INC nor are they to be assigned to any third party without obtaining said written permission and consent.

STAMPS/SEALS

REGISTERED PROFESSIONAL ENGINEER
KENNETH W. LUCCI
C-18240
Exp. 09/30/2024
ELECTRICAL
STATE OF CALIFORNIA

LICENSED ARCHITECT
JEAN ANN AMADOR
C-22205
APRIL 30, 2025
DATE
STATE OF CALIFORNIA

12/08/2023 - DSA RESUBMITTAL

SHEET TITLE:

ADMIN BUILDING LIGHTING -EMERGENCY PHOTOMETRIC

PROJECT NO: 21-MPC-040	PROJECT ARCH:
DRAWN: LK/DS	CHECKED:

SHEET NUMBER:

E131

DATE: 12/08/23 SHEET: ____ OF ____

IF THIS SHEET IS NOT 30" X 42", IT IS NOT FULL SIZE, SCALE ACCORDINGLY

L.A.I.# 21-375

Copyright Lucci and Associates Consulting Electrical Engineers. Deviations from this drawing will not be made without their expressed written permission.

DRAFTER: CM01 DRAWING FILENAME: 21-375E131 PATHNAME: G:\21\375\EL\Sheets DATE: 18 December 2023 TIME: 8:30 am

Drafter:CM01 Paper Size: ISO A0
Drawing Scale: 1:1 Date: 12/18/2023
File: 21-375E131.dwg
Plot Style: Color.ctb
Layout: E131 Plot Date: 12/18/2023 11:09 AM
WBPR:G:\21\375\Layouts\21-375E131.dwg
WBPR:G:\21\375\Layouts\21-375E131.dwg

Plotter: lee: G:\05\B33\EL\SHEETS\PHASE 3\B33P3E4-20.dwg: DATE: OCT 21, 2008 TIME: 8:14 AM

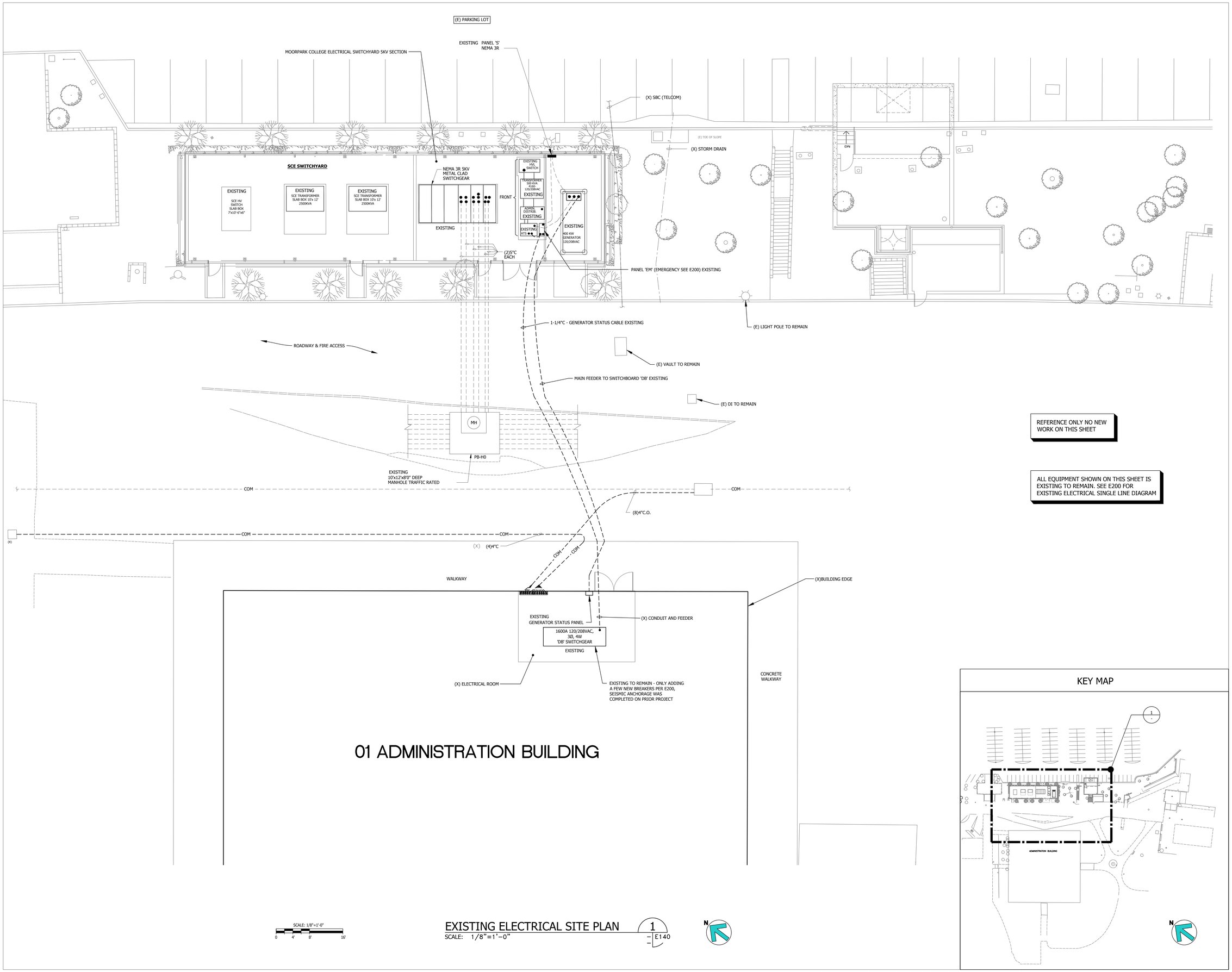

EXISTING ELECTRICAL SITE PLAN 1 E140
SCALE: 1/8"=1'-0"

KEY MAP

DIVISION OF THE STATE ARCHITECT

IDENTIFICATION STAMP
DIV. OF THE STATE ARCHITECT
APP: 03-123218 INC:
REVIEWED FOR
SS ☑ FLS ☑ ACS ☑
DATE: 07/11/2024

AMADOR WHITTLE
ARCHITECTS, INC.
28328 AGOURA ROAD, SUITE 203
AGOURA HILLS, CA 91301
(805) 530-3938 , (818) 874-0071

Ventura County Community College

PROJECT TITLE

MOORPARK COLLEGE ADMINISTRATION BUILDING RENOVATION

7075 CAMPUS ROAD
MOORPARK, CA 91320

CONSULTANT

LUCCI & ASSOCIATES INC.
CONSULTING ELECTRICAL ENGINEERS
3251 CORTE MALPASO, #511
CAMARILLO, CA 93012-8094
(805) 389-6520 FAX (805) 389-6519

LUCCI & ASSOCIATES, INC. reserve their commonlaw copyright and other property rights in these plans. These plans and drawings are not to be reproduced, changed, or copied in any form or manner whatsoever without first obtaining the expressed written permission and consent of LUCCI & ASSOC. INC nor are they to be assigned to any third party without obtaining said written permission and consent.

STAMPS/SEALS

REGISTERED PROFESSIONAL ENGINEER — KENNETH W. LUCCI — No. E 6148 — Exp. 09/30/2024 — ELECTRICAL — STATE OF CALIFORNIA

LICENSED ARCHITECT — JEAN ANN AMADOR — C-22205 — APRIL 30, 2025 — DATE — STATE OF CALIFORNIA

12/08/2023 - DSA RESUBMITTAL

SHEET TITLE:

EXISTING ELECTRICAL SITE PLAN

PROJECT NO.:	21-MPC-040	PROJECT ARCH:	
DRAWN:	LK/DS	CHECKED:	

SHEET NUMBER:

E140

DATE: 12/08/23 SHEET: ___ OF ___

IF THIS SHEET IS NOT 30" X 42", IT IS NOT FULL SIZE, SCALE ACCORDINGLY
L.A.I.# 21-375

Copyright Lucci and Associates Consulting Electrical Engineers. Deviations from this drawing will not be made without their expressed written permission.

DRAFTER: CM01 DRAWING FILENAME: 21-375E140 PATHNAME: G:\21\375\EL\Sheets DATE: 18 December 2023 TIME: 8:30 am

Drafter:CM01 Paper Size: 42.00
Drawing:G:\21\375\EL\Sheets\21-375E140.dwg
Date:Wed, 12/13/2023
Time:8:30:11 AM
XREF:G:\21\375\EL\XRef\21-375TB.dwg

Drafter: CM01; G:\21\375\EL\Sheets\21-375E140.dwg; DATE: DEC 04, 2023 TIME: 1:29 PM

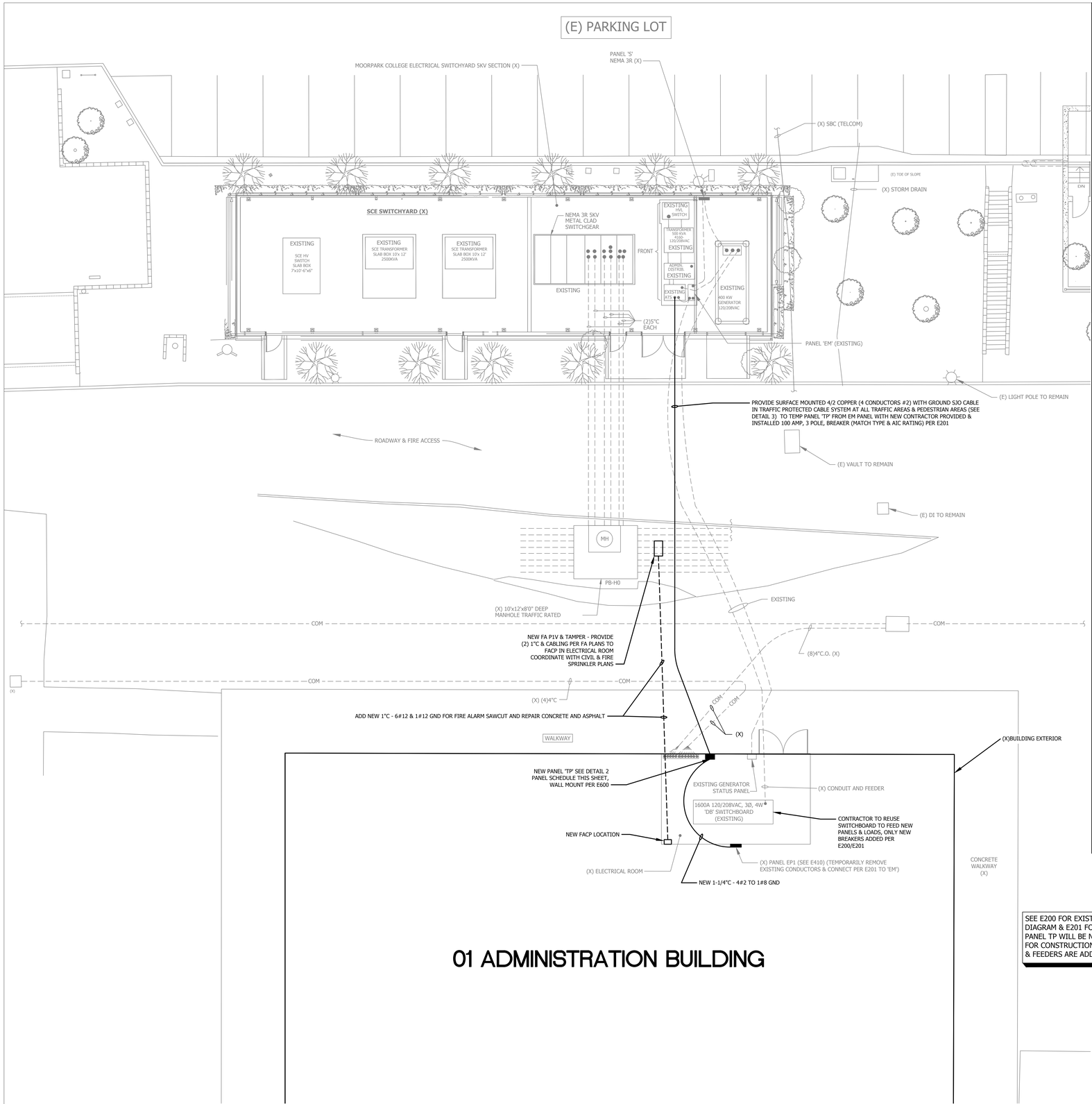

SEE E200 FOR EXISTING ELECTRICAL SINGLE LINE DIAGRAM & E201 FOR NEW ELECTRICAL SINGLE LINE PANEL TP WILL BE NEW & IT IS A TEMPORARY PANEL FOR CONSTRUCTION USE ONLY. A FEW NEW BREAKERS & FEEDERS ARE ADDED TO DISTRIBUTION BOARD DB.

SCALE: 1/8"=1'-0"
0 4' 8' 16'

ELECTRICAL SITE PLAN - NEW WORK (1 / E141)

SCALE: 1/8"=1'-0"

ATLAS® Heavy Duty Cable Protector Ramps

1, 2, 3, & 5 Channels Options, Rated For Vehicles | Industrial Rubber

PROVIDE THESE RAMPS IN ALL TRAFFIC & PEDESTRIAN AREAS

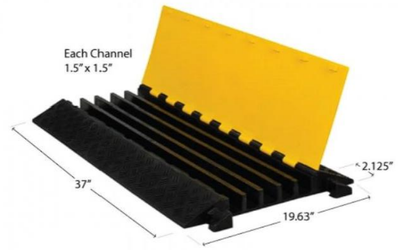

CABLE PROTECTORS (3 / E140)

SCALE: NONE

THIS PANEL IS NOT TO BE USED FOR CONSTRUCTION POWER - IT IS ONLY TO POWER THE SITE COM EQUIPMENT WHICH RESIDES IN THIS BUILDING & IS NOT EASILY RELOCATED.

NEW PANEL (TEMP FOR MPOE/MDF ONLY DURING CONSTRUCTION)

PANEL NUMBER TP — VOLTAGE 120/208 — PHASE 3 — WIRE 4
SOURCE EM — A.I.C. 22 KAIC
PANEL LOCATION ELECTRICAL ROOM — BUS AMPERE RATING 100

■ NEMA 1 ■ COPPER BUSS
■ MAIN CIRCUIT BREAKER 100
■ SURFACE MOUNTING

L.C.L.	MISC.	RCPT.	LITE.	CIRCUIT DESCRIPTION	LOAD(VA) A	LOAD(VA) B	LOAD(VA) C	BRKR POLE	BRKR AMP	CKT	PHASE A B C	CKT	BRKR AMP	BRKR POLE	LOAD(VA) A	LOAD(VA) B	LOAD(VA) C	CIRCUIT DESCRIPTION	MISC.	RCPT.	LITE.	L.C.L.
				.	.			1	20	1		2	20	1	.			.				
				.		.		1	20	3		4	20	1		.		.				
				SPLIT AC1			2000		30	5		6	20	1			.	.				
				↓	2000			2		7		8	20	1	.			.				
				SPLIT AC2		2000			30	9		10	20			.		.				
				↓			2000	2		11		12		2			.	.				
				FC-1	1000				15	13		14	40		.			.				
				↓		1000				15		16				.		.				
				.			.	3		17		18		3			.	.				
				.	.				30	19		20	60		.			.				
				.		.				21		22				.		.				
				.			.	3		23		24		3			.	.				
				.	.				20	25		26	100		5000			PANEL EP1 (MDF ROOM)				
				.		.				27		28				5000		.				
				.			.	3		29		30		3			5000	↓				
				TOTALS	3000	3000	4000								5000	5000	5000	TOTALS				

L.C.L. VOLT AMPS: . PHASE A . PHASE B . PHASE C .
TOTAL VOLT AMPS: 25000 PHASE A 8000 PHASE B 8000 PHASE C 9000
TOTAL AMPS: 70 PHASE A 66 PHASE B 66 PHASE C 75

TP PANEL SCHEDULE (2 / E140)

SCALE: NONE

KEY MAP

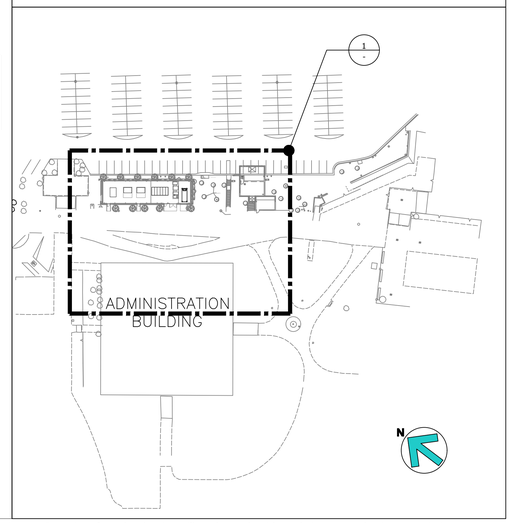

DIVISION OF THE STATE ARCHITECT
IDENTIFICATION STAMP DIV. OF THE STATE ARCHITECT
APP: 03-123218 INC:
REVIEWED FOR
SS ☑ FLS ☑ ACS ☑
DATE: 07/11/2024

AMADOR WHITTLE ARCHITECTS, INC.
28328 AGOURA ROAD, SUITE 203
AGOURA HILLS, CA 91301
(805) 530-3938 , (818) 874-0071

Ventura County Community College

PROJECT TITLE
MOORPARK COLLEGE ADMINISTRATION BUILDING RENOVATION

7075 CAMPUS ROAD
MOORPARK, CA 91320

CONSULTANT
LUCCI & ASSOCIATES INC.
CONSULTING ELECTRICAL ENGINEERS
3251 CORTE MALPASO, #511
CAMARILLO, CA 93012-8094
(805) 389-6520 FAX (805) 389-6519

LUCCI & ASSOCIATES, INC. reserve their commonlaw copyright and other property rights in these plans. These plans and drawings are not to be reproduced, changed, or copied in any form or manner whatsoever without first obtaining the expressed written permission and consent of LUCCI & ASSOC. INC nor are they to be assigned to any third party without obtaining said written permission and consent.

STAMPS/SEALS

REGISTERED PROFESSIONAL ENGINEER KENNETH W. LUCCI No. E-18240 Exp. 06/30/2024 ELECTRICAL STATE OF CALIFORNIA

LICENSED ARCHITECT JOAN ANN AMADOR C-22205 APRIL 30, 2025 DATE STATE OF CALIFORNIA

12/08/2023 - DSA RESUBMITTAL

SHEET TITLE:
ELECTRICAL SITE PLAN - NEW WORK

PROJECT NO.: 21-MPC-040 — PROJECT ARCH.:
DRAWN: LK/DS — CHECKED:
SHEET NUMBER:
E141
DATE: 12/08/23 — SHEET: ___ OF ___

IF THIS SHEET IS NOT 30" X 42", IT IS NOT FULL SIZE, SCALE ACCORDINGLY
L.A.I.# 21-375

Copyright. Lucci and Associates Consulting Electrical Engineers.. Deviations from this drawing will not be made without their expressed written permission..

DRAFTER: CM01 DRAWING FILENAME: 21-375E141 PATHNAME: G:\21\375\EL\Sheets DATE: 18 December 2023 TIME: 8:30 am

Drafter:CM01; Paper Size:42.00 X 30.00 Inches; Plotted On:12-19-23 Date & Time:12-19-23 1:53 PM Plotted By:CM01 Plot Scale:1.0000 WSF:G:\21\375\EL\Sheets\21-375E141.dwg

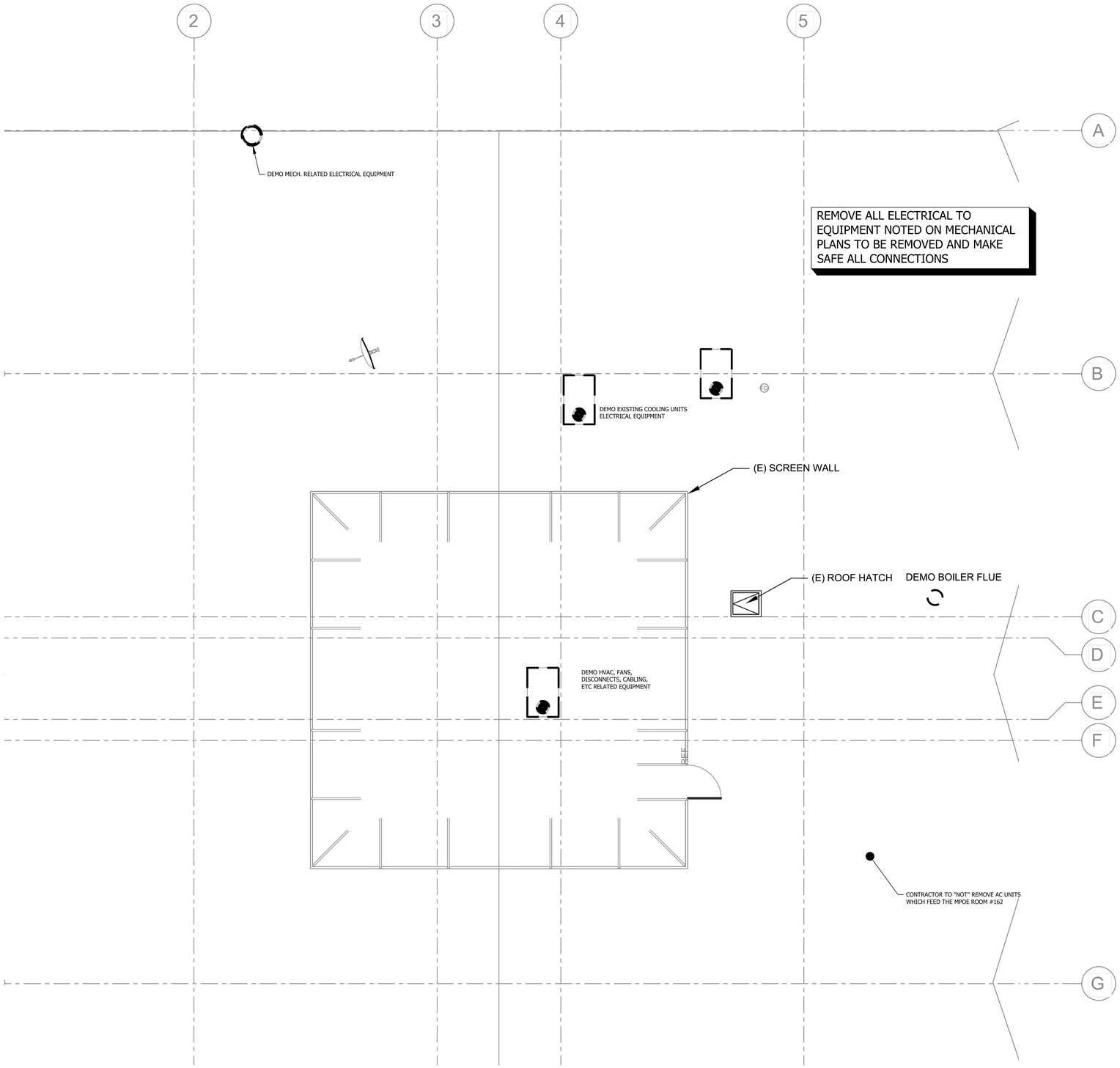

SCALE: 1/4"=1'-0"
0 2' 4' 8'

ELECTRICAL ROOF PLAN - DEMOLITION

1 - E145 -

SCALE: 1/4"=1'-0"

N

KEY MAP

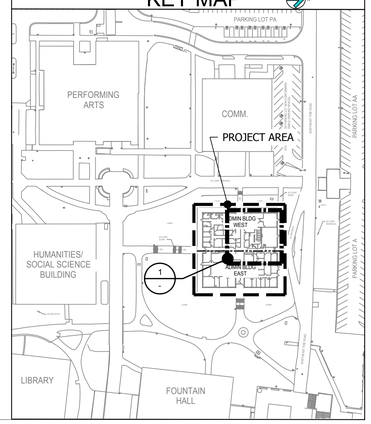

DIVISION OF THE STATE ARCHITECT

IDENTIFICATION STAMP
DIV. OF THE STATE ARCHITECT
APP: 03-123218 INC:
REVIEWED FOR
SS ☑ FLS ☑ ACS ☑
DATE: 07/11/2024

AMADOR WHITTLE
ARCHITECTS, INC.
28328 AGOURA ROAD, SUITE 203
AGOURA HILLS, CA 91301
(805) 530-3938 , (818) 874-0071

Ventura County Community College

PROJECT TITLE

MOORPARK COLLEGE ADMINISTRATION BUILDING RENOVATION

7075 CAMPUS ROAD
MOORPARK, CA 91320

CONSULTANT

LUCCI & ASSOCIATES INC.
CONSULTING ELECTRICAL ENGINEERS
3251 CORTE MALPASO, #511
CAMARILLO, CA 93012-8094
(805) 389-6520 FAX (805) 389-6519

LUCCI & ASSOCIATES, INC. reserve their commonlaw copyright and other property rights in these plans. These plans and drawings are not to be reproduced, changed, or copied in any form or manner whatsoever without first obtaining the expressed written permission and consent of LUCCI & ASSOC. INC nor are they to be assigned to any third party without obtaining said written permission and consent.

STAMPS/SEALS

REGISTERED PROFESSIONAL ENGINEER
KENNETH N. LUCCI
Exp. 09/30/2024
ELECTRICAL
STATE OF CALIFORNIA

LICENSED ARCHITECT
JEAN ANN AMADOR
C-22205
APRIL 30, 2025
DATE
STATE OF CALIFORNIA

12/08/2023 - DSA RESUBMITTAL

SHEET TITLE:

DEMO ROOF PLAN

PROJECT NO: 21-MPC-040	PROJECT ARCH:
DRAWN: LK/DS	CHECKED:

SHEET NUMBER:

E145

DATE: 12/08/23 SHEET: ____ OF ____

IF THIS SHEET IS NOT 30" X 42", IT IS NOT FULL SIZE, SCALE ACCORDINGLY

L.A.I.# 21-375

Copyright Lucci and Associates Consulting Electrical Engineers. Deviations from this drawing will not be made without their expressed written permission

DRAFTER: CM01 DRAWING FILENAME: 21-375E145 PATHNAME: G:\21\375\EL\Sheets DATE: 18 December 2023 TIME: 8:30 am

Drafter: CM01 Paper Size: 1.1.0
Dwg: G:\21\375\EL\Sheets\21-375E145.dwg
Date: 12/08/2023 Time: 9:39 AM
MEP:G:\21\375\EL\parts\21-375.dwg

Drafter: CM01; DATE: APR 14, 2023 TIME: 9:39 AM

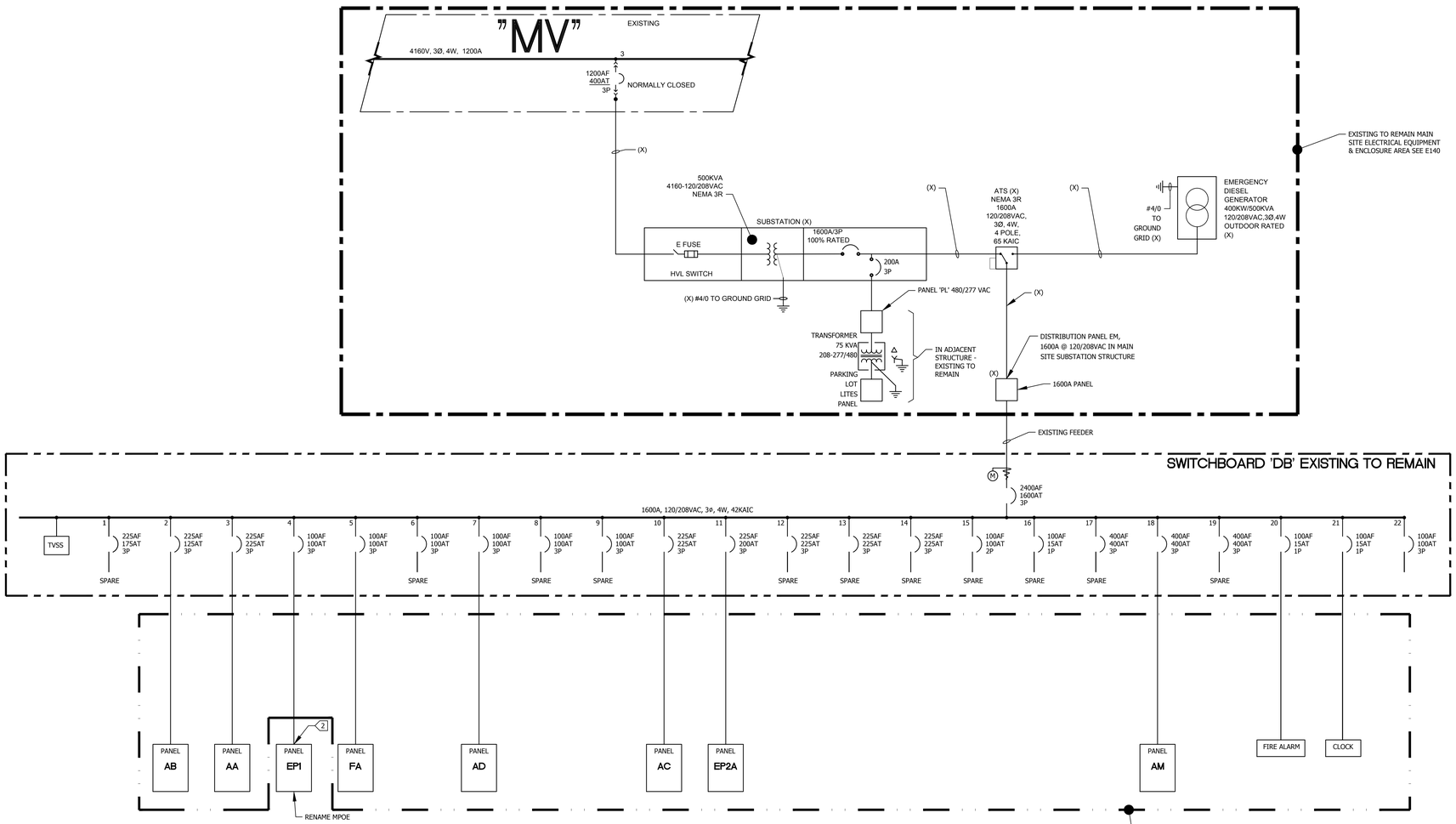

EXISTING ELECTRICAL SINGLE LINE DIAGRAM

SCALE: NONE

2 / E200

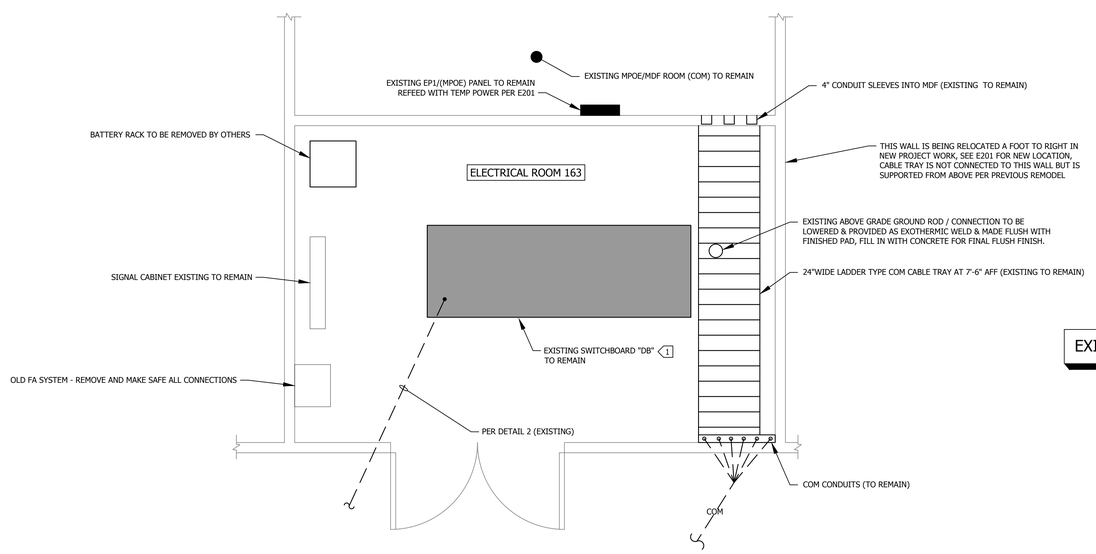

EXISTING - SEE E140 FOR NEW WORK

1/2" - 1'-0"
0 1' 2' 4'

EXISTING ADMINISTRATION BUILDING ELECTRICAL ROOM 160

SCALE: 1/2"=1'-0"

EXISTING CONDITION

1 / E200

N

GENERAL NOTES:

1. CONTRACTOR TO FIELD VERIFY ALL EXISTING CONDITIONS

KEY NOTES:

1. EXISTING 120/208VAC SERVICE ENTRANCE 1600 AMP SWITCHBOARD 'DB' 42KAIC WITH 1600A MAIN.
2. DISCONNECT PANEL EP1 AND CONNECT TO NEW PANEL 'TP' FEED PER E201. FEED TO BE PROVIDED TO MAINTAIN SITE POWER TO ALLOW MDF/MPOE ROOM FOR CAMPUS WIDE COM TO REMAIN ACTIVE DURING PROJECT CONSTRUCTION DURATION.

DIVISION OF THE STATE ARCHITECT

IDENTIFICATION STAMP
DIV. OF THE STATE ARCHITECT
APP: 03-123218 INC:
REVIEWED FOR
SS ☑ FLS ☑ ACS ☑
DATE: 07/11/2024

AMADOR WHITTLE
ARCHITECTS, INC.
28328 AGOURA ROAD, SUITE 203
AGOURA HILLS, CA 91301
(805) 530-3938 , (818) 874-0071

Ventura County Community College

PROJECT TITLE

MOORPARK COLLEGE ADMINISTRATION BUILDING RENOVATION

7075 CAMPUS ROAD
MOORPARK, CA 91320

CONSULTANT

LUCCI & ASSOCIATES INC.
CONSULTING ELECTRICAL ENGINEERS
3251 CORTE MALPASO, #511
CAMARILLO, CA 93012-8094
(805) 389-6520 FAX (805) 389-6519

LUCCI & ASSOCIATES, INC. reserve their commonlaw copyright and other property rights in these plans. These plans and drawings are not to be reproduced, changed, or copied in any form or manner whatsoever without first obtaining the expressed written permission and consent of LUCCI & ASSOC. INC nor are they to be assigned to any third party without obtaining said written permission and consent.

STAMPS/SEALS

REGISTERED PROFESSIONAL ENGINEER
KENNETH W. LUCCI
No. E 24840
Exp. 06/30/2024
ELECTRICAL
STATE OF CALIFORNIA

LICENSED ARCHITECT
ELAYNE ANN AMADOR
C-22205
APRIL 30, 2025
DATE
STATE OF CALIFORNIA

12/08/2023 - DSA RESUBMITTAL

SHEET TITLE:

EXISTING ELEC. SINGLE LINE DIAGRAM & EXISTING ADMIN. BLDG. ELEC. RM.

PROJECT NO.: 21-MPC-040	PROJECT ARCH:
DRAWN: LK/DS	CHECKED:

SHEET NUMBER:

E200

DATE: 12/08/23 SHEET: ___ OF ___

IF THIS SHEET IS NOT 30" X 42", IT IS NOT FULL SIZE, SCALE ACCORDINGLY

L.A.I.# 21-375

Copyright Lucci and Associates Consulting Electrical Engineers. Deviations from this drawing will not be made without their expressed written permission.

PATHNAME: G:\21\375\EL\Sheets DATE: 18 December 2023 TIME: 8:30 am

DRAWING FILENAME: 21-375E200 DRAFTER: CM01

Drafter:CM01; Paper Size: 12.0 X 18.0 Inches; Plot Scale:1.0 X 1.0 X; Date & Time: Dec 08, 2023; 8:30am; User: lucciadmin; W:\EFG\21\375\Layouts\21-375TB.dwg

Drafter: CM01: G:\21\375\EL\Sheets\21-375E200.dwg; DATE: DEC 08, 2023 TIME: 10:01 AM

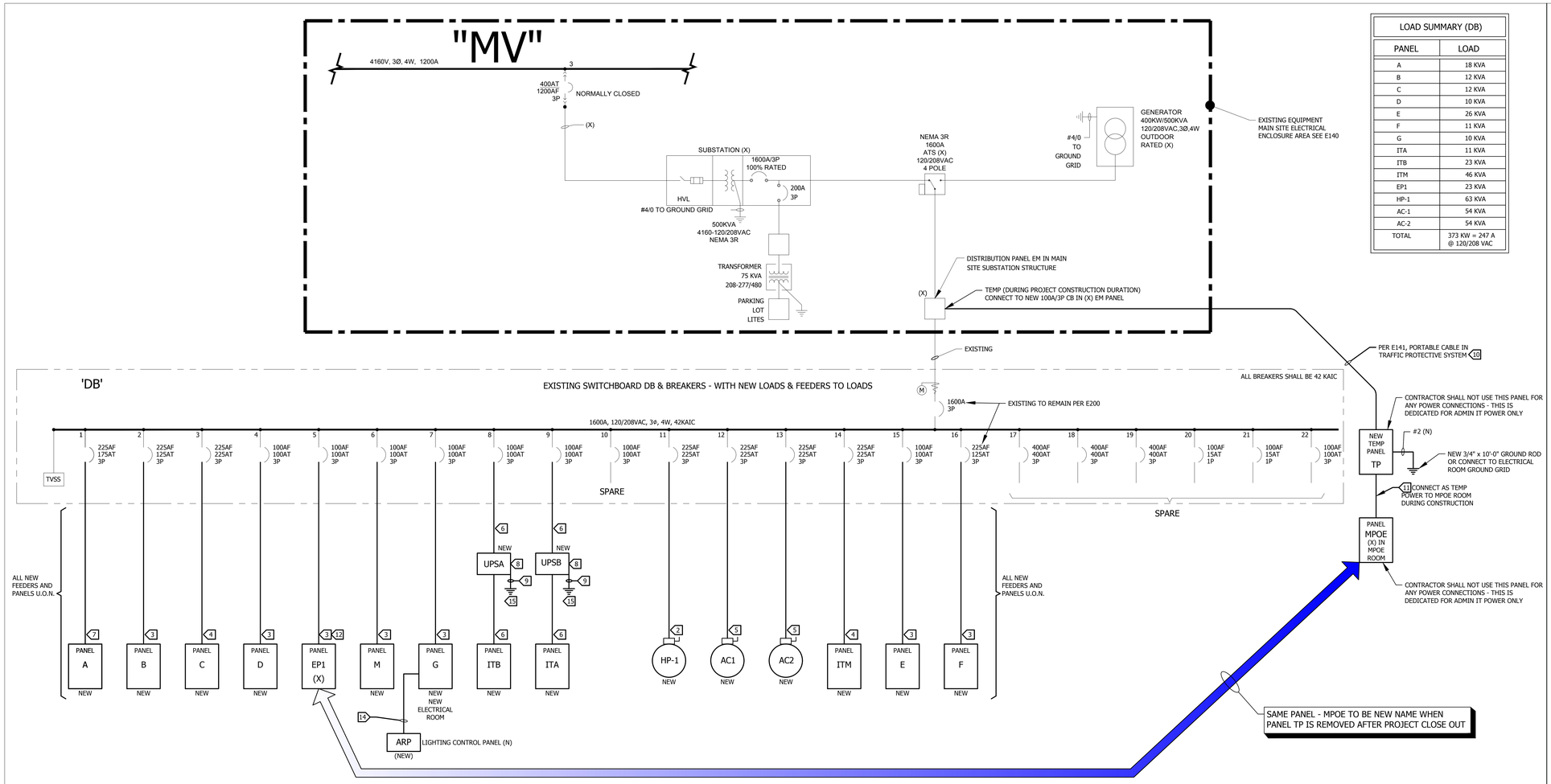

PARTIAL ELECTRICAL SINGLE LINE DIAGRAM 2 - E201

SCALE: NONE

LOAD SUMMARY (DB)	
PANEL	LOAD
A	18 KVA
B	12 KVA
C	12 KVA
D	10 KVA
E	26 KVA
F	11 KVA
G	10 KVA
ITA	11 KVA
ITB	23 KVA
ITM	46 KVA
EP1	23 KVA
HP-1	63 KVA
AC-1	54 KVA
AC-2	54 KVA
TOTAL	373 KW = 247 A @ 120/208 VAC

KEY NOTES (NEW WORK):

1. EXISTING 120/208VAC SERVICE ENTRANCE 1600 AMP SWITCHBOARD 'DB' 42KAIC WITH 1600A MAIN & (10) 100A/3P, (6) 225A/3P, & (3) 400A/3P CB OVER EXISTING SECONDARY CONDUITS.
2. NEW: 2-1/2"C - 3#4/0 & 1#4 GND COPPER (EMT).
3. NEW: 1-1/2"C - 4#1 & 1#8 GND COPPER (EMT).
4. NEW: 2-1/2"C - 4#4/0 & 1#4 GND COPPER (EMT).
5. NEW: 2-1/2"C - 3#4/0 & 1#4 GND COPPER (EMT).
6. NEW: 1-1/2"C - 4#1/0 & 1#4 GND & 1#4 ISO GND COPPER (EMT).
7. NEW: 2"C - 4#2/0 & 1#6 GROUND EMT.
8. UPS SYSTEM PROVIDED BY CAMPUS IT DEPARTMENT BUT CONTRACTOR INSTALLED & CONNECTED.
9. 3/4" PVC WITH #1/0 ISO GROUND TO DP GROUND.
10. JACKETED SJO WP CABLE WITH 4#1 & 1#8 GROUND
11. (N) 1-1/4"C - 4#2 & 1#8 GND.
12. RECONNECT EXISTING FEEDER AT COMPLETION OF PROJECT.
13. LOCATION OF EXISTING GROUND ROD WITH RO1 END ABOVE GRADE BY ABOUT 12 INCHES. CUT ROD AND RECONNECT VIA EXOTHERMIC WELD TO GROUND CONDUCTOR SO FINISHED GROUND ROD TOP IS BELOW GRADE. CAP WITH CONCRETE FLUSH TO GRADE.
14. 1"C - 10#10 & 1#10 GND (NEW)
15. (3) 3/4" x 10'-0" GROUND RODS SPACED 15'-0" APART WITH GROUND WELLS PER E600 SERIES ALL CAD WELDED & CONNECTED TOGETHER, CONNECT UPSA & UPSB GROUNDS TOGETHER WITH 1/0 COPPER.

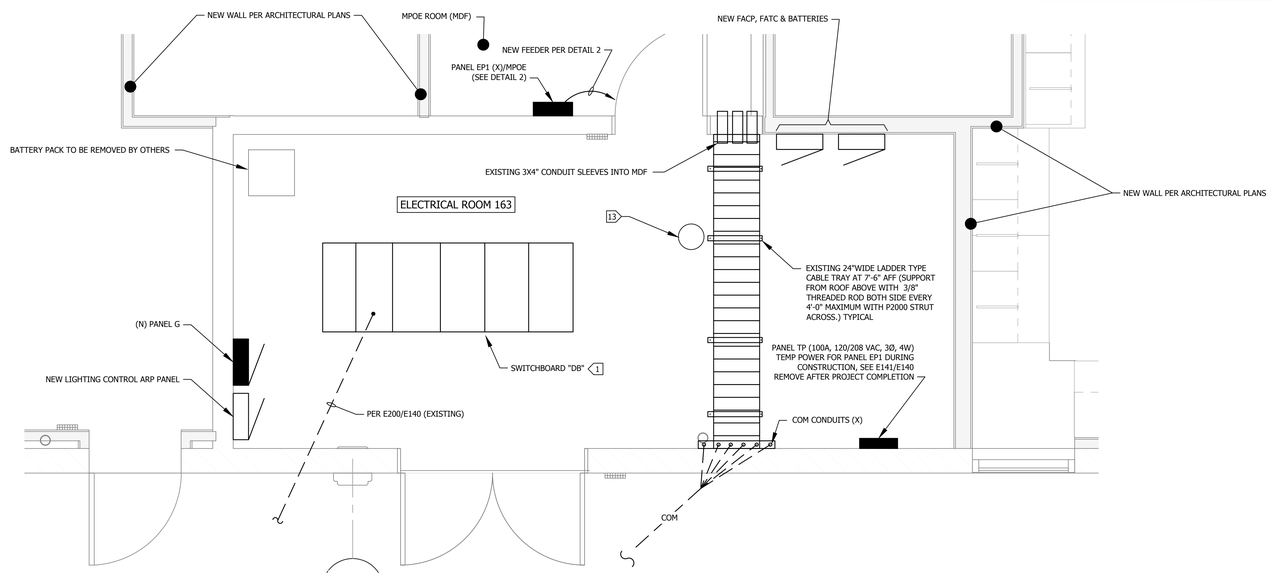

ADMINISTRATION BUILDING ELECTRICAL ROOM 163 1 - E201

SCALE: 1/2"=1'-0" NEW WORK CONDITION

1/2" - 1'-0"
0 1' 2' 4'

N

DIVISION OF THE STATE ARCHITECT
IDENTIFICATION STAMP
DIV. OF THE STATE ARCHITECT
APP: 03-123218 INC:
REVIEWED FOR
SS ☑ FLS ☑ ACS ☑
DATE: 07/11/2024

AMADOR WHITTLE
ARCHITECTS, INC.
28328 AGOURA ROAD, SUITE 203
AGOURA HILLS, CA 91301
(805) 530-3938 , (818) 874-0071

Ventura County Community College

PROJECT TITLE
MOORPARK COLLEGE ADMINISTRATION BUILDING RENOVATION

7075 CAMPUS ROAD
MOORPARK, CA 91320

CONSULTANT
LUCCI & ASSOCIATES INC.
CONSULTING ELECTRICAL ENGINEERS
3251 CORTE MALPASO, #511
CAMARILLO, CA 93012-8094
(805) 389-6520 FAX (805) 389-6519

LUCCI & ASSOCIATES, INC. reserve their commonlaw copyright and other property rights in these plans. These plans and drawings are not to be reproduced, changed, or copied in any form or manner whatsoever without first obtaining the expressed written permission and consent of LUCCI & ASSOC. INC nor are they to be assigned to any third party without obtaining said written permission and consent.

STAMPS/SEALS

REGISTERED PROFESSIONAL ENGINEER — KENNETH W. LUCCI — C-12210 — Exp. 09/30/2024 — ELECTRICAL — STATE OF CALIFORNIA

LICENSED ARCHITECT — SUSAN ANN AMADOR — C-22205 — APRIL 30, 2025 — DATE — STATE OF CALIFORNIA

12/08/2023 - DSA RESUBMITTAL

SHEET TITLE:
ADMIN. BLDG. ELEC. RM. & PARTIAL ELEC. SINGLE LINE DIAGRAM - NEW WORK

PROJECT NO.: 21-MPC-040	PROJECT ARCH:
DRAWN: LK/DS	CHECKED:

SHEET NUMBER:
E201

DATE: 12/08/23 SHEET: ___ OF ___

IF THIS SHEET IS NOT 30" X 42", IT IS NOT FULL SIZE, SCALE ACCORDINGLY
L.A.I.# 21-375

Copyright Lucci and Associates Consulting Electrical Engineers. Deviations from this drawing will not be made without their expressed written permission.

DRAFTER: CM01 DRAWING FILENAME: 21-375E201 PATHNAME: G:\21\375\ELI\Sheets DATE: 18 December 2023 TIME: 8:30 am

Drafter:CM01 Page Size: 12.0
Drawing: G:\21\375\ELI\Sheets\21-375E201.dwg
Date/Time: 12/08/2023 3:05 PM
Layout: E201
WIDTH:42.00 HEIGHT:30.00
Xref(s): G:\21\375\ELI\Xrefs\21-375TB.dwg
G:\21\375\ELI\Xrefs\21-375E140.dwg

Drafter: CM01: G:\21\375\ELI\Sheets\21-375E201.dwg: DATE: DEC 06, 2023 TIME: 3:05 PM