REPLACE EXISTING HVAC EQUIPMENT IN MATH & SCIENCE COMPLEX

VENTURA COLLEGE

4667 TELEGRAPH ROAD
VENTURA , CALIFORNIA, 93003

PROJECT DIRECTORY

MECHANICAL ENGINEER:
J&S Consulting Engineers, Inc.
3111 Winona Ave., Suite 102, Burbank, CA 91504
Tel.: (818) 841-0303 Fax: (818) 841-8531
E-Mail: jsmail@jandsconsulting.com
Web Site: www.jandsconsulting.com

ELECTRICAL ENGINEER:
J&S Consulting Engineers, Inc.
3111 Winona Ave., Suite 102, Burbank, CA 91504
Tel.: (818) 841-0303 Fax: (818) 841-8531
E-Mail: jsmail@jandsconsulting.com
Web Site: www.jandsconsulting.com

SYSTEM PERFORMANCE/COMMISSIONING
Green Link Mechanical
P.O, Box 2705
Downey, CA 90242
E-Mail: glmhvac@gmail.com

ARCHITECT
Amador Whittle Architects, Inc.
28328 Agoura Road, Suite 203, Agoura Hills, CA 91301
Tel.: (805) 530-3938
E-Mail: bill@awaarchitect.com

STRUCTURAL ENGINEER:
Orion Structural Group, Inc.
223 E. Thousand Oaks Blvd., #220, Thousand Oaks, CA 91560
Tel.: (805) 390-9242
E-Mail: will@orionstructural.com

OWNER AUTHORIZED REPRESENTATIVE (OAR)
VENTURA COLLEGE
Director of Facilities– Jay Moore
4667 Telegraph Road, Ventura, CA 93003
Tel.: (805) 289-6340
E-Mail: jmoore1@vcccd.edu

SHEET INDEX

No.	Sheet No.	Description
1.	T-0.1	TITLE SHEET
		ARCHITECTURAL
2.	A0.00	GENERAL NOTES & VICINITY MAP
3.	A1.00	CAMPUS SITE PLAN
4.	A1.01	SITE PLAN & SCOPE SUMMARY
5.	A1.02	FIRST FLOOR PLAN
6.	A1.03	PARTIAL SECOND FLOOR PLAN
7.	A1.04	PARTIAL THIRD FLOOR FLOOR PLAN
8.	A1.05	FIRST FLOOR DEMOLITION REFLECTED CEILING PLAN
9.	A1.06	FIRST FLOOR NEW REFLECTED CEILING PLAN
10.	A1.07	PARTIAL SECOND FLOOR REFLECTED CEILING PLAN
11.	A1.08	PARTIAL THIRD FLOOR DEMOLITION REFLECTED CEILING PLAN
12.	A1.09	PARTIAL THIRD FLOOR NEW REFLECTED CEILING PLAN
13.	A1.10	BIOLOGY LECTURE ROOM-ENLARGED RCP PLANS, INT. ELEVS, WALL SECTIONS & DETAILS
14.	A1.11	ENLARGED PARTIAL FLOOR PLANS - BUILDINGS 'B' & 'C'
15.	A1.12	BUILDINGS 'A' AND 'B' DEMOLITION (UNDERSIDE OF ROOF) PLAN
16.	A1.13	BUILDINGS 'A' AND 'B' NEW (UNDERSIDE OF ROOF) PLAN
17.	A1.14	BUILDING 'C' DEMOLITION & NEW (UNDERSIDE OF ROOF) PLANS
18.	A1.15	BUILDINGS 'A' AND 'B' DEMOLITION ROOF PLAN
19.	A1.16	BUILDINGS 'A' AND 'B' NEW ROOF PLAN
20.	A1.17	BUILDING 'C' DEMOLITION & NEW ROOF PLANS
21.	A3.01	BUILDING SECTIONS
22.	A3.02	WALL SECTIONS & SOUTH ELEVATION OF BLDG 'B'
23.	A5.01	INTERIOR AND ROOF DETAILS
24.	A5.02	ROOF DETAILS
25.	A5.03	CEILING DETAILS
26.	A5.04	CEILING DETAILS
27.	A5.05	GYPSUM BOARD CEILING DETAILS
28.	A5.06	CEILING & MISCELLANEOUS DETAILS
		STRUCTURAL
29.	S-0.0	GENERAL NOTES
30.	S-0.1	GENERAL NOTES
31.	S-1.3	STRUCTURAL ENLARGED PLANS
32.	S-2.2	PARTIAL 3RD FLOOR FRAMING PLAN
33.	S-4.2	ROOF FRAMING PLAN
34.	S-4.3	ROOF FRAMING PLAN
35.	S-5.0	STRUCTURAL DETAILS
36.	S-5.1	STRUCTURAL DETAILS
37.	S-5.2	STRUCTURAL DETAILS
38.	S-5.3	STRUCTURAL DETAILS

No.	Sheet No.	Description
		MECHANICAL
39.	M-0.1	HVAC LEGEND AND GENERAL NOTES
40.	M-0.2	HVAC SYSTEM EQUIPMENT SCHEDULES
41.	M-1.1	MECHANICAL FIRST FLOOR DEMOLITION PLAN
42.	M-1.2	MECHANICAL FIRST FLOOR PLAN
43.	M-1.3	MECHANICAL ENLARGED PLANS
44.	M-2.1	MECHANICAL SECOND FLOOR DEMOLITION PLAN
45.	M-2.2	MECHANICAL SECOND FLOOR PLAN
46.	M-3.1	MECHANICAL THIRD FLOOR DEMOLITION PLAN
47.	M-3.2	MECHANICAL THIRD FLOOR PLAN
48.	M-3.3	MECHANICAL THIRD FLOOR PIPING PLAN
49.	M-4.1	BUILDINGS "A" AND "B" MECHANICAL ROOF DEMOLITION PLAN
50.	M-4.2	BUILDINGS "A" AND "B" MECHANICAL ROOF PLAN
51.	M-4.3	BUILDING "C" MECHANICAL ROOF PLANS
52.	M-5.1	MECHANICAL DETAILS
53.	M-6.1	CHILLED WATER PIPING DIAGRAMS
54.	M-6.2	HOT WATER PIPING DIAGRAMS
55.	M-7.1	MECHANICAL CONTROL DETAILS AND DIAGRAMS
56.	M-7.2	MECHANICAL CONTROL DETAILS AND DIAGRAMS
57.	M-7.3	MECHANICAL CONTROL DETAILS AND DIAGRAMS
58.	M-8.1	MECHANICAL EQUIPMENT SUPPORT DETAILS
59.	M-8.2	MECHANICAL EQUIPMENT SUPPORT DETAILS
60.	M-8.3	MECHANICAL EQUIPMENT SUPPORT DETAILS
61.	M-9.1	MECHANICAL TITLE-24 COMPLIANCE FORMS (BLDG. "A")
62.	M-9.2	MECHANICAL TITLE-24 COMPLIANCE FORMS (BLDG. "A")
63.	M-9.3	MECHANICAL TITLE-24 COMPLIANCE FORMS (BLDG. "A")
64.	M-9.4	MECHANICAL TITLE-24 COMPLIANCE FORMS (BLDG. "B & C")
65.	M-9.5	MECHANICAL TITLE-24 COMPLIANCE FORMS (BLDG. "B & C")
66.	M-9.6	MECHANICAL TITLE-24 COMPLIANCE FORMS (BLDG. "B & C")
67.	M-9.7	MECHANICAL TITLE-24 COMPLIANCE FORMS (BLDG. "B & C")
68.	M-9.8	MECHANICAL TITLE-24 COMPLIANCE FORMS (BLDG. "B & C")
69.	M-9.9	MECHANICAL TITLE-24 COMPLIANCE FORMS (BLDG. "B & C")
		PLUMBING
70.	P-1.1	PLUMBING LEGEND, GENERAL NOTES, GAS PIPING PLANS, RISER DIAGRAM AND DETAILS
71.	P-2.1	PLUMBING PLANS
		ELECTRICAL
72.	E-0.1	ELECTRICAL SYMBOL LIST AND GENERAL NOTES
73.	E-1.1	FIRST FLOOR ELECTRICAL PLAN
74.	E-1.2	BUILDING "C" MECHANICAL ROOM ELECTRICAL PLANS
75.	E-2.1	SECOND FLOOR ELECTRICAL PLAN
76.	E-3.1	THIRD FLOOR ELECTRICAL PLAN
77.	E-4.1	ELECTRICAL ROOF DEMOLITION PLAN
78.	E-4.2	ELECTRICAL ROOF PLAN
79.	E-4.3	BUILDING "C" ELECTRICAL ROOF PLANS
80.	E-5.1	SINGLE LINE DIAGRAM- AS EXISTING
81.	E-5.2	SINGLE LINE DIAGRAM- AS MODIFIED
82.	E-5.3	PANEL SCHEDULES

PROJECT DATA

BUILDINGS "A", "B" & "C"

PAST DSA APPLICATION #A-60113- 2/18/94
BUILDING: OCCUPANCY TYPE B
CONSTRUCTION TYPE: TYPE V CONSTRUCTION
ROOF ASSEMBLY: METAL DECK W/COMPOSITE INSULATING CONCRETE
FLOOR ASSEMBLY: METAL DECK W/LIGHTWEIGHT CONCRETE
FIRE SPRINKLER: YES
FIRE ALARM SYSTEM: YES (FULLY AUTOMATIC)

PROJECT DESCRIPTION

ONLY HVAC SYSTEM AND HVAC RELATED WORK AT BUILDINGS "A", "B" AND "C".

GENERAL REQUIREMENTS

1. ALL WORK SHALL CONFORM TO 2013 EDITION TITLE 24, CALIFORNIA CODE OF REGULATIONS (CCR).
2. CHANGES TO THE APPROVED DRAWINGS AND SPECIFICATIONS SHALL BE MADE BY AN ADDENDA OR A CONSTRUCTION CHANGE DOCUMENTS (CCD) APPROVED BY THE DIVISION OF THE STATE ARCHITECT, AS REQUIRED BY SECTION 4-338, PART 1, TITLE 24,CCR.
3. A 'DSA CERTIFIED' PROJECT INSPECTOR EMPLOYED BY DISTRICT (OWNER) AND APPROVED BY THE DIVISION OF THE STATE ARCHITECT SHALL PROVIDE CONTINUOUS INSPECTION OF THE WORK. THE DUTIES OF THE INSPECTOR ARE DEFINED IN SECTION 4-342, CALIFORNIA BUILDING STANDARDS ADMINISTRATIVE CODE (PART 1, TITLE 24, CCR).
4. A 'DSA CERTIFIED' CLASS 3 PROJECT INSPECTOR IS REQUIRED FOR THIS PROJECT
5. DSA INSPECTION AND CERTIFICATION IS REQUIRED FOR THIS PROJECT.
6. ALL WORK SHALL BE IN COMPLIANCE W/2013 CFC.
7. A DSA ACCEPTED TESTING LABORATORY DIRECTLY EMPLOYED BY THE SCHOOL BOARD SHALL CONDUIT ALL THE REQUIRED TESTS AND INSPECTIONS FOR THE PROJECT.
8. THE INTENT OF THESE DRAWINGS AND SPECIFICATIONS IS THAT THE WORK OF THE ALTERATION, REHABILITATION OR RECONSTRUCTION IS TO BE IN ACCORDANCE WITH TITLE 24, CALIFORNIA CODE OF REGULATION SHOULD ANY EXISTING CONDITIONS SUCH AS DETERIORATION OR NON-COMPLYING CONSTRUCTION BE DISCOVERED WHICH IS NOT COVERED BY THE CONTRACT DOCUMENTS WHEREIN THE FINISHED WORK WILL NOT COMPLY WITH TITLE 24, CALIFORNIA CODE OF REGULATIONS, A CHANGE ORDER, OR A SEPARATE SET OF PLANS AND SPECIFICATIONS, DETAILING AND SPECIFYING THE REQUIRED WORK SHALL BE SUBMITTED TO AND APPROVED BY THE DIVISION OF THE STATE ARCHITECT BEFORE PROCEEDING WITH THE WORK. (REFERENCE: SECTION 4-317(e), CALIFORNIA BUILDING STANDARDS ADMINISTRATIVE CODE (PART 1, TITLE 24, CCR)
9. POWDER DRIVEN SHOT PINS SHALL NOT BE USED.
10. THE OWNER'S AUTHORIZED REPRESENTATIVE SHALL NOTIFY THE PROJECT MANAGER AS TO THE ESTABLISHED CONSTRUCTION START DATE. THIS NOTICE SHALL BE PROVIDED A MINIMUM OF TWO WEEKS PRIOR TO THE ESTABLISHED CONSTRUCTION START DATE.
11. THE CONTRACTOR SHALL PROVIDE SUBMITTALS TO THE OWNER'S PROJECT MANAGER IN QUANTITIES & FORMAT IDENTIFIED WITHIN CONTRACT SPECIFICATION SUBMITTALS. SUBMITTALS WHICH DO NOT FOLLOW THE PRESCRIBED FORMAT SHALL BE RETURNED, WITHOUT REVIEW TO THE CONTRACTOR.
12. THE INSPECTOR OF RECORD, PROJECT MANAGER AND ENGINEER OF RECORD SHALL BE NOTIFIED WHEREVER SCOPE OF WORK IS PROPOSED TO BE DELETED AND/OR ADDED TO DSA APPROVED BID DOCUMENTS (PRIOR TO WORK BEING PERFORMED) ANY PROPOSED CHANGED TO DSA APPROVED BID DOCUMENTS SHALL BE SUBMITTED AS CONSTRUCTION CHANGE DOCUMENT (CCD) TO DSA FOR REVIEW AND APPROVAL, PRIOR PERFORMING PROPOSED CHANGES.
13. SEISMIC BRACING OF ALL NEW PIPING AND DUCTWORK SHALL BE DESIGN-BUILD BY THE CONTRACTOR. THE CONTRACTOR SHALL SUBMIT ENGINEERED DRAWINGS BEARING THE ENGINEER'S STAMP & SIGNATURE FOR ALL PROPOSED SEISMIC RESTRAINT SYSTEMS.

SPECIAL NOTES FOR DEMOLITION

1. CONTRACTOR SHALL VISIT THE SITE BEFORE BIDDING AND SHALL MAKE ALLOWANCES TO INCLUDE ON THE BASE BID, THE DISMANTLING AND REMOVAL OF ALL COMPONENTS AND ACCESSIBLE ITEMS FOR THE EXISTING SYSTEMS, AFTER NEW SYSTEMS ARE OPERATIONAL.
2. THE PLAN DRAWINGS SHOW MOST OF THE COMPONENTS AND ITEMS FOR GENERAL INFORMATION ONLY. THIS INFORMATION SHALL NOT BE THE ONLY BASIS FOR ESTIMATION.
3. WHEN CEILING SUSPENSION SYSTEMS, EQUIPMENT SUPPORT SYSTEM, LIGHTING FIXTURES, J-BOXES, OR OTHER ITEMS REQUIRED TO BE REMOVED TO PERFORM THE WORK, THE CONTRACTOR SHALL BE RESPONSIBLE FOR REPAINTING OR REPLACING ANY BROKEN OR DAMAGED ITEMS, INCLUDING PATCHING WALLS AND PAINTING AS REQUIRED, TO BRING THE AREA TO ITS ORIGINAL CONDITION.
4. ASBESTOS – IF ANY MATERIALS CONTAINING ASBESTOS ARE PRESENT IN AREA OF WORK, CONTRACTOR TO COORDINATE WITH DISTRICT FOR ASBESTOS ABATEMENT BEFORE BEGINNING WORK.
5. THE CONTRACTOR SHALL BE RESPONSIBLE FOR THE DEMOLITION REQUIRED OF EXISTING CONSTRUCTION AS SHOWN ON PLANS, AND TO PREPARE THE EXISTING STRUCTURE FOR NEW CONSTRUCTION, AND IS ALSO RESPONSIBLE FOR RECONSTRUCTION OF ALL DEMOLISHED CONSTRUCTION AT THE COMPLETION OF PROPOSED CONSTRUCTION.
6. CONTRACTOR SHALL PROVIDE ASBESTOS AND/OR LEAD ABATEMENT, IF ANY IN ACCORDANCE WITH THE REQUIREMENTS OF VENTURA COLLEGE.
7. "MAINTAIN REQUIRED FIRE RESISTANCE RATING OF FIRE-RESISTANCE RATED CONSTRUCTION (HORIZONTAL/ROOF) VISUAL INSPECTION AND PROPERLY REPAIRED, REPLACED WHEN DAMAGED, ALTERED, PENETRATED." – CFC 703.1.
8. OPENING(S) PROTECTIVE(S) SHALL BE MAINTAINED AN AN OPERATIVE CONDITION IN ACCORDANCE WITH NFPA 80. – CFC 703.2.

APPLICABLE CODES

LIST OF 2013 CALIFORNIA CODE OF REGULATIONS (C.C.R.): APPLICABLE CODE AS OF JANUARY 1, 2014

PART 1– 2013 CALIFORNIA BUILDING STANDARD ADMINISTRATIVE CODE, TITLE 24 C.C.R.

PART 2– 2013 CALIFORNIA BUILDING CODE, TITLE 24 C.C.R. (2012 INTERNATIONAL BUILDING CODE OF THE INTERNATIONAL CODE COUNCIL, WITH CALIFORNIA ADMENDMENTS)

PART 3– 2013 CALIFORNIA ELECTRICAL CODE, TITLE 24 C.C.R. (2011 NATIONAL ELECTRICAL CODE OF THE NATIONAL FIRE PROTECTION ASSOCIATION, NFPA)

PART 4– 2013 CALIFORNIA MECHANICAL CODE, TITLE 24 C.C.R. (2012 UNIFORM MECHANICAL CODE OF THE INTERNATIONAL ASSOCIATION OF PLUMBING AND MECHANICAL OFFICIALS, IAPMO)

PART 5– 2013 CALIFORNIA PLUMBING CODE, TITLE 24 C.C.R. (2012 UNIFORM PLUMBING CODE OF THE INTERNATIONAL ASSOCIATION OF PLUMBING AND MECHANICAL OFFICIALS, IAPMO)

PART 6– 2013 CALIFORNIA ENERGY CODE, TITLE 24 C.C.R.

PART 7– CURRENTLY VACANT

PART 8– 2013 CALIFORNIA HISTORICAL BUILDINGS CODE, TITLE 24 C.C.R.

PART 9– 2013 CALIFORNIA FIRE CODE, TITLE 24 C.C.R. (2012 INTERNATIONAL FIRE CODE OF THE INTERNATIONAL CODE COUNCIL)

PART 10– 2013 CALIFORNIA EXISTING BUILDING CODE (2012 INTERNATIONAL EXISTING BUILDING CODE OF THE INTERNATIONAL CODE COUNCIL, WITH AMENDMENTS)

PART 11– 2013 CALIFORNIA GREEN BUILDING STANDARDS CODE (CALGREEN CODE), TITLE 24 C.C.R.

PART 12– 2013 CALIFORNIA REFERENCE STANDARDS CODE, TITLE 24 C.C.R.

PARTIAL LIST OF APPLICABLE STANDARDS

2013 CALIFORNIA BUILDING CODE (FOR SFM) REFERENCED STANDARDS CHAPTER 35

NFPA 13	AUTOMATIC SPRINKLER SYSTEMS (CALIFORNIA AMENDED)	2013 EDITION
NFPA 14	STANDPIPE SYSTEMS (CALIFORNIA AMENDED)	2013 EDITION
NFPA 17	DRY CHEMICAL EXTINGUISHING SYSTEMS	2013 EDITION
NFPA 17a	WET CHEMICAL EXTINGUISHING SYSTEMS	2013 EDITION
NFPA 20	STATIONARY PUMPS	2013 EDITION
NFPA 24	PRIVATE FIRE SERVICE MAINS (CALIFORNIA AMENDED)	2013 EDITION
NFPA 72	NATIONAL FIRE ALARM CODE (CALIFORNIA AMENDED) (NOTE: SEE UL STANDARD 1971 FOR "VISUAL DEVICES")	2013 EDITION
NFPA 80	FIRE DOOR AND OTHER OPENING PROTECTIVES	2013 EDITION
NFPA 253	CRITICAL RADIANT FLUX OF FLOOR COVERING SYSTEMS	2006 EDITION
NFPA 2001	CLEAN AGENT FIRE EXTINGUISHING SYSTEMS	2012 EDITION

DEPARTMENT OF JUSTICE REGULATIONS FOR TITLE II OF THE AMERICANS WITH DISABILITIES ACT OF 1990 WITH REVISED REGULATIONS AS PUBLISHED IN THE FEDERAL REGISTER ON SEPTEMBER 15, 2010, EFFECTIVE MARCH 15, 2012. TITLED ADA STANDARDS FOR ACCESSIBLE DESIGN.

VICINITY MAP

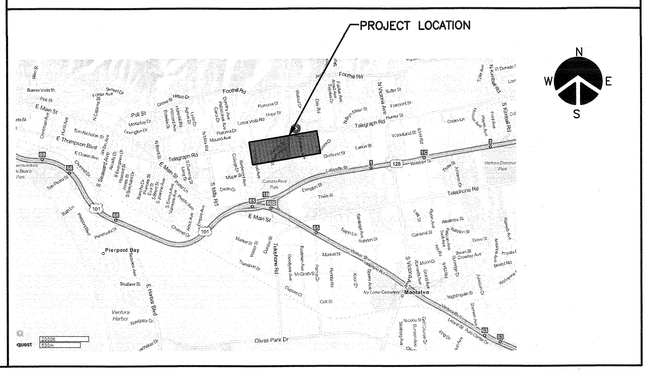
PROJECT LOCATION
N
W
E
S
Telegraph Rd
E Main St
Thompson Blvd
Harbor Blvd
Olivas Park Dr
Pierpont Bay
Ventura Harbor
Seaward Ave
Ventura Ave
Ventura Community College
Mandalay Beach Park
Marina Park
Ventura Pier
Ventura Keys
Mission Park
Ventura Harbor Village
Ventura Marina
Ventura Harbor Boatyard
Ventura Harbor Resort
Ventura Harbor Village Pier
Ventura Harbor Village Marina
Ventura Harbor Village Parking
Ventura Harbor Village Parking Lot
Ventura Harbor Village Parking Lot
Ventura Harbor Village Parking Lot

GENERAL NOTES

1. INTERPRETATION OF CONSTRUCTION DOCUMENTS
   A. ALL INFORMATION DEPICTED IN THESE DRAWINGS AND RELATIVE TO EXISTING CONDITIONS IS BASED ON THE BEST AVAILABLE DATA AT THE TIME THESE CONSTRUCTION DOCUMENTS WERE BEING EXCECUTED, BUT WITHOUT GUARANTEE OF ACCURACY. CONTRACTOR SHALL VERIFY ALL DIMENSIONS AND CONDITIONS AT JOB SITE AND SHALL REPORT ANY DISCREPANICES TO ARCHITECT PRIOR TO COMMENCING ANY WORK.

   B. THE CONTRACTOR IS RESPONSIBLE FOR ALL COSTS INCURRED RESULTING FROM THE REMOVAL OR REPLACEMENT OF WORK INSTALLED WITHOUT PROPER COORDINATION TO ALL OTHER TRADES, AND/OR PRIOR TO OBTAINING CLARIFICATION FROM THE ARCHITECT WHERE CONFLICTING INFORMATION EXISTS ON THE DRAWINGS.

   C. THE CONTRACTOR SHALL FURNISH ALL BIDDERS WITH A COMPLETE SET OF CONSTRUCTION DOCUMENTS, INCLUDING BUT NOT LIMITED TO DRAWINGS, SPECIFICATIONS AND ADDENDUMS.

   D. ALL BIDS AND LINE ITEM COSTS SUBMITTED BY THE CONTRACTOR IN CONJUNCTION WITH HIS SUBCONTRACTORS ARE CONSIDERED TO INCLUDE COMPLETE COORDINATION BETWEEN THE VARIOUS DISCIPLINES AS WELL AS ALL OTHER REQUIREMENTS OF THESE CONSTRUCTION DOCUMENTS, INCLUDING BUT NOT LIMITED TO CODE AND PUBLIC UTILITY REQUIREMENTS. FURTHER, WHERE THERE ARE CONFLICTING SOLUTIONS IN THE CONSTRUCTION DOCUMENTS AND BID OR LINE ITEM COST IS SUBMITTED BY THE CONTRACTOR WITHOUT ANY FORMAL WRITTEN REQUEST FOR CLARIFICATION PRIOR TO BID OPENING, ALL SUCH ITEMS WILL BE CONSIDERED TO INCLUDE THE MOST EXPENSIVE OF THE POSSIBLE SOLUTIONS DEPICTED IN THE CONSTRUCTION DOCUMENTS.

   E. MODIFICATIONS OF DETAILS OF CONSTRUCTION SHALL NOT BE MADE WITHOUT WRITTEN APPROVAL OF THE ARCHITECT AND DSA.

2. CONTRACTOR SHALL VISIT THE SITE TO INVESTIGATE AND VERIFY ALL DIMENSIONS AND EXISTING SITE CONDITIONS AT JOB SITE PRIOR TO START OF WORK.

3. ALL DIMENSIONS INDICATED ARE BELIEVED TO BE ACCURATE, BUT ARE NOT GUARANTEED TO BE SO. CONTRACTOR SHALL FIELD VERIFY ALL DIMENSIONS AND REPORT ANY DISCREPANCIES TO THE ARCHITECT. COORDINATE WITH EXISTING CONDITIONS WHERE INSUFFICIENT DETAIL DIMENSIONS ARE AVAILABLE. ALL DIMENSIONS ARE TO FINISHED FACE OF CONSTRUCTION OR CENTERLINE OF COLUMNS UNLESS NOTED OTHERWISE. DIMENSIONS NOTED AT "CLR" (CLEAR) ARE NOT ADJUSTABLE WITHOUT ARCHITECT'S APPROVAL.

4. DIMENSIONS SHOWN SHALL HAVE PREFERENCE OVER SCALE.

5. ALL ITEMS INCLUDING BUILDINGS SHOWN ARE EXISTING (E) UNLESS NOTED NEW (N); EXCEPT FOR THE DETAIL SHEETS WHERE ITEMS SHOWN ARE NEW UNLESS NOTED EXISTING (E).

6. CONTRACTOR SHALL TAKE ALL PRECAUTIONARY MEASURES TO PROTECT EXISTING PIPELINES AND UTILITIES THAT ARE TO REMAIN IN SERVICE. CONTRACTOR SHALL VERIFY THAT THOSE PIPELINES AND UTILITIES TO BE REMOVED HAVE BEEN DISCONNECTED, SHUT DOWN OR ABANDONED PRIOR TO ATTEMPTING REMOVAL OR DEMOLITION IN A MANNER TO AVOID ANY DISRUPTION OF EXISTING FACILITIES.

7. CONTRACTOR SHALL PROTECT ALL SURFACES & FIXTURES TO REMAIN DURING DEMOLITION AND CONSTRUCTION.

8. ALL DAMAGE DONE TO EXISTING CONSTRUCTION AS A RESULT OF DEMOLITION OR INSTALLATION SHALL BE COMPLETELY REPAIRED BY CONTRACTOR AT OR NO COST TO OWNER. REPAIRED WORK SHALL MATCH EXISTING CONSTRUCTION.

9. CONTRACTOR SHALL REPAIR AND PATCH UP ALL DAMAGES TO EXISTING SURFACES CAUSED BY REMOVAL OF EXISTING EQUIPMENT ATTACHED TO EXISTING SURFACES. (CHALKBOARDS, BOOKSHELVES, TACKBOARDS, WALL HEATERS, PIPING, ETC.)

10. WHERE PATCHES ARE REQUIRED IN EXISTING, SURFACES ADJACENT MATERIAL SHALL BE MATCHED IN TEXTURE AND FINISH.

11. "DEMOLISH" AND "REMOVE" SHALL MEAN TO DEMOLISH, REMOVE FROM THE SITE AND DISPOSE OF IN A LEGAL MANNER UNLESS NOTED OTEHRWISE. TERMINATE PIPING BELOW SUBSTRATE FOR PATCHING. ELECTRICAL WIRE DISCONNECT SHALL BE AT THE SOURCE OF POWER.

12. SALVAGED PRODUCTS SAVED FOR OWNER AS A RESULT OF DEMOLITION ACTIVITY AND/OR PRODUCTS STORED FOR USE IN CONSTRUCTION SHALL BE STORED IN A MANNER SUCH THAT NO MATERIALS ARE DAMAGED AND PUBLIC SAFETY IS MAINTAINED.

13. CONTRACTOR SHALL THOROUGHLY CLEAN AND SECURE THE AREA OF CONSTRUCTION AFTER EACH DAY OF WORK. CONTRACTOR SHALL REMOVE AND DISPOSE OF ALL CONSTRUCTION DEBRIS OFF SITE.

14. LOCATIONS OF STRUCTURES, UNDERGROUND PIPELINES AND UTILITIES WERE OBTAINED FROM AVAILABLE RECORDS. THE CONTRACTOR SHALL FIELD VERIFY THE LOCATIONS AND ELEVATIONS OF ALL PIPELINES AND UTILITIES BEFORE COMMENCING DEMOLITON, EARTHWORK OR CONSTRUCTION WORK.

15. GENERAL CONTRACTOR SHALL VERIFY ALL SITE CONDITIONS PRIOR TO START OF CONSTRUCTION. ALL QUESTIONS SHALL BE SENT TO ARCHITECT.

16. ALL SALVAGEABLE MATERIALS AND EQUIPMENT TO BE REMOVED SHALL REMAIN THE SOLE PROPERTY OF THE OWNER. THE CONTRACTOR SHALL CONSULT WITH THE OWNER CONCERNING STORAGE AND/OR DISPOSAL OF SUCH EQUIPMENT. OWNER HAS FULL SALVAGE RIGHTS. ALL REMOVED MATERIALS OTHER THAN ITEMS TO BE SALVAGED, OR REUSED SHALL BECOME CONTRACTOR'S PROPERTY AND SHALL BE REMOVED FROM THE PROJECT SITE.

17. ALL WORK, INCLUDING REMOVAL OF EXISTING WORK, SHALL BE PERFORMED IN A MANNER THAT MINIMIZES THE AMOUNT OF NOISE, DUST, TRAFFIC AND/OR OTHER FORMS OF DISTURBANCES IN COMPLIANCE WITH ALL APPLICABLE CODES AND ORDINANCES SO THAT THE PUBLIC, STUDENTS AND STAFF, AS WELL AS OTHER OCCUPIED AREAS OF THE SCHOOL ARE SUBJECTED TO AS LITTLE DISRUPTION AS REASONABLY POSSIBLE.

18. ROUTES OF INGRESS AND EGRESS FOR MATERIALS AND WORKMEN, AND LIMITS OF THE PROJECT AREA WILL BE DESIGNATED BY THE OWNER. THE CONTRACTOR SHALL CONFINE HIS ACTIVITES WITHIN SUCH LIMITS. THE CONTRACTOR SHALL INSTALL AND MAINTAIN ADEQUATE SAFETY AND DUST BARRIERS IN THE SITE, ACROSS CORRIDORS AND ELSEWHERE AS REQUIRED.

19. SHUT DOWN OF EXISTING AND OPERATING PLUMBING, MECHANICAL AND ELECTRICAL SYSTEMS OR PORTIONS THEREOF SHALL BE COORDINATED IN ADVANCE WITH THE OWNER.

20. CONTRACTOR SHALL COORDINATE ALL WORK SHOWN ON THE ARCHITECTURAL DRAWINGS WITH THE SPECIFICATIONS AND THE WORK SHOWN ON THE MECHANICAL, PLUMBING, AND ELECTRICAL DRAWINGS. ANY DISCREPANCIES FOUND SHALL BE BROUGHT TO THE ATTENTION OF THE ARCHITECT IN WRITIING BEFORE PROCEEDING WITH ANY RELATED WORK.

21. CONTRACTOR SHALL BE RESPONSIBLE FOR THE FIRE RATING CONTINUITY OF STRUCTURE, WALLS, FLOOR AND CEILINGS INTERRUPTED BY THE WORK OF ALL TRADES. THIS INCLUDES, BUT IS NOT LIMITED TO, FIRE RATED ENCLOSURES AT THE CEILING AND WALLS OF CORRIDORS AND STORAGE ROOMS, AND DUCT SHAFTS.

22. PROVIDE ALL NECESSARY BLOCKING, BACKING AND FRAMING FOR LIGHT FIXTURES, ELECTRICAL UNITS, A/C EQUIPMENT, TOILET FIXTURES & ACCESSORIES, RAILINGS, GRAB BARS, AND ALL OTHERS REQUIRING SAME.

23. CEILING HEIGHT DIMENSIONS ARE FROM FINISH FLOOR TO FINISH FACE OF CEILING.

24. WHERE NEW WALLS ALIGNS WITH EXISTING WALL, PROVIDE SMOOTH INVISIBLE TRANSITION BETWEEN NEW AND EXISTING.

25. NEW GYPSUM BOARD FINISH SHALL BE 5/8" TYPE 'X' OR AS REQUIRED FOR UL FIRE-RATING AS INDICATED ON DRAWINGS.

26. GENERAL CONTRACTOR SHALL PROVIDE TEMPORARY EIGHT (8) FEET HIGH CHAIN LINK FENCE BARRICADES AT WORK AREAS, DISTRICT APPROVED STORAGE AREAS AND WHEREVER NECESSARY TO MAINTAIN A SAFE PASSAGE AND SAFE ENVIRONMENT.

GENERAL NOTES

27. BEFORE PROCEEDING WITH THE CORING OR CUTTING OF WALLS AND FLOORS, ETC., THE CONTRACTOR SHALL PREPARE LAYOUT OF CUTTING OR CORING AND SHALL HAVE THE APPROVAL BY THE STRUCTURAL ENGINEER AND THE D.S.A. FIELD DISTRICT ENGINEER IN ORDER TO PROCEED WITH THE CUTTING OR CORING.

28. SAW-CUT EXISTING A.C. PAVING AND/OR CONCRETE FLOOR SLAB AS REQUIRED FOR NEW PIPE INSTALLATION AND NEW DEPRESSED CONCRETE SLAB, AND REPAIR TO MATCH EXISTING.

29. STRENGTH OF CONCRETE:
   A) SLABS ON EARTH, SIDEWALKS AND CURBS: 3,000 PSI AT 28 DAYS
   B) FOUNTATIONS: 3,000 PSI AT 28 DAYS
   C) FILL ON METAL DECK (LIGHTWEIGHT): 3,000 PSI AT 28 DAYS

30. THE CONTRACTOR SHALL NOT COMMENCE THE WORK, IN PART OR IN FULL, PRIOR TO OBTAINING THE NOTICE-TO-PROCEED (NTP) FROM LAUSD.

31. IN CASE OF CONFLICT, THE MORE EXPENSIVE CONSTRUCTION MEANS AND METHOD SHALL BE USED.

32. THE PROVISIONS OF CFC CHAPTER 14 AND CBC CHAPTER 33 SHALL BE ENFORCED ON THIS PROJECT.

DSA GENERAL NOTES

1. THE INTENT OF THESE DRAWINGS AND SPECIFICATIONS IS THAT THE WORK OF THE ALTERATION, REHABILITATION OR RECONSTRUCTION IS TO BE IN ACCORDANCE WITH TITLE 24, CALIFORNIA CODE OF REGULATIONS. SHOULD ANY EXISTING CONDITIONS SUCH AS DETERIORATION OR NON-COMPLYING CONSTRUCTION BE DISCOVERED WHICH IS NOT COVERED BY THE CONTRACT DOCUMENTS WHEREIN THE FINISHED WORK WILL NOT COMPLY WITH TITLE 24, CALIFORNIA CODE OF REGULATIONS, A CONSTRUCTION CHANGE DOCUMENT (CCD), OR A SEPARATE SET OF PLANS AND SPECIFICATIONS, DETAILING AND SPECIFYING THE REQUIRED WORK SHALL BE SUBMITTED TO AND APPROVED BY THE DIVISION OF THE STATE ARCHITECT BEFORE PROCEEDING WITH THE WORK. (SECTION 4-317 (c), PART 1, TITLE 24, CCR)

   REFERENCE: SECTION 4-317 (C), CALIFORNIA BUILDING STANDARDS ADMINISTRATIVE CODE (PART 1, TITLE 24, CCR)

2. A 'DSA CERTIFIED' PROJECT INSPECTOR WITH CLASS 3 CERTIFICATION IS REQUIRED FOR THIS PROJECT.

3. A DSA ACCEPTED TESTING LABORATORY DIRECTLY EMPLOYED BY THE SCHOOL BOARD SHALL CONDUCT ALL THE REQUIRED TESTS AND INSPECTIONS FOR THE PROJECT.

4. GRADING PLANS, DRAINAGE IMPROVEMENTS, ROAD AND ACCESS REQUIREMENTS AND ENVIRONMENTAL HEALTH CONSIDERATIONS SHALL COMPLY WITH ALL LOCAL ORDINANCES.

5. ALL WORK SHALL CONFORM TO 2013 EDITION TITLE 24, CALIFORNIA CODE OF REGULATIONS (CCR).

6. CHANGES TO THE APPROVED DRAWINGS AND SPECIFICATIONS SHALL BE MADE BY ADDENDA OR CONSTRUCTION CHANGE DOCUMENT (CCD) APPROVED BY THE DIVISION OF THE STATE ARCHITECT, AS REQUIRED BY SECTION 4-338, PART 1, TITLE 24, CCR.

7. A 'DSA CERTIFIED' PROJECT INSPECTOR EMPLOYED BY THE DISTRICT (OWNER) AND APPROVED BY THE DIVISION OF STATE ARCHITECT SHALL PROVIDE CONTINUOUS INSPECTION OF THE WORK. THE DUTIES OF THE INSPECTOR ARE DEFINED IN SECTION 4-342, CALIFORNIA BUILDING STANDARDS ADMINISTRATIVE CODE (PART 1, TITLE 24, CCR).

APPLICABLE CODES

LIST OF 2013 CALIFORNIA CODE OF REGULATIONS (C.C.R.): APPLICABLE CODE AS OF JANUARY 1, 2014

PART 1-	2013 CALIFORNIA BUILDING STANDARD ADMINISTRATIVE CODE, TITLE 24 C.C.R.
PART 2-	2013 CALIFORNIA BUILDING CODE, TITLE 24 C.C.R. (2012 INTERNATIONAL BUILDING CODE OF THE INTERNATIONAL CODE COUNCIL, WITH CALIFORNIA AMENDMENTS)
PART 3-	2013 CALIFORNIA ELECTRICAL CODE, TITLE 24 C.C.R. (2011 NATIONAL ELECTRICAL CODE OF THE NATIONAL FIRE PROTECTION ASSOCIATION, NFPA)
PART 4-	2013 CALIFORNIA MECHANICAL CODE, TITLE 24 C.C.R. (2012 UNIFORM MECHANICAL CODE OF THE INTERNATIONAL ASSOCIATION OF PLUMBING AND MECHANICAL OFFICIALS, IAPMO)
PART 5-	2013 CALIFORNIA PLUMBING CODE, TITLE 24 C.C.R. (2012 UNIFORM PLUMBING CODE OF THE INTERNATIONAL ASSOCIATION OF PLUMBING AND MECHANICAL OFFICIALS, IAPMO)
PART 6-	2013 CALIFORNIA ENERGY CODE, TITLE 24 C.C.R.
PART 7-	CURRENTLY VACANT
PART 8-	2013 CALIFORNIA HISTORICAL BUILDINGS CODE, TITLE 24 C.C.R.
PART 9-	2013 CALIFORNIA FIRE CODE, TITLE 24 C.C.R. (2012 INTERNATIONAL FIRE CODE OF THE INTERNATIONAL CODE COUNCIL)
PART 10-	2013 CALIFORNIA EXISTING BUILDING CODE (2012 INTERNATIONAL EXISTING BUILDING CODE OF THE INTERNATIONAL CODE COUNCIL, WITH AMENDMENTS)
PART 11-	2013 CALIFORNIA GREEN BUILDING STANDARDS CODE (CALGREEN CODE), TITLE 24 C.C.R.
PART 12-	2013 CALIFORNIA REFERENCE STANDARDS CODE, TITLE 24 C.C.R.

PARTIAL LIST OF APPLICABLE STANDARDS

2013 CALIFORNIA BUILDING CODE (FOR SFM) REFERENCED STANDARDS CHAP. 35

NFPA 13	AUTOMATIC SPRINKLER SYSTEMS (CALIFORNIA AMENDED)	2013 EDITION
NFPA 14	STANDPIPE SYSTEMS (CALIFORNIA AMENDED)	2013 EDITION
NFPA 17	DRY CHEMICAL EXTINGUISHING SYSTEMS	2013 EDITION
NFPA 17a	WET CHEMICAL EXTINGUISHING SYSTEMS	2013 EDITION
NFPA 20	STATIONARY PUMPS	2013 EDITION
NFPA 24	PRIVATE FIRE SERVICE MAINS (CALIFORNIA AMENDED)	2013 EDITION
NFPA 72	NATIONAL FIRE ALARM CODE (CALIFORNIA AMENDED) (NOTE: SEE UL STANDARD 1971 FOR "VISUAL DEVICES")	2013 EDITION
NFPA 80	FIRE DOOR AND OTHER OPENING PROTECTIVES	2013 EDITION
NFPA 253	CRITICAL RADIANT FLUX OF FLOOR COVERING SYSTEMS	2006 EDITION
NFPA 2001	CLEAN AGENT FIRE EXTINGUISHING SYSTEMS	2012 EDITION

DEPARTMENT OF JUSTICE REGULATIONS FOR TITLE II OF THE AMERICANS WITH DISABILITIES ACT OF 1990 WITH REVISED REGULATIONS AS PUBLISHED IN THE FEDERAL REGISTER ON SEPTEMBER 15, 2010, EFFECTIVE MARCH 15, 2012. TITLED ADA STANDARDS FOR ACCESSIBLE DESIGN.

OWNER

VENTURA COUNTY COMMUNITY COLLEGE DISTRICT
255 W. STANLEY AVE., SUITE 150
VENTURA, CALIFORNIA 93001
(805) 652-5500

DESIGN TEAM

PLUMBING, MECHANICAL & ELECTRICAL
J & S CONSULTING ENGINEERS, INC.
3111 WINONA AVE, SUITE 102
BURBANK, CALIFORNIA 91504
(818) 841-0303

ARCHITECT
AMADOR WHITTLE ARCHITECTS
28328 AGOURA ROAD, #203
AGOURA HILLS, CALIFORNIA 93021
(805) 530-3938

STRUCTURAL
ORION STRUCTURAL GROUP, INC.
223 E. THOUSAND OAKS BLVD, SUITE 220
THOUSAND OAKS, CALIFORNIA 91360
(805) 750-8136

LICENSED ARCHITECT
LEAH ANN AMADOR
C-22205
APRIL 30, 2019
RENEWAL DATE
STATE OF CALIFORNIA

VICINITY MAP

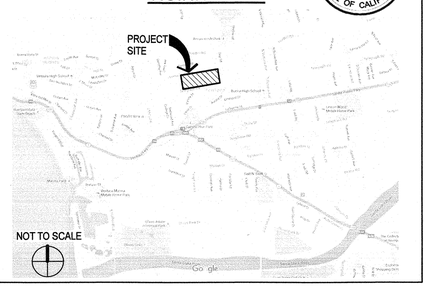

J & S CONSULTING ENGINEERS, INC.
ELECTRICAL ◦ MECHANICAL
FIRE PROTECTION
3111 Winona Ave., #102
Burbank, Ca 91504
Tel.: (818) 841-0303
Fax: (818) 841-8531
624 Moorpark Road,
Moorpark, CA 93021
Tel.: (805) 523-1700
Fax: (805) 523-1702
www.jandsconsulting.com
E-Mail:jsmail@jandsconsulting.com
PROJECT No. 45461

AMADOR WHITTLE
ARCHITECTS, INC.
28328 AGOURA ROAD, SUITE 203
AGOURA HILLS, CA 91301
(805) 530-3938 , (818) 874-0071

VENTURA COLLEGE

4667 TELEGRAPH ROAD, VENTURA, CALIFORNIA, 93003
VENTURA COUNTY COMMUNITY COLLEGE DISTRICT

MATH & SCIENCE COMPLEX

IDENTIFICATION STAMP
DIVISION OF THE STATE ARCHITECT
APPL. NO. 03-117754
AC ___ FLS ___ SS ___
DATE JUL 05 2017

NO.	DATE	DESCRIPTION	BY
	12.19.16	DSA SUBMITTAL	

REVISIONS

DRAWN BY:	MJQ
CHECKED BY:	JAA
DATE	05.12.17
JOB NO:	14-JS VCCCD

SHEET TITLE

GENERAL NOTES & VICINITY MAP

SHEET

A0.00

DWG# 2 OF 82

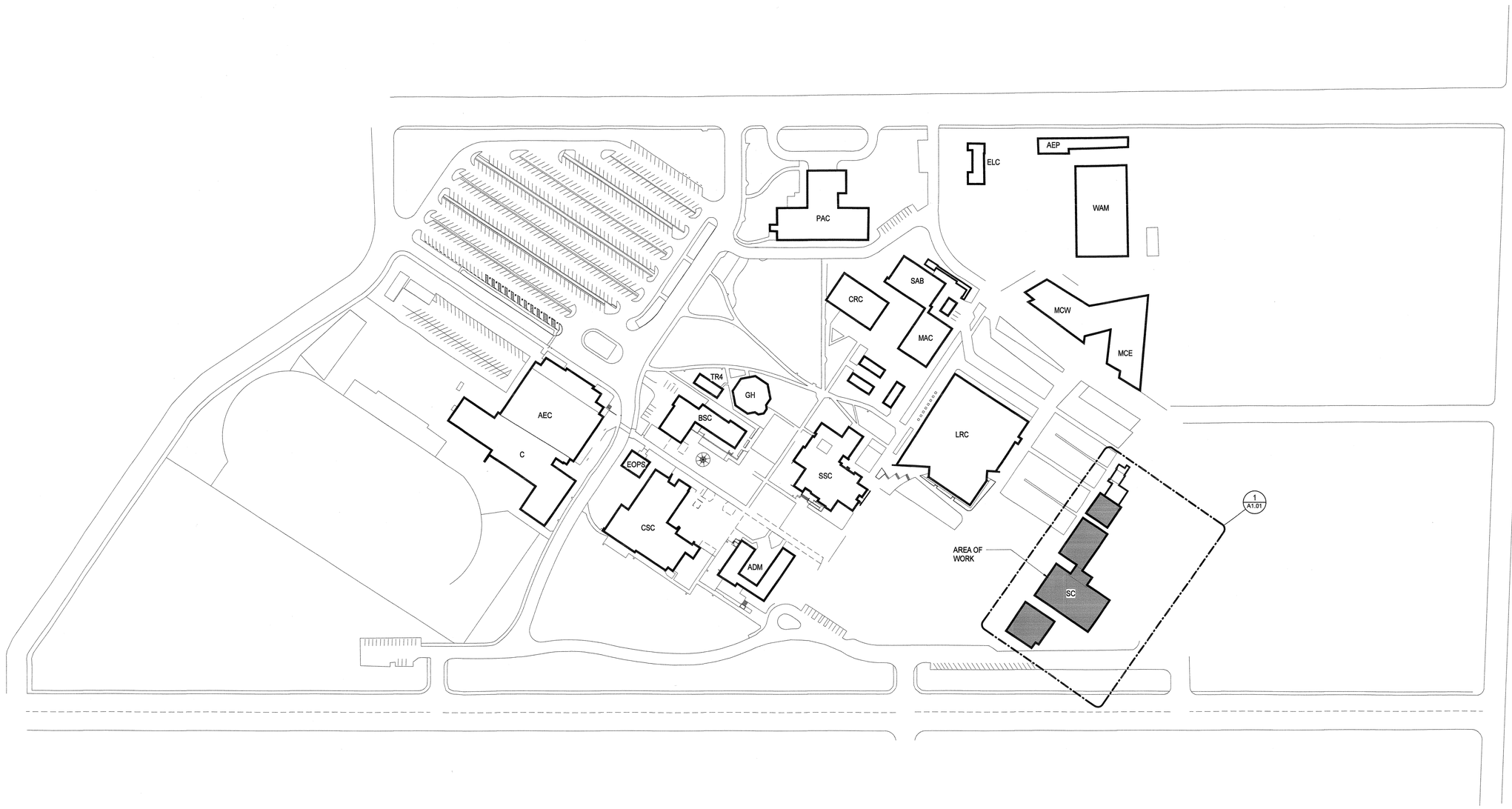

1 CAMPUS SITE PLAN
1" = 100'-0"

LEGEND

ADM-	ADMINISTRATION	A#15677; 27140
AEC-	ATHLETIC EVENT CENTER	A#
AEP-	AUTO EDUCATION PROGRAM	-
ASC-	APPLIED SCIENCE CENTER	-
BCS-	BOOKSTORE & CAMPUS SERVICES	-
C-	KINESIOLOGY	-
CDC-	CHILD DEVELOPMENT CENTER	-
CRC-	CREATIVE RESOURCES CENTER	A#23750
CSC-	CAMPUS STUDENT CENTER	A#10764; 26943
DRC-	DAY ROAD CENTER	-
ECT-	ENVIRONMENTAL/CONSTRUCTION TECHNOLOGY	-
ELC-	ENGLISH LEARNING CENTER	-
EOP-	EOPS	A#39845
GH-	GUTHRIE HALL	A#51118
HSC-	HEALTH SCIENCE CENTER	-
HH-	HEAD HOUSE	-
LRC-	LEARNING RESOURCE CENTER	A#104598
M-	CERAMICS & SCULPTURE	-
MAC-	MEDIA ARTS CENTER	A#27982; 36633
M&O-	MAINTENANCE & OPERATIONS	-
MCE-	MULTIDISCIPLINARY CENTER EAST	-
MCW-	MULTIDISCIPLINARY CENTER WEST	-
NMG-	NEW MEDIA GALLERY	-
PAC-	PERFORMING ARTS CENTER	A#23750; 44935; 45630
SAB-	STUDIO ARTS BUILDING	A#11482
SC-	SCIENCES & MATHEMATICS	A#60113
SSC-	STUDENT SERVICES CENTER	A#10623
S&R-	SHIPPING & RECEIVING/WAREHOUSE	-
TR 4-	CLASSROOM	-
TR12-15-	TRAILER CLASSROOMS	-
TR 16-	NURSING SKILLS LAB	-
VCS-	VENTURA COLLEGE SPORTSPLEX	-
VCPD-	VENTURA COLLEGE CAMPUS POLICE	A#
WAM-	WELDING/AUTO/MANUFACTURING	A#
WEC-	WRIGHT EVENT CNETER	A#

LICENSED ARCHITECT MARY ANN AMADOR C-22205 APRIL 30, 2019 RENEWAL DATE STATE OF CALIFORNIA

J & S CONSULTING ENGINEERS, INC.
ELECTRICAL ◦ MECHANICAL
FIRE PROTECTION
3111 Winona Ave., #102
Burbank, Ca 91504
Tel.: (818) 841-0303
Fax: (818) 841-8531
624 Moorpark Road,
Moorpark, CA 93021
Tel.: (805) 523-1700
Fax: (805) 523-1702
www.jandsconsulting.com
E-Mail:jsmail@jandsconsulting.com
PROJECT No. 45461

AMADOR WHITTLE
ARCHITECTS, INC.
28328 AGOURA ROAD, SUITE 203
AGOURA HILLS, CA 91301
(805) 530-3938 , (818) 874-0071

VENTURA COLLEGE
4667 TELEGRAPH ROAD, VENTURA, CALIFORNIA, 93003
VENTURA COUNTY COMMUNITY COLLEGE DISTRICT
MATH & SCIENCE COMPLEX

IDENTIFICATION STAMP
DIVISION OF THE STATE ARCHITECT
APPL. NO. 03-117754
AC ✓ FLS ✓ SS
DATE JUL 05 2017

NO.	DATE	DESCRIPTION	BY
	12.19.16	DSA SUBMITTAL	

REVISIONS

DRAWN BY:	MJQ
CHECKED BY:	MJQ
DATE	05.12.17
JOB NO:	14-JS VCCCD

SHEET TITLE
CAMPUS SITE PLAN

SHEET
A1.00
DWG # 3 OF 21

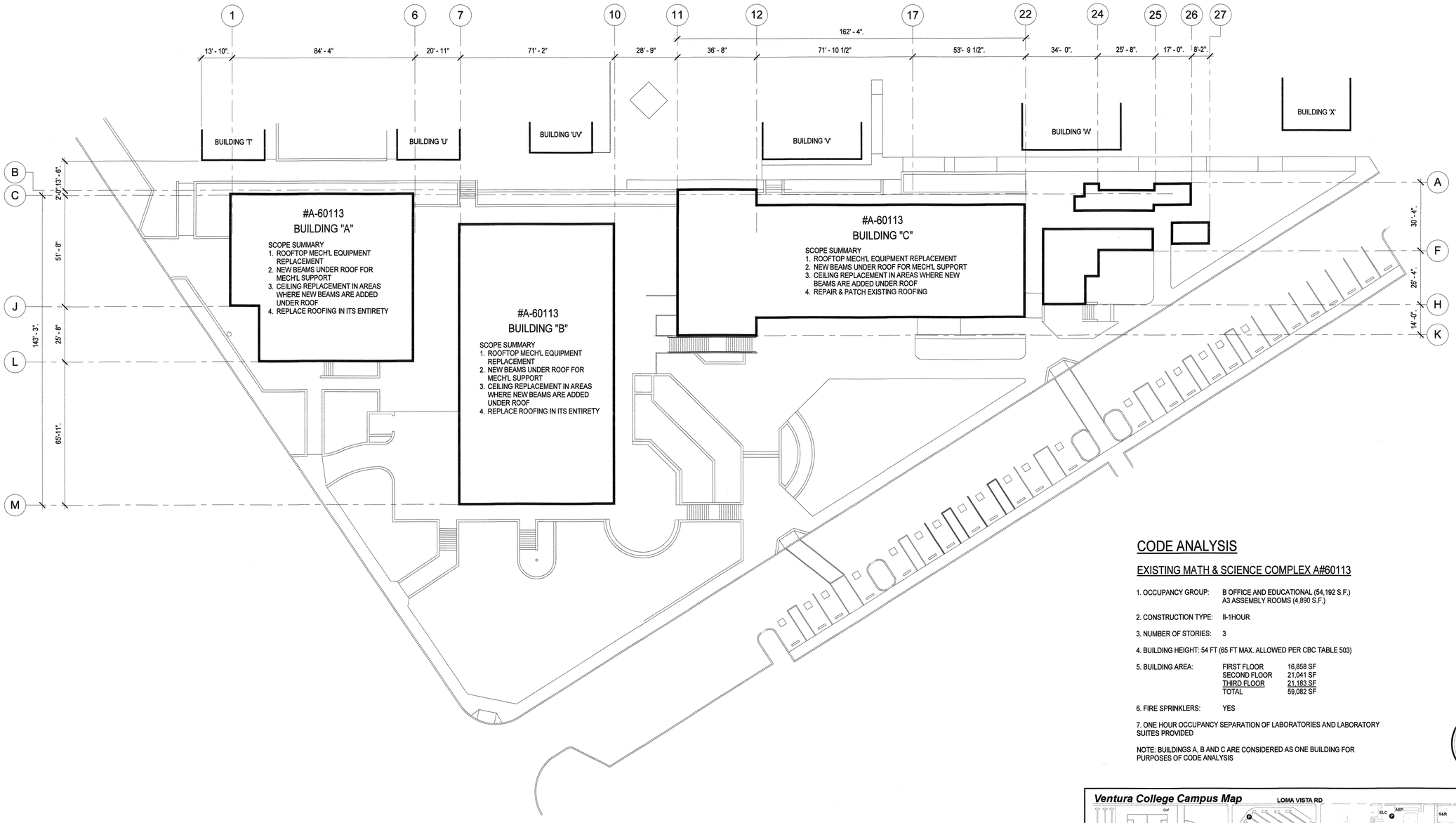

1 SITE PLAN
1" = 20'-0"

CODE ANALYSIS

EXISTING MATH & SCIENCE COMPLEX A#60113

1. OCCUPANCY GROUP: B OFFICE AND EDUCATIONAL (54,192 S.F.)
   A3 ASSEMBLY ROOMS (4,890 S.F.)
2. CONSTRUCTION TYPE: II-1HOUR
3. NUMBER OF STORIES: 3
4. BUILDING HEIGHT: 54 FT (65 FT MAX. ALLOWED PER CBC TABLE 503)
5. BUILDING AREA:

FIRST FLOOR	16,858 SF
SECOND FLOOR	21,041 SF
THIRD FLOOR	21,183 SF
TOTAL	59,082 SF

6. FIRE SPRINKLERS: YES
7. ONE HOUR OCCUPANCY SEPARATION OF LABORATORIES AND LABORATORY SUITES PROVIDED

NOTE: BUILDINGS A, B AND C ARE CONSIDERED AS ONE BUILDING FOR PURPOSES OF CODE ANALYSIS

LICENSED ARCHITECT JEAN ANN AMADOR C-22305 APRIL 30, 2019 RENEWAL DATE STATE OF CALIFORNIA

Ventura College Campus Map — LOMA VISTA RD — 6.1.12

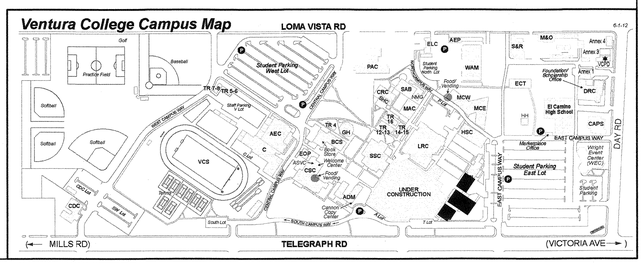

J & S CONSULTING ENGINEERS, INC.
ELECTRICAL ▫ MECHANICAL
FIRE PROTECTION
3111 Winona Ave., #102
Burbank, Ca 91504
Tel.: (818) 841-0303
Fax: (818) 841-8531
624 Moorpark Road,
Moorpark, CA 93021
Tel.: (805) 523-1700
Fax: (805) 523-1702
www.jandsconsulting.com
E-Mail:jsmail@jandsconsulting.com
PROJECT No. 45461

AMADOR WHITTLE
ARCHITECTS, INC.
28328 AGOURA ROAD, SUITE 203
AGOURA HILLS, CA 91301
(805) 530-3938 , (818) 874-0071

VENTURA COLLEGE

4667 TELEGRAPH ROAD, VENTURA, CALIFORNIA, 93003
VENTURA COUNTY COMMUNITY COLLEGE DISTRICT

MATH & SCIENCE COMPLEX

IDENTIFICATION STAMP
DIVISION OF THE STATE ARCHITECT
APPL. NO. 03-117754
AC — FLS — SS
DATE MAY 05 2017

NO.	DATE	DESCRIPTION	BY
		REVISIONS	
	12.19.16	DSA SUBMITTAL	

DRAWN BY:	MJQ
CHECKED BY:	JAA
DATE	05.12.17
JOB NO:	14-JS VCCCD

SHEET TITLE

SITE PLAN & SCOPE SUMMARY

SHEET

A1.01

DWG # 4 OF 81

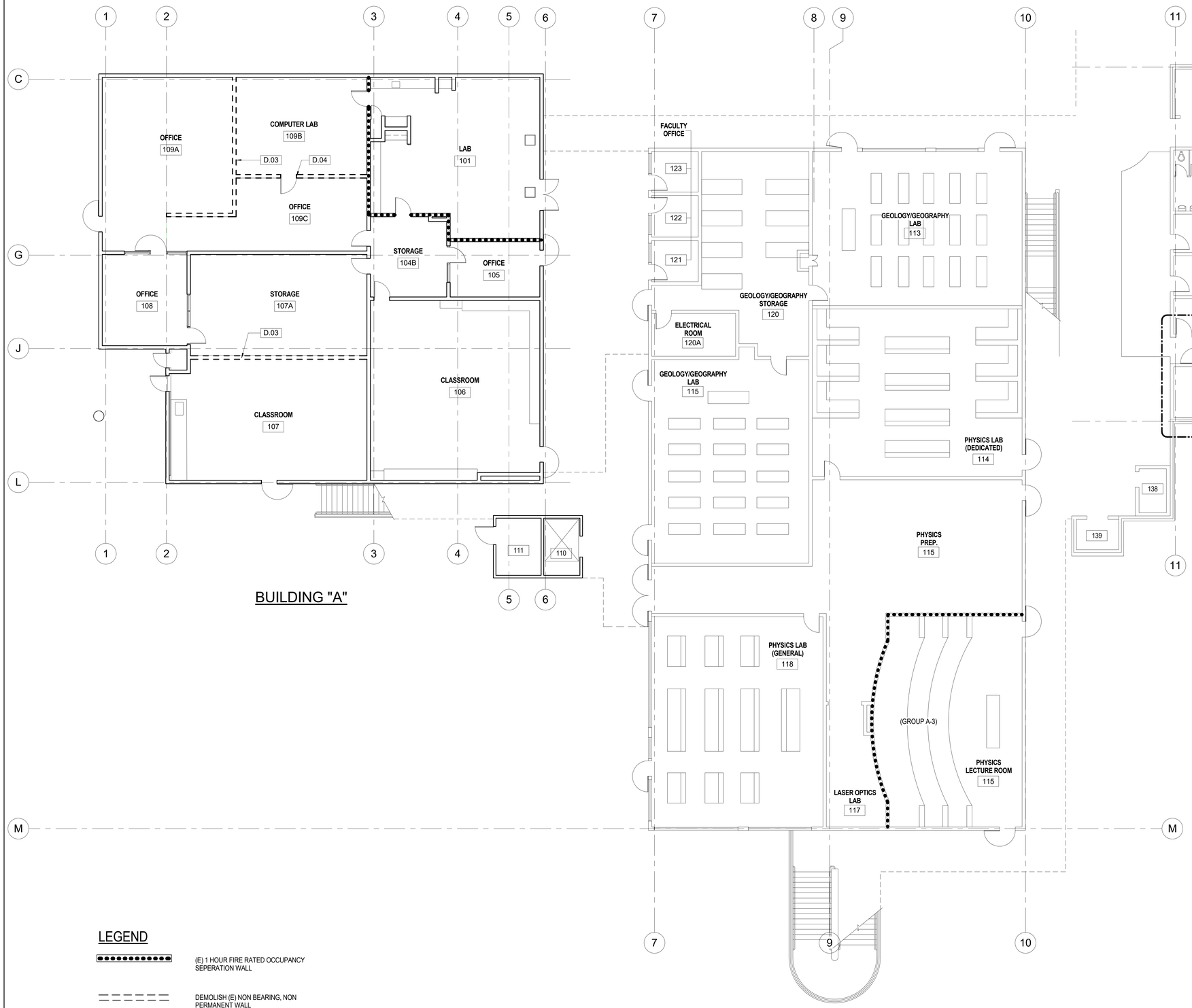

DEMOLITION KEYNOTES

D.03 DEMOLISH (E) NON-BEARING, NON PERMANENT WALL PARTITION

D.04 DEMOLISH (E) DOOR, FRAME AND HARDWARE

GENERAL NOTES

1. ALL ITEMS SHOWN HERE ARE EXISTING TO REMAIN UNLESS NOTED OTHERWISE.
2. FOR NEW PIPE PENETRATIONS THRU 1-HR RATED FLOOR AND WALLS, SEE DETAILS 12/A5.01 AND 16/A5.01.
4. MAINTAIN THE FIRE RATING CONTINUITY OF STRUCTURE, WALLS, FLOOR AND CEILINGS INTERRUPTED BY THE WORK OF ALL TRADES.

LEGEND

(E) 1 HOUR FIRE RATED OCCUPANCY SEPERATION WALL

DEMOLISH (E) NON BEARING, NON PERMANENT WALL

NORTH

0' 4' 8' 16' 32'

A1.04
A1.03
A1.02
KEY PLAN

1 FIRST FLOOR PLAN
1/8" = 1'-0"

J & S CONSULTING ENGINEERS, INC.
ELECTRICAL ▫ MECHANICAL
FIRE PROTECTION
3111 Winona Ave., #102
Burbank, Ca 91504
Tel.: (818) 841-0303
Fax: (818) 841-8531
624 Moorpark Road,
Moorpark, CA 93021
Tel.: (805) 523-1700
Fax: (805) 523-1702
www.jandsconsulting.com
E-Mail:jsmail@jandsconsulting.com

PROJECT No. 45461

AMADOR WHITTLE
ARCHITECTS, INC.
28328 AGOURA ROAD, SUITE 203
AGOURA HILLS, CA 91301
(805) 530-3938 , (818) 874-0071

VENTURA COLLEGE

4667 TELEGRAPH ROAD, VENTURA, CALIFORNIA, 93003
VENTURA COUNTY COMMUNITY COLLEGE DISTRICT

MATH & SCIENCE COMPLEX

IDENTIFICATION STAMP
DIVISION OF THE STATE ARCHITECT
APPL. NO. 03-117754
AC _____ FLS _____ SS _____
DATE _____

NO.	DATE	DESCRIPTION	BY
1	08.28.18	ROOM NUMBER CHANGES	
	12.19.16	DSA SUBMITTAL	

REVISIONS

LICENSED ARCHITECT JEAN ANN WHITTLE C-22205 APPRL 30, 2019 RENEWAL DATE STATE OF CALIFORNIA

DRAWN BY:	TJL
CHECKED BY:	MJQ
DATE	05.12.17
JOB NO:	14-JS VCCCD

SHEET TITLE

FIRST FLOOR PLAN

SHEET

A1.02

DWG # ____ OF ____

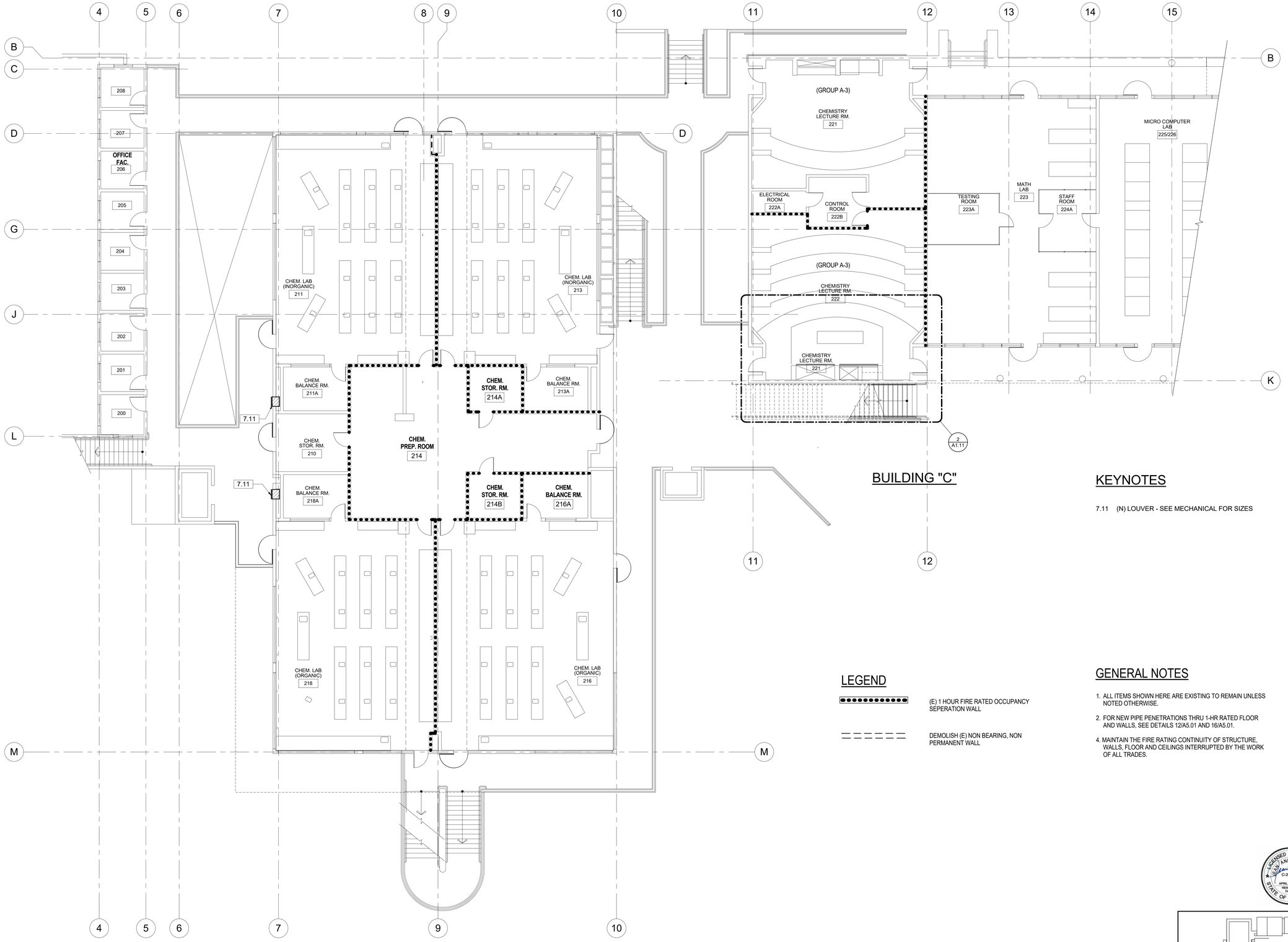

BUILDING "C"

BUILDING "B"

KEYNOTES

7.11 (N) LOUVER - SEE MECHANICAL FOR SIZES

LEGEND

(E) 1 HOUR FIRE RATED OCCUPANCY SEPERATION WALL

DEMOLISH (E) NON BEARING, NON PERMANENT WALL

GENERAL NOTES

1. ALL ITEMS SHOWN HERE ARE EXISTING TO REMAIN UNLESS NOTED OTHERWISE.
2. FOR NEW PIPE PENETRATIONS THRU 1-HR RATED FLOOR AND WALLS, SEE DETAILS 12/A5.01 AND 16/A5.01.
4. MAINTAIN THE FIRE RATING CONTINUITY OF STRUCTURE, WALLS, FLOOR AND CEILINGS INTERRUPTED BY THE WORK OF ALL TRADES.

NORTH

0' 4' 8' 16' 32'

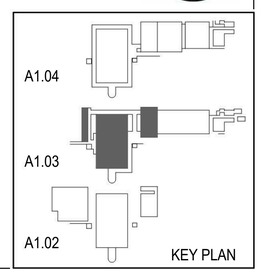

KEY PLAN

1 PARTIAL SECOND FLOOR PLAN
1/8" = 1'-0"

J & S CONSULTING ENGINEERS, INC.
ELECTRICAL • MECHANICAL
FIRE PROTECTION
3111 Winona Ave., #102
Burbank, Ca 91504
Tel.: (818) 841-0303
Fax: (818) 841-8531
624 Moorpark Road,
Moorpark, CA 93021
Tel.: (805) 523-1700
Fax: (805) 523-1702
www.jandsconsulting.com
E-Mail:jsmail@jandsconsulting.com
PROJECT No. 45461

AMADOR WHITTLE
ARCHITECTS, INC.
28328 AGOURA ROAD, SUITE 203
AGOURA HILLS, CA 91301
(805) 530-3938 , (818) 874-0071

VENTURA COLLEGE

4667 TELEGRAPH ROAD, VENTURA, CALIFORNIA, 93003
VENTURA COUNTY COMMUNITY COLLEGE DISTRICT
MATH & SCIENCE COMPLEX

IDENTIFICATION STAMP
DIVISION OF THE STATE ARCHITECT
APPL. NO. 03-117754
AC _____ FLS _____ SS _____
DATE _____

NO.	DATE	DESCRIPTION	BY
1	08.28.18	ROOM NUMBER CHANGES	
	12.19.16	DSA SUBMITTAL	

REVISIONS

DRAWN BY:	TJL
CHECKED BY:	MJQ
DATE	05.12.17
JOB NO:	14-JS VCCCD

SHEET TITLE

PARTIAL SECOND FLOOR PLAN

SHEET

A1.03

DWG # ____ OF ____

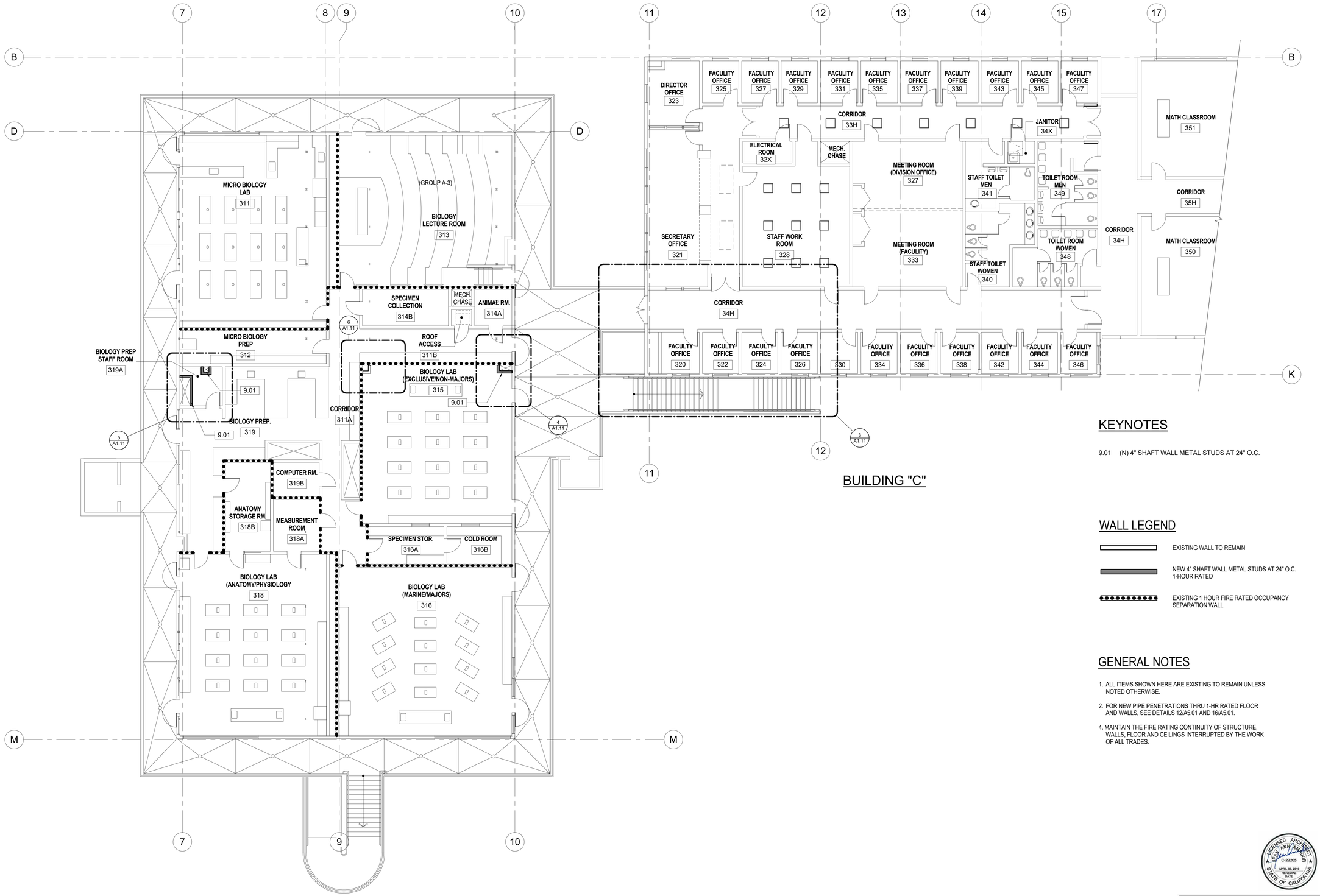

BUILDING "C"

BUILDING "B"

1 PARTIAL THIRD FLOOR PLAN
1/8" = 1'-0"

KEYNOTES

9.01 (N) 4" SHAFT WALL METAL STUDS AT 24" O.C.

WALL LEGEND

- EXISTING WALL TO REMAIN
- NEW 4" SHAFT WALL METAL STUDS AT 24" O.C. 1-HOUR RATED
- EXISTING 1 HOUR FIRE RATED OCCUPANCY SEPARATION WALL

GENERAL NOTES

1. ALL ITEMS SHOWN HERE ARE EXISTING TO REMAIN UNLESS NOTED OTHERWISE.
2. FOR NEW PIPE PENETRATIONS THRU 1-HR RATED FLOOR AND WALLS, SEE DETAILS 12/A5.01 AND 16/A5.01.
4. MAINTAIN THE FIRE RATING CONTINUITY OF STRUCTURE, WALLS, FLOOR AND CEILINGS INTERRUPTED BY THE WORK OF ALL TRADES.

NORTH

0' 4' 8' 16' 32'

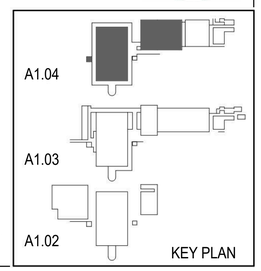

J & S CONSULTING ENGINEERS, INC.
ELECTRICAL ▫ MECHANICAL
FIRE PROTECTION
3111 Winona Ave., #102
Burbank, Ca 91504
Tel.: (818) 841-0303
Fax: (818) 841-8531
624 Moorpark Road,
Moorpark, CA 93021
Tel.: (805) 523-1700
Fax: (805) 523-1702
www.jandsconsulting.com
E-Mail:jsmail@jandsconsulting.com
PROJECT No. 45461

AMADOR WHITTLE
ARCHITECTS, INC.
28328 AGOURA ROAD, SUITE 203
AGOURA HILLS, CA 91301
(805) 530-3938 , (818) 874-0071

VENTURA COLLEGE
4667 TELEGRAPH ROAD, VENTURA, CALIFORNIA, 93003
VENTURA COUNTY COMMUNITY COLLEGE DISTRICT
MATH & SCIENCE COMPLEX

IDENTIFICATION STAMP
DIVISION OF THE STATE ARCHITECT
APPL. NO. 03-117754
AC _____ FLS _____ SS _____
DATE _____

NO.	DATE	DESCRIPTION	BY
1	08.28.18	ROOM NUMBER CHANGES	
	12.19.16	DSA SUBMITTAL	

REVISIONS

LICENSED ARCHITECT JEANNE MARIE AMADOR C-22205 APRIL 30, 2019 RENEWAL DATE STATE OF CALIFORNIA

DRAWN BY:	TJL
CHECKED BY:	MJQ
DATE	05.12.17
JOB NO:	14-JS VCCCD

SHEET TITLE

PARTIAL THIRD FLOOR FLOOR PLAN

SHEET

A1.04

DWG # ____ OF ____

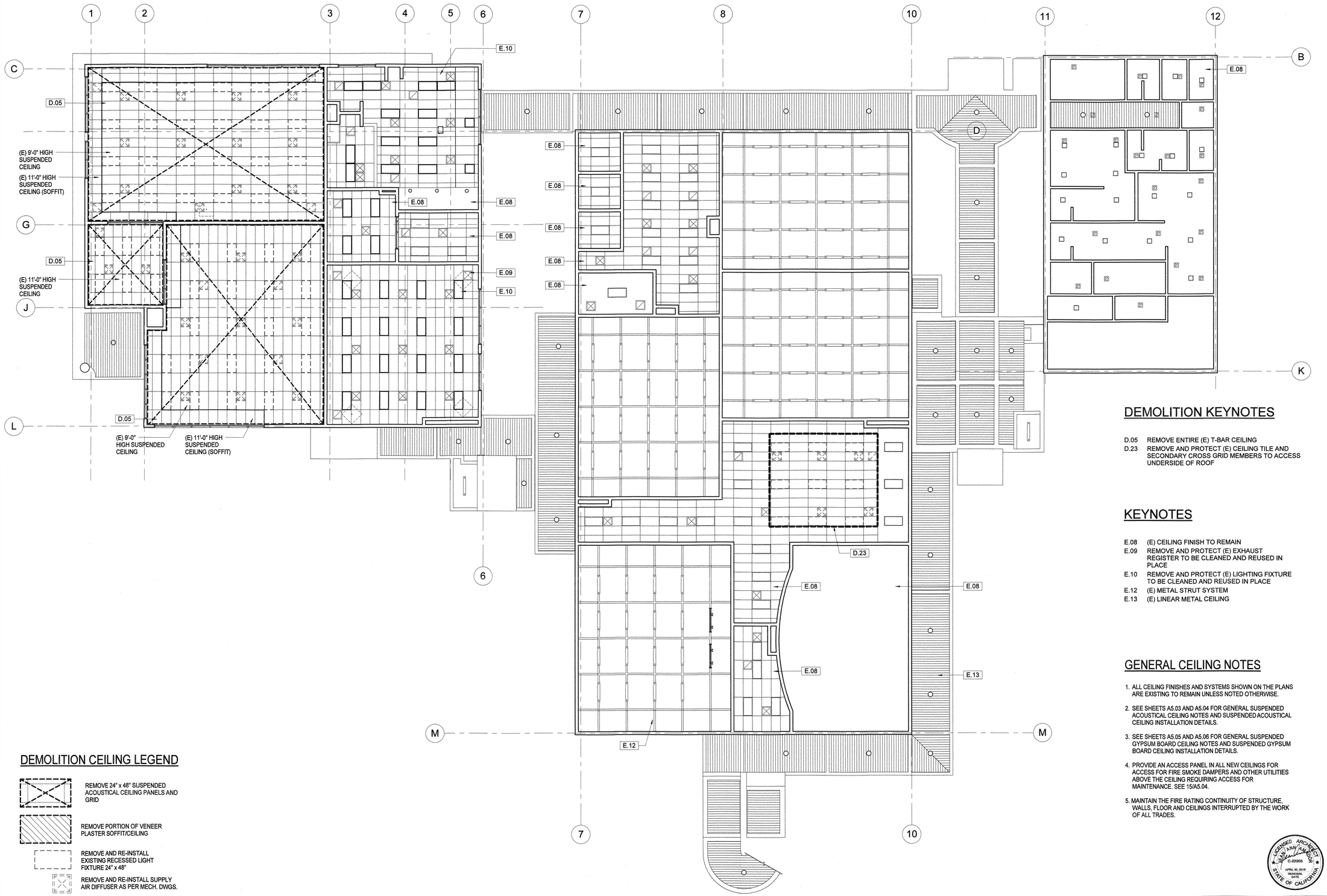

DEMOLITION KEYNOTES

D.05 REMOVE ENTIRE (E) T-BAR CEILING

D.23 REMOVE AND PROTECT (E) CEILING TILE AND SECONDARY CROSS GRID MEMBERS TO ACCESS UNDERSIDE OF ROOF

KEYNOTES

E.08 (E) CEILING FINISH TO REMAIN

E.09 REMOVE AND PROTECT (E) EXHAUST REGISTER TO BE CLEANED AND REUSED IN PLACE

E.10 REMOVE AND PROTECT (E) LIGHTING FIXTURE TO BE CLEANED AND REUSED IN PLACE

E.12 (E) METAL STRUT SYSTEM

E.13 (E) LINEAR METAL CEILING

GENERAL CEILING NOTES

1. ALL CEILING FINISHES AND SYSTEMS SHOWN ON THE PLANS ARE EXISTING TO REMAIN UNLESS NOTED OTHERWISE.
2. SEE SHEETS A5.03 AND A5.04 FOR GENERAL SUSPENDED ACOUSTICAL CEILING NOTES AND SUSPENDED ACOUSTICAL CEILING INSTALLATION DETAILS.
3. SEE SHEETS A5.05 AND A5.06 FOR GENERAL SUSPENDED GYPSUM BOARD CEILING NOTES AND SUSPENDED GYPSUM BOARD CEILING INSTALLATION DETAILS.
4. PROVIDE AN ACCESS PANEL IN ALL NEW CEILINGS FOR ACCESS FOR FIRE SMOKE DAMPERS AND OTHER UTILITIES ABOVE THE CEILING REQUIRING ACCESS FOR MAINTENANCE. SEE 15/A5.04.
5. MAINTAIN THE FIRE RATING CONTINUITY OF STRUCTURE, WALLS, FLOOR AND CEILINGS INTERRUPTED BY THE WORK OF ALL TRADES.

DEMOLITION CEILING LEGEND

REMOVE 24" x 48" SUSPENDED ACOUSTICAL CEILING PANELS AND GRID

REMOVE PORTION OF VENEER PLASTER SOFFIT/CEILING

REMOVE AND RE-INSTALL EXISTING RECESSED LIGHT FIXTURE 24" x 48"

REMOVE AND RE-INSTALL SUPPLY AIR DIFFUSER AS PER MECH. DWGS.

REMOVE AND RE-INSTALL RETURN AIR GRILL AS PER MECH. DWGS.

1 FIRST FLOOR DEMOLITION REFLECTED CEILING PLAN
1/8" = 1'-0"

NORTH

0' 4' 8' 16' 32'

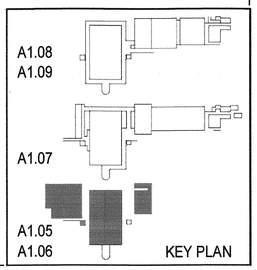

KEY PLAN

J & S CONSULTING ENGINEERS, INC.
ELECTRICAL • MECHANICAL
FIRE PROTECTION
3111 Winona Ave., #102
Burbank, Ca 91504
Tel.: (818) 841-0303
Fax: (818) 841-8531
624 Moorpark Road,
Moorpark, CA 93021
Tel.: (805) 523-1700
Fax: (805) 523-1702
www.jandsconsulting.com
E-Mail:jsmail@jandsconsulting.com
PROJECT No. 45461

AMADOR WHITTLE ARCHITECTS, INC.
28328 AGOURA ROAD, SUITE 203
AGOURA HILLS, CA 91301
(805) 530-3938 , (818) 874-0071

VENTURA COLLEGE

4667 TELEGRAPH ROAD, VENTURA, CALIFORNIA, 93003
VENTURA COUNTY COMMUNITY COLLEGE DISTRICT
MATH & SCIENCE COMPLEX

IDENTIFICATION STAMP
DIVISION OF THE STATE ARCHITECT
APPL. NO. 03-117754
AC ___ FLS ___ SS ___
DATE JUL 05 2017

NO.	DATE	DESCRIPTION	BY
	12.19.16	DSA SUBMITTAL	

REVISIONS

DRAWN BY:	JLT
CHECKED BY:	MJQ
DATE	05.12.17
JOB NO:	14-JS VCCCD

SHEET TITLE
FIRST FLOOR DEMOLITION REFLECTED CEILING PLAN

SHEET
A1.05

DWG # B OF C

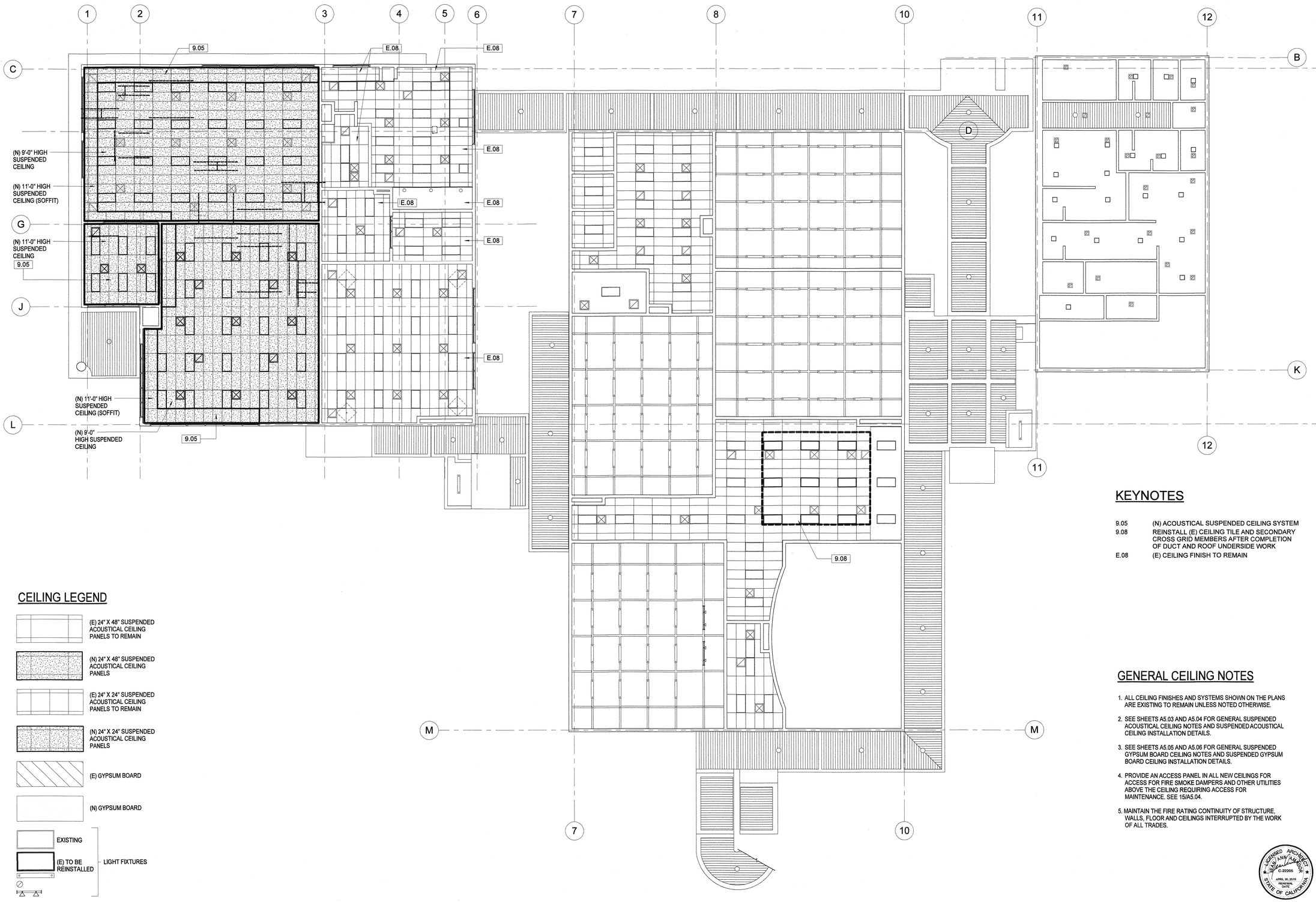

KEYNOTES

9.05	(N) ACOUSTICAL SUSPENDED CEILING SYSTEM
9.08	REINSTALL (E) CEILING TILE AND SECONDARY CROSS GRID MEMBERS AFTER COMPLETION OF DUCT AND ROOF UNDERSIDE WORK
E.08	(E) CEILING FINISH TO REMAIN

CEILING LEGEND

- (E) 24" X 48" SUSPENDED ACOUSTICAL CEILING PANELS TO REMAIN
- (N) 24" X 48" SUSPENDED ACOUSTICAL CEILING PANELS
- (E) 24" X 24" SUSPENDED ACOUSTICAL CEILING PANELS TO REMAIN
- (N) 24" X 24" SUSPENDED ACOUSTICAL CEILING PANELS
- (E) GYPSUM BOARD
- (N) GYPSUM BOARD
- LIGHT FIXTURES
  - EXISTING
  - (E) TO BE REINSTALLED
- VIDEO PROJECTOR
- PROJECTION SCREEN
- T.V. MONITOR BRACKET
- (E) AIR RETURN TO BE REMOVED AND REINSTALLED
- (E) EXHAUST TO BE REMOVED AND REINSTALLED
- (E) AIR SUPPLY TO BE REMOVED AND REINSTALLED
- (N) STRUCTURAL STEEL BEAM UNDERSIDE OF ROOF, SEE STRUCTURAL

GENERAL CEILING NOTES

1. ALL CEILING FINISHES AND SYSTEMS SHOWN ON THE PLANS ARE EXISTING TO REMAIN UNLESS NOTED OTHERWISE.
2. SEE SHEETS A5.03 AND A5.04 FOR GENERAL SUSPENDED ACOUSTICAL CEILING NOTES AND SUSPENDED ACOUSTICAL CEILING INSTALLATION DETAILS.
3. SEE SHEETS A5.05 AND A5.06 FOR GENERAL SUSPENDED GYPSUM BOARD CEILING NOTES AND SUSPENDED GYPSUM BOARD CEILING INSTALLATION DETAILS.
4. PROVIDE AN ACCESS PANEL IN ALL NEW CEILINGS FOR ACCESS FOR FIRE SMOKE DAMPERS AND OTHER UTILITIES ABOVE THE CEILING REQUIRING ACCESS FOR MAINTENANCE. SEE 15/A5.04.
5. MAINTAIN THE FIRE RATING CONTINUITY OF STRUCTURE, WALLS, FLOOR AND CEILINGS INTERRUPTED BY THE WORK OF ALL TRADES.

1 FIRST FLOOR NEW REFLECTED CEILING PLAN
1/8" = 1'-0"

NORTH

0' 4' 8' 16' 32'

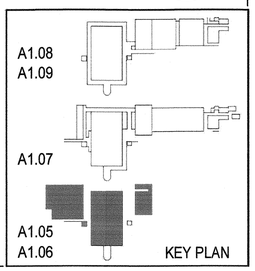

J & S CONSULTING ENGINEERS, INC.
ELECTRICAL ▫ MECHANICAL
FIRE PROTECTION
3111 Winona Ave., #102
Burbank, Ca 91504
Tel.: (818) 841-0303
Fax: (818) 841-8531
624 Moorpark Road,
Moorpark, CA 93021
Tel.: (805) 523-1700
Fax: (805) 523-1702
www.jandsconsulting.com
E-Mail:jsmail@jandsconsulting.com
PROJECT No. 45461

AMADOR WHITTLE
ARCHITECTS, INC.
28328 AGOURA ROAD, SUITE 203
AGOURA HILLS, CA 91301
(805) 530-3938 , (818) 874-0071

VENTURA COLLEGE

4667 TELEGRAPH ROAD, VENTURA, CALIFORNIA, 93003
VENTURA COUNTY COMMUNITY COLLEGE DISTRICT
MATH & SCIENCE COMPLEX

IDENTIFICATION STAMP
DIVISION OF THE STATE ARCHITECT
APPL. NO. 03-117754
AC FLS SS
DATE JUL 05 2017

NO.	DATE	DESCRIPTION	BY
	12.19.16	DSA SUBMITTAL	
REVISIONS			

LICENSED ARCHITECT JEAN ANN AMADOR C-22205 APPROVAL STATE OF CALIFORNIA

DRAWN BY:	TJL
CHECKED BY:	MJQ
DATE	05.12.17
JOB NO:	14-JS VCCCD

SHEET TITLE

FIRST FLOOR NEW REFLECTED CEILING PLAN

SHEET

A1.06

DWG # 9 OF 21

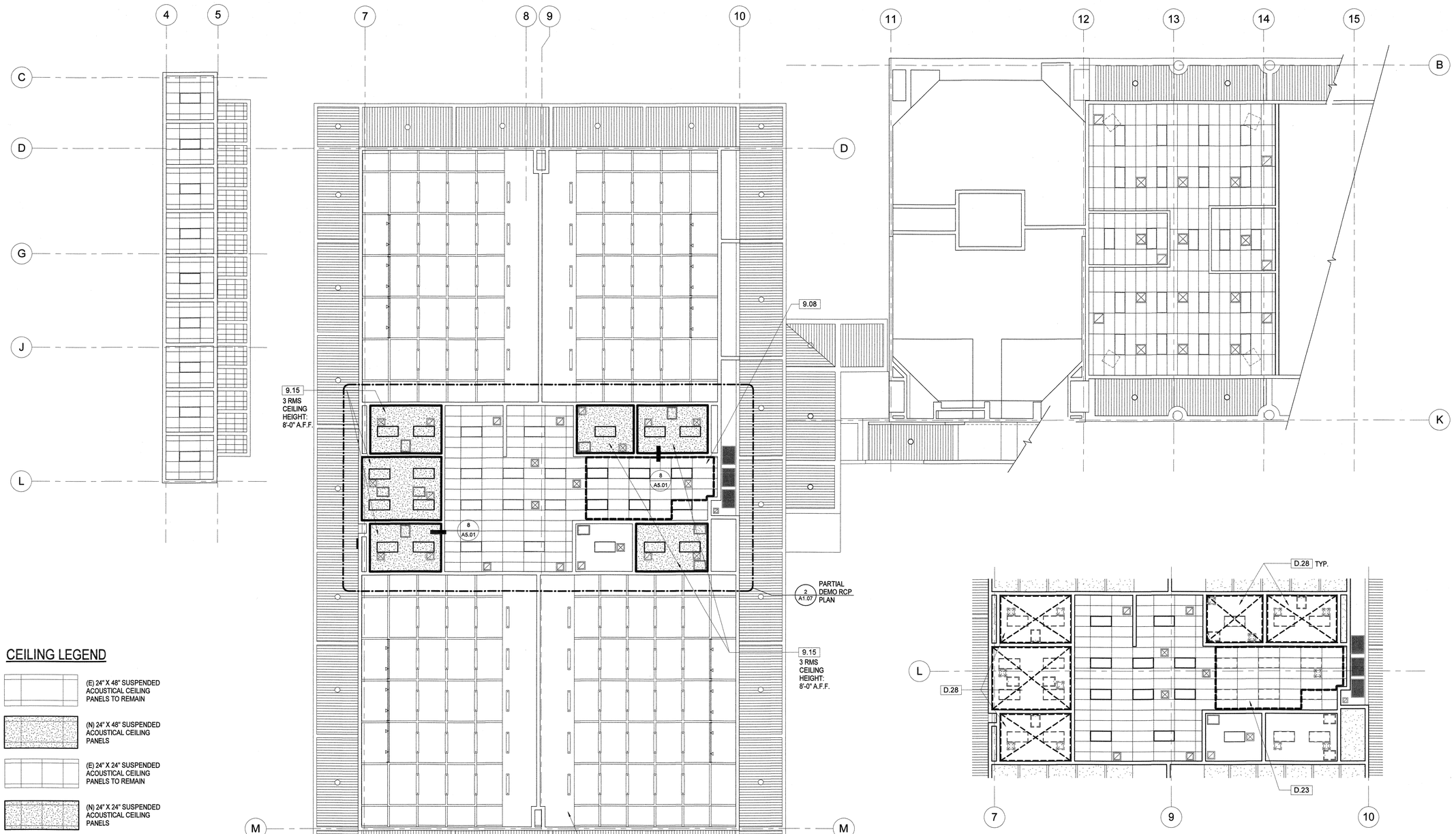

CEILING LEGEND

- (E) 24" X 48" SUSPENDED ACOUSTICAL CEILING PANELS TO REMAIN
- (N) 24" X 48" SUSPENDED ACOUSTICAL CEILING PANELS
- (E) 24" X 24" SUSPENDED ACOUSTICAL CEILING PANELS TO REMAIN
- (N) 24" X 24" SUSPENDED ACOUSTICAL CEILING PANELS
- (E) GYPSUM BOARD
- (N) GYPSUM BOARD
- EXISTING
- (E) TO BE REINSTALLED
- LIGHT FIXTURES
- VIDEO PROJECTOR
- PROJECTION SCREEN
- T.V. MONITOR BRACKET
- (E) AIR RETURN TO BE REMOVED AND REINSTALLED
- (E) EXHAUST TO BE REMOVED AND REINSTALLED
- (E) AIR SUPPLY TO BE REMOVED AND REINSTALLED
- (N) STRUCTURAL STEEL BEAM UNDERSIDE OF ROOF, SEE STRUCTURAL

DEMOLITION CEILING LEGEND

- REMOVE 24" x 48" SUSPENDED ACOUSTICAL CEILING PANELS AND GRID
- REMOVE PORTION OF VENEER PLASTER SOFFIT/CEILING
- REMOVE AND RE-INSTALL EXISTING RECESSED LIGHT FIXTURE 24" x 48"
- REMOVE AND RE-INSTALL SUPPLY AIR DIFFUSER AS PER MECH. DWGS.
- REMOVE AND RE-INSTALL RETURN AIR GRILL AS PER MECH. DWGS.

1 PARTIAL SECOND FLOOR REFLECTED CEILING PLAN
1/8" = 1'-0"

2 PARTIAL SECOND FLOOR REFLECTED CEILING PLAN - DEMO
1/8" = 1'-0"

DEMOLITION KEYNOTES

D.23 REMOVE AND PROTECT (E) CEILING TILE AND SECONDARY CROSS GRID MEMBERS TO ACCESS UNDERSIDE OF ROOF

D.28 REMOVE ENTIRE (E) 1-HOUR RATED CEILING, 6" HORIZONTAL SHAFT WALL

KEYNOTES

9.08 REINSTALL (E) CEILING TILE AND SECONDARY CROSS GRID MEMBERS AFTER COMPLETION OF DUCT AND ROOF UNDERSIDE WORK

9.15 (N) 1-HOUR RATED CEILING, 6" HORIZONTAL SHAFT WALL

E.13 (E) LINEAR METAL CEILING

E.14 (E) VENEER PLASTER SOFFIT

GENERAL CEILING NOTES

1. ALL CEILING FINISHES AND SYSTEMS SHOWN ON THE PLANS ARE EXISTING TO REMAIN UNLESS NOTED OTHERWISE.
2. SEE SHEETS A5.03 AND A5.04 FOR GENERAL SUSPENDED ACOUSTICAL CEILING NOTES AND SUSPENDED ACOUSTICAL CEILING INSTALLATION DETAILS.
3. SEE SHEETS A5.05 AND A5.06 FOR GENERAL SUSPENDED GYPSUM BOARD CEILING NOTES AND SUSPENDED GYPSUM BOARD CEILING INSTALLATION DETAILS.
4. PROVIDE AN ACCESS PANEL IN ALL NEW CEILINGS FOR ACCESS FOR FIRE SMOKE DAMPERS AND OTHER UTILITIES ABOVE THE CEILING REQUIRING ACCESS FOR MAINTENANCE. SEE 15/A5.04.
5. MAINTAIN THE FIRE RATING CONTINUITY OF STRUCTURE, WALLS, FLOOR AND CEILINGS INTERRUPTED BY THE WORK OF ALL TRADES.

NORTH

0' 4' 8' 16' 32'

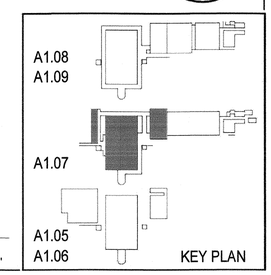

J & S CONSULTING ENGINEERS, INC.
ELECTRICAL ◦ MECHANICAL
FIRE PROTECTION
3111 Winona Ave., #102
Burbank, Ca 91504
Tel.: (818) 841-0303
Fax: (818) 841-8531
624 Moorpark Road,
Moorpark, CA 93021
Tel.: (805) 523-1700
Fax: (805) 523-1702
www.jandsconsulting.com
E-Mail:jsmail@jandsconsulting.com
PROJECT No. 45461

AMADOR WHITTLE
ARCHITECTS, INC.
28328 AGOURA ROAD, SUITE 203
AGOURA HILLS, CA 91301
(805) 530-3938 , (818) 874-0071

VENTURA COLLEGE
4667 TELEGRAPH ROAD, VENTURA, CALIFORNIA, 93003
VENTURA COUNTY COMMUNITY COLLEGE DISTRICT
MATH & SCIENCE COMPLEX

IDENTIFICATION STAMP
DIVISION OF THE STATE ARCHITECT
APPL. NO. 03-117754
AC ✓ FLS ✓ SS
DATE JUL 05 2017

NO.	DATE	DESCRIPTION	BY
	12.19.16	DSA SUBMITTAL	

REVISIONS

LICENSED ARCHITECT JEAN ANN AMADOR C-22205 RENEWAL DATE APRIL 30, 2019 STATE OF CALIFORNIA

DRAWN BY:	TJL
CHECKED BY:	JAA
DATE	05.12.17
JOB NO:	14-JS VCCCD

SHEET TITLE

PARTIAL SECOND FLOOR REFLECTED CEILING PLAN

SHEET

A1.07

DWG # 12 OF 62

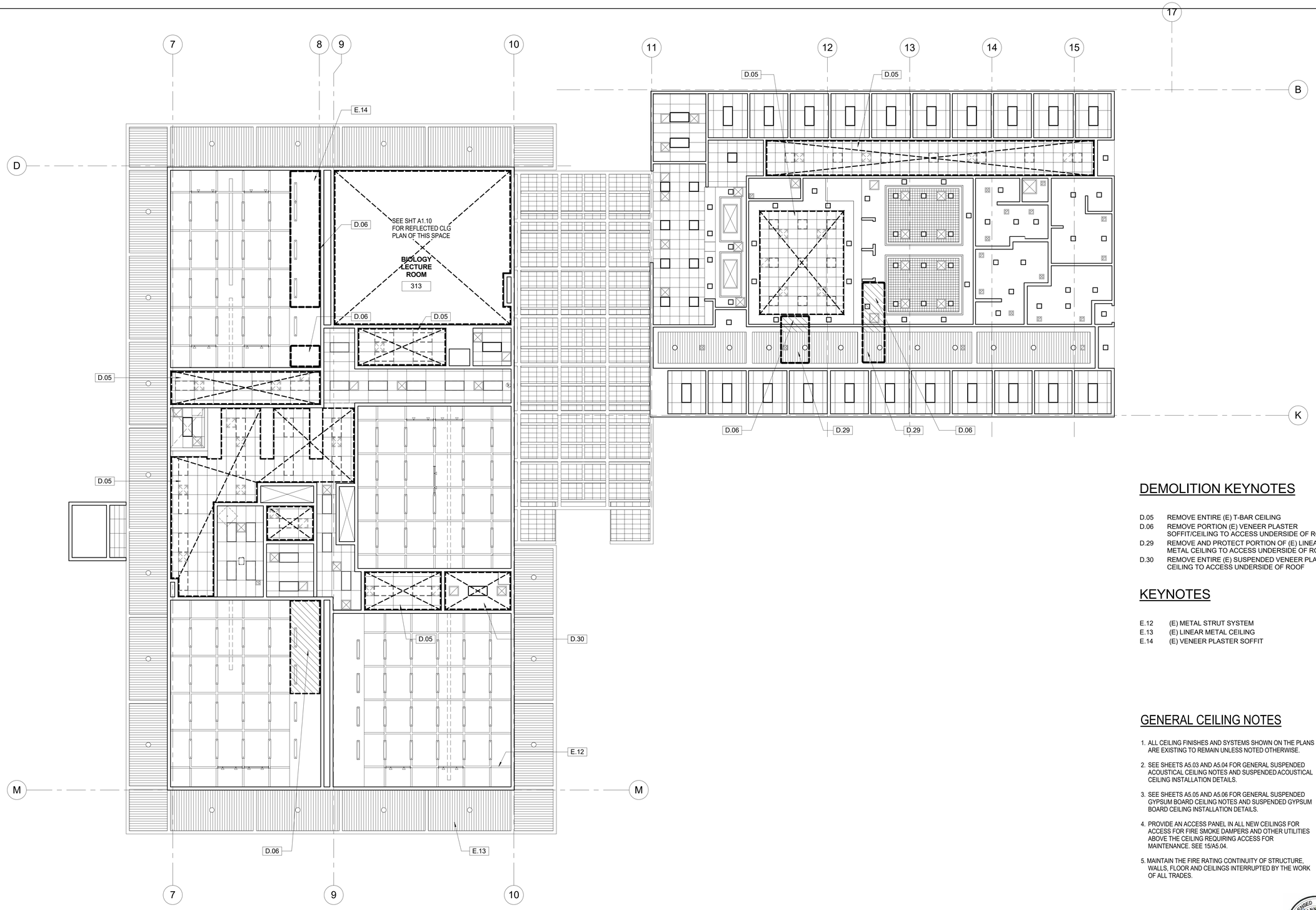

DEMOLITION KEYNOTES

D.05 REMOVE ENTIRE (E) T-BAR CEILING
D.06 REMOVE PORTION (E) VENEER PLASTER SOFFIT/CEILING TO ACCESS UNDERSIDE OF ROOF
D.29 REMOVE AND PROTECT PORTION OF (E) LINEAR METAL CEILING TO ACCESS UNDERSIDE OF ROOF
D.30 REMOVE ENTIRE (E) SUSPENDED VENEER PLASTER CEILING TO ACCESS UNDERSIDE OF ROOF

KEYNOTES

E.12 (E) METAL STRUT SYSTEM
E.13 (E) LINEAR METAL CEILING
E.14 (E) VENEER PLASTER SOFFIT

GENERAL CEILING NOTES

1. ALL CEILING FINISHES AND SYSTEMS SHOWN ON THE PLANS ARE EXISTING TO REMAIN UNLESS NOTED OTHERWISE.
2. SEE SHEETS A5.03 AND A5.04 FOR GENERAL SUSPENDED ACOUSTICAL CEILING NOTES AND SUSPENDED ACOUSTICAL CEILING INSTALLATION DETAILS.
3. SEE SHEETS A5.05 AND A5.06 FOR GENERAL SUSPENDED GYPSUM BOARD CEILING NOTES AND SUSPENDED GYPSUM BOARD CEILING INSTALLATION DETAILS.
4. PROVIDE AN ACCESS PANEL IN ALL NEW CEILINGS FOR ACCESS FOR FIRE SMOKE DAMPERS AND OTHER UTILITIES ABOVE THE CEILING REQUIRING ACCESS FOR MAINTENANCE. SEE 15/A5.04.
5. MAINTAIN THE FIRE RATING CONTINUITY OF STRUCTURE, WALLS, FLOOR AND CEILINGS INTERRUPTED BY THE WORK OF ALL TRADES.

DEMOLITION CEILING LEGEND

REMOVE 24" x 48" SUSPENDED ACOUSTICAL CEILING PANELS AND GRID

REMOVE PORTION OF VENEER PLASTER SOFFIT/CEILING

REMOVE AND RE-INSTALL EXISTING RECESSED LIGHT FIXTURE 24" x 48"

REMOVE AND RE-INSTALL SUPPLY AIR DIFFUSER AS PER MECH. DWGS.

REMOVE AND RE-INSTALL RETURN AIR GRILL AS PER MECH. DWGS.

1 PARTIAL THIRD FLOOR DEMOLITION REFLECTED CEILING PLAN
1/8" = 1'-0"

NORTH

0' 4' 8' 16' 32'

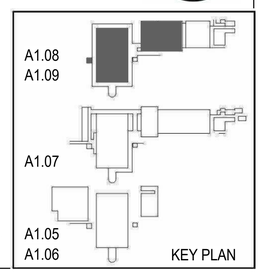

J & S CONSULTING ENGINEERS, INC.
ELECTRICAL ▫ MECHANICAL
FIRE PROTECTION
3111 Winona Ave., #102
Burbank, Ca 91504
Tel.: (818) 841-0303
Fax: (818) 841-8531
624 Moorpark Road,
Moorpark, CA 93021
Tel.: (805) 523-1700
Fax: (805) 523-1702
www.jandsconsulting.com
E-Mail:jsmail@jandsconsulting.com
PROJECT No. 45461

AMADOR WHITTLE
ARCHITECTS, INC.
28328 AGOURA ROAD, SUITE 203
AGOURA HILLS, CA 91301
(805) 530-3938 , (818) 874-0071

VENTURA COLLEGE
4667 TELEGRAPH ROAD, VENTURA, CALIFORNIA, 93003
VENTURA COUNTY COMMUNITY COLLEGE DISTRICT
MATH & SCIENCE COMPLEX

IDENTIFICATION STAMP
DIVISION OF THE STATE ARCHITECT
APPL. NO. 03-117754
AC _____ FLS _____ SS _____
DATE _____

NO.	DATE	DESCRIPTION	BY
1	08.28.18	ROOM NUMBER CHANGES	
	12.19.16	DSA SUBMITTAL	

REVISIONS

LICENSED ARCHITECT TERRY ANN WHITTLE C-22205 APPROVAL DATE STATE OF CALIFORNIA

DRAWN BY:	TJL
CHECKED BY:	MJQ
DATE	05.12.17
JOB NO:	14-JS VCCCD

SHEET TITLE
PARTIAL THIRD FLOOR DEMOLITION REFLECTED CEILING PLAN

SHEET
A1.08
DWG # ____ OF ____

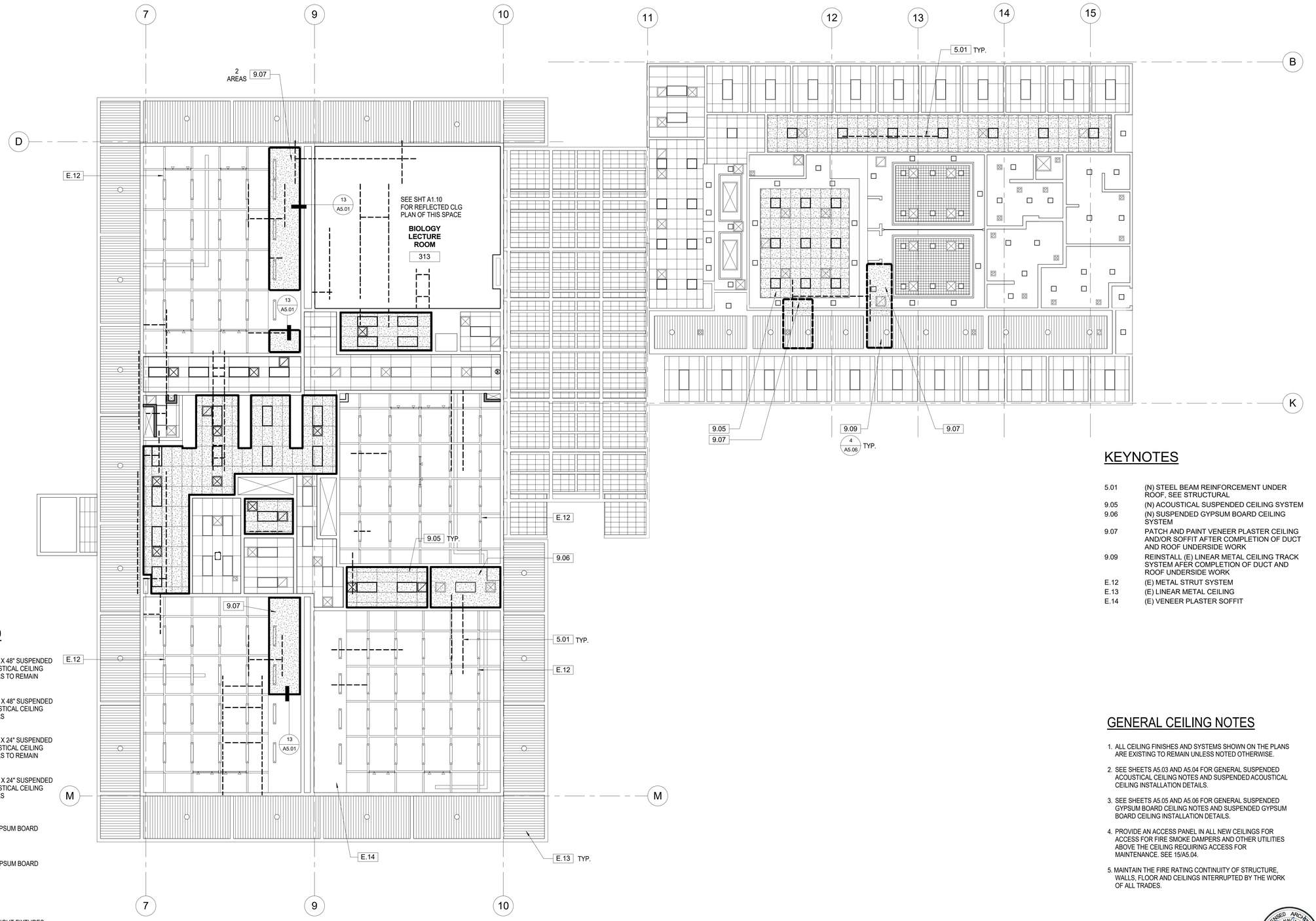

KEYNOTES

5.01	(N) STEEL BEAM REINFORCEMENT UNDER ROOF, SEE STRUCTURAL
9.05	(N) ACOUSTICAL SUSPENDED CEILING SYSTEM
9.06	(N) SUSPENDED GYPSUM BOARD CEILING SYSTEM
9.07	PATCH AND PAINT VENEER PLASTER CEILING AND/OR SOFFIT AFTER COMPLETION OF DUCT AND ROOF UNDERSIDE WORK
9.09	REINSTALL (E) LINEAR METAL CEILING TRACK SYSTEM AFER COMPLETION OF DUCT AND ROOF UNDERSIDE WORK
E.12	(E) METAL STRUT SYSTEM
E.13	(E) LINEAR METAL CEILING
E.14	(E) VENEER PLASTER SOFFIT

CEILING LEGEND

- (E) 24" X 48" SUSPENDED ACOUSTICAL CEILING PANELS TO REMAIN
- (N) 24" X 48" SUSPENDED ACOUSTICAL CEILING PANELS
- (E) 24" X 24" SUSPENDED ACOUSTICAL CEILING PANELS TO REMAIN
- (N) 24" X 24" SUSPENDED ACOUSTICAL CEILING PANELS
- (E) GYPSUM BOARD
- (N) GYPSUM BOARD
- EXISTING / (E) TO BE REINSTALLED — LIGHT FIXTURES
- VIDEO PROJECTOR
- PROJECTION SCREEN
- T.V. MONITOR BRACKET
- (E) AIR RETURN TO BE REMOVED AND REINSTALLED
- (E) EXHAUST TO BE REMOVED AND REINSTALLED
- (E) AIR SUPPLY TO BE REMOVED AND REINSTALLED
- (N) STRUCTURAL STEEL BEAM UNDERSIDE OF ROOF, SEE STRUCTURAL

GENERAL CEILING NOTES

1. ALL CEILING FINISHES AND SYSTEMS SHOWN ON THE PLANS ARE EXISTING TO REMAIN UNLESS NOTED OTHERWISE.
2. SEE SHEETS A5.03 AND A5.04 FOR GENERAL SUSPENDED ACOUSTICAL CEILING NOTES AND SUSPENDED ACOUSTICAL CEILING INSTALLATION DETAILS.
3. SEE SHEETS A5.05 AND A5.06 FOR GENERAL SUSPENDED GYPSUM BOARD CEILING NOTES AND SUSPENDED GYPSUM BOARD CEILING INSTALLATION DETAILS.
4. PROVIDE AN ACCESS PANEL IN ALL NEW CEILINGS FOR ACCESS FOR FIRE SMOKE DAMPERS AND OTHER UTILITIES ABOVE THE CEILING REQUIRING ACCESS FOR MAINTENANCE. SEE 15/A5.04.
5. MAINTAIN THE FIRE RATING CONTINUITY OF STRUCTURE, WALLS, FLOOR AND CEILINGS INTERRUPTED BY THE WORK OF ALL TRADES.

LICENSED ARCHITECT JEAN ANN AMADOR C-22205 APRIL 30, 2019 RENEWAL DATE STATE OF CALIFORNIA

1 PARTIAL THIRD FLOOR NEW REFLECTED CEILING PLAN
1/8" = 1'-0"

NORTH

0' 4' 8' 16' 32'

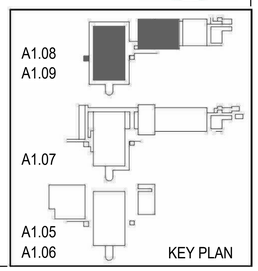

KEY PLAN

J & S CONSULTING ENGINEERS, INC.
ELECTRICAL • MECHANICAL
FIRE PROTECTION
3111 Winona Ave., #102
Burbank, Ca 91504
Tel.: (818) 841-0303
Fax: (818) 841-8531
624 Moorpark Road,
Moorpark, CA 93021
Tel.: (805) 523-1700
Fax: (805) 523-1702
www.jandsconsulting.com
E-Mail:jsmail@jandsconsulting.com
PROJECT No. 45461

AMADOR WHITTLE ARCHITECTS, INC.
28328 AGOURA ROAD, SUITE 203
AGOURA HILLS, CA 91301
(805) 530-3938 , (818) 874-0071

VENTURA COLLEGE

4667 TELEGRAPH ROAD, VENTURA, CALIFORNIA, 93003
VENTURA COUNTY COMMUNITY COLLEGE DISTRICT
MATH & SCIENCE COMPLEX

IDENTIFICATION STAMP
DIVISION OF THE STATE ARCHITECT
APPL. NO. 03-117754
AC _____ FLS _____ SS _____
DATE _____

NO.	DATE	DESCRIPTION	BY
1	08.28.18	ROOM NUMBER CHANGES	
	12.19.16	DSA SUBMITTAL	

REVISIONS

DRAWN BY:	TJL
CHECKED BY:	MJQ
DATE	05.12.17
JOB NO:	14-JS VCCCD

SHEET TITLE
PARTIAL THIRD FLOOR NEW REFLECTED CEILING PLAN

SHEET
A1.09
DWG # ____ OF ____

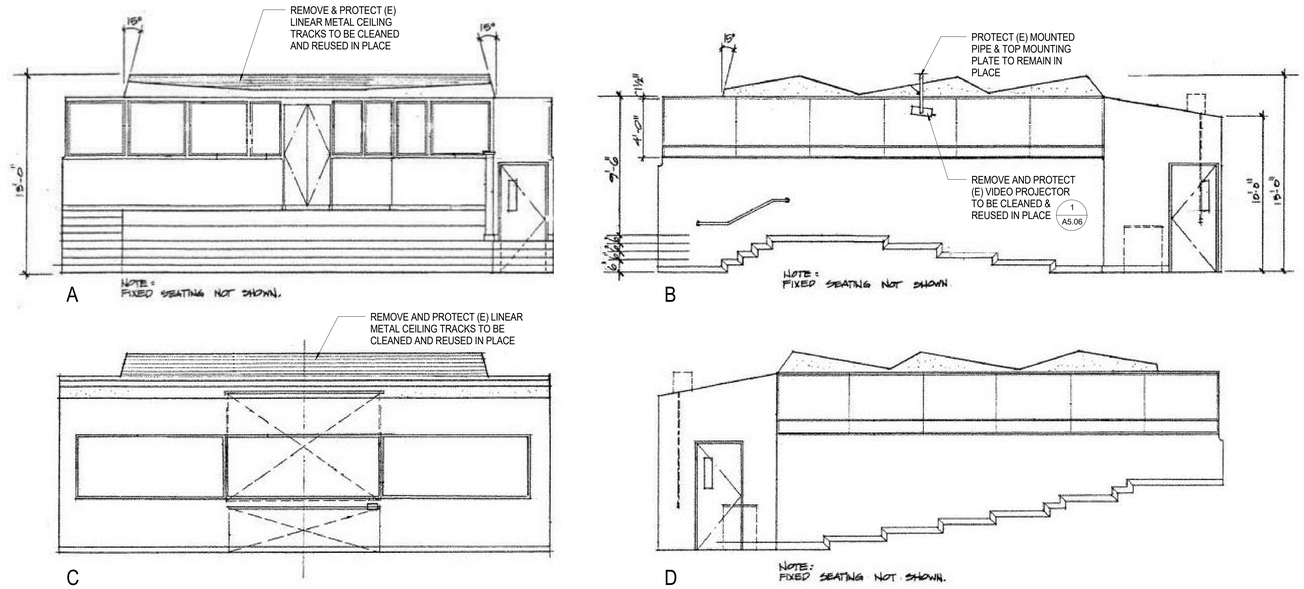

3 INTERIOR ELEVATION-BIOLOGY LECTURE RM 313

1/4" = 1'-0"

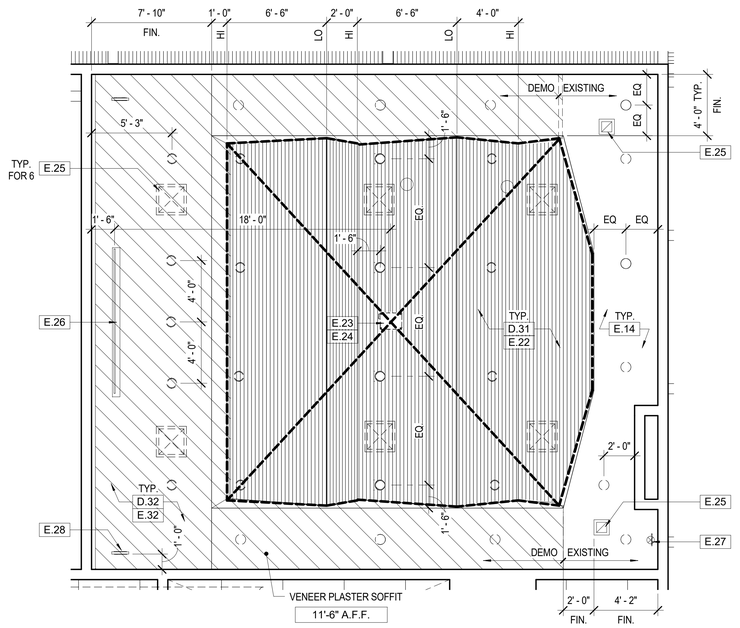

1 BIOLOGY LECTURE RM 313 DEMO RCP

1/4" = 1'-0"

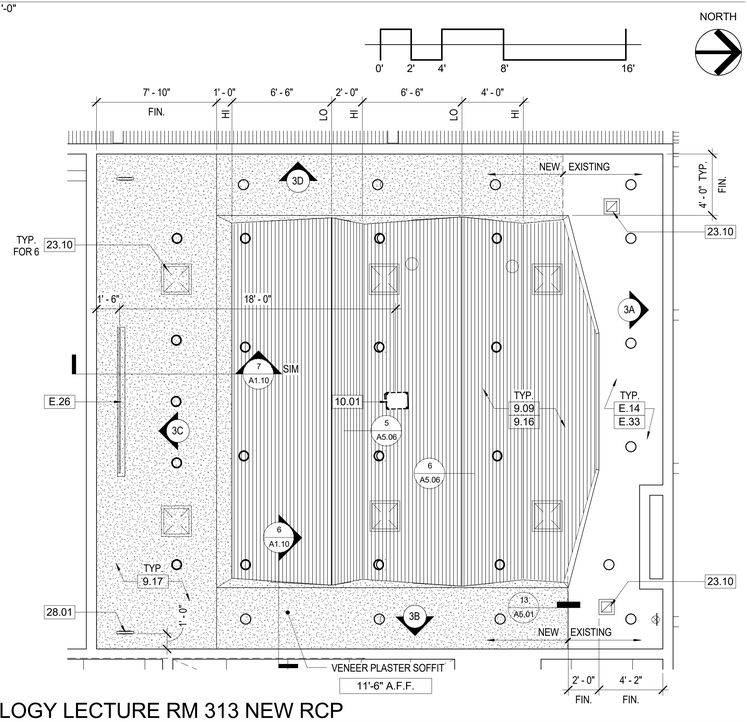

2 BIOLOGY LECTURE RM 313 NEW RCP

1/4" = 1'-0"

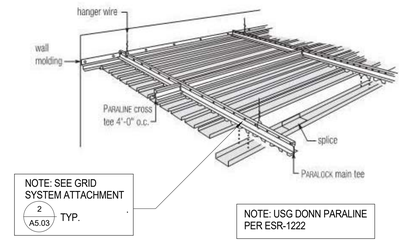

5 LINEAR METAL CEILING SYSTEM

3" = 1'-0"

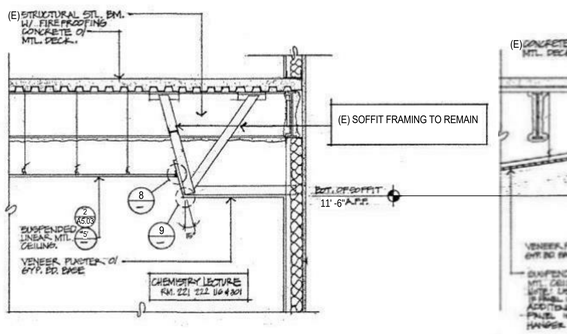

6 WALL SECTION

1/2" = 1'-0"

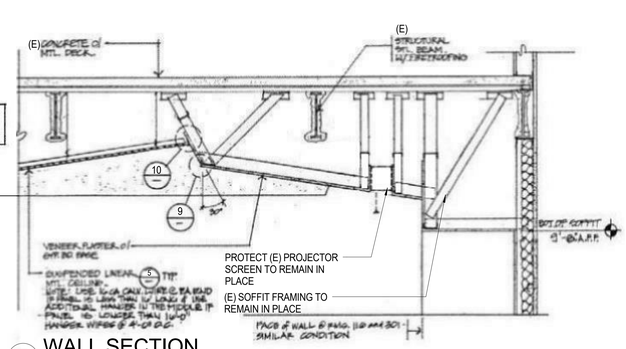

7 WALL SECTION

1/2" = 1'-0"

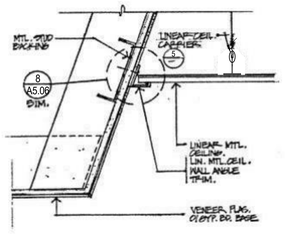

8 SOFFIT/LIN. CEILING

3" = 1'-0"

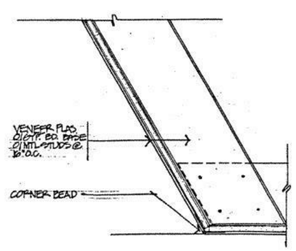

9 SOFFIT DETAIL

3" = 1'-0"

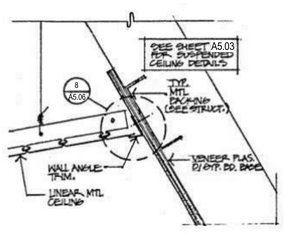

10 SOFFIT/LIN. CEILING

3" = 1'-0"

DEMOLITION KEYNOTES

D.31	DEMOLISH (E) CEILING SUSPENSION SYSTEM
D.32	DEMOLISH (E) VENEER PLASTER CEILING FINISH

KEYNOTES

9.09	REINSTALL (E) LINEAR METAL CEILING TRACK SYSTEM AFER COMPLETION OF DUCT AND ROOF UNDERSIDE WORK
9.16	(N) SUSPENSION SYSTEM TO SUPPORT REINSTALLED (E) LINEAR METAL CEILING TRACKS
9.17	(N) VENEER PLASTER CEILING FINISH TO MATCH (E)
10.01	REINSTALL (E) VIDEO PROJECTOR AFTER COMPLETION OF DUCT AND ROOF UNDERSIDE WORK
23.10	REINSTALL (E) MECHANICAL EQUIPMENT
28.01	REINSTALL (E) EXIT SIGN CENTER ON DOOR
E.14	(E) VENEER PLASTER SOFFIT
E.22	REMOVE AND PROTECT (E) LINEAR METAL TRACKS TO BE CLEANED AND REUSED IN PLACE
E.23	REMOVE AND PROTECT (E) VIDEO PROJECTOR TO BE CLEANED AND REUSED IN PLACE
E.24	PROTECT (E) MOUNTED PIPE AND TOP MOUNTING PLATE TO BE REUSED
E.25	REMOVE AND PROTECT (E) MECHANICAL EQUIPMENT TO BE CLEANED AND REUSED IN PLACE
E.26	PROTECT (E) PROJECTOR SCREEN, TO REMAIN IN PLACE
E.27	(E) EXIT SIGN TO REMAIN IN PLACE
E.28	REMOVE AND PROTECT (E) EXIT SIGN TO BE CLEANED AND REUSED IN PLACE
E.32	(E) SOFFIT FRAMING TO REMAIN
E.33	PROTECT (E) SOUND ABSORBING PANELS TO REMAIN IN PLACE

0' 2' 4' 8' 16'

LICENSED ARCHITECT KEAU-NINN JAMES YIM C-22205 APPRL 30, 2019 RENEWAL DATE STATE OF CALIFORNIA

A1.10

KEY PLAN

J & S CONSULTING ENGINEERS, INC.
ELECTRICAL ▫ MECHANICAL
FIRE PROTECTION
3111 Winona Ave., #102
Burbank, Ca 91504
Tel.: (818) 841-0303
Fax: (818) 841-8531
624 Moorpark Road,
Moorpark, CA 93021
Tel.: (805) 523-1700
Fax: (805) 523-1702
www.jandsconsulting.com
E-Mail:jsmail@jandsconsulting.com
PROJECT No. 45461

AMADOR WHITTLE ARCHITECTS, INC.
28328 AGOURA ROAD, SUITE 203
AGOURA HILLS, CA 91301
(805) 530-3938 , (818) 874-0071

VENTURA COLLEGE

4667 TELEGRAPH ROAD, VENTURA, CALIFORNIA, 93003
VENTURA COUNTY COMMUNITY COLLEGE DISTRICT
MATH & SCIENCE COMPLEX

IDENTIFICATION STAMP
DIVISION OF THE STATE ARCHITECT
APPL. NO. 03-117754
AC ____ FLS ____ SS ____
DATE ____

NO.	DATE	DESCRIPTION	BY
1	08.28.18	ROOM NUMBER CHANGES	
	12.19.16	DSA SUBMITTAL	

REVISIONS

DRAWN BY:	WTJ
CHECKED BY:	JAA
DATE	05.12.17
JOB NO:	14-JS VCCCD

SHEET TITLE
BIOLOGY LECTURE ROOM-ENLARGED RCP PLANS, INT. ELEVS, WALL SECTIONS & DETAILS

SHEET
A1.10
DWG # ____ OF ____

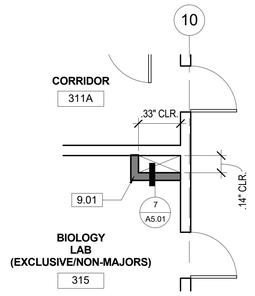

4 ENLARGED PLAN - (N) 1 HR SHAFT
1/4" = 1'-0"

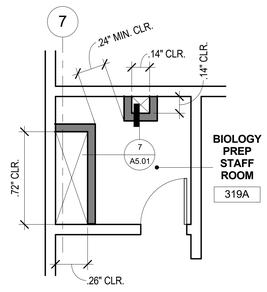

5 ENLARGED PLAN - (N) 1 HR SHAFT
1/4" = 1'-0"

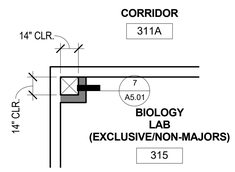

6 ENLARGED PLAN - (N) 1 HR SHAFT
1/4" = 1'-0"

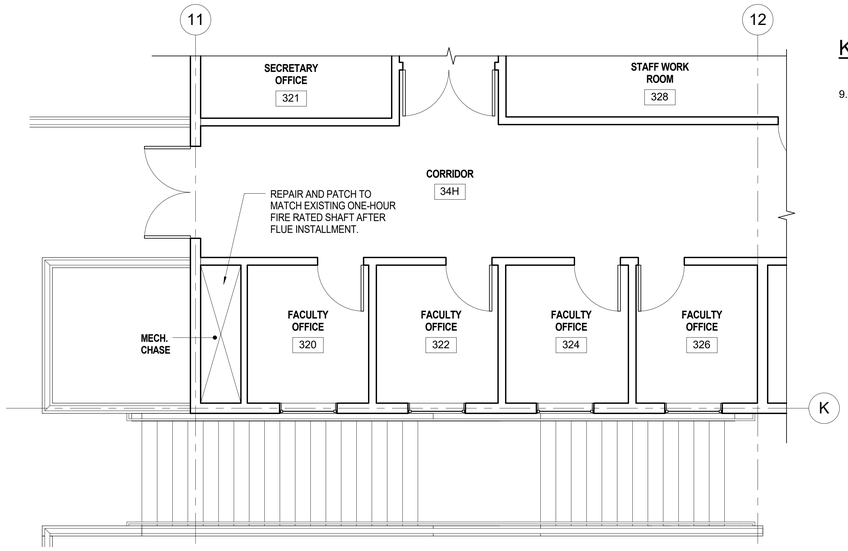

3 ENLARGED PARTIAL PLAN - THIRD FLOOR (BLDG 'C')
1/4" = 1'-0"

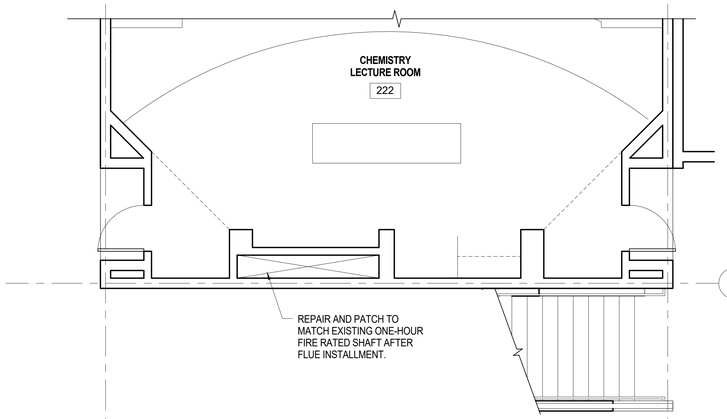

2 ENLARGED PARTIAL PLAN - SECOND FLOOR (BLDG 'C')
1/4" = 1'-0"

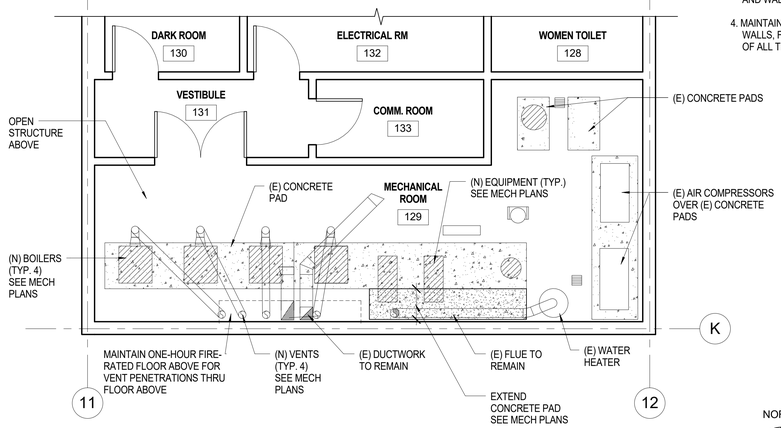

1 ENLARGED PARTIAL PLAN - FIRST FLOOR (BLDG 'C')
1/4" = 1'-0"

KEYNOTES

9.01 (N) 4" SHAFT WALL METAL STUDS AT 24" O.C.

WALL LEGEND

EXISTING WALL TO REMAIN

NEW 4" SHAFT WALL METAL STUDS AT 24" O.C.
1-HOUR RATED

GENERAL NOTES

1. ALL ITEMS SHOWN HERE ARE EXISTING TO REMAIN UNLESS NOTED OTHERWISE.
2. FOR NEW PIPE PENETRATIONS THRU 1-HR RATED FLOOR AND WALLS, SEE DETAILS 12/A5.01 AND 16/A5.01.
4. MAINTAIN THE FIRE RATING CONTINUITY OF STRUCTURE, WALLS, FLOOR AND CEILINGS INTERRUPTED BY THE WORK OF ALL TRADES.

NORTH

0' 2' 4' 8' 16'

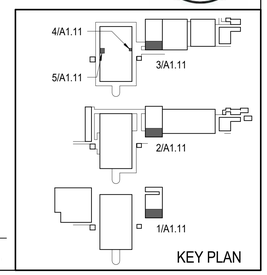

KEY PLAN

J & S CONSULTING ENGINEERS, INC.
ELECTRICAL ▫ MECHANICAL
FIRE PROTECTION
3111 Winona Ave., #102
Burbank, Ca 91504
Tel.: (818) 841-0303
Fax: (818) 841-8531
624 Moorpark Road,
Moorpark, CA 93021
Tel.: (805) 523-1700
Fax: (805) 523-1702
www.jandsconsulting.com
E-Mail:jsmail@jandsconsulting.com
PROJECT No. 45461

AMADOR WHITTLE
ARCHITECTS, INC.
28328 AGOURA ROAD, SUITE 203
AGOURA HILLS, CA 91301
(805) 530-3938 , (818) 874-0071

VENTURA COLLEGE
4667 TELEGRAPH ROAD, VENTURA, CALIFORNIA, 93003
VENTURA COUNTY COMMUNITY COLLEGE DISTRICT
MATH & SCIENCE COMPLEX

IDENTIFICATION STAMP
DIVISION OF THE STATE ARCHITECT
APPL. NO. 03-117754
AC _____ FLS _____ SS _____
DATE _____

NO.	DATE	DESCRIPTION	BY
1	08.28.18	ROOM NUMBER CHANGES	
	12.19.16	DSA SUBMITTAL	

REVISIONS

LICENSED ARCHITECT
JEAN ANN JAY DOE
C-22205
APRIL 30, 2018
RENEWAL DATE
STATE OF CALIFORNIA

DRAWN BY:	MJQ
CHECKED BY:	MJQ
DATE	05.12.17
JOB NO:	14-JS VCCCD

SHEET TITLE

ENLARGED PARTIAL FLOOR PLANS - BUILDINGS 'B' & 'C'

SHEET

A1.11

DWG # ____ OF ____

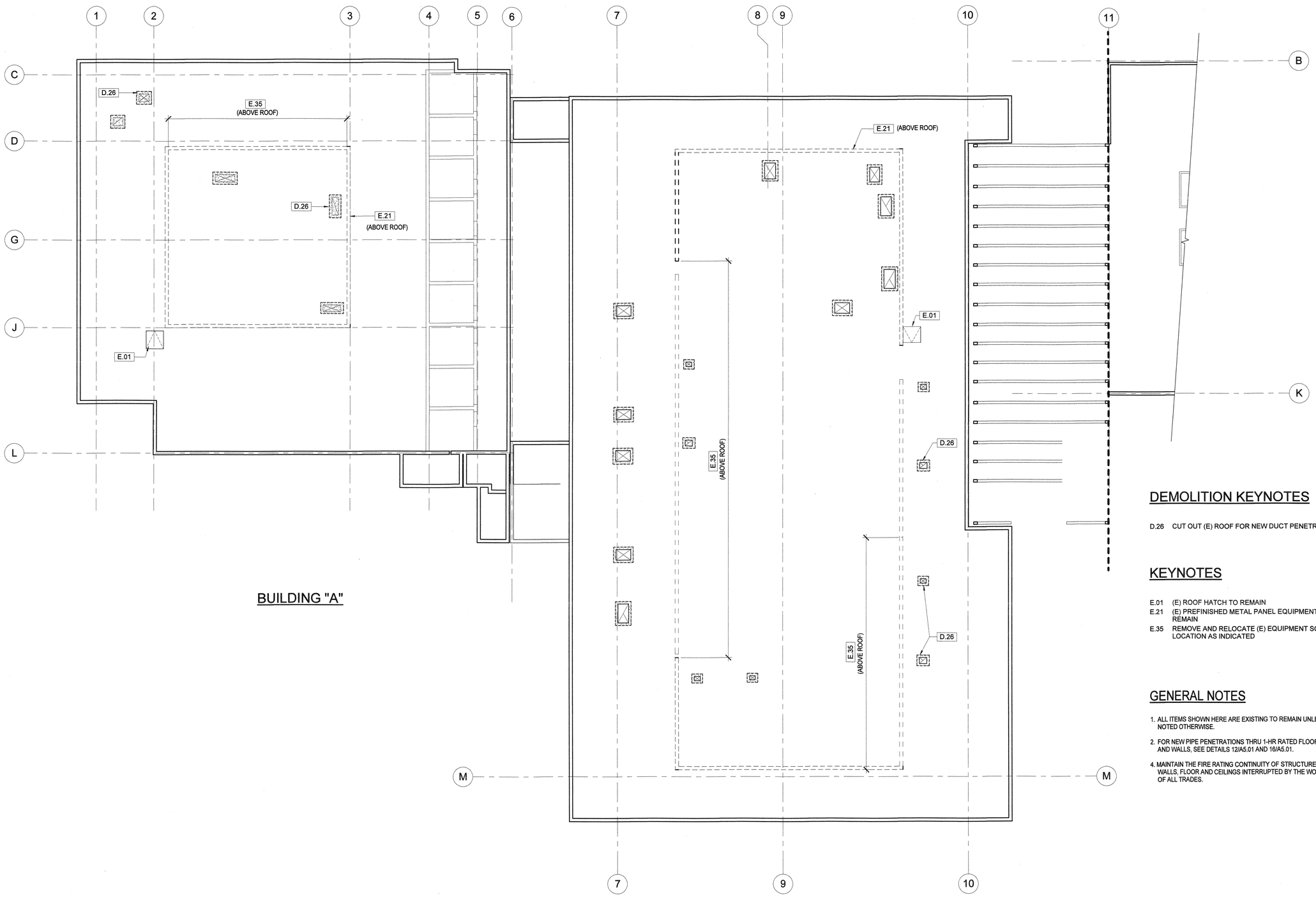

BUILDING "A"

BUILDING "B"

DEMOLITION KEYNOTES

D.26 CUT OUT (E) ROOF FOR NEW DUCT PENETRATION

KEYNOTES

E.01 (E) ROOF HATCH TO REMAIN
E.21 (E) PREFINISHED METAL PANEL EQUIPMENT SCREEN TO REMAIN
E.35 REMOVE AND RELOCATE (E) EQUIPMENT SCREEN TO NEW LOCATION AS INDICATED

GENERAL NOTES

1. ALL ITEMS SHOWN HERE ARE EXISTING TO REMAIN UNLESS NOTED OTHERWISE.
2. FOR NEW PIPE PENETRATIONS THRU 1-HR RATED FLOOR AND WALLS, SEE DETAILS 12/A5.01 AND 16/A5.01.
4. MAINTAIN THE FIRE RATING CONTINUITY OF STRUCTURE, WALLS, FLOOR AND CEILINGS INTERRUPTED BY THE WORK OF ALL TRADES.

NORTH

0' 4' 8' 16' 32'

A1.14
A1.12
A1.13
KEY PLAN

1 BUILDINGS 'A' AND 'B' DEMOLITION (UNDERDIDE OF ROOF) PLAN
1/8" = 1'-0"

J & S CONSULTING ENGINEERS, INC.
ELECTRICAL ◦ MECHANICAL
FIRE PROTECTION
3111 Winona Ave., #102
Burbank, Ca 91504
Tel.: (818) 841-0303
Fax: (818) 841-8531
624 Moorpark Road,
Moorpark, CA 93021
Tel.: (805) 523-1700
Fax: (805) 523-1702
www.jandsconsulting.com
E-Mail:jsmail@jandsconsulting.com
PROJECT No. 45461

AMADOR WHITTLE
ARCHITECTS, INC.
28328 AGOURA ROAD, SUITE 203
AGOURA HILLS, CA 91301
(805) 530-3938 , (818) 874-0071

VENTURA COLLEGE
4667 TELEGRAPH ROAD, VENTURA, CALIFORNIA, 93003
VENTURA COUNTY COMMUNITY COLLEGE DISTRICT
MATH & SCIENCE COMPLEX

IDENTIFICATION STAMP
DIVISION OF THE STATE ARCHITECT
APPL. NO. 03-117754
AC — FLS — SS
DATE JUL 05 2017

NO.	DATE	DESCRIPTION	BY
	12.19.16	DSA SUBMITTAL	

REVISIONS

DRAWN BY:	KA
CHECKED BY:	MJQ
DATE	05.12.17
JOB NO:	14-JS VCCCD

SHEET TITLE
BUILDINGS 'A' AND 'B' DEMOLITION (UNDERSIDE OF ROOF) PLAN

SHEET
A1.12

DWG# 15 OF 62

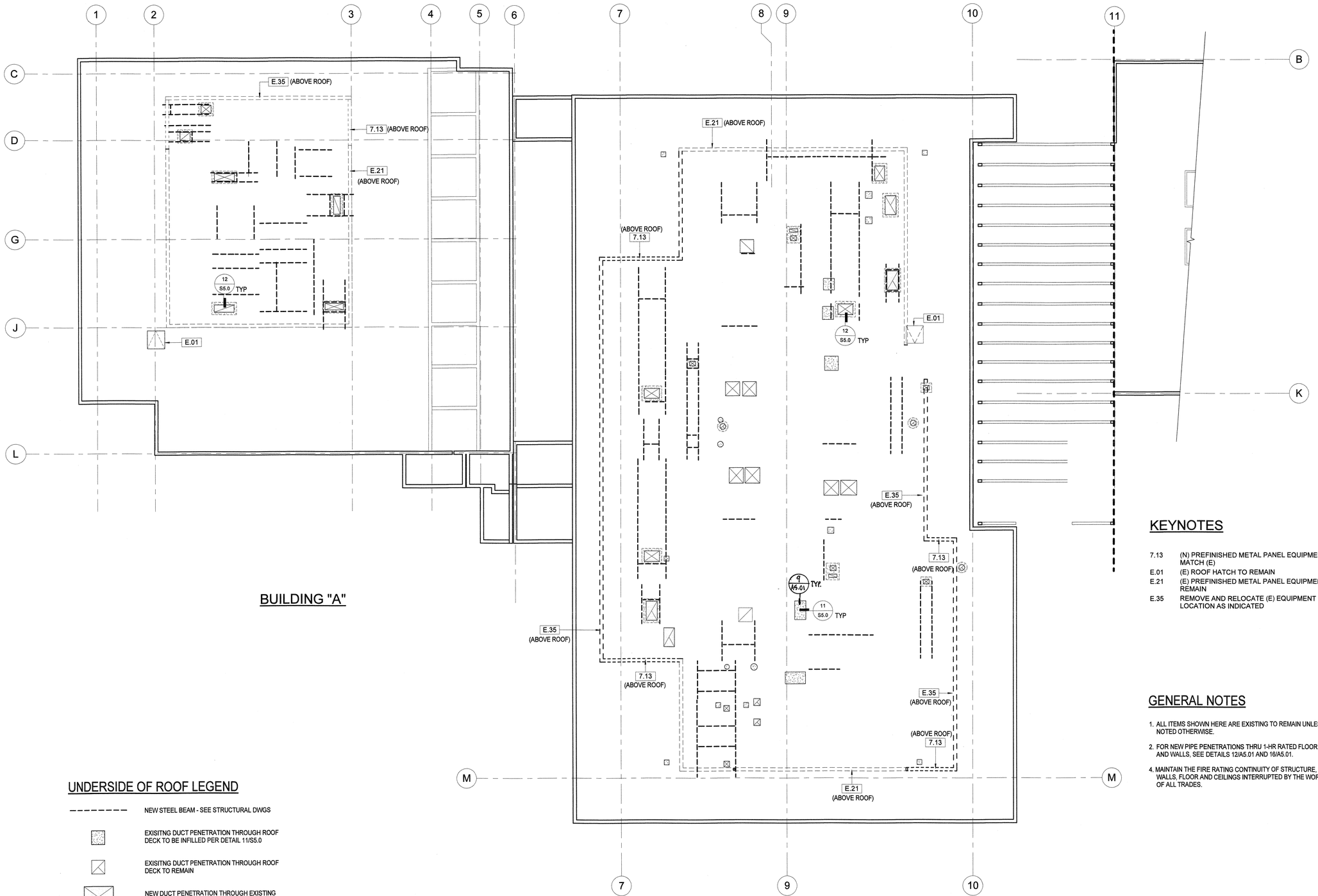

BUILDING "A"

BUILDING "B"

UNDERSIDE OF ROOF LEGEND

- NEW STEEL BEAM - SEE STRUCTURAL DWGS
- EXISITNG DUCT PENETRATION THROUGH ROOF DECK TO BE INFILLED PER DETAIL 11/S5.0
- EXISITNG DUCT PENETRATION THROUGH ROOF DECK TO REMAIN
- NEW DUCT PENETRATION THROUGH EXISTING ROOF DECK

KEYNOTES

7.13 (N) PREFINISHED METAL PANEL EQUIPMENT SCREEN TO MATCH (E)
E.01 (E) ROOF HATCH TO REMAIN
E.21 (E) PREFINISHED METAL PANEL EQUIPMENT SCREEN TO REMAIN
E.35 REMOVE AND RELOCATE (E) EQUIPMENT SCREEN TO NEW LOCATION AS INDICATED

GENERAL NOTES

1. ALL ITEMS SHOWN HERE ARE EXISTING TO REMAIN UNLESS NOTED OTHERWISE.
2. FOR NEW PIPE PENETRATIONS THRU 1-HR RATED FLOOR AND WALLS, SEE DETAILS 12/A5.01 AND 16/A5.01.
4. MAINTAIN THE FIRE RATING CONTINUITY OF STRUCTURE, WALLS, FLOOR AND CEILINGS INTERRUPTED BY THE WORK OF ALL TRADES.

NORTH

0' 4' 8' 16' 32'

1 BUILDINGS 'A' AND 'B' NEW (UNDERSIDE OF ROOF) PLAN
1/8" = 1'-0"

J & S CONSULTING ENGINEERS, INC.
ELECTRICAL ▫ MECHANICAL
FIRE PROTECTION
3111 Winona Ave., #102
Burbank, Ca 91504
Tel.: (818) 841-0303
Fax: (818) 841-8531
624 Moorpark Road,
Moorpark, CA 93021
Tel.: (805) 523-1700
Fax: (805) 523-1702
www.jandsconsulting.com
E-Mail:jsmail@jandsconsulting.com
PROJECT No. 45461

AMADOR WHITTLE
ARCHITECTS, INC.
28328 AGOURA ROAD, SUITE 203
AGOURA HILLS, CA 91301
(805) 530-3938 , (818) 874-0071

VENTURA COLLEGE
4667 TELEGRAPH ROAD, VENTURA, CALIFORNIA, 93003
VENTURA COUNTY COMMUNITY COLLEGE DISTRICT
MATH & SCIENCE COMPLEX

IDENTIFICATION STAMP
DIVISION OF THE STATE ARCHITECT
APPL. NO. 03-117754
AC ___ FLS ___ SS
DATE JUL 05 2017

NO.	DATE	DESCRIPTION	BY
	12.19.16	DSA SUBMITTAL	
REVISIONS			

DRAWN BY:	KA
CHECKED BY:	MJQ
DATE	05.12.17
JOB NO:	14-JS VCCCD

SHEET TITLE

BUILDINGS 'A' AND 'B' NEW (UNDERSIDE OF ROOF) PLAN

SHEET

A1.13

DWG # 16 OF 23

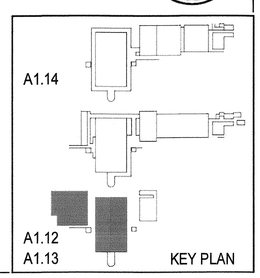

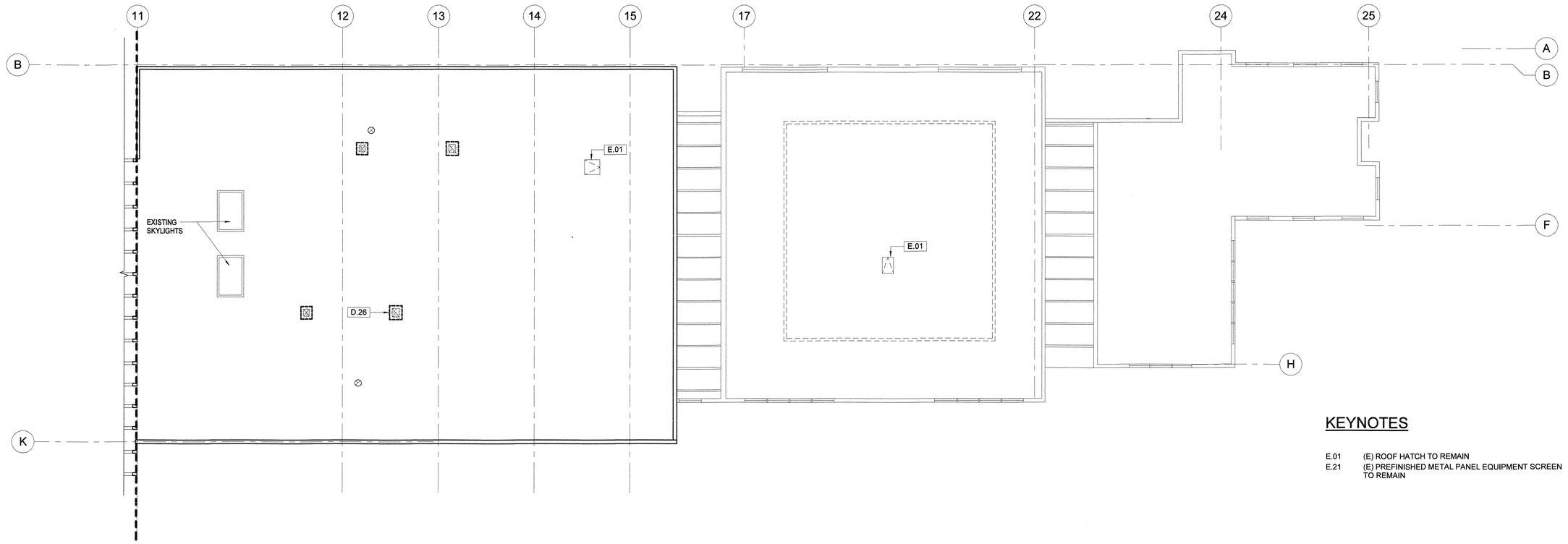

1 BUILDING 'C' DEMOLITION (UNDERSIDE OF ROOF) PLAN
1/8" = 1'-0"

KEYNOTES

E.01 (E) ROOF HATCH TO REMAIN
E.21 (E) PREFINISHED METAL PANEL EQUIPMENT SCREEN TO REMAIN

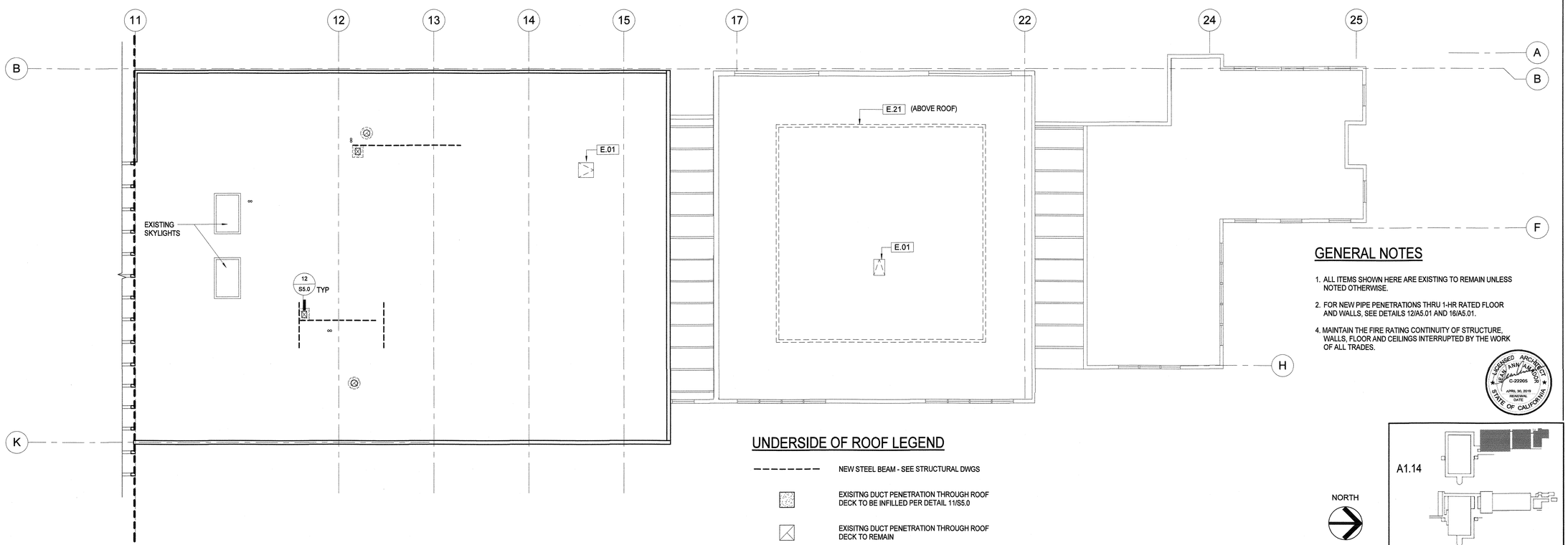

2 BUILDING 'C' NEW (UNDERSIDE OF ROOF) PLAN
1/8" = 1'-0"

GENERAL NOTES

1. ALL ITEMS SHOWN HERE ARE EXISTING TO REMAIN UNLESS NOTED OTHERWISE.
2. FOR NEW PIPE PENETRATIONS THRU 1-HR RATED FLOOR AND WALLS, SEE DETAILS 12/A5.01 AND 16/A5.01.
4. MAINTAIN THE FIRE RATING CONTINUITY OF STRUCTURE, WALLS, FLOOR AND CEILINGS INTERRUPTED BY THE WORK OF ALL TRADES.

UNDERSIDE OF ROOF LEGEND

NEW STEEL BEAM - SEE STRUCTURAL DWGS

EXISITNG DUCT PENETRATION THROUGH ROOF DECK TO BE INFILLED PER DETAIL 11/S5.0

EXISITNG DUCT PENETRATION THROUGH ROOF DECK TO REMAIN

NEW DUCT PENETRATION THROUGH EXISTING ROOF DECK

NORTH

0' 4' 8' 16' 32'

J & S CONSULTING ENGINEERS, INC.
ELECTRICAL • MECHANICAL
FIRE PROTECTION
3111 Winona Ave., #102
Burbank, Ca 91504
Tel.: (818) 841-0303
Fax: (818) 841-8531
624 Moorpark Road,
Moorpark, CA 93021
Tel.: (805) 523-1700
Fax: (805) 523-1702
www.jandsconsulting.com
E-Mail:jsmail@jandsconsulting.com
PROJECT No. 45461

AMADOR WHITTLE
ARCHITECTS, INC.
28328 AGOURA ROAD, SUITE 203
AGOURA HILLS, CA 91301
(805) 530-3938 , (818) 874-0071

VENTURA COLLEGE
4667 TELEGRAPH ROAD, VENTURA, CALIFORNIA, 93003
VENTURA COUNTY COMMUNITY COLLEGE DISTRICT
MATH & SCIENCE COMPLEX

IDENTIFICATION STAMP
DIVISION OF THE STATE ARCHITECT
APPL. NO. 03-117754
AC — FLS — SS
DATE JUL 05 2017

NO.	DATE	DESCRIPTION	BY
	12.19.16	DSA SUBMITTAL	

REVISIONS

LICENSED ARCHITECT MICHAEL J. WHITTLE C-22205 APRIL 30, 2019 REGISTRATION DATE STATE OF CALIFORNIA

DRAWN BY:	KA
CHECKED BY:	MJQ
DATE	05.12.17
JOB NO:	14-JS VCCCD

SHEET TITLE
BUILDING 'C' DEMOLITION & NEW (UNDERSIDE OF ROOF) PLANS

SHEET
A1.14
DWG # 17 OF 82

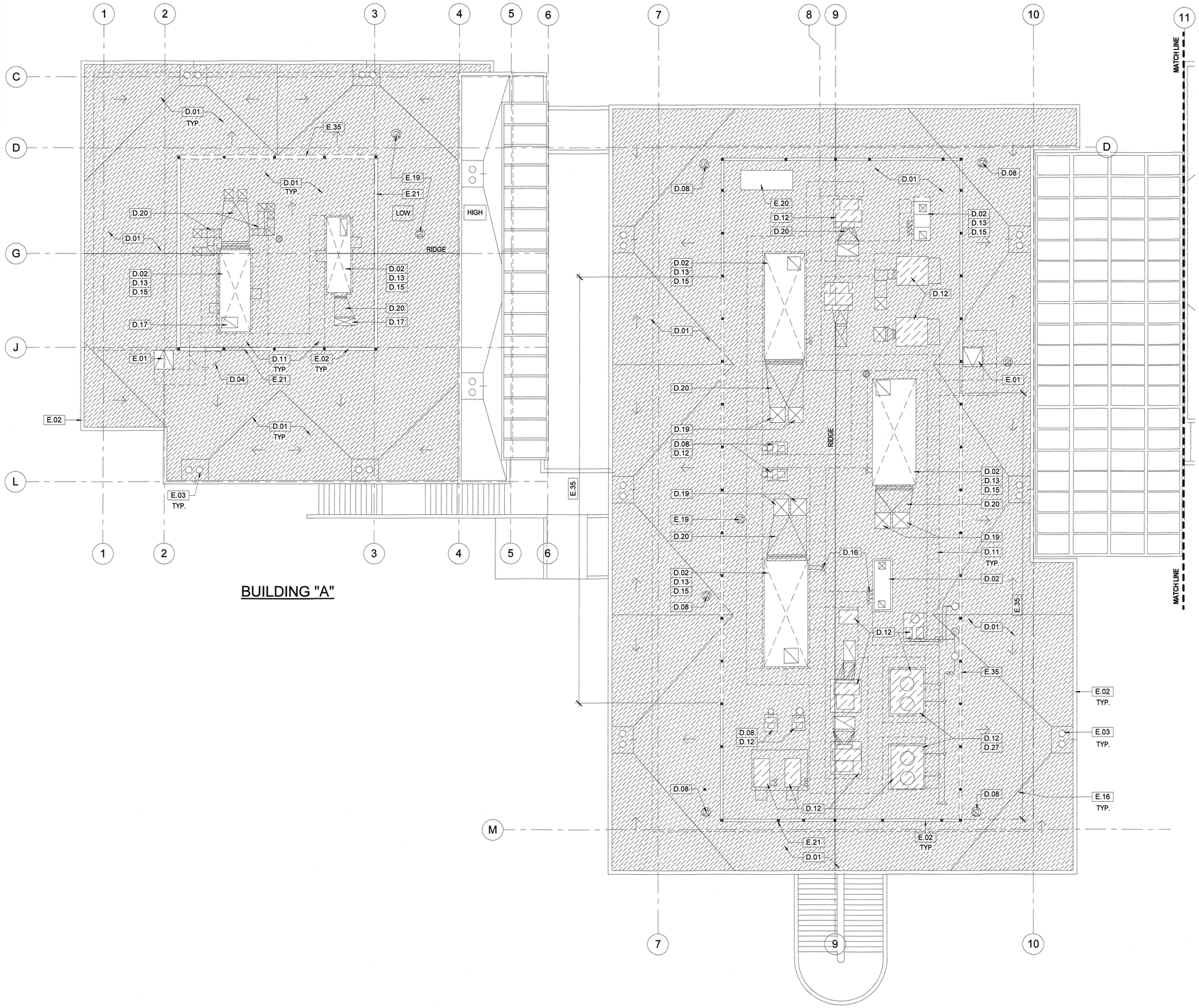

BUILDING "A"

BUILDING "B"

DEMOLITION KEYNOTES

D.01 REMOVE EXISTING BUILT-UP ROOFING AND FLASHING. CLEAN AND PREP SURFACE FOR NEW PVC ROOF AND FLASHINGS.
D.02 DISCONNECT AND REMOVE EXISTING HVAC UNIT, SEE MECHANICAL.
D.04 DEMOLISH (E) DOOR, FRAME AND HARDWARE
D.08 DISCONNECT AND REMOVE (E) EXHAUST FAN AND (E) CURB
D.11 REMOVE (E) WALKPADS
D.12 REMOVE (E) CONCRETE PAD AND CORRESPONDING UNIT SUPPORT
D.13 REMOVE (E) MECHANICAL PLATFORM CURB
D.15 REMOVE (E) STEEL EQUIPMENT SUPPORT FRAME
D.16 REMOVE AND CAP (E) PIPE THRU ROOF, SEE MECHANICAL
D.17 RE-USE/WIDEN (E) ROOF OPENING
D.19 REMOVE (E) DUCT THROUGH ROOF, SEE MECHANICAL
D.20 REMOVE (E) DUCTWORK, SEE MECHANICAL
D.27 REMOVE (E) CHILLER UNIT

KEYNOTES

E.01 (E) ROOF HATCH TO REMAIN
E.02 (E) COPING TO REMAIN
E.03 (E) ROOF DRAIN TO REMAIN
E.16 (E) CRICKET TO REMAIN
E.19 (E) EXHAUST FAN TO REMAIN
E.20 (E) ELECTRICAL SWITCHBOARD TO REMAIN
E.21 (E) PREFINISHED METAL PANEL EQUIPMENT SCREEN TO REMAIN
E.35 REMOVE AND RELOCATE (E) EQUIPMENT SCREEN TO NEW LOCATION AS INDICATED

ROOFING DEMO LEGEND

REMOVE (E) BUILT-UP ROOFING AND FLASHING

REMOVE (E) CONCRETE PAD AND CORRESPONDING UNIT SUPPORT

DISCONNECT AND REMOVE EXISTING HVAC UNIT

(E) WALKPAD TO BE REMOVED

(E) EQUIPMENT SCREEN TO BE RELOCATED. SEE A1.16 FOR NEW LOCATION OF RELOCATED EQUIPMENT SCREEN

GENERAL NOTES

1. ALL ITEMS SHOWN HERE ARE EXISTING TO REMAIN UNLESS NOTED OTHERWISE.
2. FOR ROOF SYSTEM, SEE DETAIL 1/A5.01.
3. SEE PLUMBING, MECHANICAL AND ELECTRICAL ROOF PLANS FOR PIPE, DUCT AND CONDUIT PENETRATIONS. SEE 6/A5.02, 7/A5.02, 12/A5.02 AND 13/A5.02 FOR DUCT / FLUE / VENT PENETRATION DETAILS.
4. MAINTAIN THE FIRE RATING CONTINUITY OF STRUCTURWALLS, FLOOR AND CEILINGS INTERRUPTED BY THE WORK OF ALL TRADES.
5. SEE 10/A5.02 FOR PIPE SUPPORT.

NORTH

0' 4' 8' 16' 32'

1 BUILDINGS 'A' AND 'B' DEMOLITION ROOF PLAN
1/8" = 1'-0"

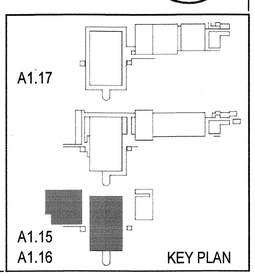

J & S CONSULTING ENGINEERS, INC.
ELECTRICAL ▫ MECHANICAL
FIRE PROTECTION
3111 Winona Ave., #102
Burbank, Ca 91504
Tel.: (818) 841-0303
Fax: (818) 841-8531
624 Moorpark Road,
Moorpark, CA 93021
Tel.: (805) 523-1700
Fax: (805) 523-1702
www.jandsconsulting.com
E-Mail:jsmail@jandsconsulting.com
PROJECT No. 45461

AMADOR WHITTLE
ARCHITECTS, INC.
28328 AGOURA ROAD, SUITE 203
AGOURA HILLS, CA 91301
(805) 530-3938 , (818) 874-0071

VENTURA COLLEGE
4667 TELEGRAPH ROAD, VENTURA, CALIFORNIA, 93003
VENTURA COUNTY COMMUNITY COLLEGE DISTRICT
MATH & SCIENCE COMPLEX

IDENTIFICATION STAMP
DIVISION OF THE STATE ARCHITECT
APPL. NO. 03-117754
AC ___ FLS ___ SS ___
DATE JUL 05 2017

NO.	DATE	DESCRIPTION	BY
	12.19.16	DSA SUBMITTAL	
REVISIONS			

LICENSED ARCHITECT
JEAN ANN AMADOR
C-22205
APRIL 30, 2019
RENEWAL DATE
STATE OF CALIFORNIA

DRAWN BY:	KA
CHECKED BY:	MJQ
DATE	05.12.17
JOB NO:	14-JS VCCCD

SHEET TITLE

BUILDINGS 'A' AND 'B' DEMOLITION ROOF PLAN

SHEET

A1.15

DWG# 10 OF 09

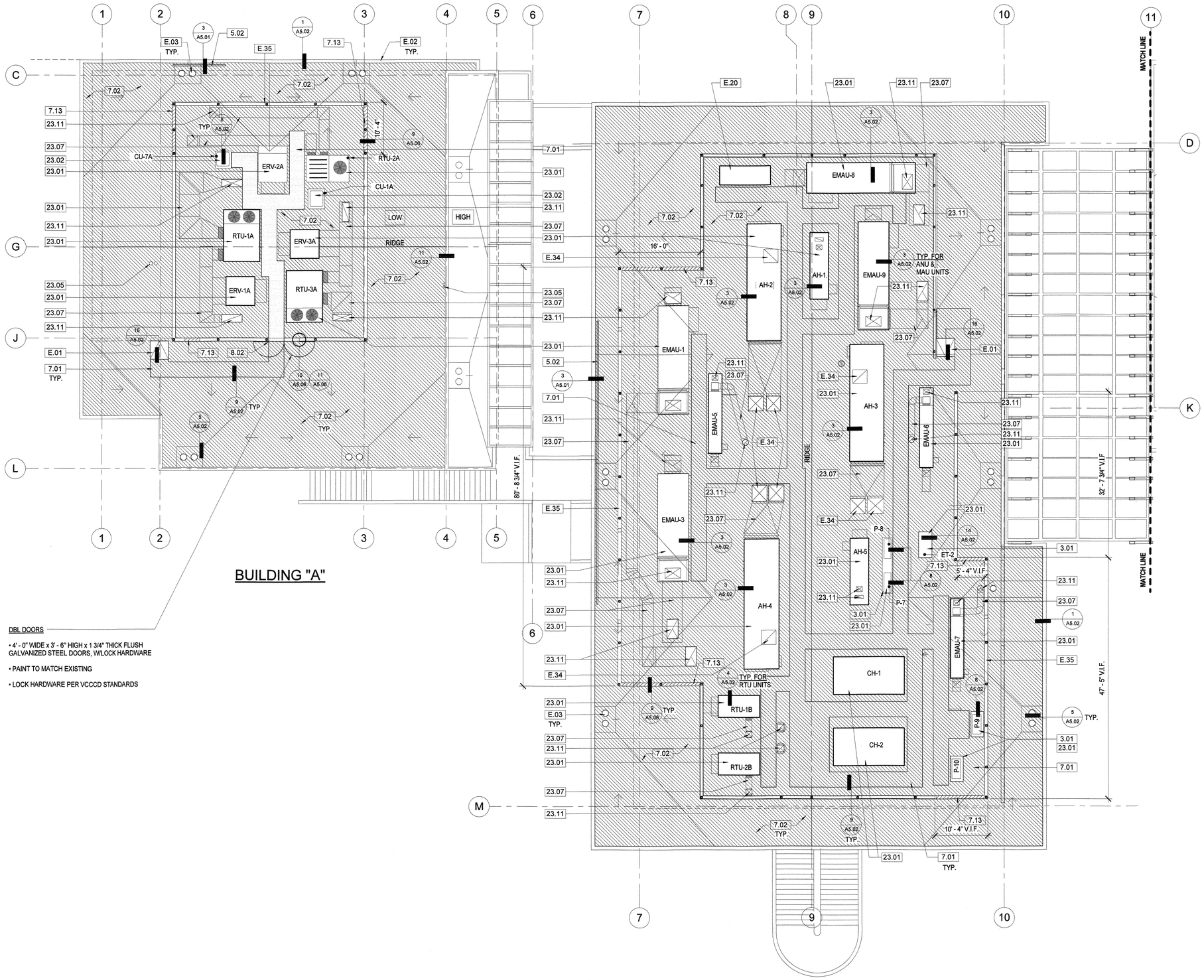

KEYNOTES

3.01	(N) CONCRETE PAD
5.02	(N) GALVANIZED STEEL GUARDRAIL
7.01	(N) WALKPADS
7.02	(N) PVC MEMBRANE OVER 1/2" THICK HIGH DENSITY INSULATION (SEE SPECS)
7.13	(N) PREFINISHED METAL PANEL EQUIPMENT SCREEN TO MATCH (E)
8.02	(N) PROVIDE 8'-0" ACCESS OPENING (DOUBLE 4'-0" DOORS) TO SERVICE THE UNIT
23.01	(N) HVAC EQUIPMENT, SEE MECHANICAL
23.02	(N) CONDENSER UNIT, SEE MECHANICAL
23.05	(N) REFRIGERANT PIPING THROUGH ROOF, SEE MECHANICAL
23.07	(N) DUCT, SEE MECHANICAL
23.11	(N) DUCT PENETRATION THROUGH ROOF, SEE MECHANICAL
E.01	(E) ROOF HATCH TO REMAIN
E.02	(E) COPING TO REMAIN
E.03	(E) ROOF DRAIN TO REMAIN
E.20	(E) ELECTRICAL SWITCHBOARD TO REMAIN
E.34	(E) DUCT PENETRATION THROUGH ROOF, SEE MECHANICAL
E.35	REMOVE AND RELOCATE (E) EQUIPMENT SCREEN TO NEW LOCATION AS INDICATED

ROOFING LEGEND

- (N) PVC MEMBRANE OVER 1/2" THICK HIGH DENSITY INSULATION
- (N) WALKPAD
- NEW MECHANICAL EQUIPMENT
- (N) EQUIPMENT SCREEN TO MATCH (E)

GENERAL NOTES

1. ALL ITEMS SHOWN HERE ARE EXISTING TO REMAIN UNLESS NOTED OTHERWISE.
2. FOR ROOF SYSTEM, SEE DETAIL 1/A5.01.
3. SEE PLUMBING, MECHANICAL AND ELECTRICAL ROOF PLANS FOR PIPE, DUCT AND CONDUIT PENETRATIONS. SEE 6/A5.02, 7/A5.02, 12/A5.02 AND 13/A5.02 FOR DUCT / FLUE / VENT PENETRATION DETAILS.
4. MAINTAIN THE FIRE RATING CONTINUITY OF STRUCTURWALLS, FLOOR AND CEILINGS INTERRUPTED BY THE WORK OF ALL TRADES.
5. SEE 10/A5.02 FOR PIPE SUPPORT.

1 BUILDINGS 'A' AND 'B' NEW ROOF PLAN
1/8" = 1'-0"

NORTH

0' 4' 8' 16' 32'

A1.17
A1.15
A1.16
KEY PLAN

J & S CONSULTING ENGINEERS, INC.
ELECTRICAL ▫ MECHANICAL
FIRE PROTECTION
3111 Winona Ave., #102
Burbank, Ca 91504
Tel.: (818) 841-0303
Fax: (818) 841-8531
624 Moorpark Road,
Moorpark, CA 93021
Tel.: (805) 523-1700
Fax: (805) 523-1702
www.jandsconsulting.com
E-Mail:jsmail@jandsconsulting.com
PROJECT No. 45461

AMADOR WHITTLE
ARCHITECTS, INC.
28328 AGOURA ROAD, SUITE 203
AGOURA HILLS, CA 91301
(805) 530-3938 , (818) 874-0071

VENTURA COLLEGE
4667 TELEGRAPH ROAD, VENTURA, CALIFORNIA, 93003
VENTURA COUNTY COMMUNITY COLLEGE DISTRICT
MATH & SCIENCE COMPLEX

IDENTIFICATION STAMP
DIVISION OF THE STATE ARCHITECT
APPL. NO. 03-117754
AC ___ FLS ___ SS ___
DATE JUL 05 2017

NO.	DATE	DESCRIPTION	BY
	12.19.16	DSA SUBMITTAL	
REVISIONS			

LICENSED ARCHITECT JEAN ANN AMADOR C-22265 APRIL 30, 2019 RENEWAL DATE STATE OF CALIFORNIA

DRAWN BY:	MJQ
CHECKED BY:	JAA
DATE	05.12.17
JOB NO:	14-JS VCCCD

SHEET TITLE
BUILDINGS 'A' AND 'B' NEW ROOF PLAN

SHEET
A1.16
DWG # 19 OF 21

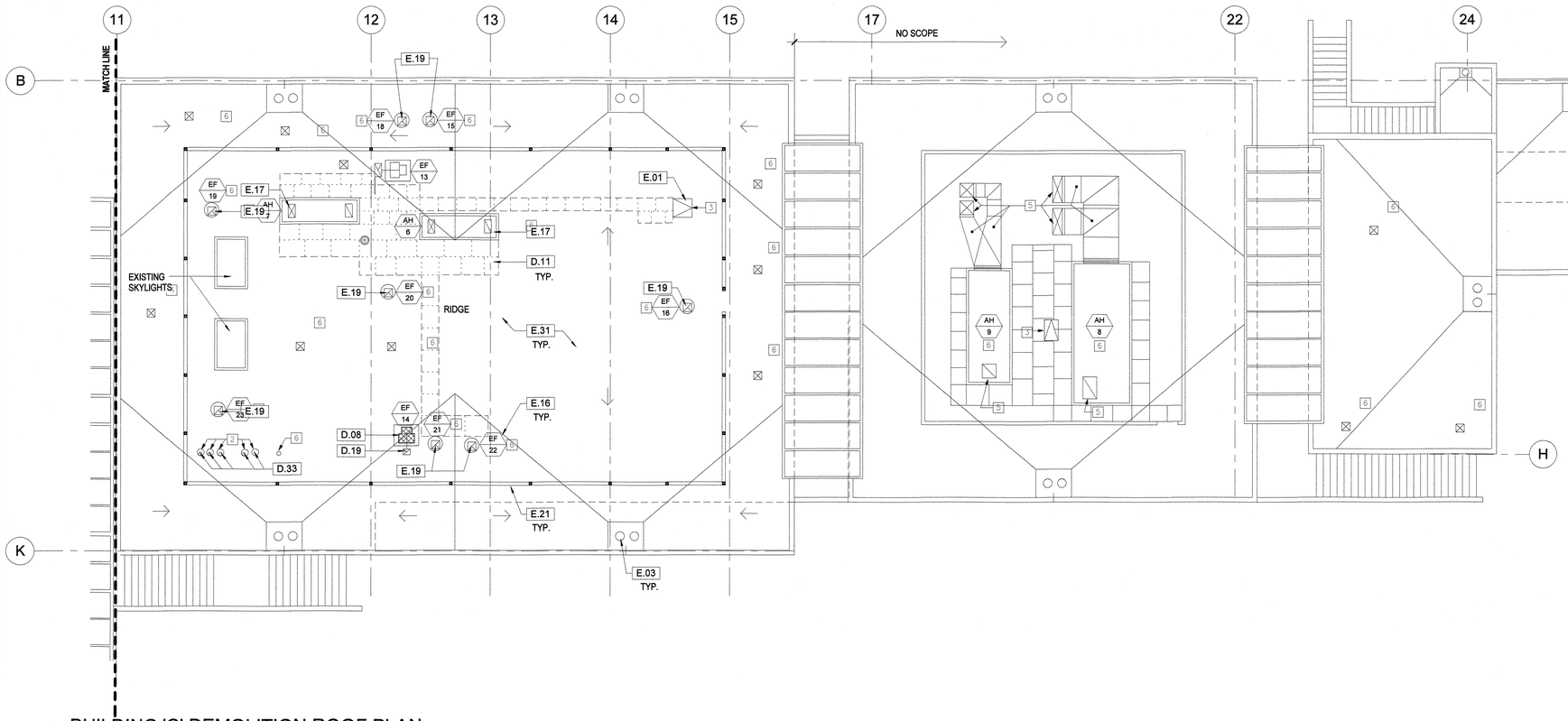

1 BUILDING 'C' DEMOLITION ROOF PLAN
1/8" = 1'-0"

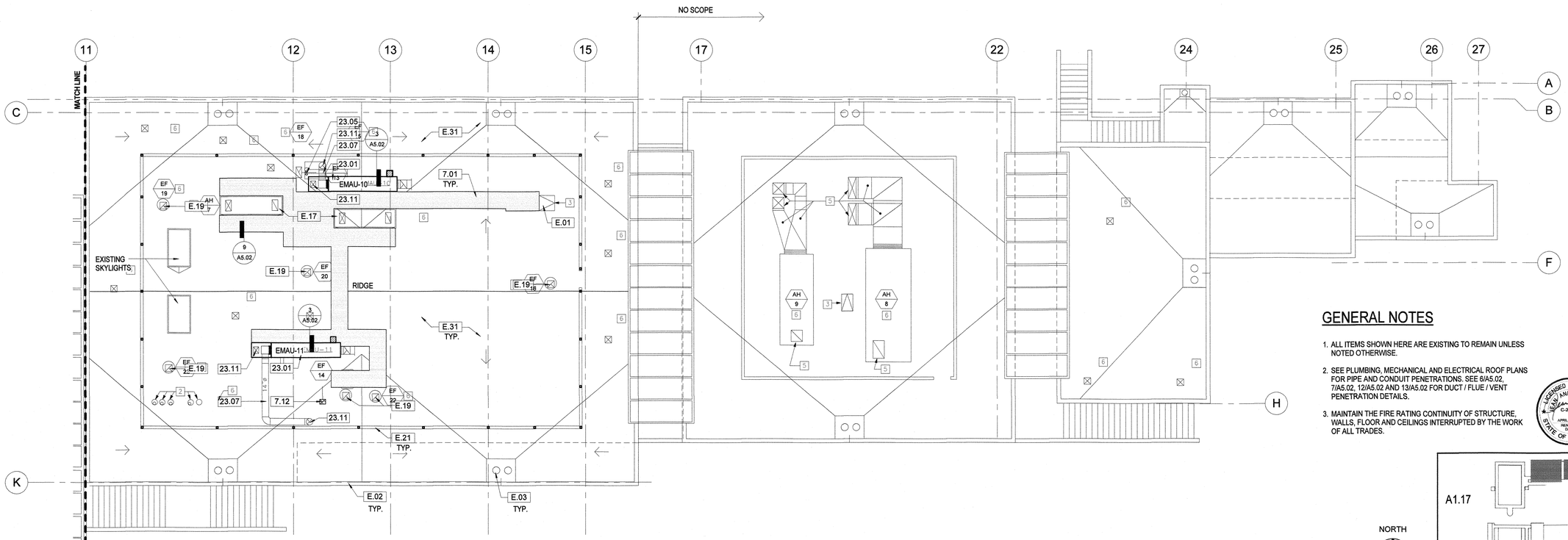

2 BUILDING 'C' NEW ROOF PLAN
1/8" = 1'-0"

DEMOLITION KEYNOTES

D.08 DISCONNECT AND REMOVE (E) EXHAUST FAN AND (E) CURB
D.11 REMOVE (E) WALKPADS
D.19 REMOVE (E) DUCT THROUGH ROOF, SEE MECHANICAL
D.33 DISCONNECT AND REMOVE (E) HVAC EQUIPMENT, SEE MECHANICAL

KEYNOTES

7.01 (N) WALKPADS
7.12 PATCH (E) ROOF OPENING TO MATCH (E)
23.01 (N) HVAC EQUIPMENT, SEE MECHANICAL
23.05 (N) REFRIGERANT PIPING THROUGH ROOF, SEE MECHANICAL
23.07 (N) DUCT, SEE MECHANICAL
23.11 (N) DUCT PENETRATION THROUGH ROOF, SEE MECHANICAL
E.01 (E) ROOF HATCH TO REMAIN
E.02 (E) COPING TO REMAIN
E.03 (E) ROOF DRAIN TO REMAIN
E.16 (E) CRICKET TO REMAIN
E.17 (E) EQUIPMENT TO REMAIN
E.19 (E) EXHAUST FAN TO REMAIN
E.21 (E) PREFINISHED METAL PANEL EQUIPMENT SCREEN TO REMAIN
E.31 (E) ROOFING TO REMAIN

GENERAL NOTES

1. ALL ITEMS SHOWN HERE ARE EXISTING TO REMAIN UNLESS NOTED OTHERWISE.
2. SEE PLUMBING, MECHANICAL AND ELECTRICAL ROOF PLANS FOR PIPE AND CONDUIT PENETRATIONS. SEE 6/A5.02, 7/A5.02, 12/A5.02 AND 13/A5.02 FOR DUCT / FLUE / VENT PENETRATION DETAILS.
3. MAINTAIN THE FIRE RATING CONTINUITY OF STRUCTURE, WALLS, FLOOR AND CEILINGS INTERRUPTED BY THE WORK OF ALL TRADES.

NORTH

0' 4' 8' 16' 32'

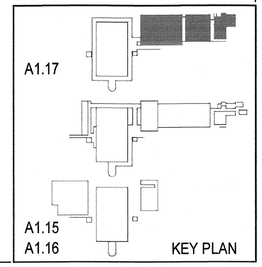

J & S CONSULTING ENGINEERS, INC.
ELECTRICAL • MECHANICAL
FIRE PROTECTION
3111 Winona Ave., #102
Burbank, Ca 91504
Tel.: (818) 841-0303
Fax: (818) 841-8531
624 Moorpark Road,
Moorpark, CA 93021
Tel.: (805) 523-1700
Fax: (805) 523-1702
www.jandsconsulting.com
E-Mail:jsmail@jandsconsulting.com
PROJECT No. 45461

AMADOR WHITTLE
ARCHITECTS, INC.
28326 AGOURA ROAD, SUITE 203
AGOURA HILLS, CA 91301
(805) 530-3938 , (818) 874-0071

VENTURA COLLEGE

4667 TELEGRAPH ROAD, VENTURA, CALIFORNIA, 93003
VENTURA COUNTY COMMUNITY COLLEGE DISTRICT
MATH & SCIENCE COMPLEX

IDENTIFICATION STAMP
DIVISION OF THE STATE ARCHITECT
APPL. NO. 03-117754
AC — FLS — SS
DATE JUL 05 2017

NO.	DATE	DESCRIPTION	BY
	12.19.16	DSA SUBMITTAL	

REVISIONS

LICENSED ARCHITECT JOHN A. AMADOR C-22205 APRIL 30, 2019 RENEWAL DATE STATE OF CALIFORNIA

DRAWN BY:	MJQ
CHECKED BY:	JAA
DATE	05.12.17
JOB NO:	14-JS VCCCD

SHEET TITLE

BUILDING 'C' DEMOLITION & NEW ROOF PLANS

SHEET

A1.17

DWG # 20 OF 82

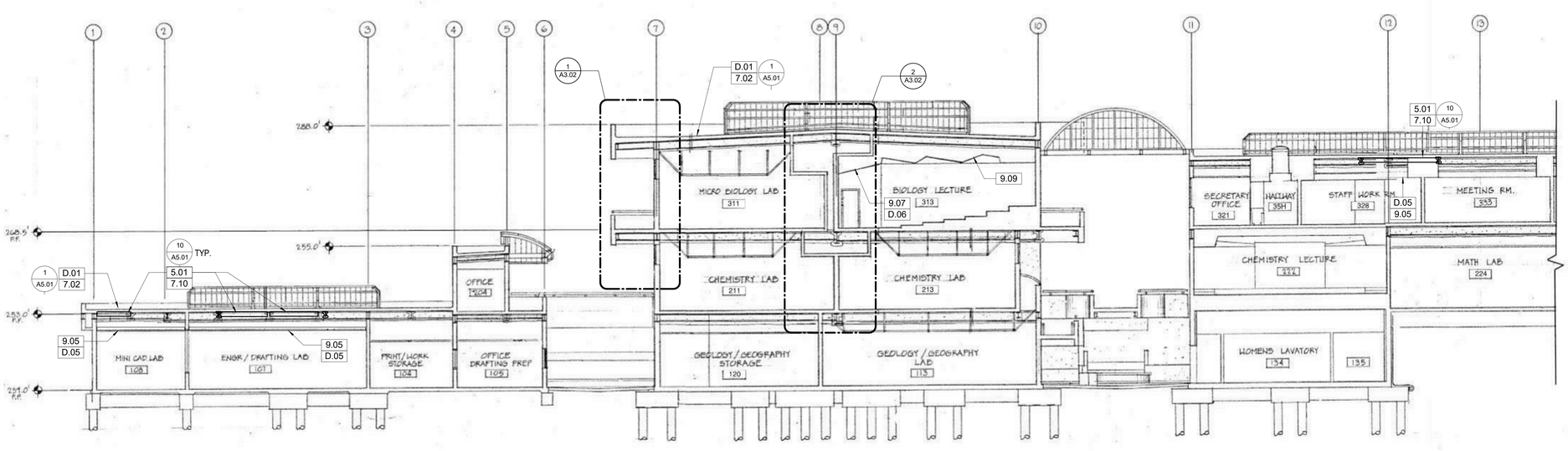

1 LONGITUDINAL SECTION - BUILDING A, B & C
1/8" = 1'-0"

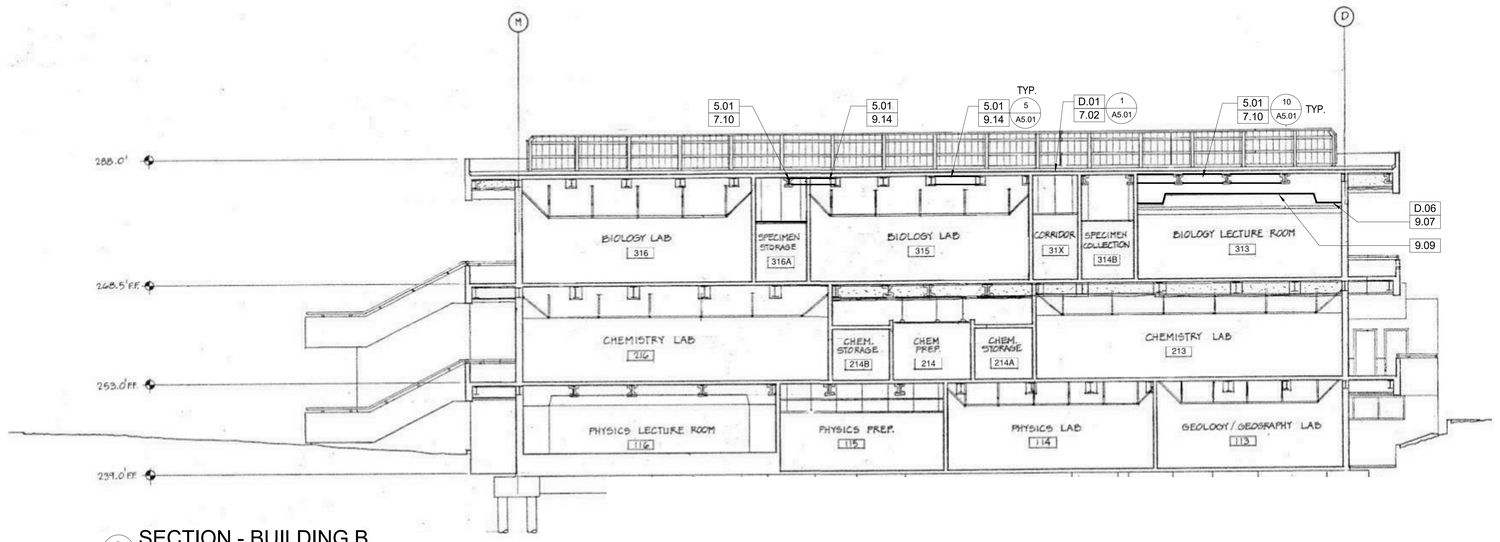

2 SECTION - BUILDING B
1/8" = 1'-0"

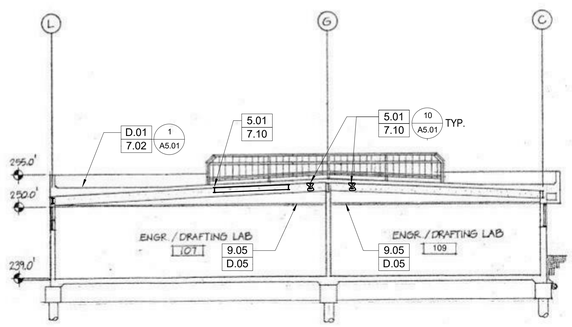

3 SECTION - BUILDING A
1/8" = 1'-0"

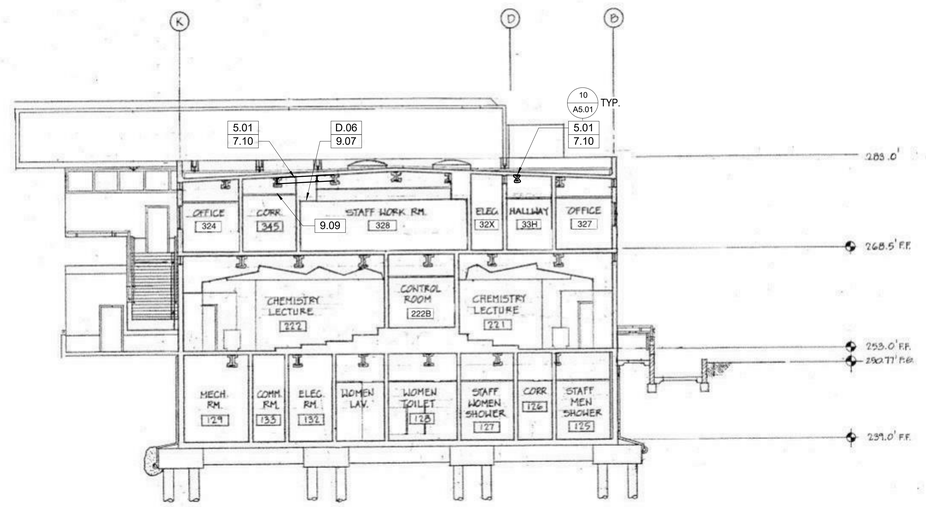

4 SECTION - BUILDING C
1/8" = 1'-0"

DEMOLITION KEYNOTES

D.01 REMOVE EXISTING BUILT-UP ROOFING AND FLASHING. CLEAN AND PREP SURFACE FOR NEW PVC ROOF AND FLASHINGS.
D.05 REMOVE ENTIRE (E) T-BAR CEILING
D.06 REMOVE PORTION (E) VENEER PLASTER SOFFIT/CEILING TO ACCESS UNDERSIDE OF ROOF

KEYNOTES

5.01 (N) STEEL BEAM REINFORCEMENT UNDER ROOF, SEE STRUCTURAL
7.02 (N) PVC MEMBRANE OVER 1/2" THICK HIGH DENSITY INSULATION (SEE SPECS)
7.10 (N) SPRAY APPLIED FIRE-PROOFING
9.05 (N) ACOUSTICAL SUSPENDED CEILING SYSTEM
9.07 PATCH AND PAINT VENEER PLASTER CEILING AND/OR SOFFIT AFTER COMPLETION OF DUCT AND ROOF UNDERSIDE WORK
9.09 REINSTALL (E) LINEAR METAL CEILING TRACK SYSTEM AFER COMPLETION OF DUCT AND ROOF UNDERSIDE WORK
9.14 (N) 5/8" TYPE 'X' GYPSUM BOARD BOX AROUND (N) STEEL BEAM

GENERAL NOTES

1. ALL ITEMS SHOWN HERE ARE EXISTING TO REMAIN UNLESS NOTED OTHERWISE.
2. FOR NEW PIPE PENETRATIONS THRU 1-HR RATED FLOOR AND WALLS, SEE DETAILS 12/A5.01 AND 16/A5.01.
4. MAINTAIN THE FIRE RATING CONTINUITY OF STRUCTURE, WALLS, FLOOR AND CEILINGS INTERRUPTED BY THE WORK OF ALL TRADES.

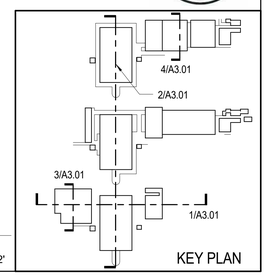

J & S CONSULTING ENGINEERS, INC.
ELECTRICAL ▫ MECHANICAL
FIRE PROTECTION
3111 Winona Ave., #102
Burbank, Ca 91504
Tel.: (818) 841-0303
Fax: (818) 841-8531
624 Moorpark Road,
Moorpark, CA 93021
Tel.: (805) 523-1700
Fax: (805) 523-1702
www.jandsconsulting.com
E-Mail:jsmail@jandsconsulting.com
PROJECT No. 45461

AMADOR WHITTLE
ARCHITECTS, INC.
28328 AGOURA ROAD, SUITE 203
AGOURA HILLS, CA 91301
(805) 530-3938 , (818) 874-0071

VENTURA COLLEGE
4667 TELEGRAPH ROAD, VENTURA, CALIFORNIA, 93003
VENTURA COUNTY COMMUNITY COLLEGE DISTRICT
MATH & SCIENCE COMPLEX

IDENTIFICATION STAMP
DIVISION OF THE STATE ARCHITECT
APPL. NO. 03-117754
AC ____ FLS ____ SS ____
DATE ____

NO.	DATE	DESCRIPTION	BY
1	08.28.18	ROOM NUMBER CHANGES	
	12.19.16	DSA SUBMITTAL	

REVISIONS

LICENSED ARCHITECT JEAN ANN MARIE WHITTLE C-22205 APPL. NO. 2018 RENEWAL DATE STATE OF CALIFORNIA

DRAWN BY:	VV
CHECKED BY:	MJQ
DATE	05.12.17
JOB NO:	14-JS VCCCD

SHEET TITLE

BUILDING SECTIONS

SHEET
A3.01
DWG # ____ OF ____

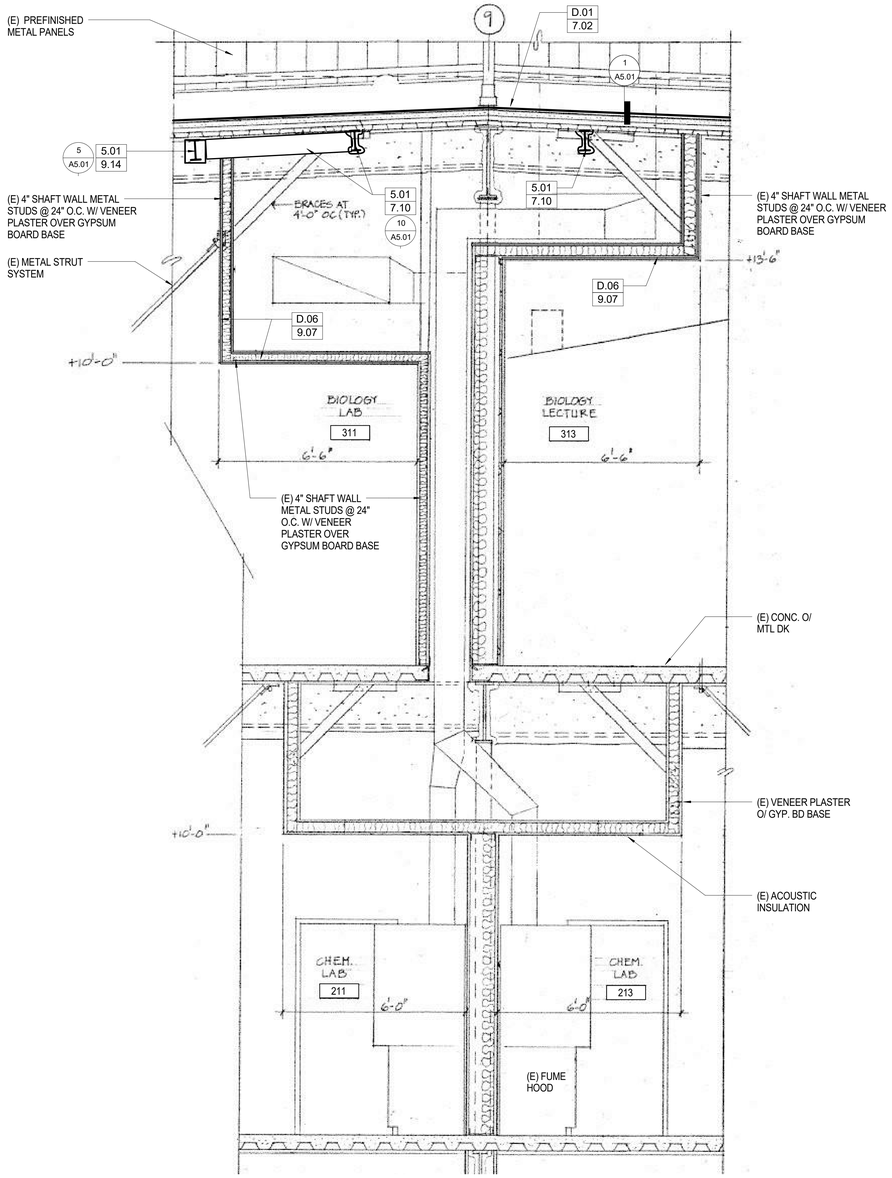

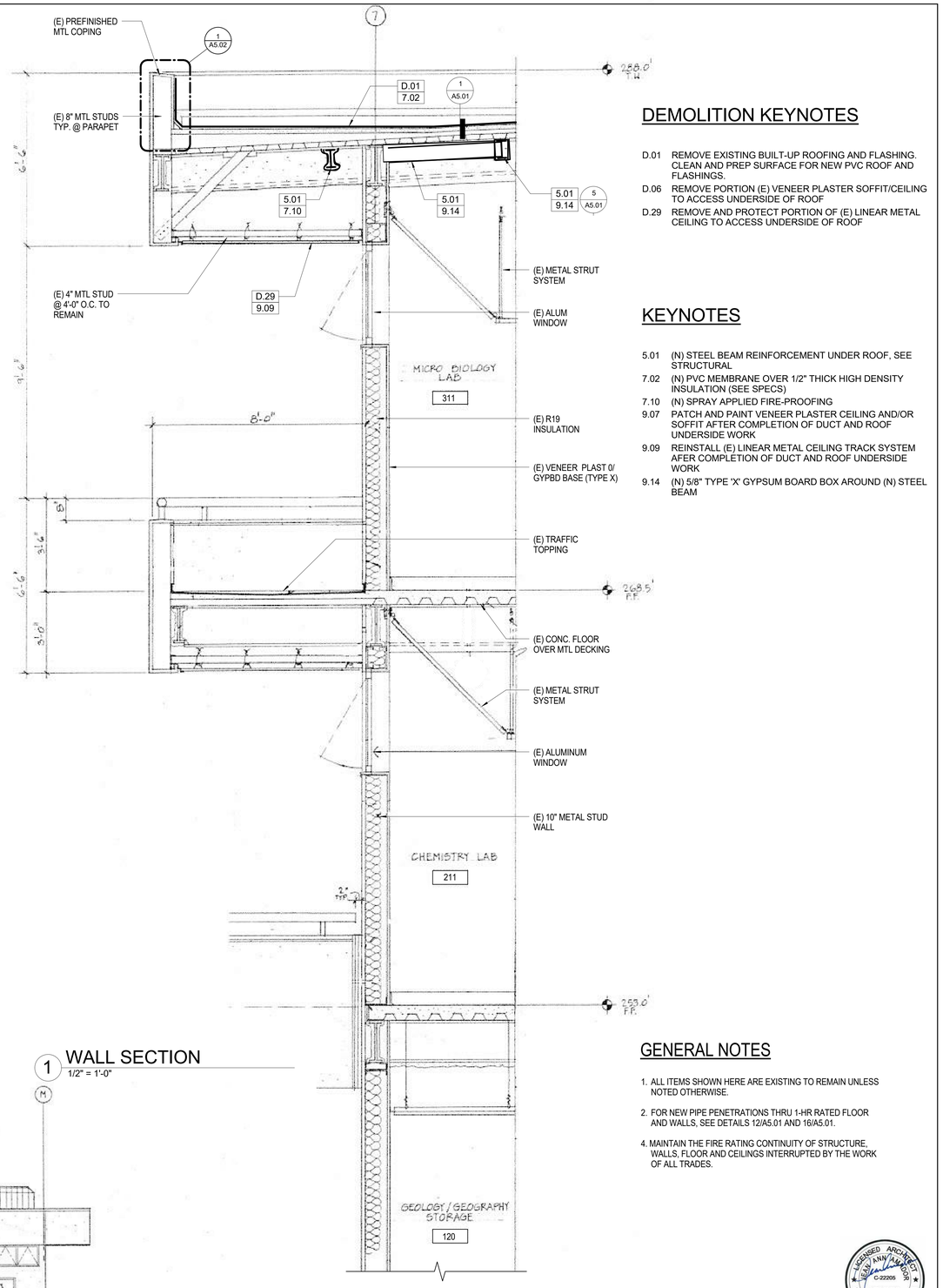

DEMOLITION KEYNOTES

D.01 REMOVE EXISTING BUILT-UP ROOFING AND FLASHING. CLEAN AND PREP SURFACE FOR NEW PVC ROOF AND FLASHINGS.

D.06 REMOVE PORTION (E) VENEER PLASTER SOFFIT/CEILING TO ACCESS UNDERSIDE OF ROOF

D.29 REMOVE AND PROTECT PORTION OF (E) LINEAR METAL CEILING TO ACCESS UNDERSIDE OF ROOF

KEYNOTES

5.01 (N) STEEL BEAM REINFORCEMENT UNDER ROOF, SEE STRUCTURAL

7.02 (N) PVC MEMBRANE OVER 1/2" THICK HIGH DENSITY INSULATION (SEE SPECS)

7.10 (N) SPRAY APPLIED FIRE-PROOFING

9.07 PATCH AND PAINT VENEER PLASTER CEILING AND/OR SOFFIT AFTER COMPLETION OF DUCT AND ROOF UNDERSIDE WORK

9.09 REINSTALL (E) LINEAR METAL CEILING TRACK SYSTEM AFER COMPLETION OF DUCT AND ROOF UNDERSIDE WORK

9.14 (N) 5/8" TYPE 'X' GYPSUM BOARD BOX AROUND (N) STEEL BEAM

GENERAL NOTES

1. ALL ITEMS SHOWN HERE ARE EXISTING TO REMAIN UNLESS NOTED OTHERWISE.
2. FOR NEW PIPE PENETRATIONS THRU 1-HR RATED FLOOR AND WALLS, SEE DETAILS 12/A5.01 AND 16/A5.01.
4. MAINTAIN THE FIRE RATING CONTINUITY OF STRUCTURE, WALLS, FLOOR AND CEILINGS INTERRUPTED BY THE WORK OF ALL TRADES.

2 WALL SECTION
1/2" = 1'-0"

1 WALL SECTION
1/2" = 1'-0"

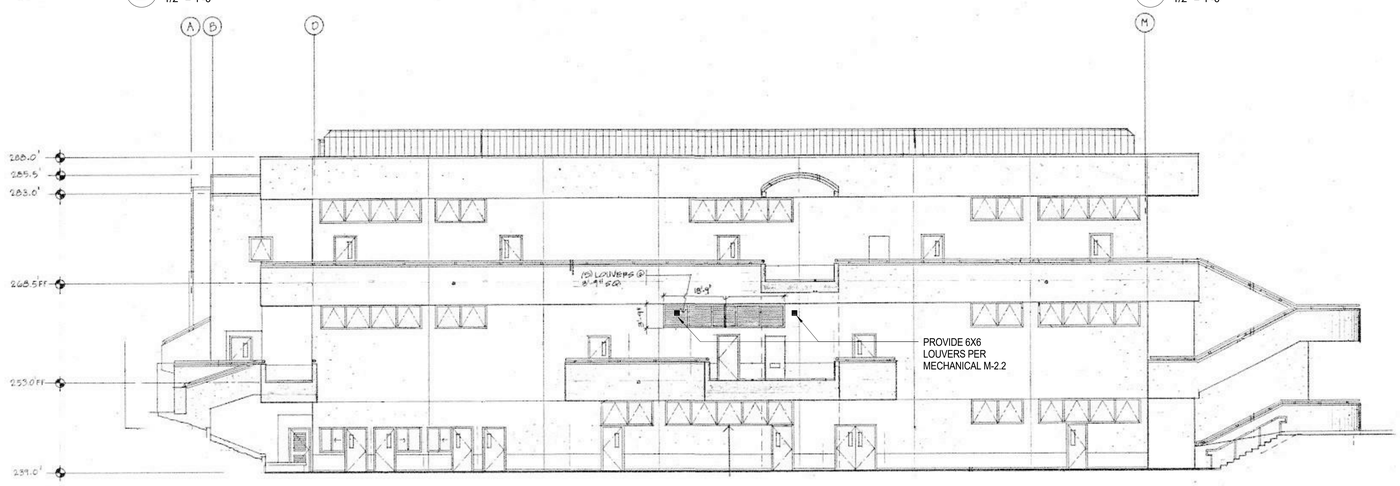

3 SOUTH COURT ELEVATION
1/8" = 1'-0"

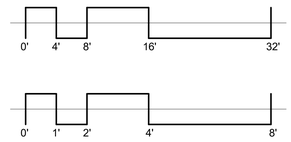

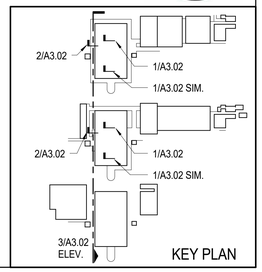

J & S CONSULTING ENGINEERS, INC.
ELECTRICAL ▫ MECHANICAL
FIRE PROTECTION
3111 Winona Ave., #102
Burbank, Ca 91504
Tel.: (818) 841-0303
Fax: (818) 841-8531
624 Moorpark Road,
Moorpark, CA 93021
Tel.: (805) 523-1700
Fax: (805) 523-1702
www.jandsconsulting.com
E-Mail:jsmail@jandsconsulting.com
PROJECT No. 45461

AMADOR WHITTLE
ARCHITECTS, INC.
28328 AGOURA ROAD, SUITE 203
AGOURA HILLS, CA 91301
(805) 530-3938 , (818) 874-0071

VENTURA COLLEGE
4667 TELEGRAPH ROAD, VENTURA, CALIFORNIA, 93003
VENTURA COUNTY COMMUNITY COLLEGE DISTRICT
MATH & SCIENCE COMPLEX

IDENTIFICATION STAMP
DIVISION OF THE STATE ARCHITECT
APPL. NO. 03-117754
AC _____ FLS _____ SS _____
DATE _____

NO.	DATE	DESCRIPTION	BY
		REVISIONS	
1	08.28.18	ROOM NUMBER CHANGES	
	12.19.16	DSA SUBMITTAL	

LICENSED ARCHITECT JEAN ANN WHITTLE C-22209 APRIL 30, 2019 RENEWAL DATE STATE OF CALIFORNIA

DRAWN BY:	VV
CHECKED BY:	MJQ
DATE	05.12.17
JOB NO:	14-JS VCCCD

SHEET TITLE

WALL SECTIONS & SOUTH ELEVATION OF BLDG 'B'

SHEET

A3.02

DWG # ____ OF ____

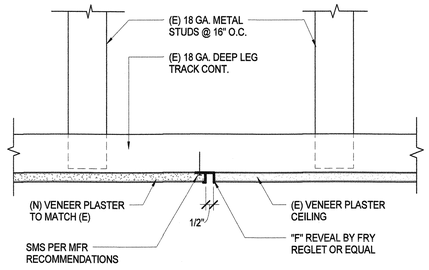

13 REVEAL @ CEILING DETAIL
3" = 1'-0"

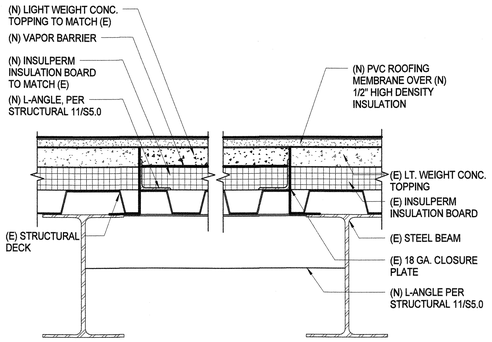

9 ROOF PENETRATION INFILL
3" = 1'-0"

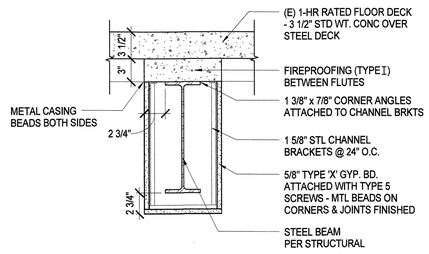

5 STEEL BEAM FIRE PROTECTION
1 1/2" = 1'-0"

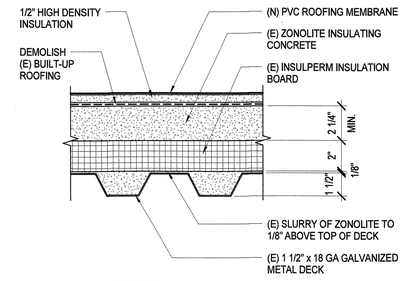

U.L. #P919 (1 HR RATED)

1 ROOF SYSTEM
3" = 1'-0"

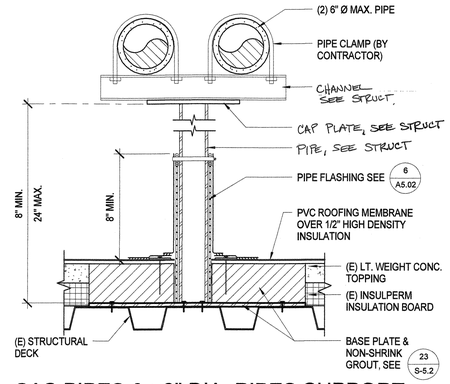

14 GAS PIPES & >3" DIA. PIPES SUPPORT
3" = 1'-0"

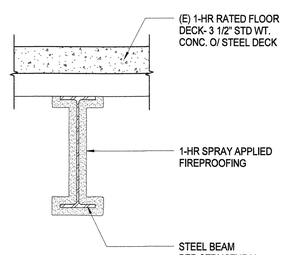

10 STL. BM. SPRAY APPLIED FIRE PROOFING
1 1/2" = 1'-0"

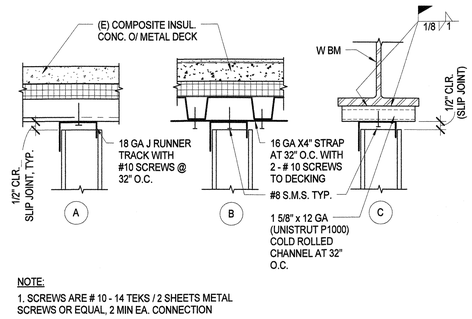

NOTE:
1. SCREWS ARE # 10 - 14 TEKS / 2 SHEETS METAL SCREWS OR EQUAL, 2 MIN EA. CONNECTION

6 NON-BEARING SHAFT WALL CONNECTION
1 1/2" = 1'-0"

3 GUARDRAIL EDGE PROTECTION
3" = 1'-0"

System No. F-C-1002
September 03, 2004
(Formerly System No. 169)
F Ratings – 1 and 2 Hr (See Item 1)
T Rating – 1 Hr

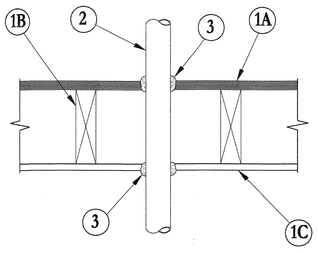

1. **Floor-Ceiling Assembly** – The 1 or 2 hr fire-rated wood joist floor-ceiling assembly shall be constructed of the materials and in the manner specified in the UL Fire Resistance Directory. The 1 hr fire rated assembly shall be constructed as specified in Design No. L501, L512 or L537. The 2 hr fire rated assembly shall be constructed as specified in Design No. L505, L511 or L536. **The F Rating of the firestop system is equal to the fire rating of the floor-ceiling assembly**. The general construction details of the floor-ceiling assembly are summarized below:
   - A. **Flooring System** – Lumber or plywood subfloor with finish floor of lumber, plywood or **Floor Topping Mixture*** as specified in the individual Floor-Ceiling Design. Max diam of opening is 1 in. larger than outside diam of penetrant.
   - B. **Wood Joists** – Nom 2 by 10 in. lumber joists spaced 16 in. O.C. with nom 1 by 3 in. lumber bridging and with ends firestopped.
   - C. **Furring Channels** (Not Shown) – Resilient galv steel furring channels installed perpendicular to wood joists between first and second layers of wallboard (Item 1D) in 2 hr fire rated assembly. Furring channels spaced max 24 in. O.C.
   - D. **Gypsum Board*** – Nom 4 ft wide by 5/8 in. thick as specified in the individual Floor-Ceiling Design. First layer of wallboard nailed to wood joists. Second layer of wallboard (2 hr fire rated assembly only) screw-attached to furring channels. Max diam of opening is 1 in. larger than outside diam of penetrant.

1.1 **Chase Wall** (Optional, not shown) – The through penetrants (Item No. 2) may be routed through a fire-rated single, double or staggered wood stud/gypsum wallboard chase wall having a fire rating consistent with that of the floor-ceiling assembly. The chase wall shall be constructed of the materials and in the manner specified in the individual U300 Series Wall and Partition Designs in the UL Fire Resistance Directory and shall include the following construction features:
   - A. **Studs** – Nom 2 by 6 in. or double nom 2 by 4 in. lumber studs.
   - B. **Sole Plate** – Nom 2 by 6 in. or parallel 2 by 4 in. lumber plates, tightly butted.
   - C. **Top Plate** – The double top plate shall consist of two nom 2 by 6 in. or two sets of parallel 2 by 4 in. lumber plates, tightly butted. Max diam of opening is 5 in..
   - D. **Gypsum Board*** – Thickness, type, number of layers and fasteners shall be as specified in individual Wall and Partition Design.

2. **Through Penetrants** – One metallic pipe, conduit or tubing to be installed either concentrically or eccentrically within the firestop system. The annular space between pipe, conduit or tubing and periphery of opening shall be min 0 in. (point contact) to max 1 in. Pipe, conduit or tubing to be rigidly supported on both sides of floor assembly. The following types and sized of metallic pipe, conduit or tubing may be used:
   - A. **Steel Pipe** – Nom 10 in. diam (or smaller) Schedule 40 (or heavier) steel pipe.
   - B. **Iron Pipe** – Nom 10 in. diam (or smaller) cast or ductile iron pipe.
   - C. **Conduit** – Nom 6 in. diam (or smaller) steel conduit, or nom 4 in. (or smaller) steel electrical metallic tubing.
   - D. **Copper Tubing** – Nom 4 in. diam (or smaller) Type L (or heavier) copper tubing.
   - E. **Copper Pipe** – Nom 4 in. diam (or smaller) Regular (or heavier) copper pipe.

3. **Fill, Void or Cavity Material*** – **Caulk or Sealant** – Min 3/4 in. thickness of fill material applied within the annulus, flush with top surface of floor or sole plate. Min 5/8 in. or 1-1/4 in. thickness of fill material, for 1 and 2 hr rated assemblies, respectively, applied within the annulus, flush with bottom surface of ceiling or top plate. An additional min 1/4 in. crown of fill material applied to perimeter of penetrant at its egress from the top of flooring and underside of ceiling or from top of sole plate and underside of top plate.

   3M COMPANY – CP 25WB+ caulk or FB-3000 WT sealant.

*Bearing the UL Classification Mark

16 PIPE THRU 1 & 2 HR FIRE-RATED FLOOR
1 1/2" = 1'-0"

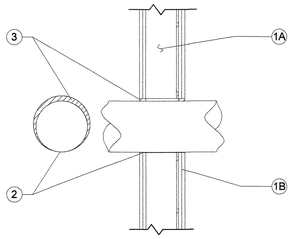

1. WALL ASSEMBLY - THE 1 OR 2 HOUR RATED WALLBOARD WALL ASSEMBLY SHALL BE CONSTRUCTED OF THE MATERIALS AND IN THE MANNER SPECIFIED IN THE INDIVIDUAL U300 OR U400 SERIES WALL AND PARTITION DESIGNS IN THE UL FIRE RESISTANCE DIRECTORY AND SHALL INCLUDE THE FOLLOWING CONSTRUCTION FEATURES.

A. STUDS - WALL FRAMING MAY CONSIST OF EITHER WOOD STUDS OF STEEL CHANNEL STUDS. WOOD STUDS TO CONSIST OF 2X4 LUMBER SPACED 16" O.C.. STEEL STUDS TO BE MINIMUM 2 1/2" WIDE AND SPACED 24" O.C..

B. GYPSUM BOARD* - FOR ASSEMBLY, ONE LAYER OF MIN. 5/8" THICK WALLBOARD AS REQUIRED IN THE INDIVIDUAL WALL AND PARTITION DESIGN. FOR 2 HR. ASSEMBLY, TWO LAYERS OF MIN. 5/8" THICK WALLBOARD AS REQUIRED IN THE INDIVIDUAL WALL AND PARTITION DESIGN. MAX. DIA. OF OPENING IS 14 1/2" FOR WOOD STUD WALLS AND 21 3/4" FOR STEEL STUD WALLS.

THE HOURLY F AND T RATINGS OF THE FIRESTOP SYSTEM IS EQUAL TO THE HOURLY FIRE RATING OF THE WALL ASSEMBLY IN WHICH IT IS INSTALLED.

2. THROUGH PENETRANT - GALV. STEEL DUCT TO BE INSTALLED CONCENTRICALLY OR ECCENTRICALLY WITHIN THE FIRESTOP SYSTEM. THE ANNULAR SPACE BETWEEN THE DUCT AND PERIPHERY OF OPENING SHALL BE 0" (POINT CONTACT) AND MAX. 1 1/2" DUCT TO BE RIGIDLY SUPPORTED ON BOTH SIDES OF WALL ASSEMBLY.

A. SPIRAL WOUND HVAC DUCT - NOMINAL 20" DUCT DIA, (OR SMALLER) NO 24 MSG (OR HEAVIER GALV. STEEL SPIRAL WOUND DUCT.

B. SHEET METAL DUCT - NOM. 12" DIA. (OR SMALLER) NO 28 MSG (OR HEAVIER) GALV. SHEET STEEL DUCT.

3. FILL, VOID OR CAVITY MATERIAL* - SEALANT - MIN 5/8" AND 1 1/2" THICKNESS OF FILL MATERIAL APPLIED WITHIN ANNULUS, FLUSH WITH BOTH SURFACES OF WALL ASSEMBLY FOR 1 OR 2 HOUR RATED WALLS, RESPECTIVELY. AT THE POINT CONTACT LOCATION BETWEEN DUCT AND WALLBOARD, A MINIMUM 1/2" DIA. BEAD OF SEALANT SHALL BE APPLIED AT THE WALLBOARD/DUCT INTERFACE ON BOTH SURFACES OF WALL ASSEMBLY.

* 3M PRODUCT CP25WB BEARING THE UL CLASSIFICATION MARK.

12 PIPE THRU 1 &2 HR FIRE-RATED WALL
1" = 1'-0"

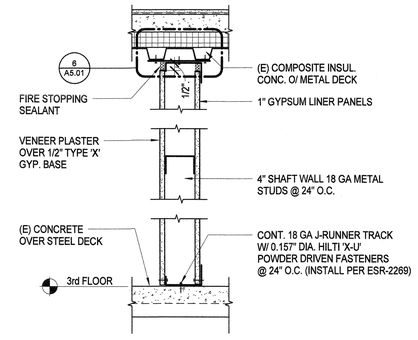

UL # U469 (1-HR RATING)

7 1-HR RATED SHAFT WALL (NON-BEARING)
1 1/2" = 1'-0"

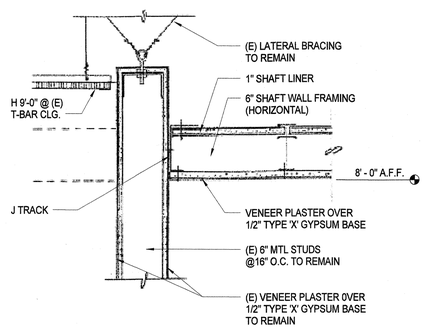

8 1 HOUR WALL & CEILING
1 1/2" = 1'-0"

J & S CONSULTING ENGINEERS, INC.
ELECTRICAL ◦ MECHANICAL
FIRE PROTECTION
3111 Winona Ave., #102
Burbank, Ca 91504
Tel.: (818) 841-0303
Fax: (818) 841-8531
624 Moorpark Road,
Moorpark, CA 93021
Tel.: (805) 523-1700
Fax: (805) 523-1702
www.jandsconsulting.com
E-Mail:jsmail@jandsconsulting.com
PROJECT No. 45461

AMADOR WHITTLE
ARCHITECTS, INC.
28328 AGOURA ROAD, SUITE 203
AGOURA HILLS, CA 91301
(805) 530-3938 , (818) 874-0071

VENTURA COLLEGE
4667 TELEGRAPH ROAD, VENTURA, CALIFORNIA, 93003
VENTURA COUNTY COMMUNITY COLLEGE DISTRICT
MATH & SCIENCE COMPLEX

IDENTIFICATION STAMP
DIVISION OF THE STATE ARCHITECT
APPL. NO. 03-117754
AC ___ FLS ___ SS
DATE JUL 05 2017

NO.	DATE	DESCRIPTION	BY
	12.19.16	DSA SUBMITTAL	

REVISIONS

LICENSED ARCHITECT KEVIN AMADOR C-22205 APRIL 30, 2019 RENEWAL DATE STATE OF CALIFORNIA

DRAWN BY:	VV
CHECKED BY:	MJQ
DATE	05.12.17
JOB NO:	14-JS VCCCD

SHEET TITLE

INTERIOR AND ROOF DETAILS

SHEET

A5.01

DWG # 23 OF 82

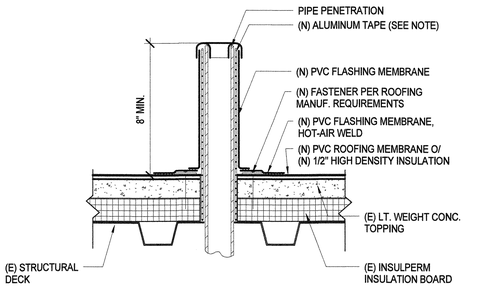

NOTES:

1. ALUMINUM TAPE IS REQUIRED IF EXISTING PENETRATION IS CONTAMINATED.
2. VAPOR BARRIER SHALL BE SEALED AT EDGES.

13 VENT STACK FLASHING
3" = 1'-0"

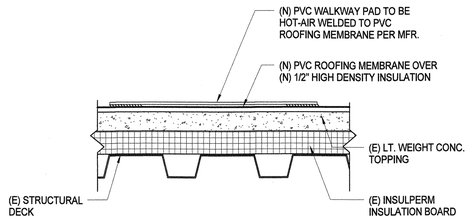

9 PVC WALKWAY PAD
3" = 1'-0"

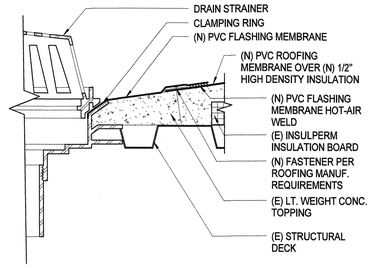

NOTES:

1. EXISTING DRAIN BOWL, CLAMPING RING AND DRAIN ACCESSORIES ARE TO BE CLEANED FREE OF ALL CONTAMINATES.
2. VAPOR BARRIER SHALL BE SEALED AT EDGES.

5 CLAMPING RING DRAIN
3" = 1'-0"

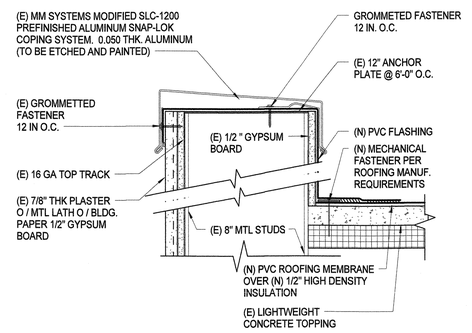

1 PARAPET WALL W/ METAL COPING CAP
3" = 1'-0"

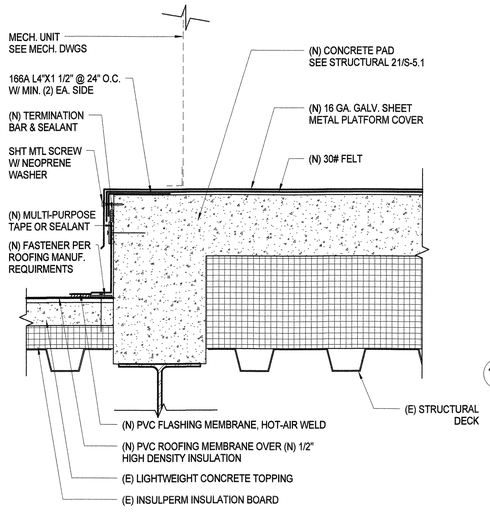

14 CONCRETE ROOF PLATFORM
3" = 1'-0"

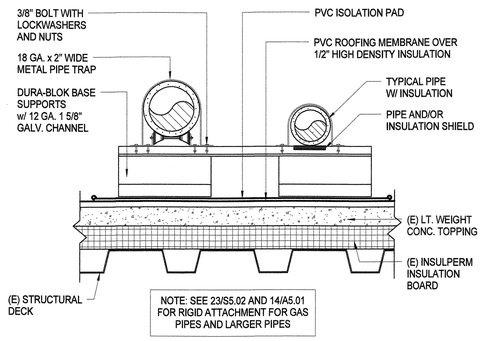

10 3" DIA. MAX. PIPE SUPPORT (NON-GAS PIPES ONLY)
3" = 1'-0"

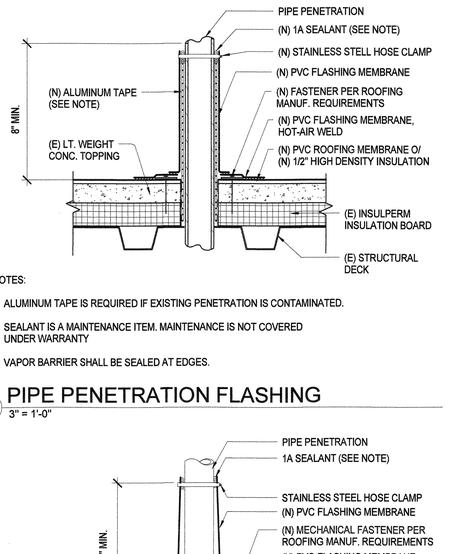

NOTES:

1. ALUMINUM TAPE IS REQUIRED IF EXISTING PENETRATION IS CONTAMINATED.
2. SEALANT IS A MAINTENANCE ITEM. MAINTENANCE IS NOT COVERED UNDER WARRANTY
3. VAPOR BARRIER SHALL BE SEALED AT EDGES.

6 PIPE PENETRATION FLASHING
3" = 1'-0"

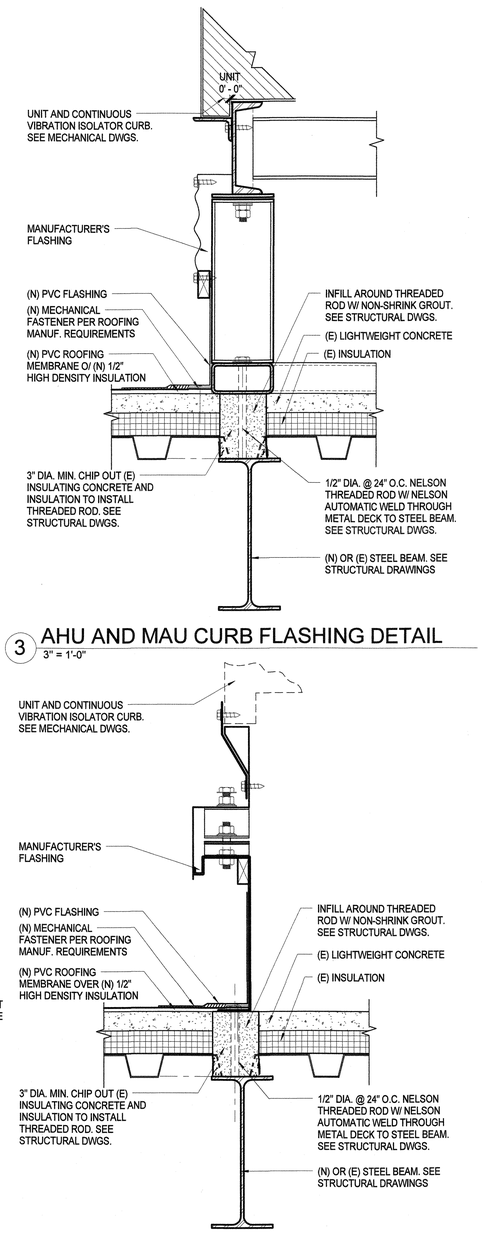

3 AHU AND MAU CURB FLASHING DETAIL
3" = 1'-0"

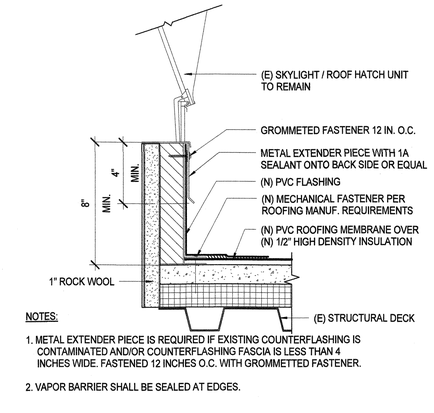

NOTES:

1. METAL EXTENDER PIECE IS REQUIRED IF EXISTING COUNTERFLASHING IS CONTAMINATED AND/OR COUNTERFLASHING FASCIA IS LESS THAN 4 INCHES WIDE. FASTENED 12 INCHES O.C. WITH GROMMETTED FASTENER.
2. VAPOR BARRIER SHALL BE SEALED AT EDGES.

16 SKYLIGHT / ROOF HATCH FLASHING
3" = 1'-0"

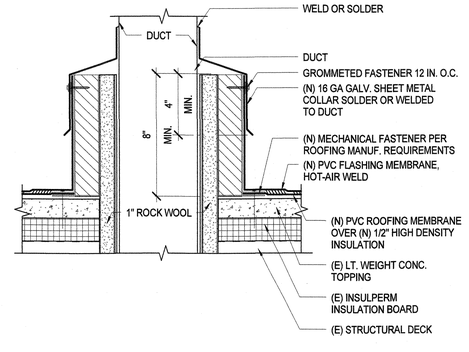

11 ROOF/WALL FLASHING
3" = 1'-0"

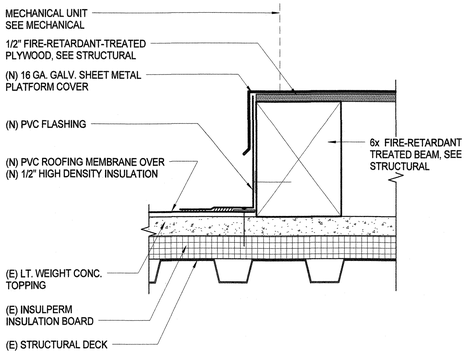

7 CONE FLASHING AT PENETRATION
3" = 1'-0"

12 DUCT THRU ROOF CURB
3" = 1'-0"

8 CONDENSING UNIT CURB
3" = 1'-0"

4 ROOF RTU UNIT CURB FLASHING DETAIL
3" = 1'-0"

J & S CONSULTING ENGINEERS, INC.
ELECTRICAL ◦ MECHANICAL
FIRE PROTECTION
3111 Winona Ave., #102
Burbank, Ca 91504
Tel.: (818) 841-0303
Fax: (818) 841-8531
624 Moorpark Road,
Moorpark, CA 93021
Tel.: (805) 523-1700
Fax: (805) 523-1702
www.jandsconsulting.com
E-Mail:jsmail@jandsconsulting.com
PROJECT No. 45461

AMADOR WHITTLE
ARCHITECTS, INC.
28328 AGOURA ROAD, SUITE 203
AGOURA HILLS, CA 91301
(805) 530-3938 , (818) 874-0071

VENTURA COLLEGE
4667 TELEGRAPH ROAD, VENTURA, CALIFORNIA, 93003
VENTURA COUNTY COMMUNITY COLLEGE DISTRICT
MATH & SCIENCE COMPLEX

IDENTIFICATION STAMP
DIVISION OF THE STATE ARCHITECT
APPL. NO. 03-117754
AC ___ FLS ___ SS
DATE JUL 05 2017

NO.	DATE	DESCRIPTION	BY
	12.19.16	DSA SUBMITTAL	
REVISIONS			

LICENSED ARCHITECT
JEANNE ANN AMADOR
C-22205
APPROVAL 30, 2019
RENEWAL DATE
STATE OF CALIFORNIA

DRAWN BY:	JTS
CHECKED BY:	JAA
DATE	05.12.17
JOB NO:	14-JS VCCCD

SHEET TITLE

ROOF DETAILS

SHEET

A5.02

DWG# 18 OF 81

CEILING NOTES (Basis Document IR 25-2.13 rev 02-10-16):

1. CEILING SYSTEM GENERAL NOTES:

1.01 Ceiling system components shall comply with ASTM C635-07 and section 5.1 of ASTM E580-10a.

1.02 The ceiling grid system must be rated heavy duty as defined by ASTM C635-08.

1.03 Ceiling systems. The following ceiling system(s) is/are part of the scope of this project:

HEAVY DUTY NON-RATED GRID SYSTEM	ARMSTRONG PRELUDE PLUS XL	CHICAGO METALLIC 1200 SEISMIC SERIES HEAVY DUTY	USG DONN DXLA
MAIN RUNNER	HD8201	270	DXLA26
CROSS RUNNER (2x4 GRID)	XL8223	1252	DXLA216
CROSS RUNNER	XL8341	1254	DXLA424

1.04 Seismic wall Clip - NOT USED

1.05 Ceiling panels shall not support any light fixtures, air terminals or devices.

1.06 For ceiling installations utilizing acoustical tile panels of mineral or glass fiber, it is not mandatory to provide 3/4" clearance between the acoustical tile panels and the wall on the sides of the ceiling which are free to slip. For all other ceiling panel types, provide 3/4" clearance between the ceiling panel and the wall on the sides of the ceiling free slip.

2. MATERIALS:

2.01 Ceiling wire shall be Class 1 zinc coated (galvanized) carbon steel conforming to ASTM A641-09a. Wire shall be #12 gage (0.106" diameter) with soft temper and minimum tensile strength = 70 ksi.

2.02 Galvanized sheet steel (including that used for metal stud and track compression struts/post) shall conform to ASTM A653-11, or other equivalent sheet steel listed in section A2.1 of the North American Specification for the Design of Cold-Formed Steel Structural Members 2007, including supplement 2 dated 2010 (AISI S100-07/S2-10).
Material 43 mil (18 gage) and lighter shall have minimum yield strength of 33 ksi.
Material 54 mil (16 gage) and heavier shall have minimum yield strength of 50 ksi.

2.03 Electrical metallic tube (EMT) shall be ANSI C80.3/UL 797 carbon steel with G90 galvanizing. EMT shall have minimum yield strength (Fy) of 30 ksi and minimum ultimate strength (Fu) of 48 ksi.

3. ATTACHMENT OF HANGER AND BRACING WIRES:

3.01 Separate all ceiling hanger and bracing wires at least six (6) inches from all unbraced ducts, pipes, conduit, etc.

3.02 Hanger and bracing wires shall not attach to or bend around obstructions including but not limited to: piping, ductwork, conduit and equipment.

3.03 Hanger wires that are more than one (horizontal) in six (vertical) out of plumb shall have counter-sloping wires.

3.04 Slack safety wires shall be considered hanger wires for installation and testing requirements.

3.05 Hanger and bracing wire anchorage to the structure shall be installed in such a manner that the direction of the anchorage aligns closely with the direction of the wire. (e.g. bracing wire ceiling clips must be bent as shown in the details and rotated as required to align closely with the direction of the wire, screw eyes in wood must be installed so they align closely with the direction of the wire, etc.)

4. FASTENERS AND WELDING:

4.01 Sheet metal screws shall comply with ASTM C1513-10, ASME B18.6.4-89 (R2005). Penetration of screws through joined material shall not be less than three exposed threads.

4.02 Expansion anchors shall be: HILTI KB-T2 (ICC-1917)

4.03 Power-Actuated Fasteners shall be: HILTI X-U (ICC-2269)

4.04 If not otherwise specified in the evaluation report, power-actuated fasteners installed in steel shall be installed so the entire pointed end of the fastener is driven through the steel member.

4.05 Power-actuated fasteners in concrete are not permitted for bracing wires.

4.06 Concrete reinforcement and prestressing tendons shall be located by non-destructive means prior to installing post - installed anchor.

4.07 Welding shall be in accordance with AWS D1.3 using E60XX series electrodes.

5. TESTING: All field testing must be performed in the presence of the project inspector.

5.01 Post- installed anchors in concrete used to support hanger wires shall be tested at a frequency of 10 percent. Power actuated fasteners in concrete shall be field tested for 200 lbs. in tension. All other post-installed anchors in concrete shall be tested in accordance with CBC Section 1913A.7.

5.02 Post-installed anchors in concrete used to attach bracing wires shall be tested at a frequency of 50 percent in accordance with CBC Section 1913A.7.

6. LIGHT FIXTURES:

6.01 All light fixtures shall be positively attached to the ceiling suspension systems by mechanical means to resist a horizontal force equal to weight of the fixture. A minimum of two screws or approved fasteners are required at each light fixture, per ASTM E580, Section 5.3.1.

6.02 Surface-mounted light fixtures shall be attached to the main runner with at least two positive clamping devices. The clamping device shall completely surround the supporting ceiling runner and be made of steel with a minimum thickness of #14 gage. Rotational spring catches do not comply. A #12 gage slack safety wire shall be connected from each clamping device to the structure above . Provide additional supports when light fixtures are eight (8) feet or longer or exceed 56 lb. Maximum spacing between supports shall not exceed eight (8) feet.

6.03 Light fixtures weighting less than or equal to 10 lb. shall have a minimum of one (1) #12 gage slack safety wire connected from the fixture housing to the structure above.

6.04 Light fixtures weighting less than or equal to 10 lb. shall have a minimum of one (1) #12 gage slack safety wire connected from the fixture housing to the structure above.

6.05 Light fixtures weighting greater than 10 lb. but less than or equal to 56lbs. may be supported directly on the ceiling runners, but they shall have a minimum of two (2) #12 gage slack safety wires connected from the fixture housing at diagonal corners to the structure above.

Exception: All light fixtures greater then two by four feet weighing less than 56 lbs. shall have a #12 gage slack safety wire at each corner.

6.06 All light fixtures weighting greater than 56 lb. shall be independently supported by not less than four (4) taut #12 gage hanger wires (one at each corner) attached from the fixture housing to the structure above or other approved hangers. The four (4) taut #12 gage wires or other approved hangers, including their attachment to the structure above, shall be capable of supporting four (4) times the weight of the fixture.

7. SERVICES WITHIN THE CEILING

7.01 All flexible sprinkler hose fitting mounting brackets, ceiling-mounted air terminals or other services shall be positively attached to the ceiling suspension systems by mechanical means. Screws or approved fasteners are required. A minimum of two attachments are required at each component.

7.02 Ceiling- mounted air terminals or other services weighing less than or equal to 20 lb. shall have one (1) #12 gage slack safety wire attached from the terminal or service to the structure above.

7.03 Flexible sprinkler hose fittings, ceiling-mounted air terminals or other services weighing more than 20 lb. but less than or equal to 56 lb. shall have two (2) #12 gage slack safety wires (at diagonal corners) connected from the terminal or service to the structure above.

7.04 Flexible sprinkler hose fittings, ceiling-mounted air terminals or other services weighing more than 56 lb. shall be supported directly from the structure above by not less than four (4) taut #12 gage hanger wires attached from the terminal or service to the structure above or other approved hangers.

8. OTHER DEVICES WITHIN THE CEILING:

8.01 All lightweight miscellaneous devices, suck as strobe lights, occupancy sensors, speakers, exit signs, etc., shall be attached to the ceiling grid. In addition, devices weighing more than 10 lbs. shall have a #12 gage slack safety wire anchored to the structure above. Devices weighing more than 20 lb. shall be supported independently from the structure above.

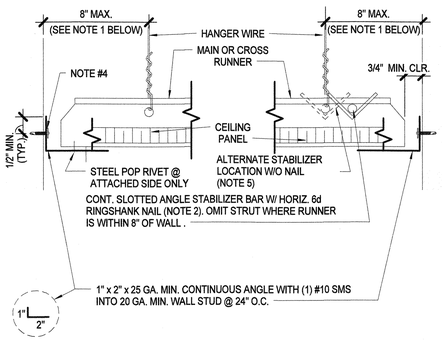

ATTACHED JOINT

FREE JOINT

NOTES:

1. PROVIDE #12 GAGE HANGER WIRES AT THE ENDS OF ALL MAIN AND CROSS RUNNERS WITHIN EIGHT (8) INCHES OF THE SUPPORT OR WITHIN ONE-FOURTH (1/4) OF THE LENGTH OF THE END TEE, WHICHEVER IS LESS, FOR THE PERIMETER OF THE CEILING AREA. PERIMETER WIRES ARE NOT REQUIRED WHEN THE LENGTH OF THE END TEE IS EIGHT (8) INCHES OR LESS.
2. NAILS AT ENDS OF HORIZONTAL STABILIZERS ARE TO BE PLACED WITH NAIL HEAD TOWARD CENTER LINE OF SPAN OF STRUT.
3. STABILIZER BAR MAY BE SLOTTED APPROVED ANGLES OR CHANNELS WITH "DIAMOND POINTS" OF SPRING STEEL WHICH SNAP TIGHT TO PREVENT MOVEMENT OF STRUT.
4. (1) #10 SMS TO 20 GA. MIN. WALL STUD @ 24" O.C.

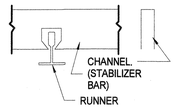

APPROVED STABILIZER

(SEE NOTE 3)

6 CEILING PERIMETER
3" = 1'-0"

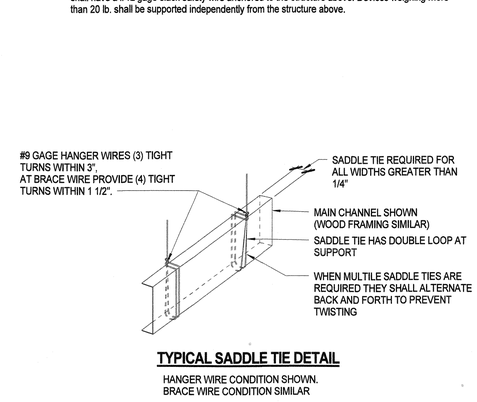

TYPICAL SADDLE TIE DETAIL

HANGER WIRE CONDITION SHOWN.
BRACE WIRE CONDITION SIMILAR

11 TYPICAL SADDLE TIE DETAIL
NTS

NOTES :

1. BEAM FLANGE THICKNESS SHALL NOT BE LESS THAN 3/16".
2. RDP IN RESPONSIBLE CHARGE, IOR AND CONTRACTOR SHALL VERIFY THAT NO PAF IS INSTALLED IN THE PROTECTED ZONE OF ANY STEEL MEMBER. SEE ANSI/AISC 341-10
3. REFER TO 1/A5.04 FOR ADDITIONAL DETAILS

HANGER WIRE

7 HANGER WIRE CONN. TO STRUCT. STEEL
1 1/2" = 1'-0"

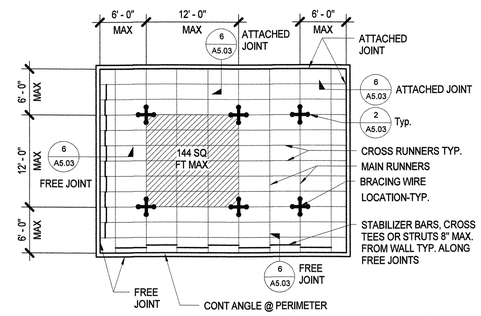

NOTE:
BRACING WIRES AND COMP. STRUT SHALL OCCUR AT EVERY 144 SQ. FT. MAX. IN ROOMS OVER 144 SQ. FT.

1 TYPICAL CEILING PLAN
1/8" = 1'-0"

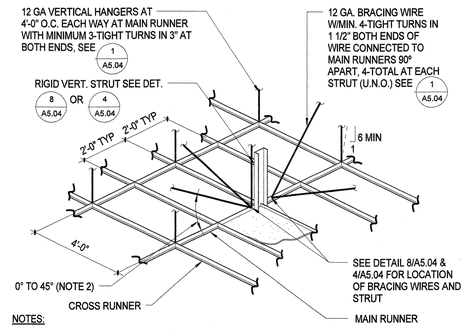

NOTES:

1. STRUTS SHALL NOT REPLACE HANGER WIRES.
2. THE MINIMUM ACCEPTABLE ANGLE IS DETERMINED SUCH THAT THE WIRES DO NOT INTERFERE WITH THE RUNNERS, LIGHT FIXTURES, ETC. AND REMAIN STRAIGHT AND UNOBSTRUCTED.

2 SUSPENDED CEILING BRACING ASSEMBLY
3" = 1'-0"

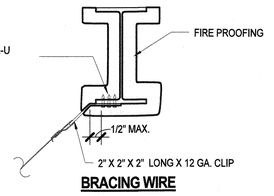

BRACING WIRE

NOTES :

1. BEAM FLANGE THICKNESS SHALL NOT BE LESS THAN 3/16".
2. RDP IN RESPONSIBLE CHARGE, IOR, AND CONTRACTOR SHALL VERIFY THAT NO PAF IS INSTALLED IN THE PROTECTED ZONE OF ANY STEEL MEMBER. SEE ANSI/AISC 341-10
3. REFER TO 1/A5.04 FOR ADDITIONAL DETAILS

3 BRACING WIRE CONN. TO STRUCT. STEEL
1 1/2" = 1'-0"

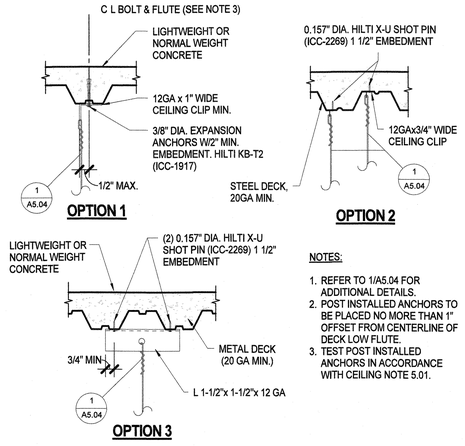

NOTES:

1. REFER TO 1/A5.04 FOR ADDITIONAL DETAILS.
2. POST INSTALLED ANCHORS TO BE PLACED NO MORE THAN 1" OFFSET FROM CENTERLINE OF DECK LOW FLUTE.
3. TEST POST INSTALLED ANCHORS IN ACCORDANCE WITH CEILING NOTE 5.01.

8 HANGER W. CONN. TO CONC./MET. DECK
1 : 10

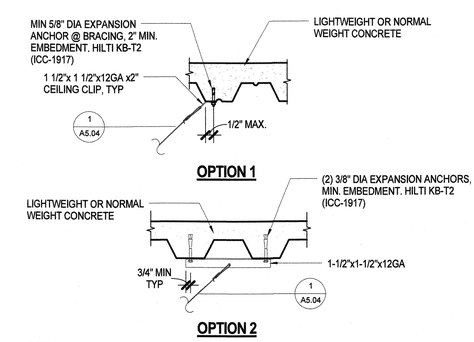

NOTES:

1. TEST POST INSTALLED ANCHORS IN ACCORDANCE WITH CEILING NOTE 5.02
2. REFER TO 1/A5.04 FOR ADDITIONAL DETAILS
3. POST INSTALLED ANCHORS TO BE PLACED NO MORE THAN 1" OFFSET FROM CENTERLINE OF DECK LOW FLUTE.

4 BRACING WIRE CONN. TO CONC./MET.
1 : 10

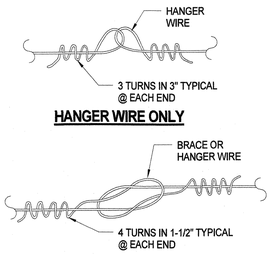

HANGER WIRE ONLY

HANGER OR BRACE WIRE

NOTES:

WIRE SPLICES ARE SHOWN LOOSELY TIED FOR ILLUSTRATIVE PURPOSES ONLY AND SHALL BE DRAWN TIGHT TO COMPLETE INSTALLATION WHEN CONSTRUCTED.

16 HANGER/BRACE WIRE
3" = 1'-0"

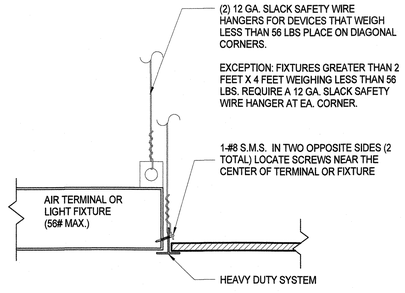

12 LIGHTING FIXTURE/DEVICE SUPPORT
3" = 1'-0"

J & S CONSULTING ENGINEERS, INC.
ELECTRICAL ▫ MECHANICAL
FIRE PROTECTION
3111 Winona Ave., #102
Burbank, Ca 91504
Tel.: (818) 841-0303
Fax: (818) 841-8531
624 Moorpark Road,
Moorpark, CA 93021
Tel.: (805) 523-1700
Fax: (805) 523-1702
www.jandsconsulting.com
E-Mail:jsmail@jandsconsulting.com
PROJECT No. 45461

AMADOR WHITTLE ARCHITECTS, INC.
28328 AGOURA ROAD, SUITE 203
AGOURA HILLS, CA 91301
(805) 530-3938 , (818) 874-0071

VENTURA COLLEGE
4667 TELEGRAPH ROAD, VENTURA, CALIFORNIA, 93003
VENTURA COUNTY COMMUNITY COLLEGE DISTRICT
MATH & SCIENCE COMPLEX

IDENTIFICATION STAMP
DIVISION OF THE STATE ARCHITECT
APPL. NO. 03-117754
AC ___ FLS ___ SS ___
DATE JUL 05 2017

NO.	DATE	DESCRIPTION	BY
	12.19.16	DSA SUBMITTAL	

REVISIONS

LICENSED ARCHITECT REGISTERED PROFESSIONAL ENGINEER ANN M. AMADOR C-22205 APRIL 30, 2019 RENEWAL DATE STATE OF CALIFORNIA

DRAWN BY:	RJF
CHECKED BY:	JAA
DATE	05.12.17
JOB NO:	14-JS VCCCD
SHEET TITLE	CEILING DETAILS
SHEET	A5.03
DWG #	25 OF 52

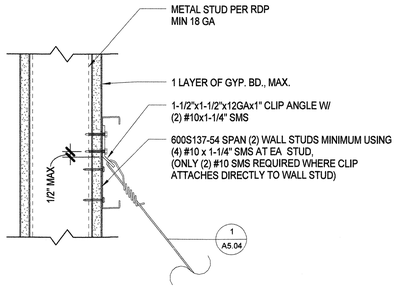

13 BRACING WIRE CON. TO METAL STUD WALL
3" = 1'-0"

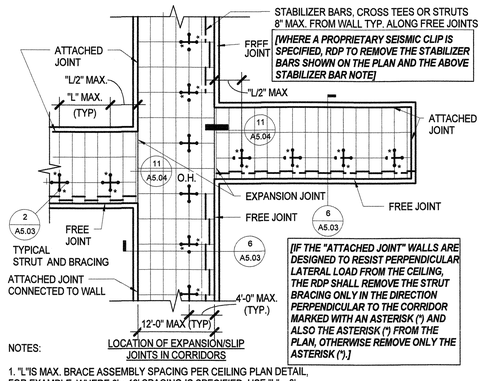

NOTES:
1. "L"IS MAX. BRACE ASSEMBLY SPACING PER CEILING PLAN DETAIL, FOR EXAMPLE, WHERE 8' x 12' SPACING IS SPECIFIED, USE "L" = 8'.

9 EXP/SLIP JNTS IN CORR. SUSP. AC. CLGS
3" = 1'-0"

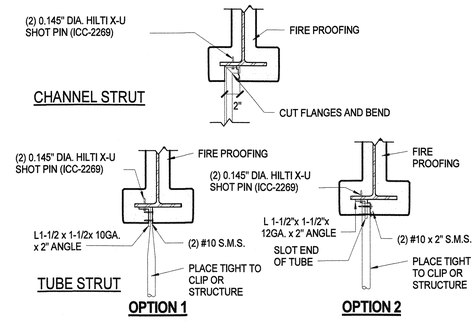

NOTES:
1. STRUCTURAL STEEL MEMBER SHALL NOT BE LESS THAN 3/16".
2. RDP IN RESPONSIBLE CHARGE, I.O.R. AND CONTRACTOR SHALL VERIFY THAT NO PAF IS INSTALLED IN THE PROTECTED ZONE OF ANY STEEL MEMBER, SEE ANSI/AISC 341-10.

5 STRUT CONN. TO STRUCTURAL STEEL
1 1/2" = 1'-0"

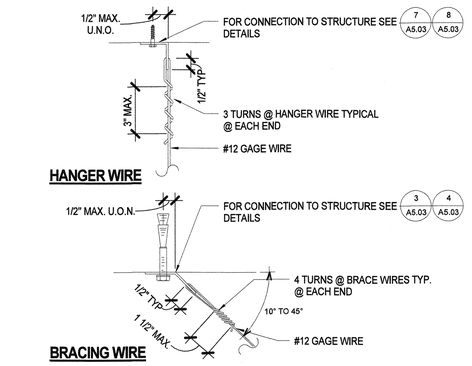

1 TYPICAL WIRE TURNS
3" = 1'-0"

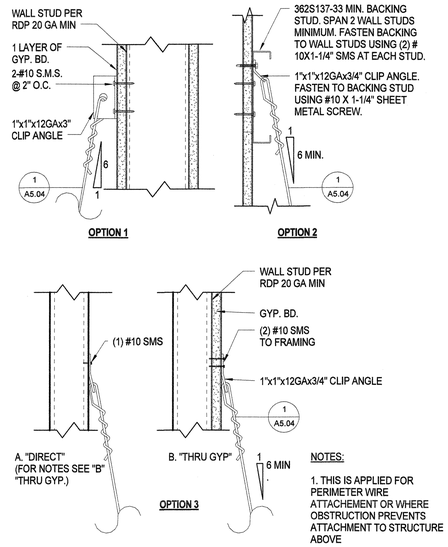

NOTES:
1. THIS IS APPLIED FOR PERIMETER WIRE ATTACHEMENT OR WHERE OBSTRUCTION PREVENTS ATTACHMENT TO STRUCTURE ABOVE

14 HANGER WIRE CON. TO METAL STUD WALL
3" = 1'-0"

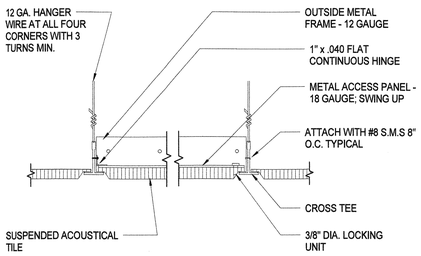

NOTES:
CONTRACTOR SHALL BE RESPONSIBLE FOR COORDINATING SIZE, LOCATION AND TYPE OF ACCESS PANELS WITH LOCATION AND REQUIREMENTS OF MECHANICAL EQUIPMENT CONCEALED ABOVE.

15 ACCESS DOOR
3" = 1'-0"

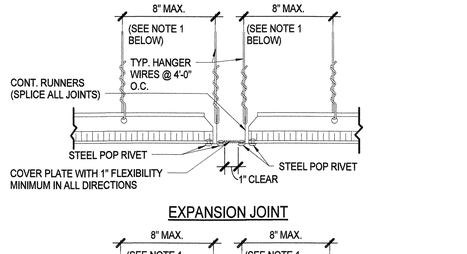

EXPANSION JOINT

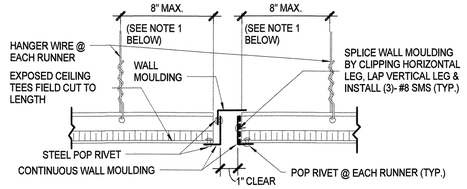

EXPANSION JOINT ALTERNATE

EXPANSION JOINTS AT THE INTERSECTION OF CORRIDORS AND AT JUNCTIONS OF CORRIDORS AND LOBBIES OR OTHER SIMILAR AREAS

NOTES:
1. PROVIDE #12 GAGE HANGER WIRES AT THE ENDS OF ALL MAIN AND CROSS RUNNERS WITHIN EIGHT (8) INCHES OF THE SUPPORT OR WITHIN ONE-FOURTH (1/4) OF THE LENGTH OF THE END TEE, WHICHEVER IS LESS, FOR THE PERIMETER OF THE CEILING AREA. PERIMETER WIRES ARE NOT REQUIRED WHEN THE LENGTH OF THE END TEE IS EIGHT (8) INCHES OR LESS.

11 EXPANSION JOINT AT INTERSECTION
3" = 1'-0"

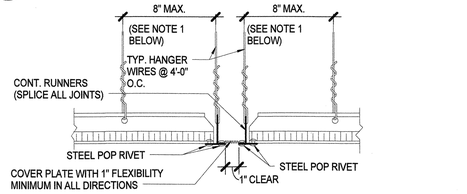

SEISMIC SEPARATION JOINT

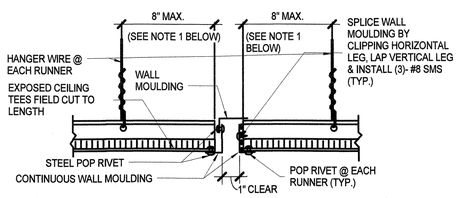

ALTERNATE SEISMIC SEPARATION JOINT

SEISMIC SEPARATION JOINT AT CONTINUOUS CEILING AREAS EXCEEDING 2500 SQ. FT.
SEE CEILING PLANS FOR LOCATION

NOTES:
1. PROVIDE #12 GAGE HANGER WIRES AT THE ENDS OF ALL MAIN AND CROSS RUNNERS WITHIN EIGHT (8) INCHES OF THE SUPPORT OR WITHIN ONE-FOURTH (1/4) OF THE LENGTH OF THE END TEE, WHICHEVER IS LESS, FOR THE PERIMETER OF THE CEILING AREA. PERIMETER WIRES ARE NOT REQUIRED WHEN THE LENGTH OF THE END TEE IS EIGHT (8) INCHES OR LESS.

12 SEISMIC SEPERATION JOINT
3" = 1'-0"

TABLE 7A

CHANNEL COMPRESSION STRUT	MAX. LENGTH
250S125-33	5'-0"
250S137-33	6'-10"
362S137-33	8'-0"
250137-43	8'-10"
400S137-43	10'-10"

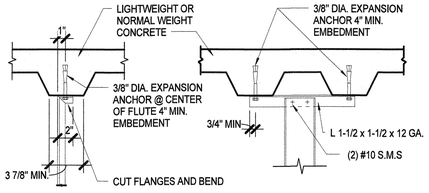

CHANNEL STRUT
SEE TABLE 7A

NOTES:
1. POST INSTALLED ANCHORS TO BE PLACED NO MORE THAN 1" OFFSET FROM CENTERLINE OF DECK LOW FLUTE
2. TEST POST INSTALLED ANCHORS IN ACCORDANCE WITH CEILING NOTE 5.01

7 CHANNEL STRUT - TOP CONN.
1 1/2" = 1'-0"

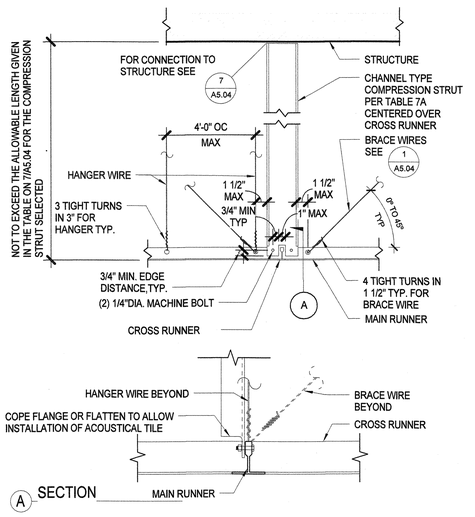

8 CHANNEL TYPE STRUT
3" = 1'-0"

TABLE 3A

EMT COMPRESSION STRUT	MAX. LENGTH
1/2" DIAMETER EMT (0.042" WALL THICKNESS)	5'-10"
3/4" DIAMETER EMT (0.049" WALL THICKNESS)	7'-8"
1" DIAMETER EMT (0.057" WALL THICKNESS)	9'-9"
1 1/4" DIAMETER EMT (0.065" WALL THICKNESS)	12'-9"
1 1/2" DIAMETER EMT (0.065" WALL THICKNESS)	14'-9"
2" DIAMETER EMT (0.065" WALL THICKNESS)	18'-10"

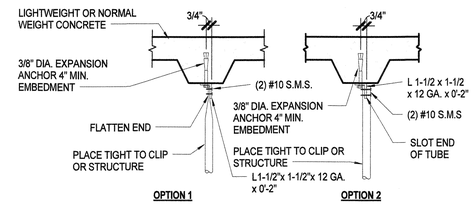

TUBE STRUT
SEE TABLE 3A

3 TUBE STRUT - TOP CONN.
3" = 1'-0"

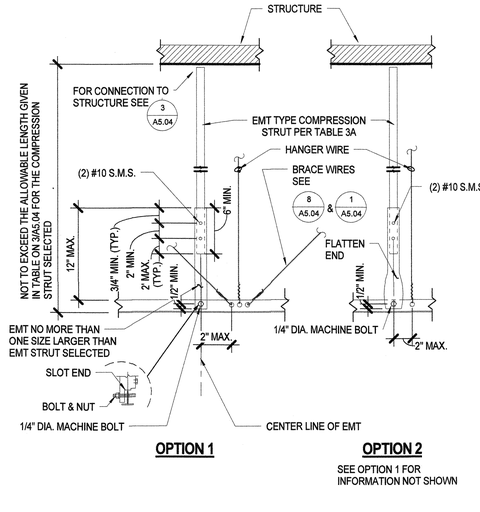

4 TUBE TYPE STRUT
1 1/2" = 1'-0"

J & S CONSULTING ENGINEERS, INC.
ELECTRICAL ◦ MECHANICAL
FIRE PROTECTION
3111 Winona Ave., #102
Burbank, Ca 91504
Tel.: (818) 841-0303
Fax: (818) 841-8531
624 Moorpark Road,
Moorpark, CA 93021
Tel.: (805) 523-1700
Fax: (805) 523-1702
www.jandsconsulting.com
E-Mail:jsmail@jandsconsulting.com
PROJECT No. 45461

AMADOR WHITTLE
ARCHITECTS, INC.
28328 AGOURA ROAD, SUITE 203
AGOURA HILLS, CA 91301
(805) 530-3938 , (818) 874-0071

VENTURA COLLEGE
4667 TELEGRAPH ROAD, VENTURA, CALIFORNIA, 93003
VENTURA COUNTY COMMUNITY COLLEGE DISTRICT
MATH & SCIENCE COMPLEX

IDENTIFICATION STAMP
DIVISION OF THE STATE ARCHITECT
APPL. NO. 03-117754
AC — FLS — SS
DATE JUL 05 2017

NO.	DATE	DESCRIPTION	BY
	12.19.16	DSA SUBMITTAL	
REVISIONS			

LICENSED ARCHITECT LEE ANN AMADOR C-22205 APRIL 30, 2019 RENEWAL DATE STATE OF CALIFORNIA

DRAWN BY:	RJF
CHECKED BY:	JAA
DATE	05.12.17
JOB NO:	14-JS VCCCD

SHEET TITLE
CEILING DETAILS

SHEET
A5.04
DWG # 26 OF 28

GYPSUM BOARD CEILING SUSPENSION NOTES (IR 25-3.13 rev 04-08-14):

1. **MATERIALS:** Materials are to comply with CBC Section 2508 and applicable ASTM standards. Gypsum wallboard is either 1/2 inch or 5/8 inch in thickness. Cold-formed steel sections specified in this IR are identified by a product designator which has been standardized by the American Iron and Steel Institute (AISI) in collaboration with the Steel Stud Manufacturers Association (SSMA).

2. **DESIGN:** The prescriptive requirements of this IR shall be taken as the minimum requirements and apply to a ceiling that is not accessible, has a single layer of gypsum board not exceeding 5/8" thick, and has a total ceiling weight not to exceed 4 pounds per square foot (psf). A ceiling that is required by CCR Title 24 to be accessible, or otherwise does not meet these limitations, shall be designed to meet the applicable requirements of CBC Sections 1607A and 2508.1, and ASCE 7-10, Section 13.3.1.

3. **DETAILS OF CONSTRUCTION:**

3.1 **General:** Gypsum wallboard ceilings shall not support building components other than air conditioning/heating grills or light fixtures. All such components shall be supported either directly from main runners, or by supplemental framing which is supported by main runners. No vertical loads other than gypsum board dead load shall be applied to cross-furring.

3.2 **Vertical Support System:** There are many possible variations of main runner sizes, spacings and spans listed in ASTM C754-04, Table 7. All of the combinations are acceptable, provided the main runner spacing does not exceeded 4'-0" and the ceiling area supported by a hanger wire does not exceed 16 square feet.

3.2.1 **Main Runner Spacing and Span:** The main runner most frequently used is a 1-1/2 inch cold rolled channel designated 150U050-54 (1-1/2 inch cold rolled channels weighing 0.414 lbs/ft) spaced no more than 4'-0" o.c. with a hanger wire spacing not to exceed 4'-0" o.c. and no more than 6" from each end of the main runner.

3.2.2 **Vertical Hanger Wires:** Ceiling wire shall be Class 1 zinc coated (galvanized) carbon steel conforming to ASTM A641. Wire shall be #9 gage (0.148" diameter) with soft temper and minimum tensile strength = 70 ksi.

3.2.3 **Cross-furring:** 7/8 inch galvanized steel hat sections, designated 087F125-18, at 24 inches o.c. maximum.

3.3 **Connecting Hanger Wires, Steel Framing and Furring:**

3.3.1 Hanger wires shall be saddle-tied to the main runners per 11/A5.03.

3.3.2 Cross furring should be saddle-tied to the main runners with at least one strand of #16 gage, or two strands of #18 gage tie wire.

3.3.3 Main runners shall be spliced by lapping and interlocking flanges and installing two (2) #8 screws at each end of splice. The lap must be a minimum of 12 inches long.

3.3.4 Cross furring should be spliced by lapping and interlocking the pieces and installing two (2) #8 screws at each end of splice. The lap must be a minimum of eight (8) inches long.

3.4 **Installation and Anchorage of Hanger and Bracing Wires:** Fasten hanger wires with not less than three (3) tight turns within a distance of three inches. Hanger wire loops shall be tightly wrapped and sharply bent to prevent any vertical movement or rotation of the member within the loops (see ASTM E580, Section 5.2.7.2). Fasten bracing wires with four (4) tight turns within a distance of one and one-half (1-1/2) inches. Hanger and bracing wire anchors shall be installed in such a manner that the direction of the anchor aligns as closely as possible with the direction of the wire.

3.4.1 Separate all ceiling hanger and bracing wires at least six (6) inches from all unbraced ducts, pipes, conduit, etc.

3.4.2 When drilled-in concrete anchors or power actuated fasteners are used in reinforced concrete for hanger wires, 1 out of 10 must be field tested for 200 lbs. in tension. When drilled-in concrete anchors are used for bracing wires, 1 out of 2 must be field tested for 440 lbs in tension. Power actuated fasteners in concrete are not permitted for bracing wires. If any power actuated fastener or drilled-in anchor fails, see 2013 CBC Section 1913A.7.1 or 1913.2.11.1".

Note: Drilled-in anchors or power actuated fasteners embedment depth shall be limited in prestressed concrete to not impinge tensioned reinforcement or special procedures shall be developed to locate and clear tensioned reinforcement.

3.4.3 Provide trapeze or other supplementary support members at obstructions to typical hanger spacing. Provide additional hangers, struts or braces as required at all ceiling breaks, soffits or discontinuous areas. Hanger wires that are more than 1 in 6 out of plumb are to have counter-sloping wires.

4. **CEILING FIXTURES, TERMINALS, AND DEVICES:**

4.1 All recessed or drop-in light fixtures, as well as ceiling mounted mechanical air terminals and services, shall be supported directly by main runners or by supplemental framing which is supported by main runners and positively attached with screws or other approved connectors to resist a horizontal force equal to the weight of the component. A minimum of two attachments are required at each fixture and component.

4.2 Surface mounted fixtures shall be attached to a main runner with a positive clamping device made of material with a minimum of 14 gage. Rotational spring clamps do not comply.

4.3 Light fixtures, grilles, mechanical terminals, and flexible sprinkler hose fittings or other services weighing greater than 20 lbs. must be independently supported by not less than two (2) taut #12 gage wires where less than 56 pounds, and four (4) taut #12 gage wires where greater than or equal to 56 pounds, and attached to the housing and to the structure above. The wires, including their attachment to the structure above, must be capable of supporting four (4) times the weight of the unit.

4.4 All lightweight miscellaneous devices, such as strobe lights, occupancy sensors, speakers, exit signs, etc., shall be attached to the ceiling per Section 4.1 of this IR. Devices weighing more than 20 lbs. shall be suported from the structure above per Section 4.3 of this IR.

4.5 Penetrations through the ceiling for sprinkler heads and other similar devices that are not integrally tied to the ceiling system in the lateral direction shall have a two (2) inch oversized ring, sleeve or adapter through the ceiling tile to allow free movement of one (1) inch in all horizontal directions. Alternatively, per ASTM E580, Section 5.2.8.5, a flexible sprinkler hose fitting that can accommodate 1 inch of ceiling movement shall be permitted to be used in lieu of the oversized ring, sleeve, or adapter.

4.6 **Access Panels:** Access to the space between the ceiling and the floor or roof above shall not be allowed. Small access panels for the inspection, adjustment or repair of utility switches, valves, sensor, etc., may be allowed if the panel is less than 300 square inches, Such panels shall also have a permanently attached warning label as follows:

"**Warning:** 1) Do not climb, walk, or crawl on the gypsum board ceiling panels or metal framing.

2) Do not store or stow anything on the gypsum board ceiling panels or metal framing."

If fire fighter access is required per CBC Section 1209.2 in attics of combustible construction, the prescriptive suspended ceiling system prescribed in this IR is not applicable, and the ceiling shall be framed and designed for such loading.

5. **LATERAL SYSTEM:** A gypsum board ceiling greater than 144 square feet in area shall be designed to resist its own seismic loads, per Section 2 above, and shall not be permitted to be used to resist primary structural loads or other loads. There are two optional lateral systems for this purpose:

- The brace wire system, per Section 5.1.
- The diaphragm system, per Section 5.2.

Either or both options may be shown on plans or noted in the specifications.

Notes: 1. If both options are shown on the plans or noted in the specifications, only one option can be used for each separate ceiling area.

2. Fire-rated systems shall be installed per rated listing (i.e. UL, Factory Mutual, etc.) and manufactures' instruction, and the rated listing may dictate the optional lateral system used.

5.1 **Brace Wire System:** Lateral force bracing assemblies shall consist of a compression strut and four (4) #12 gage splayed bracing wires oriented 90 degrees from each other (see 2/A5.03). Lateral force bracing assemblies shall be spaced, per Table 1 for all values of the component importance factor (Ip) of the ceiling.

TABLE 1
LATERAL FORCE BRACE ASSEMBLY SPACING

Design Spectral Acceleration Paramenter, Sps	Brace Assembly Spacing
Less than or equal to 1.15	12'x12' Full building Height
Greater than 1.15 and less than or equal to 1.73	8'x12' for z/h greater than 0.5 12'x12' for z/h less than or equal to 0.5
Greater than 1.73	8'x8' for z/h greater than 0.5 8'x12' for z/h less than or equal to 0.5

Where, as defined in ASCE 7-10, Section 13.3.1:
z = height in structure of point of attachment of ceiling with respect to the base.
h = average roof height of the structure with respect to the base.

Where different brace spacing is specified at various stories, the respective ceiling plan shall clearly indicate the brace spacing.

5.1.1 There shall be a brace assembly a distance of not more than one half of the above spacing from each surrounding wall, expansion joint and at the edge of any ceiling vertical offset. For example, where the brace spacing is 8'x12', the distance shall be 4 feet in the direction of the 8 foot spacing and 6 feet in the direction of the 12 foot spacing.

5.1.2 The slope of bracing wires shall not exceed 45 degrees from the plane of the ceiling and shall be taut. Splices in bracing wires are not to be permitted without DSA approval.

5.1.3 Ceiling grid members may be attached to not more than two (2) adjacent walls. Ceiling grid members shall be at least 1 inch free of other walls. If walls run diagonally to ceiling grid system runners, one end of main and cross runners should be free, and a minimum of 1 inch clear of wall.

5.1.4 Suspended ceiling systems with an area of 144 square feet or less, surrounded by walls which connect directly to the structure above, do not require bracing assemblies when attached to at least two adjacent walls and the perimeter walls are designed to carry the ceiling lateral forces.

5.2 **Diaphragm System:** A suspended gypsum board ceiling may be designed as a horizontal diaphragm to resist its own seismic loads as prescribed in this section. Gypsum board shall not be used in diaphragm ceilings to resist lateral forces imposed by partitions.

5.2.1 **Diaphragm Ratios:**

Horizontal 2:1 maximum

Vertical 1:1 maximum

5.2.2 A maximum diaphragm shear equal to 50 lbs/ft is allowed with 1 inch or 1-1/4 inch Hi-Lo Types S, or S-12, bugle head screws at 12 inches o.c. at all gypsum board edges (3/8 inch screw edge distance) and all intermediate supports. A wall constructed similarly can resist the same shear force provided the gypsum board is on the same side of the studs as the ceiling is, and a positive connection between the ceiling and the wall is detailed. The gypsum board diaphragms are to resist lateral loads due to their own weight and/or the ceiling diaphragm(s) only.

5.2.3 Details are required providing for lateral load transfer from the gypsum board to shear walls, or other lateral load resisting elements, on all four sides of the diaphragm. There shall be no steps or vertical offsets in the ceiling plane.

6. **DSA ACCEPTANCE OF EVALUATION REPORTS:** At the discretion of the DSA, proprietary systems may be accepted under all the following conditions:

- Acceptance will be granted on a project specific basis.
- Proprietary systems must meet the requirements of the CBC.
- Proprietary systems must have valid evaluation reports meeting the provisions of IR A-5.

In accordance with DSA IR A-5, DSA will accept OSHPD Preapproved Details (OPD) "2103 CBC Standard Gypsum Board Ceiling Details for Suspended and Joist Framing Construction."

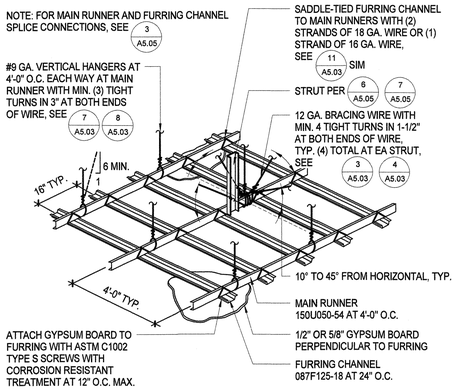

5 SUSP. GYP. BD. CEILING BRACING ASSEMBLY
3/8" = 1'-0"

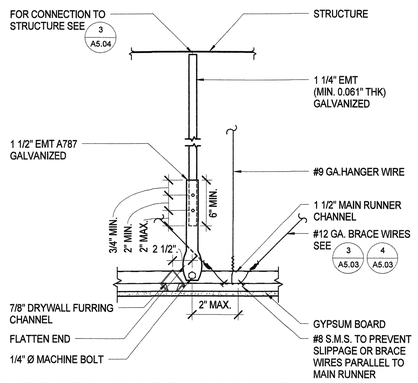

6 TUBE STRUT & BRACING WIRE
1 1/2" = 1'-0"

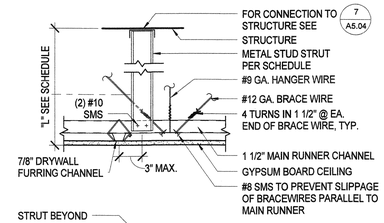

SIDE VIEW

STRUT SCHEDULE	
L	STRUT
L ≤ 5'-0"	250T125-33
5'-0" < L ≤ 8'-0"	400S137-33

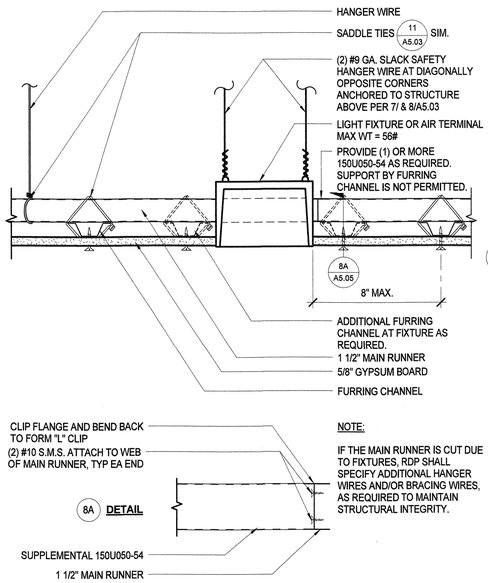

7 METAL STUD STRUT & BRACING WIRE
1 1/2" = 1'-0"

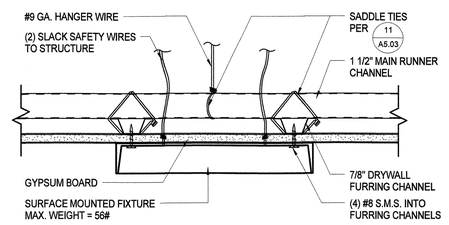

8 SURFACE MOUNTED FIXTURE
3" = 1'-0"

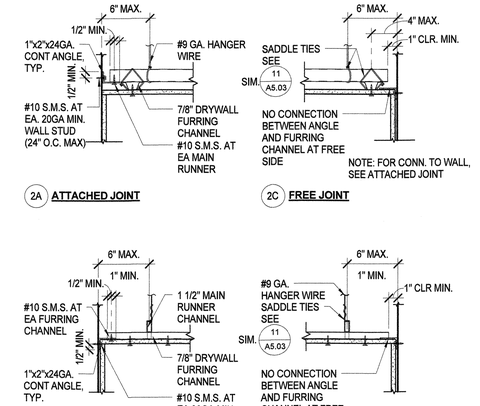

1 TYPICAL CEILING PLAN
1/8" = 1'-0"

2 CEILING PERIMETER
1 1/2" = 1'-0"

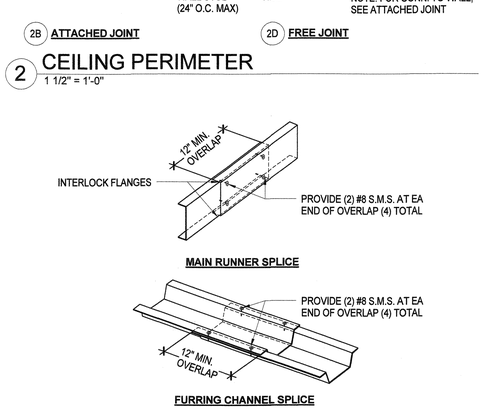

3 SPLICE DETAILS
1" = 1'-0"

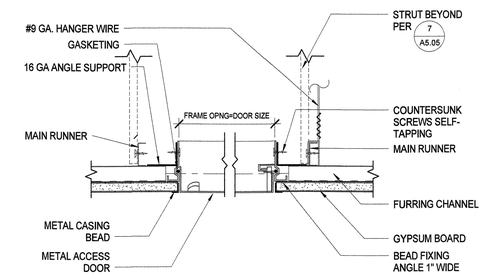

4 ACCESS DOOR IN GYP BD CEILING
3" = 1'-0"

J & S CONSULTING ENGINEERS, INC.
ELECTRICAL + MECHANICAL
FIRE PROTECTION
3111 Winona Ave., #102
Burbank, Ca 91504
Tel.: (818) 841-0303
Fax: (818) 841-8531
624 Moorpark Road,
Moorpark, CA 93021
Tel.: (805) 523-1700
Fax: (805) 523-1702
www.jandsconsulting.com
E-Mail:jsmail@jandsconsulting.com
PROJECT No. 45461

AMADOR WHITTLE
ARCHITECTS, INC.
28328 AGOURA ROAD, SUITE 203
AGOURA HILLS, CA 91301
(805) 530-3938 , (818) 874-0071

VENTURA COLLEGE
4667 TELEGRAPH ROAD, VENTURA, CALIFORNIA, 93003
VENTURA COUNTY COMMUNITY COLLEGE DISTRICT
MATH & SCIENCE COMPLEX

IDENTIFICATION STAMP
DIVISION OF THE STATE ARCHITECT
APPL. NO. 03-117754
AC ____ FLS ____ SS ____
DATE JUL 05 2017

NO.	DATE	DESCRIPTION	BY
	12.19.16	DSA SUBMITTAL	

REVISIONS

LICENSED ARCHITECT JOHN WHITTLE AMADOR C-22205 APRIL 30, 2019 RENEWAL DATE STATE OF CALIFORNIA

DRAWN BY:	RJF
CHECKED BY:	JAA
DATE	05.12.17
JOB NO:	14-JS VCCCD

SHEET TITLE

GYPSUM BOARD CEILING DETAILS

SHEET

A5.05

DWG # 23 OF 82

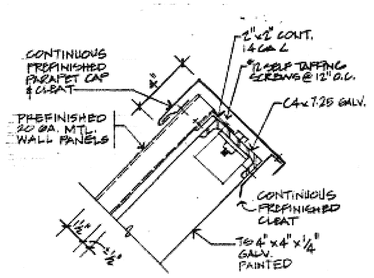

13 EQUIPMENT SCREEN
3" = 1'-0"

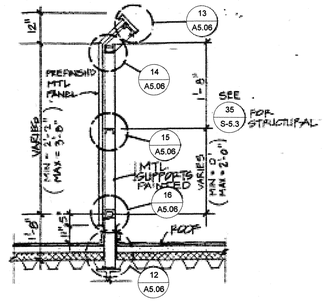

9 EQUIPMENT SCREEN
1/2" = 1'-0"

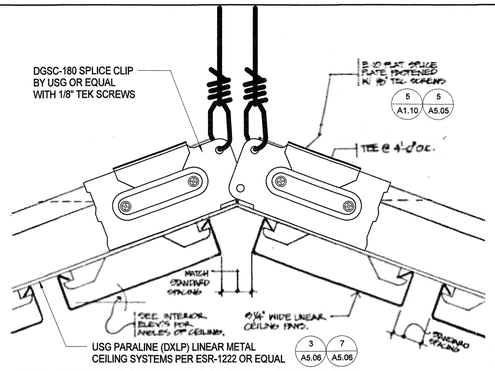

NOTES: MAIN RUNNER: DXLP 1 1/2" DEEP, BULB-SHAPED STEEL MAIN TEES SPACED AT 48" O.C. WITH 1 1/2" DEEP CROSS RUNNER: DXL STEEL CROSS TEES SPACED AT 24" O.C.

5 CEILING TRANSITION
12" = 1'-0"

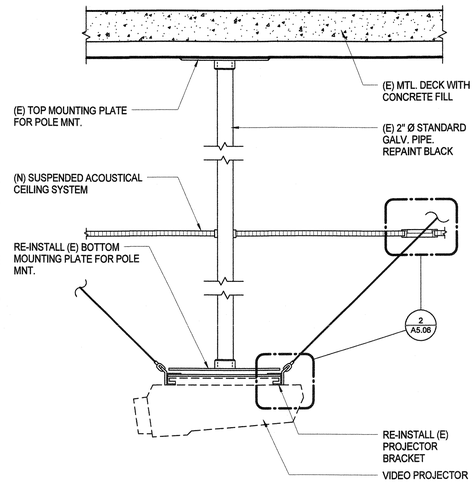

1 VIDEO PROJECTOR MOUNT
1 1/2" = 1'-0"

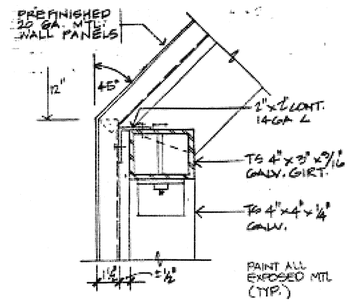

14 EQUIPMENT SCREEN
3" = 1'-0"

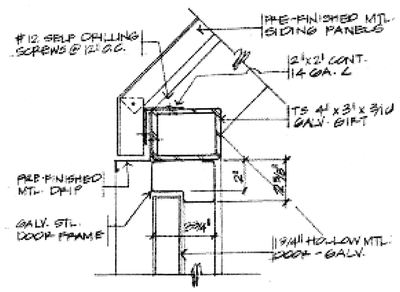

10 EQUIPMENT SCREEN - DOOR HEAD
3" = 1'-0"

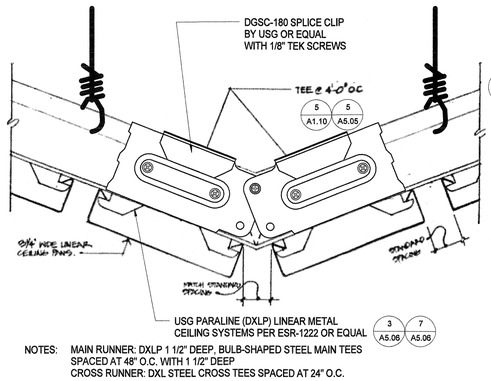

NOTES: MAIN RUNNER: DXLP 1 1/2" DEEP, BULB-SHAPED STEEL MAIN TEES SPACED AT 48" O.C. WITH 1 1/2" DEEP CROSS RUNNER: DXL STEEL CROSS TEES SPACED AT 24" O.C.

6 CEILING TRANSITION
12" = 1'-0"

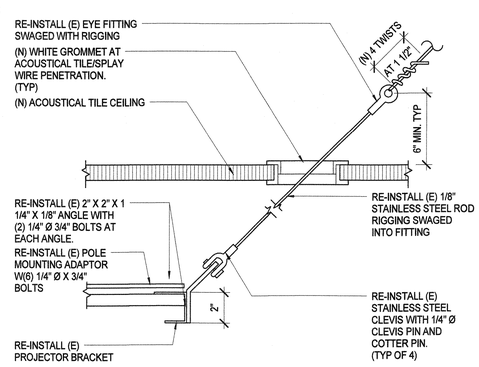

2 VIDEO PROJECTOR MOUNT DETAIL
3" = 1'-0"

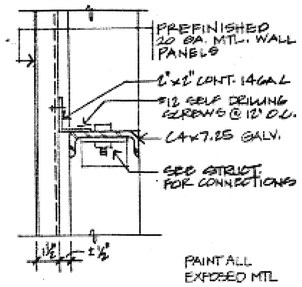

15 EQUIPMENT SCREEN
3" = 1'-0"

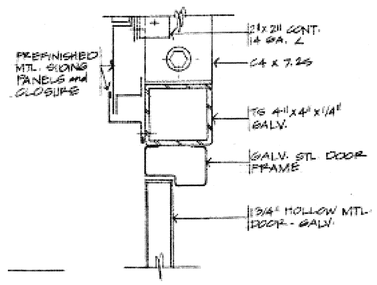

11 EQUIPMENT SCREEN - DOOR JAMB
3" = 1'-0"

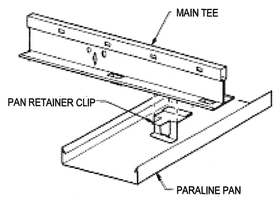

PAN RETAINER CLIP -
USG PARALINE (DXLP) SYSTEM
N.T.S.

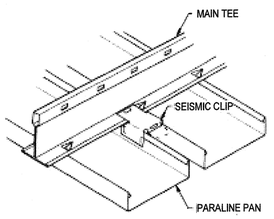

3 SEISMIC CLIP - USG PARALINE (DXLP) SYSTEM
N.T.S.

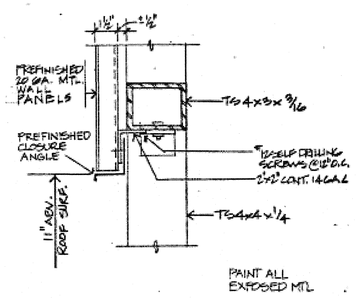

16 EQUIPMENT SCREEN
3" = 1'-0"

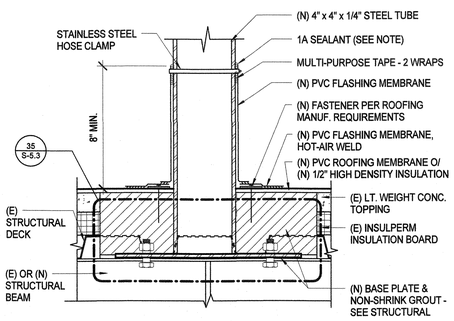

NOTES:
1. SEALANT IS A MAINTENANCE ITEM. MAINTENANCE IS NOT COVERED UNDER WARRANTY.

12 EQUIPMENT SCREEN SUPPORT
3" = 1'-0"

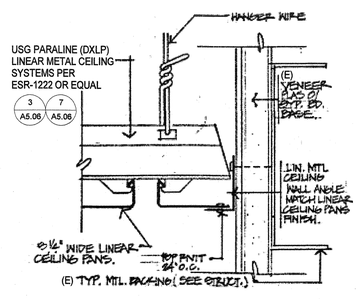

NOTES: MAIN RUNNER: DXLP 1 1/2" DEEP, BULB-SHAPED STEEL MAIN TEES SPACED AT 48" O.C. WITH 1 1/2" DEEP CROSS RUNNER: DXL STEEL CROSS TEES SPACED AT 24" O.C.

8 LINEAR METAL CEILING TO WALL
FULL SIZE

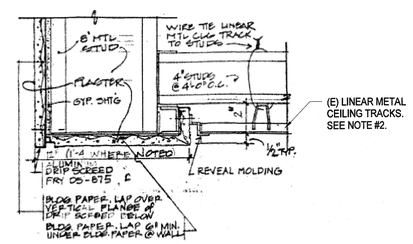

NOTE:
1. ALL ITEMS SHOWN ARE EXISTING.

2. EXISTING LINEAR METAL CEILING TRACKS SHALL BE REMOVED AND PROTECTED PRIOR TO ACCESS UNDERSIDE OF ROOF; AND TO BE REINSTALLED AFTER COMPLETION OF DUCT AND ROOF UNDERSIDE WORK.

4 SOFFIT
3" = 1'-0"

J & S CONSULTING ENGINEERS, INC.
ELECTRICAL ▫ MECHANICAL
FIRE PROTECTION
3111 Winona Ave., #102
Burbank, Ca 91504
Tel.: (818) 841-0303
Fax: (818) 841-8531
624 Moorpark Road,
Moorpark, CA 93021
Tel.: (805) 523-1700
Fax: (805) 523-1702
www.jandsconsulting.com
E-Mail:jsmail@jandsconsulting.com
PROJECT No. 45461

AMADOR WHITTLE
ARCHITECTS, INC.
28328 AGOURA ROAD, SUITE 203
AGOURA HILLS, CA 91301
(805) 530-3938 , (818) 874-0071

VENTURA COLLEGE
4667 TELEGRAPH ROAD, VENTURA, CALIFORNIA, 93003
VENTURA COUNTY COMMUNITY COLLEGE DISTRICT
MATH & SCIENCE COMPLEX

IDENTIFICATION STAMP
DIVISION OF THE STATE ARCHITECT
APPL. NO. 03-117754
AC — FLS — SS
DATE JUL 05 2017

NO.	DATE	DESCRIPTION	BY
	12.19.16	DSA SUBMITTAL	

REVISIONS

DRAWN BY:	VV/ WTJ
CHECKED BY:	MJQ
DATE	05.12.17
JOB NO:	14-JS VCCCD

SHEET TITLE

CEILING & MISCELLANEOUS DETAILS

SHEET

A5.06

DWG# ___ OF 82

REINFORCEMENT

1. ALL TYPICAL REINFORCING BARS SHALL CONFORM TO ASTM A-615, GRADE 60, UNLESS NOTED OTHERWISE ON THE DRAWINGS.

   A. SPIRALS SHALL BE COLD DRAWN BARS CONFORMING TO ASTM A-82. REINFORCING FOR DIAPHRAGMS AND FOUNDATIONS MAY BE GRADE 75 IN LIEU OF GRADE 60, AT THE CONTRACTOR'S OPTION. MAINTAIN OVERALL CAPACITY OF ELEMENTS WHERE GRADE 75 REINFORCING IS PROPOSED FOR USE. IN GENERAL, REDUCE REQUIRED STEEL AREA IN PROPORTION TO RATIO OF YIELD STRENGTH. MAINTAIN BAR SPACING SHOWN ON PLANS, DETAILS, AND SCHEDULES.
   B. MOMENT FRAME LONGITUDINAL REBARS, SHEAR WALL VERTICAL REBARS, AND COUPLING BEAM LONGITUDINAL REBARS SHALL BE ASTM A-706 [Fy=60 KSI].
   C. SMOOTH DOWELS IN SLAB ON GRADE: ASTM A36, 36 KSI

2. WELDING OF REINFORCEMENT (INCLUDING TACK WELDING) SHALL BE NOT BE DONE UNLESS SPECIFICALLY SHOWN ON THE DRAWINGS. WHERE SHOWN ON THE DRAWINGS, THE FOLLOWING SHALL APPLY:

   A. WELDED REBAR SHALL COMPLY WITH ASTM A-706 [Fy=60 KSI]
   B. WELDING SHALL CONFORM TO AWS D1.4
   C. WELDING OF REINFORCING STEEL SHALL BE PERFORMED BY WELDERS CERTIFIED BY THE CITY OF LA
   D. USE E90XX ELECTRODES

3. WELDED WIRE FABRIC SHALL BE MADE OF COLD DRAWN WIRE AND SHALL CONFORM TO ASTM A-185 [Fy=65 KSI]. MINIMUM LAP AT SPLICES OF 12 INCHES. PROVIDE MESH IN FLAT SHEETS ONLY. ROLLED MESH IS NOT ACCEPTABLE. OFFSET END-LAPS IN ADJACENT SHEETS TO PREVENT CONTINUOUS LAPS.

4. REINFORCING STEEL SHALL HAVE THE FOLLOWING CONCRETE COVER. SEE ACI FOR TOLERANCES:

A. CONCRETE POURED AGAINST EARTH	3"
B. FORMED CONCRETE IN CONTACT WITH EARTH	2"
C. CONCRETE EXPOSED TO WEATHER (#6 AND LARGER)	2"
D. CONCRETE EXPOSED TO WEATHER (#5 AND SMALLER)	1-1/2"
E. SLABS (INCLUDING SLAB SUPPORTING EARTH), WALLS, AND JOISTS NOT EXPOSED TO WEATHER (#11 AND SMALLER)	1"
F. OTHER CONCRETE NOT EXPOSED TO WEATHER	1-1/2"

5. #5 AND LARGER REINFORCING BARS SHALL NOT BE SPLICED EXCEPT AS LOCATED AND DETAILED ON THE DRAWINGS. #4 AND SMALLER BARS WITH LENGTHS NOT SHOWN SHALL BE CONTINUOUS. PROVIDE CLASS 'B' SPLICE UNLESS NOTED OTHERWISE. ALL BARS IN MASONRY SHALL BE CONTINUOUS, LAPPING 48 BAR DIAMETERS, 2'-0" MINIMUM. HORIZONTAL WALL SPLICES SHALL BE STAGGERED. VERTICAL BARS SHALL NOT BE SPLICED EXCEPT AT HORIZONTAL SUPPORTS, SUCH AS FLOOR OR ROOF, UNLESS DETAILED OTHERWISE. ALL BARS ENDING AT THE FACE OF A WALL, COLUMN, OR BEAM SHALL EXTEND TO WITHIN 2" OF THE FAR FACE AND HAVE A 90 DEGREE HOOK, UNLESS OTHERWISE SHOWN.

6. BARS SHALL BE FIRMLY SUPPORTED AND ACCURATELY PLACED AS REQUIRED BY THE ACI STANDARDS, USING TIE AND SUPPORT BARS IN ADDITION TO REINFORCEMENT SHOWN WHERE NECESSARY FOR FIRM AND ACCURATE PLACING. PROVIDE DOWELS TO MATCH ALL REINFORCEMENT AT POUR JOINTS, UNLESS SHOWN OR NOTED OTHERWISE. ALL DOWELS AND BOLTS SHALL BE ACCURATELY SET IN PLACE BEFORE PLACING CONCRETE. NO WELDING OF REINFORCEMENT (INCLUDING TACK WELDING) SHALL BE DONE UNLESS SHOWN ON THE DRAWINGS OR APPROVED BY THE ENGINEER. ALL SLAB AND BEAM REINFORCEMENT SHALL BE CHAIRED UP.

7. IN WALL REINFORCING, CURTAINS CONTAINING VERTICAL AND HORIZONTAL BARS OF THE SAME SIZE, VERTICAL BARS SHALL BE PLACED CLOSEST TO THE WALL SURFACE. IN CURTAINS WHICH VERTICAL AND HORIZONTAL BARS ARE OF DIFFERENT SIZES OR SPACING, THE LAYER WITH THE MOST STEEL SHALL BE PLACED CLOSEST TO THE NEAR SURFACE.

8. ALL BARS INTERRUPTED BY STRUCTURAL STEEL SHALL EXTEND TO WITHIN 1" OF STRUCTURAL STEEL FLANGE OR WEB AND HAVE A 90 DEGREE HOOK, UNLESS OTHERWISE SHOWN.

9. DRAWINGS SHOW TYPICAL REINFORCING CONDITIONS. CONTRACTOR SHALL PREPARE DETAILED PLACEMENT DRAWINGS OF ALL CONDITIONS SHOWING QUANTITY, SPACING, SIZES, CLEARANCES, LAPS, INTERSECTIONS, AND COVERAGE REQUIRED BY THE STRUCTURAL DETAILS, APPLICABLE CODE, AND TRADE STANDARDS. CONTRACTOR SHALL NOTIFY REINFORCING INSPECTOR OF ANY ADJUSTMENTS FROM TYPICAL CONDITIONS WHICH ARE PROPOSED IN PLACEMENT DRAWINGS TO FACILITATE FIELD PLACEMENT OF REINFORCING STEEL AND CONCRETE.

10. ALL PRINCIPAL REBAR SHALL TERMINATE WITH A STANDARD HOOK MINIMUM UNLESS SPECIFICALLY DETAILED OTHERWISE. REBAR BENDS SHALL BE MADE COLD. REBAR SHALL NOT BE BENT AFTER ANY PORTION OF THE BAR IS ENCASED IN CONCRETE.

11. ALL LAP SPLICES ARE CLASS 'B' LAP SPLICES UNLESS NOTED OTHERWISE.

12. ALL WALL FOOTING REINFORCEMENT SHALL BEND AROUND ALL CORNERS AND EXTEND 36 BAR DIAMETERS OR 18 INCHES WHICHEVER IS LARGER. UNLESS NOTED OTHERWISE.

13. ALL SLABS ON GRADE LESS THAN 6" IN THICKNESS SHALL BE REINFORCED WITH #4 REBARS AT 16 INCHES ON CENTERS EACH WAY, UNLESS NOTED OTHERWISE. PROVIDE ONE (1) LAYER OF 6X6/W2.9XW2.9 WELDED WIRE FABRIC CONTINUOUS FOR EVERY 3" ARCHITECTURAL CONCRETE FILLS ABOVE THE STRUCTURAL SLAB.

14. ALL MECHANICAL, PLUMBING AND ELECTRICAL EQUIPMENT PADS LESS THAN 4" THICK SHALL BE REINFORCED WITH AT LEAST ONE (1) LAYER OF 6X6/W2.9XW2.9 WELDED WIRE FABRIC AND HAVE HOOKED DOWELS (#3 AT 12' ON CENTERS) INTO THE STRUCTURAL SLAB. UNLESS NOTED OTHERWISE. FOR PADS GREATER THAN 4 INCHES THICK, USE REINFORCING AS SHOWN IN THE TYPICAL DETAILS.

15. ADDITIONAL REINFORCEMENT SHALL BE PROVIDED AROUND ALL SLAB AND WALL OPENINGS INCLUDING DIAGONAL BARS WITHOUT EXCEPTION.

16. ALL STRUCTURAL CONCRETE ELEMENTS REQUIRE REINFORCEMENT SINCE NO PLAIN CONCRETE ELEMENTS ARE USED. ALL CONCRETE SLABS SHALL HAVE A MINIMUM REINFORCEMENT PERCENTAGE OF 0.18 EACH WAY CONTINUOUS.

RECOMMENDED SPECIFICATIONS FOR AUTOMATIC END WELDED STUDS

A. MATERIAL
AUTOMATIC ENDED WELDED STUDS SHALL BE NELSON GRANULAR SHEAR CONNECTOR STUDS OR NELSON DEFORMED BAR ANCHOR STUDS (OR APPROVED EQUAL).

STUDS SHALL BE MANUFACTURED OF C-1015 COLD ROLLED STEEL WHICH CONFORMS TO A.S.T.M. SPECIFICATION A-108. GRADES C-1010 THROUGH C-1020 COLD-DRAWN STEEL NELSON DEFORMED BAR ANCHOR STUDS ARE PRODUCED FROM DEFORMED WIRE COMPLYING WITH A.S.T.M. A496.

B. INSTALLATION
THE STUDS SHALL BE AUTOMATICALLY END WELDED IN ACCORDANCE WITH THE MANUFACTURER'S RECOMMENDATIONS IN SUCH A MANNER AS TO PROVIDE COMPLETE FUSION BETWEEN THE END OF THE STUD AND THE PLATE. THERE SHOULD BE NO POROSITY OR EVIDENCE OF LACK OF FUSION BETWEEN THE WELDED END OF THE STUD AND THE PLATE. THE STUD SHALL DECREASE IN LENGTH DURING WELDING APPROXIMATELY 1/8" FOR 5/8" INCH AND UNDER, AND 3/16" FOR OVER 5/8" DIAMETER. WELDING SHALL BE DONE ONLY BY QUALIFIED WELDERS APPROVED BY AN AWS-CWI INSPECTOR APPROVED BY DSA.

C. INSPECTION AND TESTS
INSPECTION, IN ACCORDANCE WITH TITLE 24, SECTION 2213A.2, OF ALL THE SHOP AND FIELD WELDING OPERATIONS FOR THE AUTOMATIC END WELDED STUDS SHALL BE MADE BY AN AWS-CWI INSPECTOR APPROVED BY THE DIVISION OF THE STATE ARCHITECT. THE TYPE AND CAPACITY OF THE WELDING EQUIPMENT SHALL BE IN ACCORDANCE WITH THE MANUFACTURER'S RECOMMENDATIONS AND SHALL BE CHECKED AND APPROVED BY A WELDING INSPECTOR.

AT THE BEGINNING OF EACH DAY'S WORK, A MINIMUM OF TWO TEST STUD WELDS SHALL BE MADE WITH THE EQUIPMENT TO BE USED TO METAL WHICH IS THE SAME THE ACTUAL WORK PIECE. THE TEST STUDS SHALL BE SUBJECTED TO A 30% BEND TEST BY STRIKING THEM WITH A HEAVY HAMMER. AFTER THE ABOVE TEST, THE WELD SECTION SHALL NOT EXHIBIT ANY TEARING OUR OR CRACKING.

TESTING OF END-WELDED STUDS SHALL BE IN ACCORDANCE WITH SECTION 2213A.2, PART 2, TITLE 24.

STRUCTURAL STEEL WELDING

1. ALL WELDING SHALL BE IN STRICT CONFORMANCE WITH THE LATEST EDITION OF AWS D1.1 AND THE 2013 CALIFORNIA BUILDING CODE.

2. ALL WELDING ELECTRODES (FILLER METAL) SHALL BE E7XXX (70 KSI), U.N.O., AND SHALL BE LOW HYDROGEN TYPES. FIELD WELDING OF FULL AND PARTIAL PENETRATION WELDS OF THE STEEL MOMENT FRAME CONNECTIONS BETWEEN MOMENT FRAME BEAMS AND MOMENT FRAME COLUMNS SHALL BE BY SHIELDED METAL ARC PROCESS USING LOW HYDROGEN ELECTRODES

3. ALL WELDS SHALL HAVE A FILLER METAL WITH CHARPY V-NOTCH TOUGHNESS OF 20 FT/LBS AVERAGE AT -20 DEGREES FAHRENHEIT AND 40 FT/LBS @ 70 DEGREES FAHRENHEIT. CERTIFY CONFORMANCE TO CHARPY V-NOTCH TOUGHNESS REQUIREMENTS WITH TESTS BY AN INDEPENDENT TESTING LABORATORY.

4. LENGTHS OF WELDS ARE EFFECTIVE LENGTHS AS SPECIFIED IN THE APPLICABLE CODE. WHERE LENGTH OF WELD IS NOT SHOWN IT SHALL BE FULL LENGTH OF JOINT. ALL BUTT WELDS SHALL BE FULL PENETRATION, UNLESS NOTED OTHERWISE.

5. CONTRACTOR SHALL PROVIDE FIELD WELDING AS REQUIRED FOR CONSTRUCTION. WHERE FIELD WELDING IS NOTED, THE DESIGNATION IS GIVEN AS A SUGGESTED CONSTRUCTION PROCEDURE ONLY.

6. ALL WELDERS SHALL BE QUALIFIED FOR THE WORK THEY WILL BE DOING & SHALL HAVE CURRENT CERTIFICATIONS BY AWS.

7. FACES OF FILLET WELDS EXPOSED TO VIEW SHALL HAVE AS-WELDED SURFACES THAT ARE REASONABLY SMOOTH AND UNIFORM. NO FINISHING OR GRINDING SHALL BE REQUIRED, EXCEPT WHERE CLEARANCES OR FIT OF OTHER ITEMS MAY SO NECESSITATE.

8. ALL PARTIAL AND FULL PENETRATION WELDS WHICH ARE EXPOSED TO VIEW SHALL BE GROUND SMOOTH AND FLUSH WITH FINISH SURFACE OF STEEL. HOLES SHALL BE FILLED WITH WELD METAL OR BODY SOLDER AND SMOOTHED BY GRINDING OR FILING.

9. CLEAN GROOVE PREPARATION THERMAL CUTS BY GRINDING.

10. WELDS SHALL BE TERMINATED AT THE END OF A JOINT IN A MANNER THAT WILL ENSURE SOUND WELDS. WHENEVER NECESSARY THIS SHALL BE DONE BY USE OF EXTENSION BARS AND RUN OFF TABS.

11. ALL WELDED JOINTS SHALL BE PRE-QUALIFIED PER THE LATEST EDITION OF AWS D1.1. NON PRE- QUALIFIED WELDED JOINTS SHALL BE QUALIFIED BY TEST & PROCEDURE QUALIFICATION TEST RECORD INCLUDED PER THE LATEST EDITION OF AWS D1.1.

12. THE CONTRACTOR SHALL SUBMIT ALL WELDING PROCEDURE SPECIFICATIONS (WPS) TO BE USED ON THE PROJECT PER THE LATEST EDITION OF AWS D1.1. THE WPS SHALL INCLUDE ALL MANUFACTURER'S DATA SHEETS FOR ALL WELDING MATERIALS TO BE USED. THE DATA SHEETS SHALL DESCRIBE THE PRODUCTS, LIMITATIONS OF USE, RECOMMENDED WELDING PARAMETERS, AND STORAGE AND EXPOSURE REQUIREMENTS.

13. ELECTRODES SHALL BE RECEIVED AND STORED IN THE ORIGINAL, UNDAMAGED MANUFACTURER PACKAGING, UNTIL READY FOR USE. WHEN WELDING IS TO BE SUSPENDED FOR MORE THAN 8 HOURS, ELECTRODES SHALL BE REMOVED FROM THE MACHINES AND STORED IN AN ELECTRODE WIRE OVEN MAINTAINED AT A TEMPERATURE BETWEEN 250 DEGREES AND 550 DEGREES OR AS RECOMMENDED BY THE MANUFACTURER. ELECTRODES NOT CONSUMED WITHIN 24 HOURS OF ACCUMULATED EXPOSURE OUTSIDE CLOSED OR HEATED STORAGE SHALL NOT BE USED.

14. ALL BOTTOM FLANGE BACKING BARS SHALL BE REMOVED. FOLLOWING REMOVAL OF BACKING, THE ROOT PASS SHALL BE BACKGOUGED TO SOUND WELD METAL AND BACKWELDED UNTIL FLUSH OR WITH SLIGHT REINFORCEMENT. THE SURFACE SHALL BE GROUND SMOOTH TO A SURFACE ROUGHNESS NOT TO EXCEED 500 MICROINCHES.

15. ALL WELDING SHALL BE SPECIFICALLY INSPECTED BY AN AWS-CW/ QUALIFIED INSPECTOR APPROVED BY DSA.

CONCRETE

1. CONCRETE IS REINFORCED AND CAST-IN-PLACE UNLESS OTHERWISE NOTED. WHERE REINFORCING IS NOT SPECIFICALLY SHOWN OR WHERE DETAILS ARE NOT GIVEN, PROVIDE REINFORCING SIMILAR TO THAT SHOWN FOR SIMILAR CONDITIONS, SUBJECT TO REVIEW BY THE OWNER'S REPRESENTATIVE.

2. ALL STRUCTURAL CONCRETE SHALL HAVE A MINIMUM COMPRESSIVE STRENGTH AT 28 DAYS AND A MAX WATER CEMENT RATIO W/C AS FOLLOWS:

   A. ALL CONCRETE U.N.O.: 3000 PSI NORMAL WEIGHT, W/C = 0.5

3. ALL STRUCTURAL CONCRETE MIXES SHALL DESIGNED BY AN APPROVED LABORATORY AND SHALL BE STAMPED AND SIGNED BY A CIVIL ENGINEER LICENSED IN CALIFORNIA.

4. CONCRETE MIXES SHALL BE PREPARED WITH TYPE II/V PORTLAND CEMENT CONFORMING TO ASTM C150. CONCRETE MIX DESIGNS CONTAINING FLY ASH MAY BE USED WHERE CONCRETE IS NOT VISUALLY EXPOSED. FLY ASH SHALL CONFORM WITH ASTM C618 AND MAY REPLACE UP TO 20% PORTLAND CEMENT BY VOLUME.

5. NORMAL WEIGHT CONCRETE AGGREGATES SHALL CONFORM TO ASTM C33. LIGHT WEIGHT CONCRETE AGGREGATES SHALL CONFORM TO ASTM C330.

6. NO MORE THAN ONE GRADE OF CONCRETE SHALL BE ON THE JOB SITE AT ANY ONE TIME.

7. THOROUGHLY CLEAN AND ROUGHEN ALL HARDENED CONCRETE AND MASONRY SURFACES TO RECEIVE NEW CONCRETE. INTERFACE SHALL BE ROUGHENED TO A FULL AMPLITUDE OF 1/4" UNLESS NOTED OTHERWISE.

8. KEY AND DOWEL POUR JOINTS AS SHOWN ON THE PLANS. ANY DEVIATION FROM POUR JOINTS SHOWN ON THE PLANS MUST BE APPROVED BY THE OWNER'S REPRESENTATIVE.

9. NON-SHRINK CEMENT GROUT SHALL HAVE A MINIMUM 28 DAY COMPRESSIVE STRENGTH OF 7000 PSI. USE "QUIKRETE" OR "RAPID SET".

10. DEFECTIVE CONCRETE (VOIDS, ROCK POCKETS, HONEYCOMBS, CRACKING, ETC.) SHALL BE REMOVED AND REPLACED AS DIRECTED BY THE OWNER'S REPRESENTATIVE.

STRUCTURAL STEEL

1. FABRICATION AND ERECTION OF STRUCTURAL STEEL SHALL BE IN ACCORDANCE WITH THE LATEST EDITION OF AISC SPECIFICATIONS FOR STRUCTURAL STEEL BUILDINGS, AND THE LATEST EDITION OF AISC SEISMIC PROVISIONS FOR STRUCTURAL STEEL BUILDINGS. WHERE THE STRUCTURAL STEEL IS EXPOSED, FABRICATION AND ERECTION SHALL ALSO BE IN ACCORDANCE WITH AISC CODE OF STANDARD PRACTICE FOR ARCHITECTURALLY EXPOSED STRUCTURAL STEEL.

2. STRUCTURAL STEEL SHALL CONFORM TO ASTM DESIGNATION AS INDICATED BELOW (U.N.O.):

A. ALL WIDE FLANGE SHAPES	A992, GRADE 50
B. STEEL ANGLES	A36
C. ALL PLATES	A572, GRADE 50
D. HSS (RECTANGULAR AND SQUARE)	A500, GRADE B
E. HSS (ROUND)	A500, GRADE B
F. PIPE COLUMNS	A53, GRADE B
G. CHANNELS (C AND MC SECTIONS)	A36
H. ALL OTHER STRUCTURAL SECTIONS	A572, GRADE 50
I. BOLTS	A307
ANCHOR BOLTS AT LOCATIONS OTHER THAN MOMENT FRAME COLUMN BASE PLATE	F1554, GR55
J. ANCHOR BOLTS AT MOMENT FRAME COLUMN BASE PLATE	F1554, GR105
K. THREADED RODS AND HANGER RODS	A36
L. NUTS FOR BOLTS AND MACHINE BOLTS	A563
M. HARDENED WASHERS	F436
N. UNHARDENED WASHERS	F844
O. PLAIN WASHERS	ANSI B18.22.1
P. BEVELED WASHERS	ANSI B18.23.1

3. WHEN FABRICATING BEAMS PLACE NATURAL CAMBER UP.

4. SPLICE MEMBERS ONLY WHERE INDICATED.

5. ALL BOLTED CONNECTIONS SHALL HAVE A MINIMUM OF TWO BOLTS UNLESS SHOWN OTHERWISE. MINIMUM SIZE OF BOLTS FOR STRUCTURAL STEEL CONNECTIONS SHALL BE 3/4" DIA. EXCEPT WHEN OTHERWISE SHOWN OR NOTED.

6. ALL HOLES SHALL BE STANDARD DIAMETER U.N.O.

7. ALL FLANGE STIFFENER PLATES SHALL BE ORIENTED SO THAT ROLLING DIRECTION OF PLATE IS PARALLEL WITH DIRECTION OF PRINCIPAL STRESS.

8. AFTER FABRICATION, ALL STEEL SHALL BE CLEANED FREE OF RUST, LOOSE MILL SCALE AND OIL.

9. PROVIDE FILLS AT SPLICES OF PARTS HAVING MORE THAN 1/8" DIFFERENCE IN THICKNESS.

10. PROVIDE BEVELED WASHERS ON ALL CONNECTIONS WHERE SLOPE SURFACE EXCEEDS 1:20.

11. HEADED ANCHOR STUDS AND THREADED STUDS SHALL BE NELSON GRANULAR FLUX-FILLED, AND SHALL BE MADE FROM COLD FINISHED LOW CARBON STEEL, CONFORMING TO A-108, GRADES 1015 - 1020 WITH A MINIMUM TENSILE STRENGTH OF 60,000 PSI. STUD WELDING INSPECTION AND TESTING SHALL CONFORM TO AWS D1.1.

12. DEFORMED BAR ANCHOR STUDS SHALL BE NELSON D2L GRANULAR FLUX-FILLED REBAR STUDS OR APPROVED EQUAL, AND SHALL BE MADE OF LOW CARBON COLD ROLLED STEEL WITH A MINIMUM TENSILE STRENGTH OF 80,000 PSI. STUD WELDING INSPECTION AND TESTING SHALL CONFORM TO AWS D1.1.

13. HOT DIP GALVANIZE IN ACCORDANCE WITH ASTM A123 AND ASTM A153 STRUCTURAL STEEL AND FASTENERS THAT ARE PERMANENTLY EXPOSED TO THE WEATHER. REPAIR GALVANIZING AFTER WELDING IN ACCORDANCE WITH ASTM A780.

14. THE FULL DESIGN AND LOAD CARRYING CAPACITY OF THE STEELWORK SHALL NOT BE IMPAIRED DUE TO FABRICATION, SHIPMENT, OR ERECTION PROCEDURES, THROUGHOUT THE COMPLETE PROCESS. THE STABILITY OF ALL INDIVIDUAL MEMBERS AND ASSEMBLIES SHALL BE MAINTAINED.

15. THE CONTRACTOR SHALL BE RESPONSIBLE FOR THE CONTROL OF ALL ERECTION PROCEDURES AND SEQUENCES WITH RELATION TO TEMPERATURE DIFFERENTIALS AND WELD SHRINKAGE.

16. ALL ADDITIONAL STEEL REQUIRED FOR ERECTION PURPOSES SHALL BE PROVIDED AT NO ADDITIONAL COST AND SHALL BE REMOVED UNLESS APPROVED BY THE OWNER'S REPRESENTATIVE IN WRITING.

CODE

1. BUILDING SHALL COMPLY WITH THE 2013 CALIFORNIA BUILDING WITH DSA AMEDMENTS.

2. VERTICAL LIVE LOADS:
   A. ROOF 20 PSF

3. LATERAL LOADS:
   A. WIND:
      BASIC WIND SPEED: 110 MPH
      WIND IMPORTANCE FACTOR, Iw: 1.0
      EXPOSURE TYPE: C

   B. SEISMIC FACTORS:
      Ss = 2.495 SI = 0.955
      SITE CLASS: D
      Fa = 1.0 Fv = 1.50
      SDS = 1.663 SDI = 0.955
      SEISMIC DESIGN CATEGORY E
      SEISMIC RISK CATEGORY II, I = 1.0

      Fp (MAX ROOFTOP W/ VIB ISOLATORS) = 2.5 Wp (LRFD)

4. LATERAL SYSTEM: EQUIPMENT ANCHORAGE.

GENERAL

1. ALL NEW CONSTRUCTION SHALL COMPLY WITH THE CONTRACT DOCUMENTS AND THE 2013 CALIFORNIA BUILDING CODE.

2. REFERENCE TO CODES, RULES, REGULATIONS, STANDARDS, MANUFACTURER'S INSTRUCTIONS OR REQUIREMENTS OF REGULATORY AGENCIES IS TO THE LATEST PRINTED EDITION OF EACH IN EFFECT AT THE DATE OF SUBMISSION OF BID UNLESS THE DOCUMENT DATE IS SHOWN.

3. TYPICAL DETAILS AND GENERAL NOTES APPLY TO ALL PARTS OF THE WORK EXCEPT WHERE SPECIFICALLY DETAILED OR UNLESS NOTED OTHERWISE (U.N.O.)

4. THE STRUCTURAL DRAWINGS ILLUSTRATE THE NEW STRUCTURAL MEMBERS. REFER TO ARCHITECTURAL, MECHANICAL AND ELECTRICAL DRAWINGS FOR NON-STRUCTURAL ITEMS WHICH REQUIRE SPECIAL PROVISIONS DURING THE CONSTRUCTION OF THE STRUCTURAL MEMBERS.

5. REFER TO ARCHITECTURAL DRAWINGS FOR FLOOR DEPRESSIONS, EDGE OF SLAB, OPENINGS, SLOPES, DRAINS, CURBS, PADS, EMBEDDED ITEMS, NON-BEARING PARTITIONS, ETC. REFER TO MECHANICAL AND ELECTRICAL DRAWINGS FOR SLEEVES, OPENINGS, AND HANGERS FOR PIPES, DUCTS AND EQUIPMENT.

6. THE CONTRACTOR SHALL VERIFY AND BE RESPONSIBLE FOR COORDINATING THE WORK OF ALL TRADES AND SHALL VERIFY ALL DIMENSIONS AND CONDITIONS WHICH IMPACT THE WORK. FIELD VERIFY SIZES, ELEVATIONS, HOLE LOCATIONS, ETC. PRIOR TO FABRICATION.

7. DRAWING DIMENSIONS ARE TO FACE OF STRUCTURE, JOINT CENTERLINE OR COLUMN GRID CENTERLINE UNLESS NOTED OTHERWISE. DO NOT SCALE THE DRAWINGS.

8. CONTRACTOR SHALL CAREFULLY REVIEW THE DRAWINGS TO IDENTIFY THE SCOPE OF WORK REQUIRED. VISIT THE SITE TO RELATE THE SCOPE OF WORK TO EXISTING CONDITIONS AND DETERMINE THE EXTENT TO WHICH THOSE CONDITIONS AND PHYSICAL SURROUNDINGS WILL IMPACT THE WORK.

9. EXISTING CONDITIONS AS SHOWN ON THESE PLANS ARE FOR REFERENCE ONLY. CONTRACTOR IS REQUIRED TO FIELD VERIFY ALL EXISTING CONDITIONS PRIOR TO CONSTRUCTION. CONTRACTOR SHALL REPORT CONDITIONS THAT CONFLICT WITH THE CONTRACT DOCUMENTS TO THE OWNER'S REPRESENTATIVE. DO NOT DEVIATE FROM THE CONTRACT DOCUMENTS WITHOUT WRITTEN DIRECTION FROM THE OWNER'S REPRESENTATIVE.

10. THE CONTRACTOR SHALL RESOLVE ANY CONFLICTS ON THE DRAWINGS OR IN THE SPECIFICATIONS WITH THE OWNER'S REPRESENTATIVE BEFORE PROCEEDING WITH THE WORK.

11. ANY DEVIATION, MODIFICATION & SUBSTITUTION FROM THE APPROVED SET OF STRUCTURAL DRAWINGS SHALL BE SUBMITTED TO THE OWNER'S REPRESENTATIVE FOR REVIEW/APPROVAL PRIOR TO ITS USE OR INCLUSION ON THE SHOP DRAWINGS & PRIOR TO PROCEEDING WITH THE WORK.

12. THE CONTRACTOR SHALL PROVIDE ALL NECESSARY SHORES, BRACES, GUYS, HOIST BEAM, REQUIRED TO SUPPORT ALL LOADS TO WHICH THE BUILDING STRUCTURE AND COMPONENTS, SOILS, OTHER STRUCTURES AND UTILITIES MAY BE SUBJECTED DURING CONSTRUCTION. SHORING SYSTEMS SHALL BE DESIGNED AND STAMPED BY A CIVIL ENGINEER LICENSED IN THE STATE OF CALIFORNIA. VISITS TO THE SITE BY THE OWNER'S REPRESENTATIVE WILL NOT INCLUDE OBSERVATION OF THE ABOVE NOTED ITEMS.

13. THE CONTRACTOR SHALL PROVIDE MEANS, METHOD, TECHNIQUES, SEQUENCE AND PROCEDURE OF CONSTRUCTION AS REQUIRED. SITE VISITS PERFORMED BY THE OWNER'S REPRESENTATIVE DO NOT INCLUDE INSPECTIONS OF MEANS AND METHODS OF CONSTRUCTION PERFORMED BY CONTRACTOR.

14. THE CONTRACTOR SHALL PROTECT ALL WORK, MATERIALS AND EQUIPMENT FROM DAMAGE AND SHALL PROVIDE PROPER STORAGE FACILITIES FOR MATERIALS AND EQUIPMENT DURING CONSTRUCTION.

15. NEW MEP UNITS WITH OPERATIONAL WEIGHT:
    A. OVER 400 LBS FLOOR OR ROOF MOUNTED
    B. OVER 20 LBS WALL OR CEILING MOUNTED
    SHOULD BE NOTED ON THESE DRAWINGS. CONTRACTOR SHALL NOTIFY THE STRUCTURAL ENGINEER OF ANY ADDITIONAL EQUIPMENT AND PROVIDE CUT SHEET.

16. STRUCTURAL OBSERVATIONS PERFORMED BY ENGINEER DURING CONSTRUCTION ARE NOT THE CONTINUOUS AND SPECIAL INSPECTION SERVICES AND DO NOT WAIVE THE RESPONSIBILITY FOR THE INSPECTIONS REQUIRED OF THE BUILDING INSPECTOR OR THE DEPUTY INSPECTOR. OBSERVATIONS ALSO DO NOT GUARANTEE CONTRACTOR'S PERFORMANCE AND SHALL NOT BE CONSIDERED AS SUPERVISION OF CONSTRUCTION.

17. ALLOW FOURTEEN WORKING DAYS FOR PROCESSING SHOP DRAWINGS AND SUBMITTALS AFTER RECEIPT.

MECHANICAL AND ADHESIVE ANCHORS

1. ADHESIVE ANCHORS AND DOWELS INSTALLED INTO CONCRETE:
   A. "SET-XP" BY SIMPSON STRONG TIE (ESR#2508)
   B. "HIT-RE 500-SD" BY HILTI, INC. (ESR#2322)

2. MECHANICAL ANCHORS INSTALLED INTO CONCRETE:
   A. "STRONG BOLT2" BY SIMPSON STRONG-TIE (ESR#3037)
   B. "KWIK BOLT TZ" BY HILTI, INC. (ESR#1917)

5. ADHESIVE ANCHORS: ASTM A36 THREADED RODS WITH ASTM A 563 GRADE A NUTS AND ANSI B18.22.1 TYPE A WASHERS, UNLESS OTHERWISE NOTED. ANCHORS DESIGNATED AS ASTM A193 GRADE B7 THREADED RODS TO USE ASTM A 563 GRADE DH HEAVY HEX NUTS AND ASTM F 436 WASHERS.

6. ADHESIVE DOWELS: ASTM A615 GRADE 60 REINFORCING STEEL.

7. ALL ANCHORS SHALL BE INSTALLED IN ACCORDANCE WITH ICC-ES REPORT AND MANUFACTURERS RECOMMENDATIONS.

8. UNLESS OTHERWISE NOTED, PROVIDE MINIMUM EMBEDMENT OF ANCHORS PER ICC-ES REPORT, COLA REPORTS & MANUFACTURERS RECOMMENDATIONS.

9. CONFIRM FINAL ANCHOR LOCATIONS PRIOR TO FABRICATING PLATES, MEMBERS, OR OTHER STEEL ASSEMBLIES ATTACHED WITH MECHANICAL OR ADHESIVE ANCHORS. AT CONTRACTOR OPTION, OVERSIZED HOLES AND WELDED PLATE WASHERS CAN BE USED IN LIEU OF STANDARD DIAMETER HOLES. SIZE & WELD

10. PRIOR TO ALL DRILLING OR CORING, THE CONTRACTOR SHALL (1) VERIFY THE EXISTING CONCRETE OR MASONRY THICKNESS TO PREVENT DAMAGE TO THE OPPOSITE FACE OF CONCRETE AND MAINTAIN 1-1/2" CLEAR COVER U.N.O., AND (2) IDENTIFY EXISTING REINFORCING LOCATIONS BY PACHHOMETER, PROBING, CHIPPING, ETC. TO AVOID DAMAGE EXISTING REINFORCING.

11. IF REINFORCEMENT IS ENCOUNTERED DURING DRILLING, ABANDON AND SHIFT THE HOLE LOCATION TO AVOID THE REINFORCEMENT. PROVIDE A MINIMUM OF 2 ANCHOR DIAMETERS OR 1 INCH, WHICHEVER IS LARGER, OF SOUND CONCRETE BETWEEN THE DOWEL AND THE ABANDONED HOLE. FILL THE ABANDONED HOLE WITH NON-SHRINK GROUT. IF THE ANCHOR OR DOWEL MAY NOT BE SHIFTED AS NOTED ABOVE, THE ENGINEER WILL DETERMINE A NEW LOCATION.

J & S CONSULTING ENGINEERS, INC.
ELECTRICAL - MECHANICAL
FIRE PROTECTION
3111 Winona Ave., #102
Burbank, Ca 91504
Tel.: (818) 841-0303
Fax: (818) 841-8531
624 Moorpark Road,
Moorpark, CA 93021
Tel.: (805) 523-1700
Fax: (805) 523-1702
www.jandsconsulting.com
E-Mail: jsmail@jandsconsulting.com

PROJECT No. 45461

LICENSED ARCHITECT JEAN ANN AMADOR C-22205 APRIL 30, 2017 RENEWAL DATE STATE OF CALIFORNIA

REGISTERED PROFESSIONAL ENGINEER WILL A. LAMBERT No. 5430 Exp. 06/30/2018 STRUCTURAL STATE OF CALIFORNIA
DATE OF SIGNING: 05/12/2017

Orion Structural

ORION STRUCTURAL GROUP, INC.
East Thousand Oaks Boulevard, Suite 304
Thousand Oaks, California 91360 - 7734
TEL: (805) 390-9242 FAX: (805) 494-0418

ORION PROJECT # 14712

VENTURA COLLEGE
4667 TELEGRAPH ROAD, VENTURA, CALIFORNIA, 93003
VENTURA COUNTY COMMUNITY COLLEGE DISTRICT
MATH & SCIENCE COMPLEX

IDENTIFICATION STAMP
DIV. OF THE STATE ARCHITECT
OFFICE OF REGULATION SERVICES
APPL. 03-117754
AC ✓ FLS ___ SS ___
DATE JUL 05 2017

NO.	DATE	DESCRIPTION	BY
	12.19.16	DSA SUBMITTAL	

REVISIONS

DRAWN BY:	MG
CHECKED BY:	WL
DATE:	05/12/2017
JOB NO:	14712

SHEET TITLE
GENERAL NOTES

SHEET
S-0.0

FASTENING SCHEDULE
2013 CBC, TABLE 2304.9.1

CONNECTION	FASTENING (a,m)	LOCATION
1. JOIST TO SILL OR GIRDER	(3) 8d COMMON (2 ½" X 0.131") (3) 3" X 0.131" NAILS	TOE NAIL
2. BRIDGING TO JOIST	(2) 8d COMMON (2 ½" X 0.131") (2) 3" X 0.131" NAILS	TOE NAIL EACH END
3. 1"X6" SUBFLOOR OR LESS TO EACH JOIST	(2) 8d COMMON (2 ½" X 0.131")	FACE NAIL
4. WIDER THAN 1"X6" SUBFLOOR TO EACH JOIST	(3) 8d COMMON (2 ½" X 0.131")	FACE NAIL
5. 2" SUBFLOOR TO JOIST OR GIRDER	(2) 16d COMMON (3 ½" X 0.162")	BLIND AND FACE NAIL
6. SOLE PLATE TO JOIST OR BLOCKING	16d (3 ½" X 0.135") AT 16" O.C. 3" X 0.131" NAIL AT 8" O.C.	TYPICAL FACE NAIL
SOLE PLATE TO JOIST OR BLOCKING AT BRACED WALL PANEL	(3) 16d (3 ½" X 0.135") AT 16" (4) 3" X 0.131" NAILS AT 16" O.C.	BRACED WALL PANELS
7. TOP PLATE TO STUD	(2) 8d COMMON (2 ½" X 0.131") (2) 3" X 0.131" NAILS	END NAIL
8. STUD TO SOLE PLATE	(4) 8d COMMON (2 ½" X 0.131") (4) 3" X 0.131" NAILS	TOE NAIL
	(2) 16d COMMON (3 ½" X 0.162") (3) 3" X 0.131" NAILS	END NAIL
9. DOUBLE STUDS	16d (3 ½" X 0.135") AT 24" O.C. (3) 3" X 0.131" NAILS AT 8" O.C.	FACE NAIL
10. DOUBLE TOP PLATES	16d (3 ½" X 0.131") AT 16" O.C. (3) 3" X 0.131" NAILS AT 12" O.C.	TYPICAL FACE NAIL
DOUBLE TOP PLATES	(8) 16d COMMON (3 ½" X 0.162") (12) 3" X 0.131" NAILS	LAP SPLICE
11. BLOCKING BETWEEN JOIST OR RAFTERS TO TOP PLATE	(3) 8d COMMON (2 ½" X 0.131") (3) 3" X 0.131" NAILS	TOE NAIL
12. RIM JOIST TO TOP PLATE	8d COMMON (2 ½" X 0.131") AT 6" O.C. (3) 3" X 0.131" NAIL AT 6" O.C.	TOE NAIL
13. TOP PLATES, LAPS AND INTERSECTIONS	(2) 16d COMMON (3 ½" X 0.162") (3) 3" X 0.131" NAILS	FACE NAIL
14. CONTINUOUS HEADER, TWO PIECES	16d COMMON (3 ½" X 0.162")	16" O.C. ALONG EDGE
15. CEILING JOIST TO PLATE	(3) 8d COMMON (2 ½" X 0.131") (5) 3" X 0.131" NAILS	TOE NAIL
16. CONTINUOUS HEADER TO STUD	(4) 8d COMMON (2 ½" X 0.131")	TOE NAIL
17. CEILING JOISTS, LAPS OVER PARTITIONS (SEE SECTION 2308.10.4.1, TABLE 2308.10.4.1)	(3) 16d COMMON (3 ½" X 0.162") MINIMUM, TABLE 2308.10.4.1 (4) 3" X 0.131" NAILS	FACE NAIL
18. CEILING JOISTS TO PARALLEL RAFTER (SEE SECTION 2308.10.4.1, TABLE 2308.10.4.1)	(3) 16d COMMON (3 ½" X 0.162") MINIMUM, TABLE 2308.10.4.1 (4) 3" X 0.131" NAILS	FACE NAIL
19. RAFTER TO PLATE (SEE SECTION 2308.10.1, TABLE 2308.10.1)	(3) 8d COMMON (2 ½" X 0.131") (3) 3" X 0.131" NAILS	TOE NAIL
20. 1" DIAGONAL BRACE TO EACH STUD AND PLATE.	(2) 8d COMMON (2 ½"X 0.131") (2) 3" X 0.131" NAILS	FACE NAIL
21. 1" X 8" SHEATHING TO EACH BEARING	(3) 8d COMMON (2 ½" X 0.131")	FACE NAIL
22. WIDER THAN 1" X 8" SHEATHING TO EACH BEARING	(3) 8d COMMON (2 ½" X 0.131")	FACE NAIL
23. BUILT UP CORNER STUDS	16d COMMON (3 ½" X 0.162") 3" X 0.131" NAILS	24" O.C. 16" O.C.

FASTENING SCHEDULE (CONT.)
2013 CBC, TABLE 2304.9.1

CONNECTION	FASTENING (a,m)	LOCATION
24. BUILT UP GIRDER AND BEAMS	20d COMMON (4" X 0.192") 32" O.C. 3" X 0.131" NAILS AT 24" O.C. (2) 20d COMMON (4" X 0.192") (3) 3" X 0.131" NAILS	FACE NAIL AT TOP AND BOTTOM STAGGERED ON OPPOSITE SIDES FACE NAIL AT ENDS AND AT EACH SPLICE
25. 2" PLANKS	16d COMMON (3 ½" X 0.162")	AT EACH BEARING
26. COLLAR TIE TO RAFTER	(3) 10d COMMON (3" X 0.148") (4) 3" X 0.131" NAILS	FACE NAIL
27. JACK RAFTER TO HIP	(3) 10d COMMON (3" X 0.148") (4) 3" X 0.131" NAILS	TOE NAIL
	(2) 16d COMMON (3 ½" X 0.162") (3) 3" X 0.131" NAILS	FACE NAIL
28. ROOF RAFTER TO 2X RIDGE BEAM	(2) 16d COMMON (3" X 0.148") (4) 3" X 0.131" NAILS	TOE NAIL
	(2) 16d COMMON (3 ½" X 0.162") (3) 3" X 0.131" NAILS	FACE NAIL
29. JOIST TO BAND JOIST	16d COMMON (3 ½" X 0.162") (4) 3" X 0.131" NAILS	FACE NAIL
30. LEDGER STRIP	(3) 16d COMMON (3 ½" X 0.162") (4) 3" X 0.131" NAILS	FACE NAIL
31. WOOD STRUCTURE PANELS AND PARTICLE–BOARD (b) SUBFLOOR, ROOF AND WALL SHEATHING (TO FRAMING)	½" AND LESS 6d (c.i.) (2) ⅜" X 0.13" NAIL (n)	
	19/32" TO ¾" 8d (d) OR 6d (e) (2) ⅜" X 0.113" NAIL (p)	
	⅞" TO 1" 8d (c)	
	1 ⅛" TO 1 ¼" 10d (d) OR 8d (d)	
	¾" AND LESS 6d (e)	
	⅞" TO 1" 8d (e)	
	1 ⅛" TO 1 ¼" 10d (d) OR 8d (e)	
32. PANEL SIDING (TO FRAMING)	½" AND LESS 6d (f)	
	⅝" 8d (f)	
33. FIBERBOARD SHEATHING (g)	½" NO. 11 GAGE ROOFING NAIL (h) 6d COMMON NAIL (2" X 0.113")	
	25/32" NO. 11 GAGE ROOFING NAIL (h) 8d COMMON NAIL (2-1/2" X 0.131")	
34. INTERIOR PANELING	¾" 4d (j)	
	⅜" 6d (k)	

FOR SI: 1 INCH = 25.4 mm

(a) COMMON OR BOX NAILS ARE PERMITTED TO BE USED EXCEPT WHERE OTHERWISE STATED.

(b) NAILS SPACED AT 6 INCHES ON CENTER AT EDGES, 12" INCHES AT INTERMEDIATE SUPPORTS EXCEPT 6 INCHES AT SUPPORTS WHERE SPANS ARE 48 INCHES OR MORE. FOR NAILING OF WOOD STRUCTURAL PANELS AND PARTICLE BOARD DIAGRAMS AND SHEAR WALLS REFER TO SECTION 2305. NAILS FOR WALL SHEATHING ARE PERMITTED TO BE COMMON, BOX OR CASING.

(c) COMMON OR DEFORMED SHANK (6d – 2"X0.113"; 8d – 2½"X0.131"; 10d – 3"X0.148")

(d) COMMON (6d – 2"X0.113"; 8d – 2 1/2"X0.131"; 10d – 3"X0.148")

(e) DEFORMED SHANK (6d – 2"X0.113"; 8d–2½"X0.131"; 10d – 3"X0.148").

(f) CORROSION–RESISTANT SIDING (6d – 1⅞"X0.106"; 8d – 2⅜"X0.128") OR CASING (6d – 2" X 0.099"; 8d – 2½"X0.113") NAIL.

(g) FASTENERS SPACED 3 INCHES ON CENTER AT EXTERIOR EDGES AND 6 INCHES ON CENTER AT INTERMEDIATE SUPPORTS, WHEN USED AS STRUCTURAL SHEATHING. SPACING SHALL BE 6 INCHES ON CENTER ON THE EDGES AND 12 INCHES ON CENTER AT INTERMEDIATE SUPPORTS FOR NON–STRUCTURAL APPLICATIONS.

(h) CORROSION–RESISTANT ROOFING NAILS WITH ⅞ INCH DIAMETER HEAD AND 1–1/2 INCH LENGTH FOR ½" SHEATHING AND 1–3/4 INCH LENGTH FOR 25/32 INCH SHEATHING.

(i) CORROSION RESISTANT STAPLES WITH NORMAL ⅞ INCH CROWN AND 1 –1/8 INCH LENGTH FOR 1/2 INCH SHEATHING AND 1–1/2 INCH LENGTH FOR 25/32 INCH SHEATHING. PANEL SUPPORTS AT 16 INCHES (20 INCHES IF STRENGTH AXIS IN THE LONG DIRECTION OF THE PANEL, UNLESS OTHERWISE MARKED).

(j) CASING (1–1/2" X 0.080") OR FINISH (1–1/2" X 0.072") NAILS SPACED 6 INCHES ON PANEL EDGES, 12 INCHES AT INTERMEDIATE SUPPORTS.

(k) PANEL SUPPORTS AT 24 INCHES. CASING OF FINISH NAILS SPACED 6 INCHES ON PANEL EDGES, 12 INCHES AT INTERMEDIATE SUPPORTS.

(l) FOR ROOF SHEATHING APPLICATIONS, 8d NAILS (2–1/2" X 0.113") ARE THE MINIMUM REQUIRED FOR WOOD STRUCTURAL PANELS.

(m) STAPLES SHALL HAVE A MINIMUM CROWN WIDTH OF 7/16 INCH.

(n) FOR ROOF SHEATHING APPLICATIONS, FASTENERS SPACED 4 INCHES ON CENTER AT EDGES, 8 INCHES AT INTERMEDIATE SUPPORTS.

(o) FASTENERS SPACED 4 INCHES ON CENTER AT EDGES, 8 INCHES AT INTERMEDIATE SUPPORTS FOR SUBFLOOR AND WALL SHEATHING AND 3 INCHES ON CENTER AT EDGES, 6 INCHES AT INTERMEDIATE SUPPORTS FOR ROOF SHEATHING.

(p) FASTENERS SPACED 4 INCHES ON CENTER AT EDGES, 8 INCHES AT INTERMEDIATE SUPPORTS.

GLUE–LAMINATED LUMBER

1. THE MANUFACTURE OF STRUCTURAL GLUE–LAMINATED TIMBER SHALL COMPLY WITH THE REQUIREMENTS OF CODE CHAPTER 23 DIVISION VI. ALL FABRICATION AND WORKMANSHIP SHALL BE IN CONFORMANCE WITH THE CURRENT OF THE "STANDARD SPECIFICATIONS FOR STRUCTURAL GLUE–LAMINATED DOUGLAS FIR (COAST REGION) LUMBER" BY THE WEST COAST LUMBERMAN'S ASSOCIATION AND THE CURRENT EDITION OF "TIMBER CONSTRUCTION STANDARDS" BY THE AMERICAN INSTITUTE OF TIMBER CONSTRUCTION.

2. ALL GLUE–LAMINATED MEMBERS SHALL BE FABRICATED IN A SHOP LICENSED BY THE CITY AND SHALL BE DOUGLAS FIR AND WESTERN LARCH COMBINATION 24F–V8 WITH WATERPROOF RESORCINOL OR PHENOL RESORCINOL GLUE CONFORMING TO UBC STANDARD NO. 25–10. ALLOWABLE STRESS REQUIREMENTS ARE AS FOLLOWS:

A. Fbxx = 2400 PSI (TENSION IN TENSION ZONE & TENSION IN COMPRESSION ZONE)
B. Fc⊥xx = 650 PSI (TENSION FACE & COMPRESSION FACE)
C. Fvxx = 265 PSI
D. Exx = 1.8x10e6 PSI

3. ALL GLU–LAMINATED MEMBERS SHALL BE ARCHITECTURAL GRADE AS SPECIFIED ON ARCH'L DRAWINGS.

4. THE MANUFACTURER SHALL SUBMIT COMPLETE SHOP DRAWINGS TO THE OWNER'S REPRESENTATIVE FOR APPROVAL PRIOR TO ANY FABRICATION.

5. GLUED–LAMINATED BEAMS (GLB) (ICC ESR–2364, LARR 25565) SHALL BE DOUGLAS FIR–LARCH WITH 24F–V8 GRADE. PROVIDE CAMBER WHERE INDICATED ON DRAWINGS. CITY OF LOS ANGELES BUILDING DEPARTMENT LICENSED FABRICATOR IS REQUIRED FOR GLUED–LAMINATED BEAMS.

FRAMING LUMBER

1. PROVIDE GRADE–MARKED DOUGLAS FIR STRUCTURAL LUMBER COMPLYING WITH STANDARD GRADING RULE NUMBER 16 OF THE WEST COAST LUMBER INSPECTION BUREAU. PROVIDE 'S' DRY LUMBER WITH A 19% MAX. MOISTURE CONTENT. WOOD JOISTS AND BEAMS WITH MORE THAN 2 FRAMED LEVELS ABOVE THEM SHALL BE MC15 (15% MOISTURE MAX. LUMBER).

2. ALL LUMBER SHALL BE STRESS GRADED DOUGLAS FIR NO. 2, UNLESS NOTED OTHERWISE. ALL 4x10 BEAMS OR LARGER AND 6x8 BEAMS OR LARGER SHALL BE DOUGLAS FIR NO. 1.

3. ALL LUMBER IN DIRECT CONTACT WITH CONCRETE OR MASONRY, INCLUDING BUT NOT LIMITED TO FOUNDATION SILLS, SHALL BE NATURALLY DURABLE OR PRESERVATIVE–TREATED DOUGLAS FIR.

4. WOOD STRUCTURAL PANELS SHALL COMPLY WITH U.S. PRODUCT STANDARDS FOR ITS TYPE IN PS 1–09 OR PS 2–10 AND BE CLASSIFIED AS EXPOSURE 1. AS A MINIMUM ALL WOOD STRUCTURAL PANELS SHALL BE APA RATED SHEATHING UNLESS NOTED OTHERWISE ON PLANS AND DETAILS. PANEL CONSTRUCTION FOR ALL WOOD STRUCTURAL PANELS SHALL BE 5 PLY PLYWOOD, EXCEPT THAT OSB IS PERMITTED FOR WALL SHEATHING. ALL WOOD STRUCTURAL PANELS SHALL BE BLOCKED AT UNSUPPORTED EDGES. WALL PANELS SHALL BE 15/32 INCH, PANEL INDEX (P.I.) 32/16 U.N.O. ALL WOOD STRUCTURAL PANELS MUST BE INSTALLED WITH FACE GRAIN PERPENDICULAR TO SUPPORTS.

5. ALL NAILS SHALL BE COMMON WIRE NAILS. NAILING TO BE IN ACCORDANCE WITH CBC 2016 NAILING SCHEDULE UNLESS NOTED OTHERWISE. 1½" OF PENETRATION FOR 10d AND 16d IS REQUIRED. PENETRATION IS MEASURED INTO THE PIECE RECEIVING THE NAILPOINT. ALL NAILS SHALL BE GALVANIZED WHEN EXPOSED TO WEATHER. PREDRILL ALL NAILS 20d OR LARGER.

6. LAG SCREWS SHALL BE TURNED, NOT DRIVEN, INTO PRE DRILLED HOLES. PROVIDE LEAD HOLE 40% TO 70% OF THREADED SHANK DIAMETER AND FULL DIAMETER FOR SMOOTH SHANK PORTION.

7. ALL FRAMING HARDWARE SHALL BE STRONG–TIE CONNECTORS AS MANUFACTURED BY SIMPSON STRONG–TIE COMPANY, UNLESS NOTED OTHERWISE. INSTALL PER MANUFACTURER'S RECOMMENDATIONS AND ICC REQUIREMENTS. ALL BOLTS IN HOLD–DOWN ANCHORS SHALL BE TORQUED PER MANUFACTURERS REQUIREMENTS.

8. INSTALL HOLD DOWNS ½ INCH MINIMUM ABOVE THE PLATE TO ALLOW FOR TIGHTENING ANCHOR BOLT. THE HOLD DOWN SHALL BE INSTALLED TIGHT TO THE POST WITHOUT FILLERS OR DAPPING. DO NOT BEND HOLD DOWN ANCHORS. HOLD DOWN HARDWARE SHALL BE IN PLACE PRIOR TO FOUNDATION INSPECTION. HOLD DOWN SHALL BE FINGER TIGHT AND ⅓ WRENCH TURN JUST PRIOR TO COVERING THE WALL FRAMING. UPPER FLOOR HOLD DOWNS SHALL BE CONTINUED TO THE FOUNDATION PER TYPICAL DETAILS.

9. ALL BOLTS IN WOOD SHALL BE A–307 STANDARD BOLTS. HOLES SHALL NOT BE MORE THAN 1/16" LARGER THAN THE BOLT DIAMETER.

10. DO NOT CUT, BORE, COUNTERSINK OR NOTCH WOOD MEMBERS EXCEPT WHERE SHOWN IN THE DETAILS.

11. PROVIDE DOUBLE JOISTS BENEATH ALL PARALLEL WALLS. PROVIDE SOLID BLOCK BENEATH ALL WALLS PERPENDICULAR TO JOISTS.

12. JOISTS OR RAFTERS FRAMING FROM OPPOSITE SIDES OF BEAMS OR WALLS SHALL HAVE A LAP OF 4" OR MORE AND BE SPLICED WITH 4–16D NAILS, UNLESS NOTED OTHERWISE.

13. ENGINEERED LUMBER

A. I–JOIST MEMBERS SHALL BE "TJI" JOISTS MANUFACTURED BY "WEYERHAEUSER" (ICC–ESR 1153, L.A. RR 25538). EQUIVALENT I–JOISTS MANUFACTURED BY "ROSEBURG" WILL BE ALLOWED (ICC–ESR 1251, LARR 25439).
B. LSL MEMBERS SHALL BE "TIMBERSTRAND" LSL MANUFACTURED BY "WEYERHAEUSER" (ICC–ESR1387, COLA RR25202). LSL SHALL BE GRADE 1.55E.
C. LVL MEMBERS SHALL BE "RIGIDLAM" LVL MANUFACTURED BY ROSEBURG (ICC–ESR 1210, COLA RR#25680). 1½" TO 1¾" WIDE RIGIDLAM BEAMS SHALL BE GRADE 2.0E. 3½" RIGIDLAM AND WIDER SHALL BE GRADE 2.2E.
D. "RIGIDRIM" SHALL BE MANUFACTURED BY "ROSEBURG" (ICC–ESR 1210, COLA RR#25680)
E. PROVIDE CAMBER WHERE INDICATED ON DRAWINGS
F. ALL JOISTS & BEAMS SHALL BE MANUFACTURED BY A LICENSED FABRICATOR.

14. HOT DIP GALVANIZED FASTENERS SUCH AS – BUT NOT LIMITED TO – NAILS, SCREWS, BOLTS, THREADED ROD, ETC., SHALL BE USED WHEN IN CONTACT WITH PRESERVATIVE OR FIRE RETARDANT TREATED LUMBER. EXCEPTION: PLAIN CARBON STEEL FASTENERS IN SBX/DOT AND ZINC BORATE PRESERVATIVE–TREATED WOOD IN AN INTERIOR, DRY ENVIRONMENT SHALL BE PERMITTED.

15. FRAMING CLIPS TO COMPLY WITH (IAPMO ER 0112 2606, L.A. RR 25814). STRAPS TO COMPLY WITH (ICC–ESR 2105, L.A. RR 25713).

16. NARROW STEEL SHEAR PANELS SHALL BE INSTALLED PER THE MANUFACTURERS RECOMMENDATIONS AND CONFORM TO THE FOLLOWING: HARDY FRAMES (HFX): LARR#25759 SIMPSON STRONG WALLS (SSW): LARR#25625

17. WHERE WOOD MEMBERS ARE TO BE CONNECTED TO STEEL ELEMENTS, AS A MINIMUM PROVIDE 2x NAILERS W/ 5/8"Ø WELDED THREADED STUDS @ 24" O.C. IF THE THREADED STUDS NEED TO BE COUNTERSUNK FOR FINISH INSTALLATION, INSTALL 3x NAILERS.

18. GLUE BETWEEN WOOD STRUCTURAL PANELS AND WOOD FRAMING MEMBERS SHALL BE APPLIED TO REDUCE SQUEAKINESS OF OCCUPIABLE SPACES. GLUE SHALL CONFORM TO APA PERFORMANCE SPECIFICATION AFG–01 OR ASTM D3498. INSTALL AS DIRECTED PER APA FORM NO. Q300P.

19. PRIOR TO COVERING WITH ANY FINISHING MATERIAL RETIGHTEN BOLTS BEFORE CLOSING IN.

J & S CONSULTING ENGINEERS, INC.
ELECTRICAL • MECHANICAL
FIRE PROTECTION
3111 Winona Ave., #102
Burbank, Ca 91504
Tel.: (818) 841–0303
Fax: (818) 841–8531
624 Moorpark Road,
Moorpark, CA 93021
Tel.: (805) 523–1700
Fax: (805) 523–1702
www.jandsconsulting.com
E–Mail: jsmail@jandsconsulting.com

PROJECT No. 45461

LICENSED ARCHITECT — No. C–22205 — APRIL 30, 2017 RENEWAL DATE — STATE OF CALIFORNIA

REGISTERED PROFESSIONAL ENGINEER — No. 5430 — Exp. 06/30/2018 — STRUCTURAL — STATE OF CALIFORNIA

DATE OF SIGNATURE: 05/12/2017

Orion Structural
ORION STRUCTURAL GROUP, INC.
East Thousand Oaks Boulevard, Suite 304
Thousand Oaks, California 91360 – 7734
TEL.: (805) 390–9242 FAX: (805) 494–0418

ORION PROJECT # 14712

VENTURA COLLEGE
4667 TELEGRAPH ROAD, VENTURA, CALIFORNIA, 93003
VENTURA COUNTY COMMUNITY COLLEGE DISTRICT
MATH & SCIENCE COMPLEX

IDENTIFICATION STAMP
DIV. OF THE STATE ARCHITECT
OFFICE OF REGULATION SERVICES
APPL. 03–117754
AC ___ FLS ___
DATE JUL 05 2017

NO.	DATE	DESCRIPTION	BY
	12.19.16	DSA SUBMITTAL	

REVISIONS

DRAWN BY: MG
CHECKED BY: WL
DATE: 05/12/2017
JOB NO: 14712

SHEET TITLE

GENERAL NOTES

SHEET

S-0.1

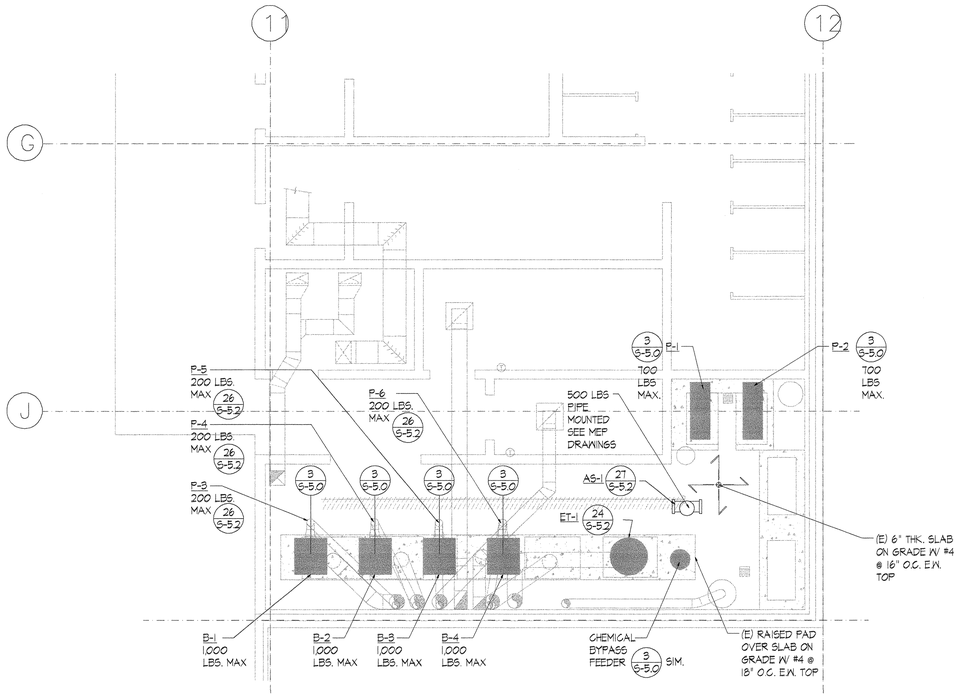

2 BUILDING "C" MECHANICAL ROOM 129 PLAN

SCALE: 1/4"=1'-0"

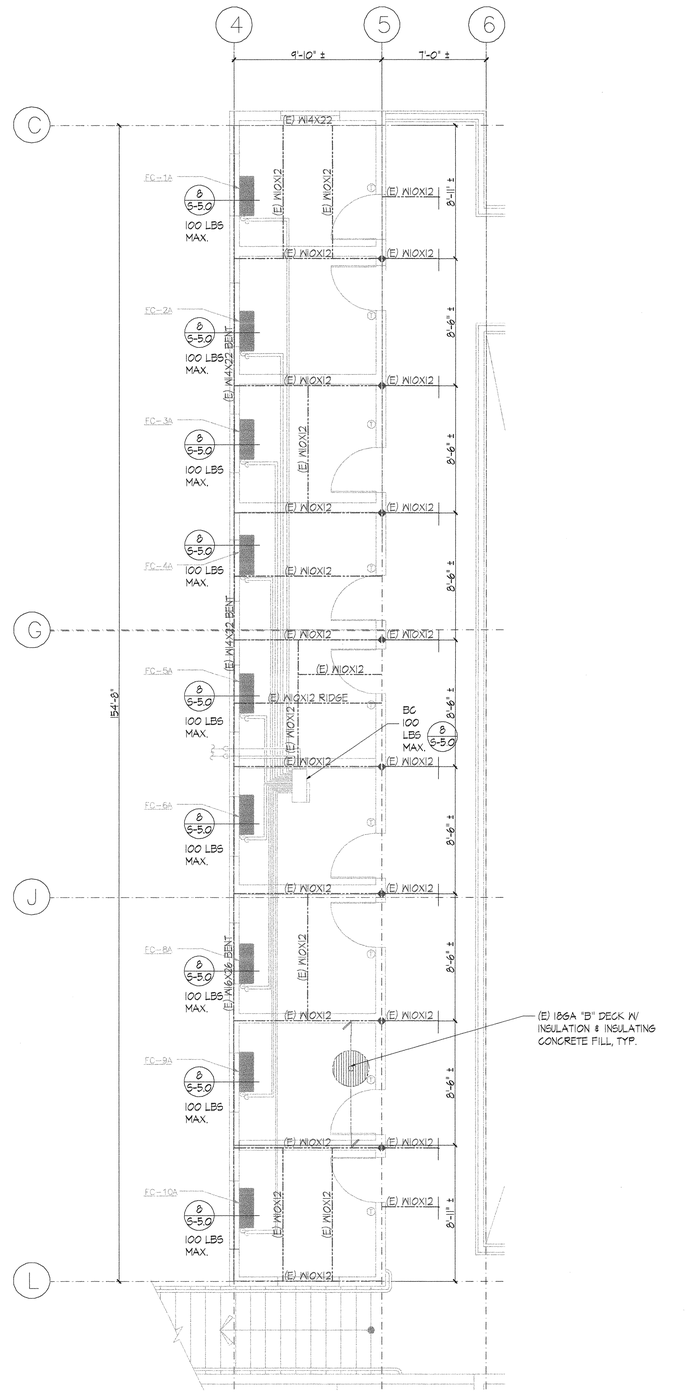

3 BUILDING "A" ROOMS 200 THRU 208 PARTIAL ROOF FRAMING PLAN

SCALE: 1/4"=1'-0"

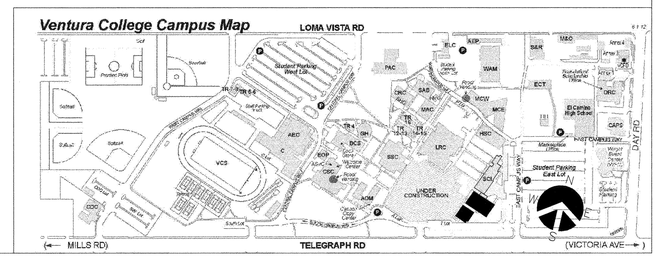
Ventura College Campus Map
LOMA VISTA RD
TELEGRAPH RD
(← MILLS RD)
(VICTORIA AVE →)
DAY RD
Student Parking Lot
Student Parking Lot
Student Parking Lot

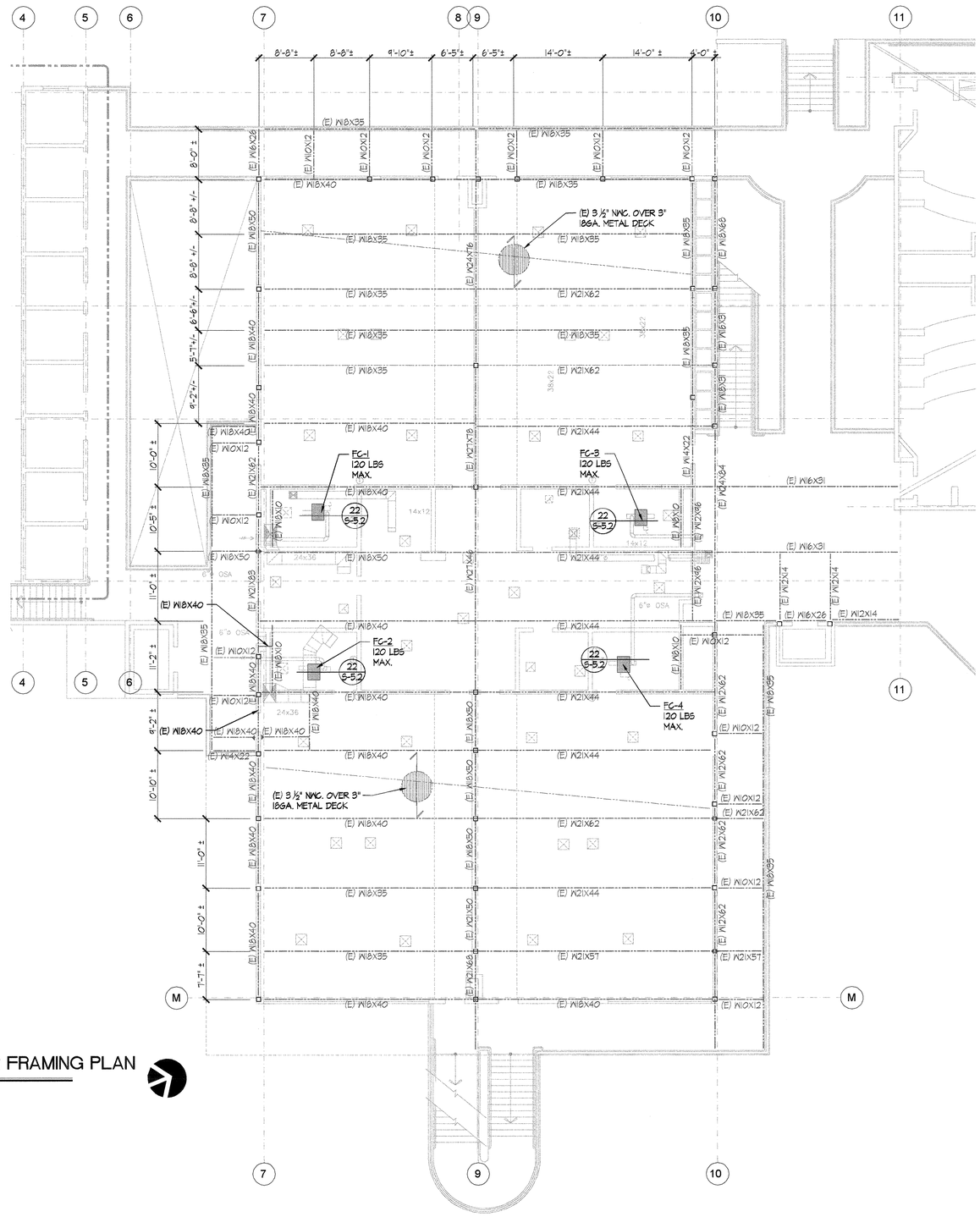

1 PARTIAL 3RD FLOOR FRAMING PLAN

SCALE: 1/8"=1'-0"

BUILDING "B"

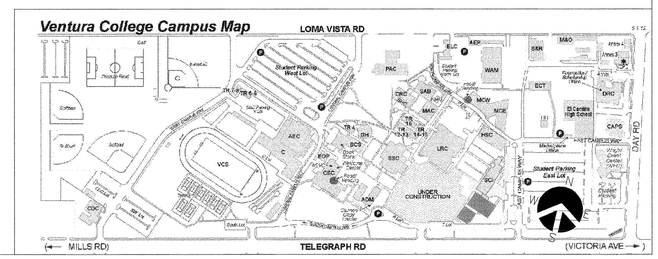

J & S CONSULTING ENGINEERS, INC.
ELECTRICAL • MECHANICAL
FIRE PROTECTION
3111 Winona Ave., #102
Burbank, Ca 91504
Tel.: (818) 841-0303
Fax: (818) 841-8531
624 Moorpark Road,
Moorpark, CA 93021
Tel.: (805) 523-1700
Fax: (805) 523-1702
www.jandsconsulting.com
E-Mail: jsmail@jandsconsulting.com

PROJECT No. 45461

LICENSED ARCHITECT JOAN ANN ANDOR C-22205 APRIL 30, 2017 REGISTRATION DATE STATE OF CALIFORNIA

REGISTERED PROFESSIONAL ENGINEER WILL A. LAMBERT NO. 5430 Exp. 06/30/2018 STRUCTURAL STATE OF CALIFORNIA

DATE OF SIGNING: 05/12/2017

Orion Structural

ORION STRUCTURAL GROUP, INC.
East Thousand Oaks Boulevard, Suite 304
Thousand Oaks, California 91360 - 7734
TEL: (805) 390-9242 FAX: (805) 494-0418

ORION PROJECT # 14712

VENTURA COLLEGE

4667 TELEGRAPH ROAD, VENTURA, CALIFORNIA, 93003

VENTURA COUNTY COMMUNITY COLLEGE DISTRICT

MATH & SCIENCE COMPLEX

IDENTIFICATION STAMP
DIV. OF THE STATE ARCHITECT
OFFICE OF REGULATION SERVICES
APPL. 03-117754
AC ___ FLS ___ SS ___
DATE JUL 05 2017

NO.	DATE	DESCRIPTION	BY
	12.19.16	DSA SUBMITTAL	

REVISIONS

DRAWN BY: MG
CHECKED BY: WL
DATE: 05/12/2017
JOB NO: 14712

SHEET TITLE

PARTIAL 3RD FLOOR FRAMING PLAN

SHEET

S-2.2

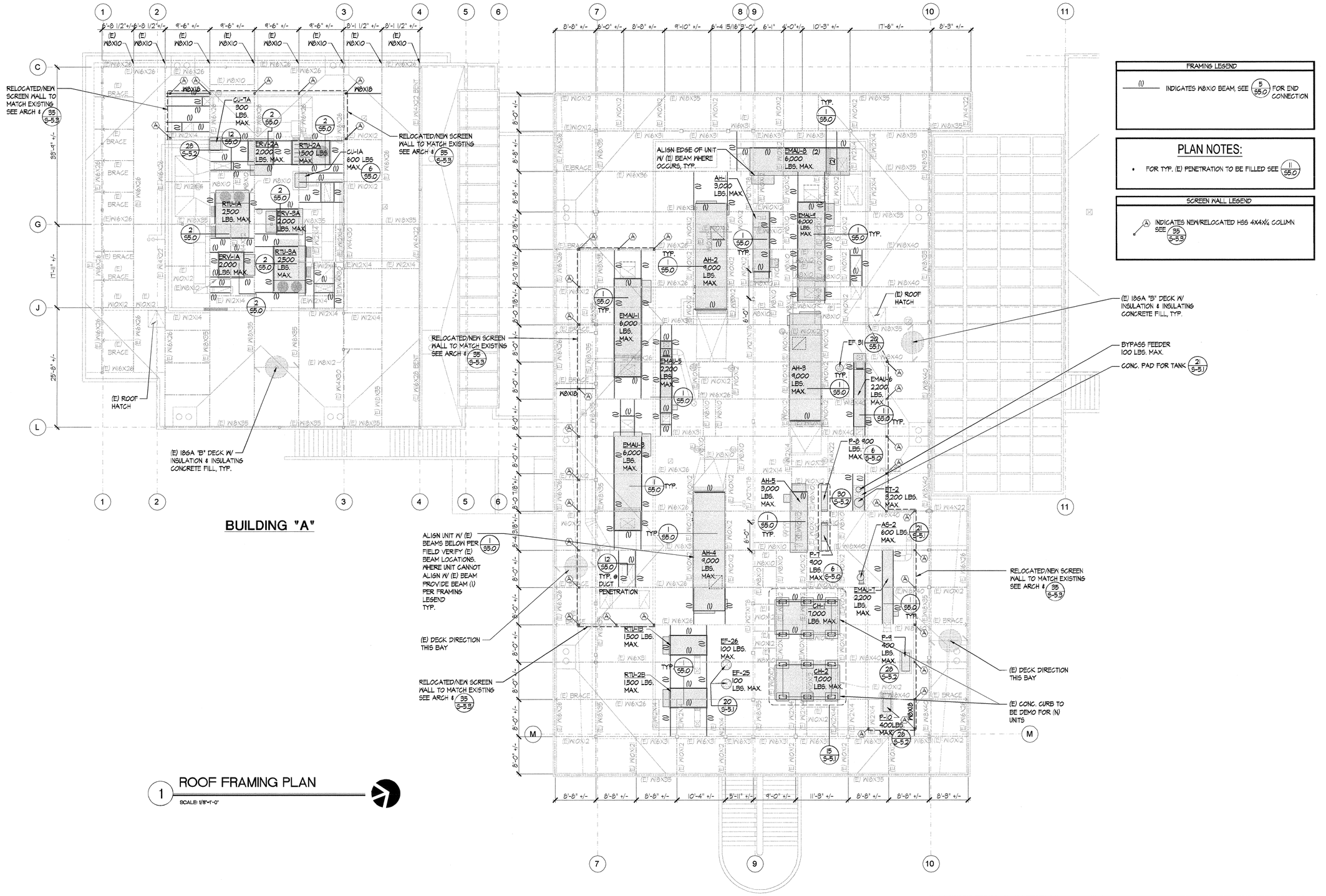

1 ROOF FRAMING PLAN

SCALE: 1/8"=1'-0"

FRAMING LEGEND

(1) INDICATES W8X10 BEAM, SEE 5/S5.0 FOR END CONNECTION

PLAN NOTES:

- FOR TYP. (E) PENETRATION TO BE FILLED SEE 11/S5.0

SCREEN WALL LEGEND

(A) INDICATES NEW/RELOCATED HSS 4X4X¼ COLUMN SEE 35/S-5.3

J & S CONSULTING ENGINEERS, INC.
ELECTRICAL • MECHANICAL
FIRE PROTECTION
3111 Winona Ave., #102
Burbank, Ca 91504
Tel.: (818) 841-0303
Fax: (818) 841-8531
624 Moorpark Road,
Moorpark, CA 93021
Tel.: (805) 523-1700
Fax: (805) 523-1702
www.jandsconsulting.com
E-Mail: jsmail@jandsconsulting.com
PROJECT No. 45461

LICENSED ARCHITECT JON ANN ALDOR C-22205 APRIL 30, 2017 RENEWAL DATE STATE OF CALIFORNIA

REGISTERED PROFESSIONAL ENGINEER WILL A. LAMBERT No. 5430 STRUCTURAL STATE OF CALIFORNIA
DATE OF SIGNING: 05/12/2017

Orion Structural
ORION STRUCTURAL GROUP, INC.
East Thousand Oaks Boulevard, Suite 304
Thousand Oaks, California 91360 - 7734
TEL: (805) 390-9242 FAX: (805) 494-0418
ORION PROJECT # 14712

VENTURA COLLEGE

4667 TELEGRAPH ROAD, VENTURA, CALIFORNIA, 93003
VENTURA COUNTY COMMUNITY COLLEGE DISTRICT

MATH & SCIENCE COMPLEX

IDENTIFICATION STAMP
DIV. OF THE STATE ARCHITECT
OFFICE OF REGULATION SERVICES
APPL. 03-117754
AC ___ FLS ___ SS ___
DATE JUL 05 2017

NO.	DATE	DESCRIPTION	BY
	12.19.16	DSA SUBMITTAL	

REVISIONS

DRAWN BY: MG
CHECKED BY: WL
DATE: 05/12/2017
JOB NO: 14712
SHEET TITLE

ROOF FRAMING PLAN

SHEET

S-4.2

33 of 82

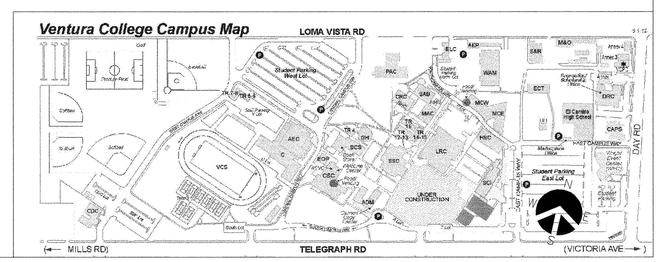

FRAMING LEGEND	
(1)	INDICATES W8X10 BEAM, SEE 5/S5.0 FOR END CONNECTION
(2)	INDICATES W10X12 BEAM, SEE 5/S5.0 FOR END CONNECTION

PLAN NOTES:

- FOR TYP. (E) PENETRATION TO BE FILLED SEE 11/S5.0

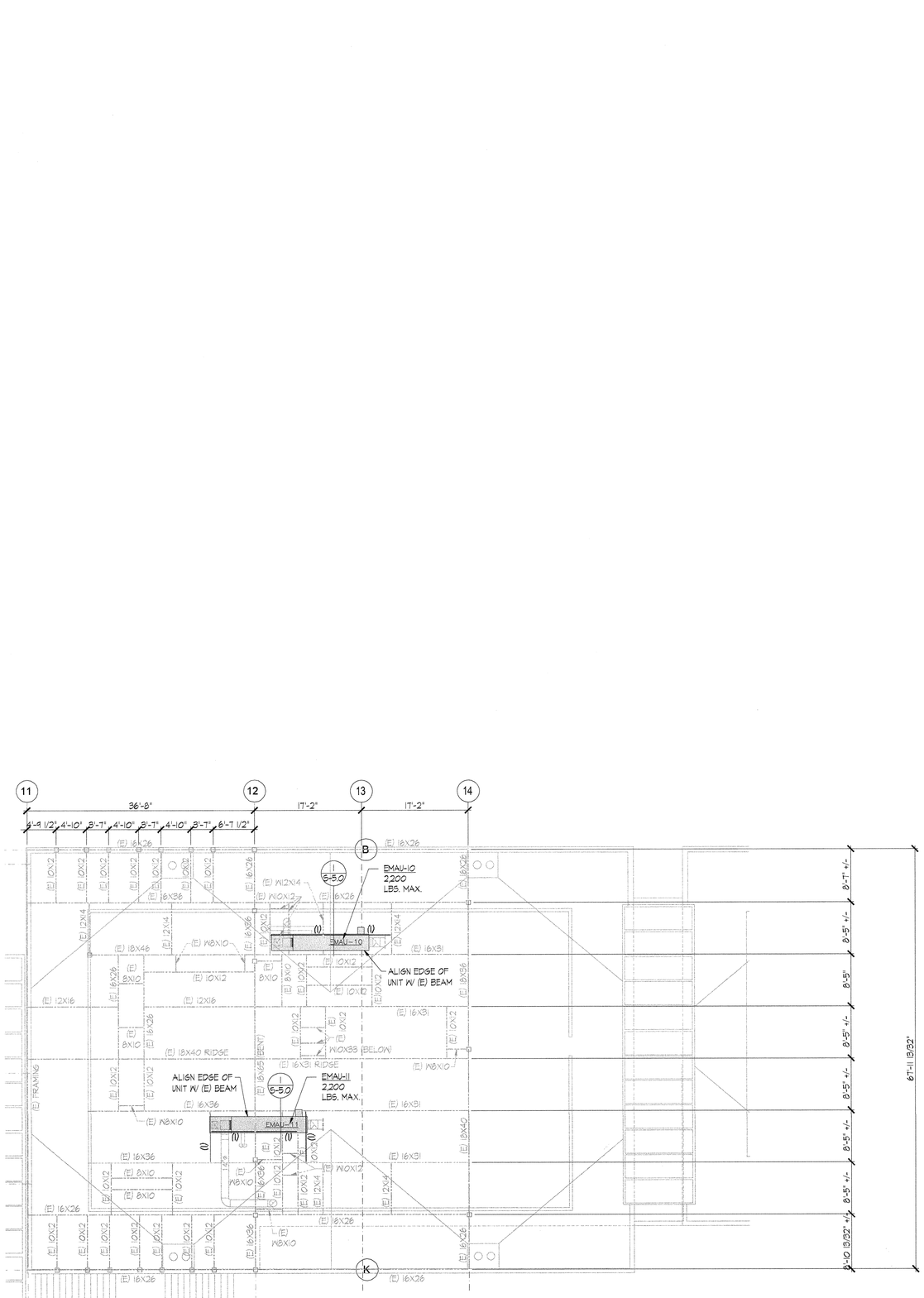

2 PARTIAL ROOF PLAN

SCALE: 1/8"=1'-0"

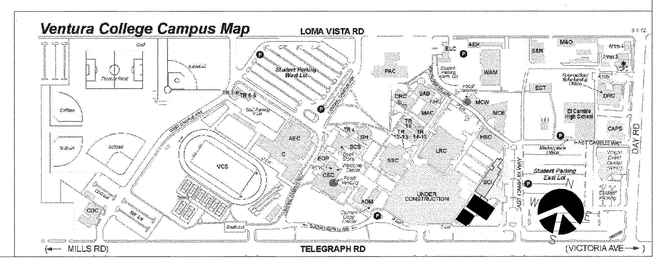

J & S CONSULTING ENGINEERS, INC.
ELECTRICAL • MECHANICAL
FIRE PROTECTION

3111 Winona Ave., #102
Burbank, Ca 91504
Tel.: (818) 841-0303
Fax: (818) 841-8531

624 Moorpark Road,
Moorpark, CA 93021
Tel.: (805) 523-1700
Fax: (805) 523-1702

www.jandsconsulting.com
E-Mail: jsmail@jandsconsulting.com

PROJECT No. 45461

LICENSED ARCHITECT — C-22205 — APRIL 30, 2017 RENEWAL DATE — STATE OF CALIFORNIA

REGISTERED PROFESSIONAL ENGINEER — WILL A. LAMB — No. 5430 — Exp. 06/30/2018 — STRUCTURAL — STATE OF CALIFORNIA

DATE OF SIGNING: 05/12/2017

Orion Structural

ORION STRUCTURAL GROUP, INC.
East Thousand Oaks Boulevard, Suite 304
Thousand Oaks, California 91360 - 7734
TEL: (805) 390-9242 FAX: (805) 494-0418

ORION PROJECT # 14712

VENTURA COLLEGE

4667 TELEGRAPH ROAD, VENTURA , CALIFORNIA, 93003
VENTURA COUNTY COMMUNITY COLLEGE DISTRICT

MATH & SCIENCE COMPLEX

IDENTIFICATION STAMP
DIV. OF THE STATE ARCHITECT
OFFICE OF REGULATION SERVICES
APPL. 03-117754
AC ___ FLS ___
DATE JUL 05 2017

NO.	DATE	DESCRIPTION	BY
	12.19.16	DSA SUBMITTAL	

REVISIONS

DRAWN BY:	MG
CHECKED BY:	WL
DATE:	05/12/2017
JOB NO:	14712

SHEET TITLE

ROOF FRAMING PLAN

SHEET

S-4.3

NOT USED

NOT TO SCALE | 7

TYP. SUSPENDED UTILITY ANCHORAGE @ BOILER ROOM

NTS | 4

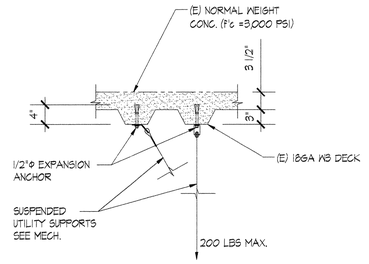

ROOF AH & MAU UNIT ANCHORAGE

NOT TO SCALE | 1

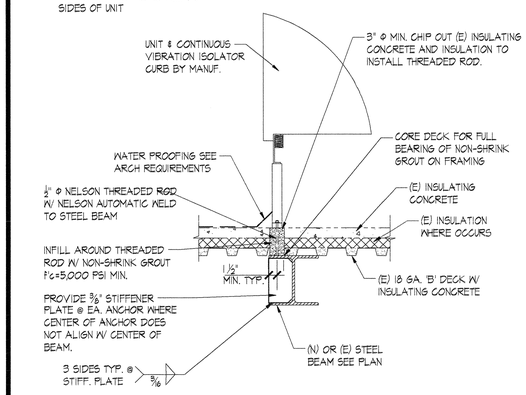

J & S CONSULTING ENGINEERS, INC.
ELECTRICAL ▫ MECHANICAL
FIRE PROTECTION
3111 Winona Ave., #102
Burbank, Ca 91504
Tel.: (818) 841-0303
Fax: (818) 841-8531
624 Moorpark Road,
Moorpark, CA 93021
Tel.: (805) 523-1700
Fax: (805) 523-1702
www.jandsconsulting.com
E-Mail: jsmail@jandsconsulting.com

PROJECT No. 45461

LICENSED ARCHITECT C-22205 APRIL 30, 2017 RENEWAL STATE OF CALIFORNIA

REGISTERED PROFESSIONAL ENGINEER WILL A. LANGLEY M.S. 5430 Exp. 06/30/2018 STRUCTURAL STATE OF CALIFORNIA

DATE OF SIGNING: 05/12/2017

Orion Structural

ORION STRUCTURAL GROUP, INC.
East Thousand Oaks Boulevard, Suite 304
Thousand Oaks, California 91360 - 7734
TEL: (805) 390-9242 FAX: (805) 494-1418

ORION PROJECT # 14712

VENTURA COLLEGE

4667 TELEGRAPH ROAD, VENTURA, CALIFORNIA, 93003
VENTURA COUNTY COMMUNITY COLLEGE DISTRICT

MATH & SCIENCE COMPLEX

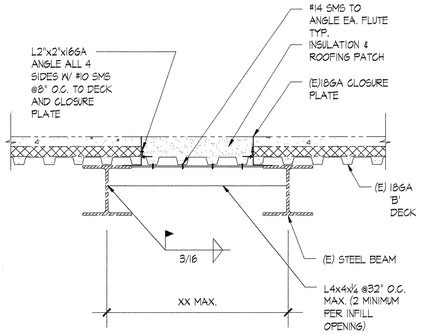

ROOF PENETRATION INFILL

NOT TO SCALE | 11

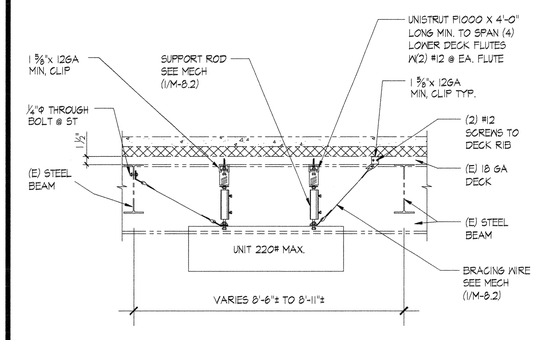

SUSPENDED UNIT TO ROOF DECK

NOT TO SCALE | 8

TYP. BEAM TO BEAM CONNECTION

NOT TO SCALE | 5

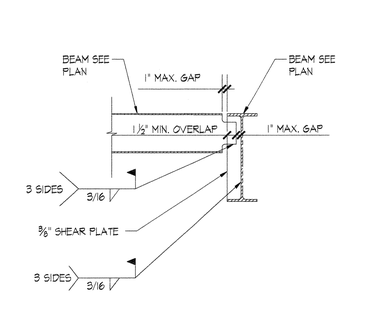

ROOF RTU & ERV UNIT ANCHORAGE

NOT TO SCALE | 2

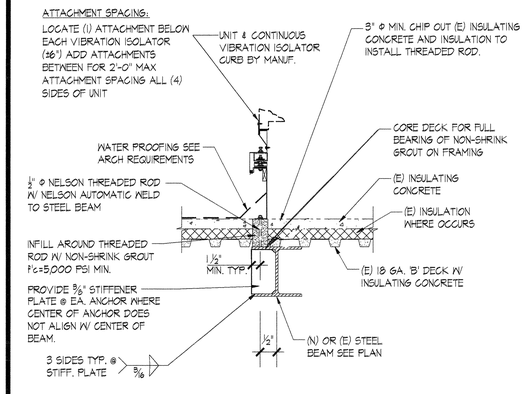

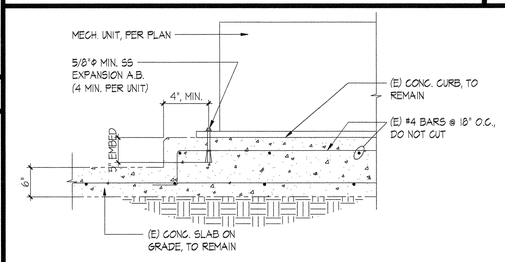

ANCHOR AT (E) CONC. CURB (A)

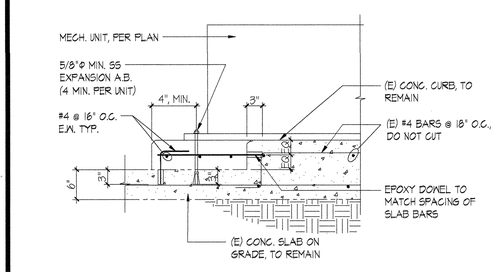

ANCHOR AT EXTENDED CONC. CURB (B)

SECTION @ ROOF PENETRATION

NOT TO SCALE | 12

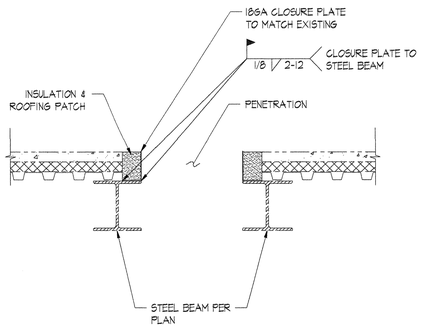

ROOF CURB FOR VIBRATION ISOLATOR FRAME (900 LBS MAX.) (P-7, P-8, CU-1)

NOT TO SCALE | 6

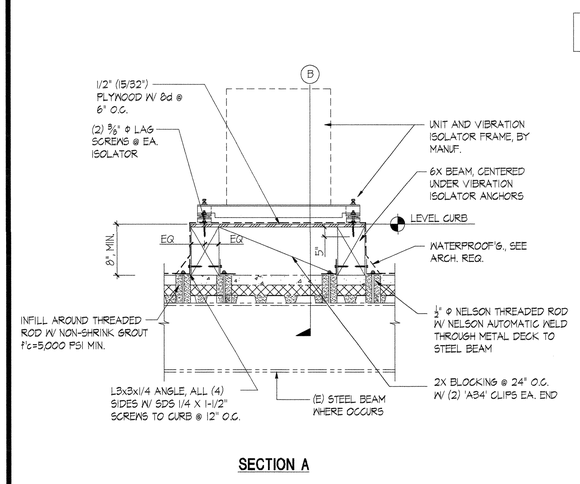

SECTION A

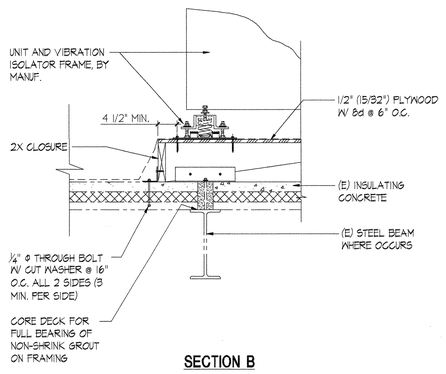

SECTION B

MECHANICAL ROOM PAD & ANCHORAGE

NOT TO SCALE | 3

IDENTIFICATION STAMP
DIV. OF THE STATE ARCHITECT
OFFICE OF REGULATION SERVICES
APPL. 03-117754
AC___ FLS___ SS___
DATE JUL 05 2017

NO.	DATE	DESCRIPTION	BY
	12.19.16	DSA SUBMITTAL	

REVISIONS

DRAWN BY: MG
CHECKED BY: WL
DATE: 05/12/2017
JOB NO: 14712

SHEET TITLE

STRUCTURAL DETAILS

SHEET

S-5.0

35 of 82

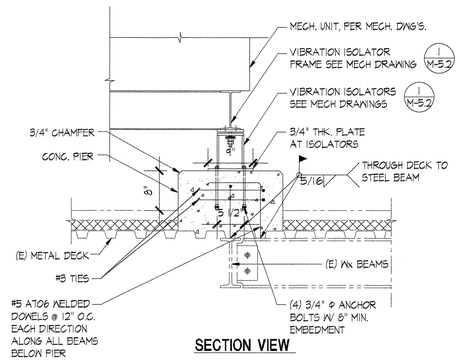

SECTION VIEW

ROOF CH UNIT ANCHORAGE SCALE: 1"=1'-0" 19

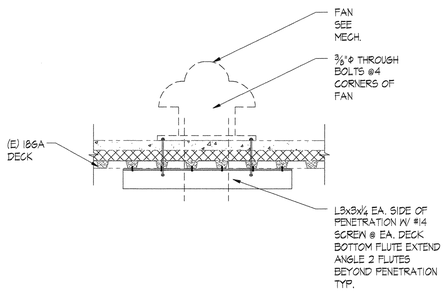

FAN ANCHORAGE (100 LBS MAX.) SCALE: 1"=1'-0" 20

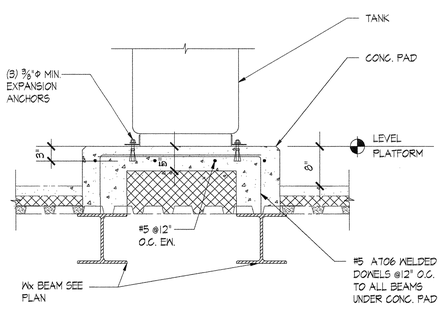

ROOF TANK ANCHORAGE SCALE: 1"=1'-0" 21

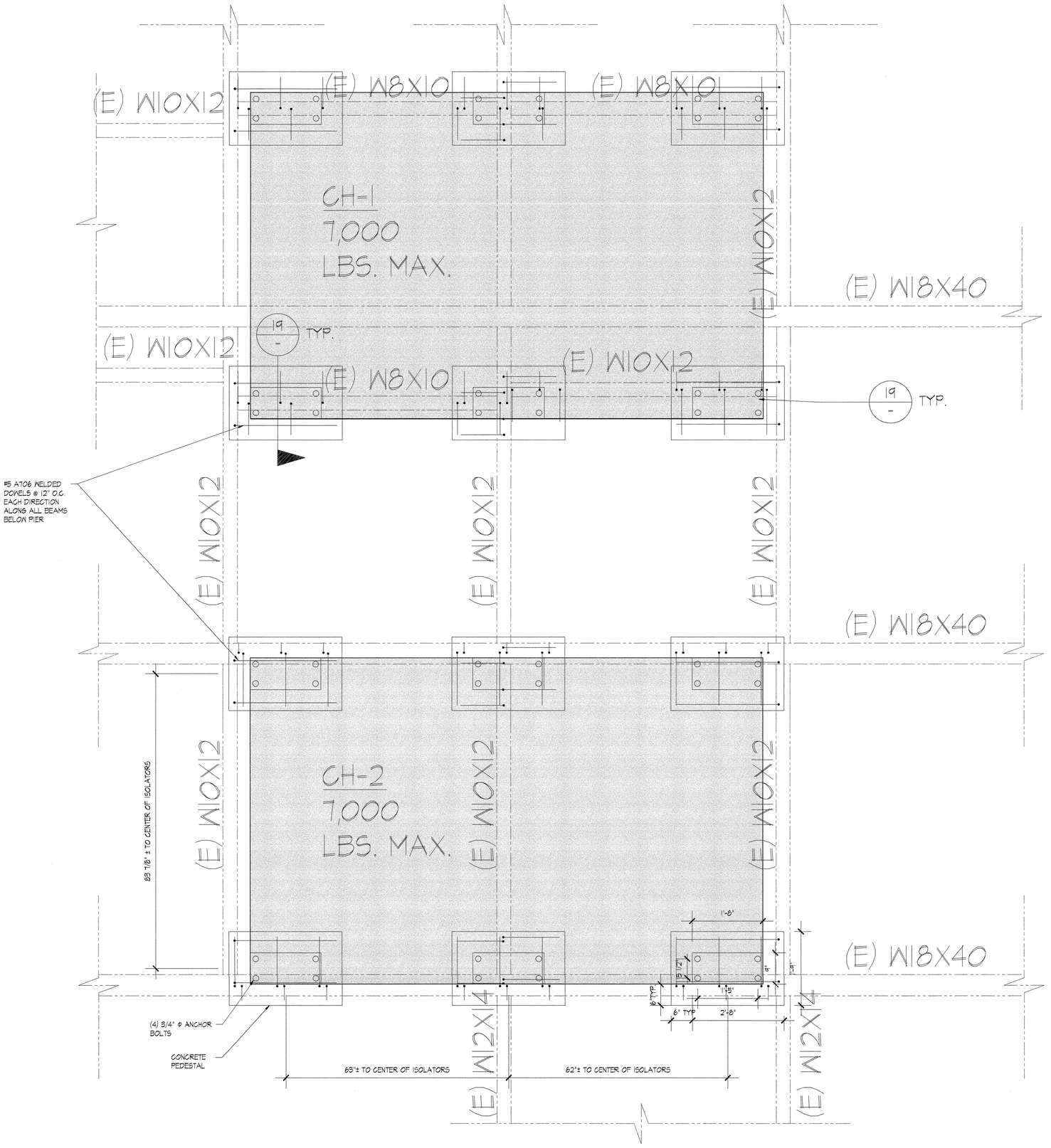

PLAN VIEW @ ROOF CH1 AND CH2 SCALE: 1"=1'-0" 15

J & S CONSULTING ENGINEERS, INC.
ELECTRICAL • MECHANICAL
FIRE PROTECTION
3111 Winona Ave., #102
Burbank, Ca 91504
Tel.: (818) 841-0303
Fax: (818) 841-8531
624 Moorpark Road,
Moorpark, CA 93021
Tel.: (805) 523-1700
Fax: (805) 523-1702
www.jandsconsulting.com
E-Mail: jsmail@jandsconsulting.com
PROJECT No. 45461

LICENSED ARCHITECT JOHN ANN ANDREW C-22205 APRIL 30, 2017 PRINCIPAL DATE STATE OF CALIFORNIA

REGISTERED PROFESSIONAL ENGINEER WILL A. LAMBERT NO. S430 Exp. 06/30/2018 STRUCTURAL STATE OF CALIFORNIA

DATE OF SIGNING: 05/12/2017

Orion Structural
ORION STRUCTURAL GROUP, INC.
East Thousand Oaks Boulevard, Suite 304
Thousand Oaks, California 91360 - 7734
TEL: (805) 390-9242 FAX: (805) 494-0418
ORION PROJECT # 14712

VENTURA COLLEGE

4667 TELEGRAPH ROAD, VENTURA, CALIFORNIA, 93003
VENTURA COUNTY COMMUNITY COLLEGE DISTRICT
MATH & SCIENCE COMPLEX

IDENTIFICATION STAMP
DIV. OF THE STATE ARCHITECT
OFFICE OF REGULATION SERVICES
APPL. 03-117754
AC ___ FLS ___ SS ___
DATE JUL 05 2017

NO.	DATE	DESCRIPTION	BY
	12.19.16	DSA SUBMITTAL	

REVISIONS

DRAWN BY: MG
CHECKED BY: WL
DATE: 05/12/2017
JOB NO: 14712
SHEET TITLE

STRUCTURAL DETAILS

SHEET
S-5.1

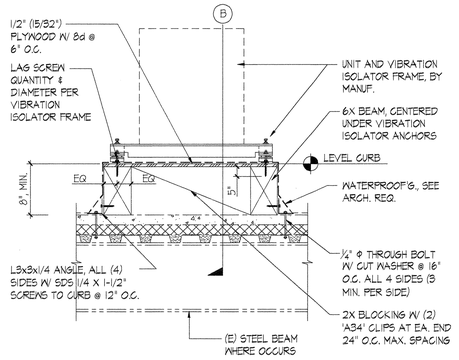

SECTION A

WOOD FRAMING CURB SHALL BE FIRE TREATED WITH PYRO-GUARD ICC ESR-1791

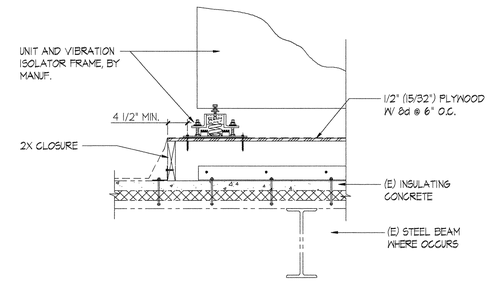

SECTION B

ROOF CURB FOR VIBRATION ISOLATOR FRAME (400 LBS MAX.) (7A, P-9, P-10) NOT TO SCALE 28

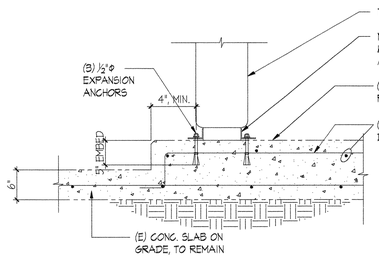

ANCHOR AT (E) CONC. CURB

CHEMICAL BYPASS ANCHORAGE @ MECHANICAL ROOM NTC 25

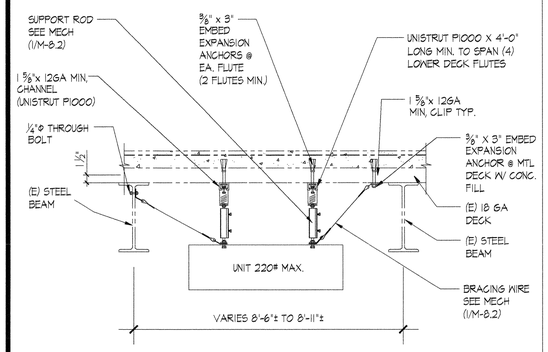

SUSPENDED UNIT TO FLOOR DECK NOT TO SCALE 22

J & S CONSULTING ENGINEERS, INC.
ELECTRICAL ▫ MECHANICAL
FIRE PROTECTION
3111 Winona Ave., #102
Burbank, Ca 91504
Tel.: (818) 841-0303
Fax: (818) 841-8531
624 Moorpark Road,
Moorpark, CA 93021
Tel.: (805) 523-1700
Fax: (805) 523-1702
www.jandsconsulting.com
E-Mail: jsmail@jandsconsulting.com

PROJECT No. 45461

LICENSED ARCHITECT — C-22205 — APRIL 30, 2017 RENEWAL DATE — STATE OF CALIFORNIA

REGISTERED PROFESSIONAL ENGINEER — WILL A. LANGE — NO. 5430 — Exp. 06/30/2018 — STRUCTURAL — STATE OF CALIFORNIA

DATE OF SIGNING: 05/12/2017

Orion Structural

ORION STRUCTURAL GROUP, INC.
East Thousand Oaks Boulevard, Suite 304
Thousand Oaks, California 91360 - 7734
TEL: (805) 390-9242 FAX: (805) 494-0418

ORION PROJECT # 14712

VENTURA COLLEGE

4667 TELEGRAPH ROAD, VENTURA, CALIFORNIA, 93003
VENTURA COUNTY COMMUNITY COLLEGE DISTRICT
MATH & SCIENCE COMPLEX

IDENTIFICATION STAMP
DIV. OF THE STATE ARCHITECT
OFFICE OF REGULATION SERVICES
APPL. 03-117754
AC ___ FLS ___ SS ___
DATE JUL 05 2017

NO.	DATE	DESCRIPTION	BY
	12.19.16	DSA SUBMITTAL	
REVISIONS			

DRAWN BY: MG
CHECKED BY: WL
DATE: 05/12/2017
JOB NO: 14712
SHEET TITLE

STRUCTURAL DETAILS

SHEET

S-5.2

37 of 82

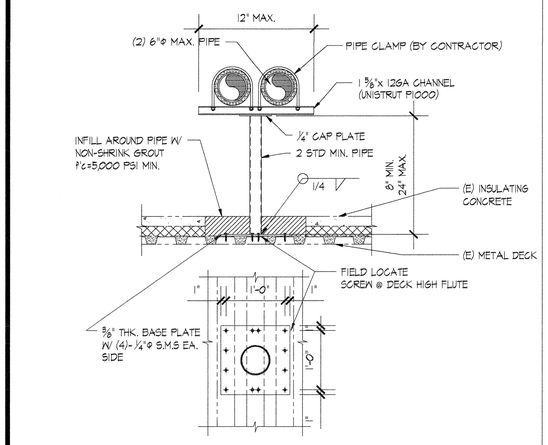

PIPE SUPPORT NOT TO SCALE 23

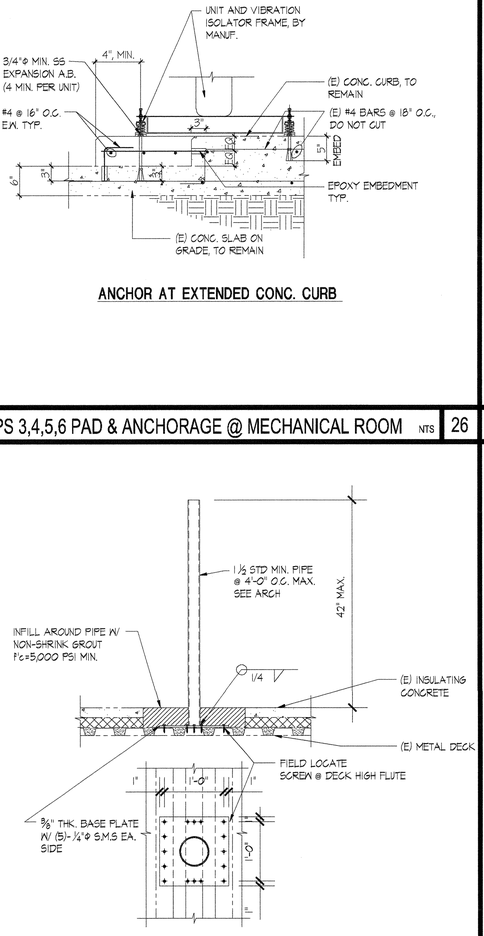

ANCHOR AT EXTENDED CONC. CURB

PUMPS 3,4,5,6 PAD & ANCHORAGE @ MECHANICAL ROOM NTS 26

ANCHOR AT (E) CONC. CURB

ET-1 @ MECHANICAL ROOM PAD & ANCHORAGE NOT TO SCALE 24

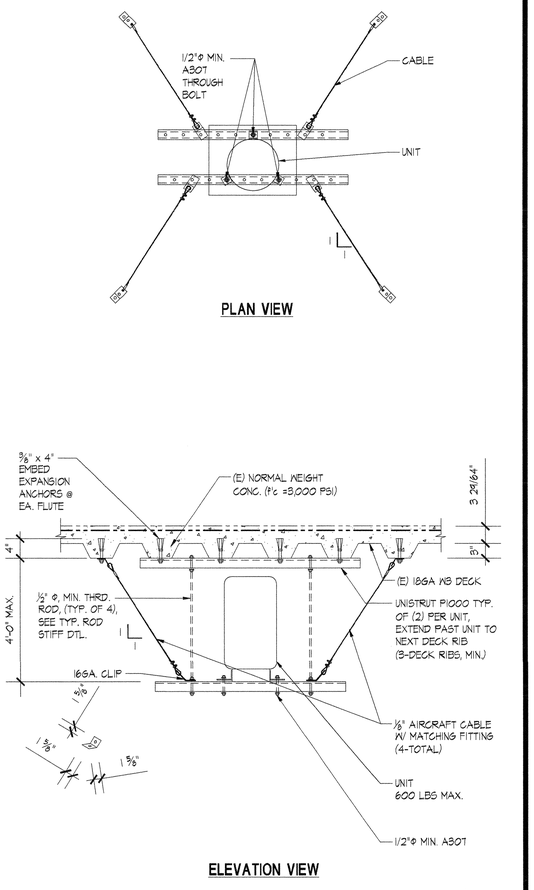

PLAN VIEW

ELEVATION VIEW

AS-1, SUSPENDED UNIT TO FLOOR DECK NOT TO SCALE 33

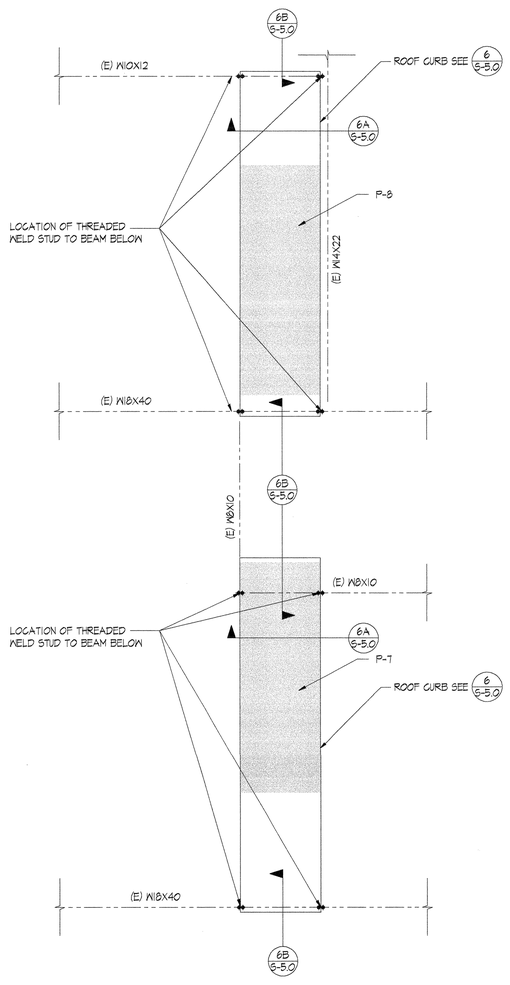

P-7 & P-8 ANCHORAGE POINT LOCATIONS NOT TO SCALE 30

ROOF HANDRAIL BASE PLATE NOT TO SCALE 27

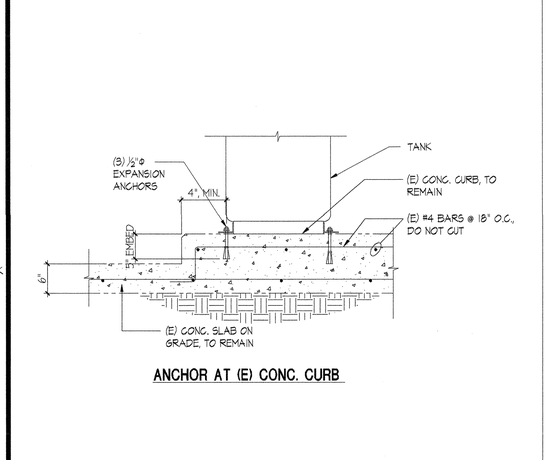

ANCHOR AT (E) CONC. CURB

NOT TO SCALE -

NOT TO SCALE -

NOT TO SCALE -

NOT TO SCALE -

NOT TO SCALE -

NOT TO SCALE -

NOT TO SCALE -

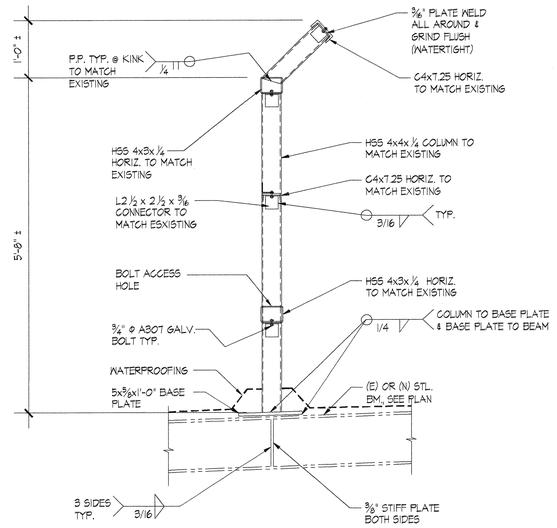

RELOCATED/NEW ROOF SCREEN POST ATTACHMENT DETAIL

NOT TO SCALE 35

J & S CONSULTING ENGINEERS, INC.
ELECTRICAL • MECHANICAL
FIRE PROTECTION
3111 Winona Ave., #102
Burbank, Ca 91504
Tel.: (818) 841-0303
Fax: (818) 841-8531
624 Moorpark Road,
Moorpark, CA 93021
Tel.: (805) 523-1700
Fax: (805) 523-1702
www.jandsconsulting.com
E-Mail: jsmail@jandsconsulting.com
PROJECT No. 45461

LICENSED ARCHITECT JON ANN ANDOR C-22205 APRIL 30, 2017 REGISTERED PROFESSIONAL ENGINEER STATE OF CALIFORNIA

REGISTERED PROFESSIONAL ENGINEER WILL A. LAMBERT No. 5430 Exp. 06/30/2018 STRUCTURAL STATE OF CALIFORNIA

DATE OF SIGNING: 05/12/2017

Orion Structural
ORION STRUCTURAL GROUP, INC.
East Thousand Oaks Boulevard, Suite 304
Thousand Oaks, California 91360 - 7734
TEL: (805) 390-9242 FAX: (805) 494-0418
ORION PROJECT # 14712

VENTURA COLLEGE

4667 TELEGRAPH ROAD, VENTURA, CALIFORNIA, 93003

VENTURA COUNTY COMMUNITY COLLEGE DISTRICT

MATH & SCIENCE COMPLEX

IDENTIFICATION STAMP
DIV. OF THE STATE ARCHITECT
OFFICE OF REGULATION SERVICES
APPL. 03-117754
AC ___ FLS ___ SS ___
DATE JUL 05 2017

NO.	DATE	DESCRIPTION	BY
	12.19.16	DSA SUBMITTAL	

REVISIONS

DRAWN BY: MG
CHECKED BY: WL
DATE: 05/12/2017
JOB NO: 14712

SHEET TITLE

STRUCTURAL DETAILS

SHEET

S-5.3

GENERAL NOTES

1. THE INTENT OF THESE DOCUMENTS IS TO PROVIDE COMPLETE AND IN PROPER OPERATION THE COOLING, HEATING, AND VENTILATING SYSTEM, ALL AS SPECIFIED OR INDICATED ON THESE DRAWINGS, OR REASONABLY IMPLIED.
2. ALL MECHANICAL WORK SHALL COMPLY WITH THE APPLICABLE CHAPTERS OF THE UMC; ALL APPLICABLE LOCAL, STATE AND FEDERAL CODES, AND OTHER AUTHORITIES HAVING JURISDICTION.
3. THE CONTRACTOR SHALL VERIFY AND COORDINATE WITH GENERAL CONTRACTOR THE LOCATION OF PENETRATIONS BEFORE CUTTING THRU ROOF OR WALLS.
4. THE PROJECT MANAGER AND CONTRACTOR SHALL EXAMINE THE SITE AND DISCUSS GENERAL REQUIREMENTS OF BUILDING AND PERFORMING HIS WORK WITH THE OWNER. CONTRACTOR SHALL COORDINATE HIS WORK WITH ALL OTHER TRADES ON THE PROJECT.
5. THE CONTRACTOR IS TO REPORT TO THE PROJECT MANAGER ANY OBSERVATIONS OR CONDITIONS WHICH ARE DISCOVERED IN THE BUILDING WHICH WOULD PREVENT THE FULLEST USE OF THE HVAC SYSTEM.
6. CONDENSATE DRAINS SHALL COMPLY WITH THE CALIFORNIA MECHANICAL CODE, SECTION 310.
7. VERIFY ELECTRIC POWER CHARACTERISTICS AT JOB SITE PRIOR TO ORDERING ANY MECHANICAL EQUIPMENT.
8. ALL EQUIPMENT ANCHORAGE SHALL BE DETAILED ON DRAWINGS. DESIGN SHALL CONFORM TO 2007 CBC SECTION AND ASCE 07-5.
9. THE SEISMIC BRACING AND ANCHORAGE OF DUCTS AND PIPING SHALL BE IN ACCORDANCE WITH THE "GUIDELINE FOR SEISMIC RESTRAINS OF MECHANICAL SYSTEMS AND PLUMBING PIPING SYSTEMS" PUBLISHED BY SMACNA LATEST VERSION AND APPROVED BY DSA. A COPY OF THE APPROVED GUIDELINE SHALL BE PROVIDED BY THE CONTRACTOR AND BE KEPT AT THE JOB SITE AT ALL TIMES. WHERE BRACING AND ANCHORAGE DETAILS ARE NOT SHOWN ON THE DRAWINGS OR IN THE GUIDELINES, THE FIELD INSTALLATION SHALL BE SUBJECT TO THE APPROVAL OF THE ARCHITECT, MECHANICAL ENGINEER, AND DSA FIELD ENGINEER.
10. CUTTING, BORING, SAWCUTTING OR DRILLING THROUGH THE EXISTING STRUCTURAL ELEMENTS TO BE DONE ONLY WHEN SO DETAILED IN THE DRAWINGS OR ACCEPTED BY THE ARCHITECT WITH THE APPROVAL OF DSA FIELD REPRESENTATIVE.
11. REFER TO PROJECT SPECIFICATIONS FOR ADDITIONAL REQUIREMENTS.
12. ALL BRACING OF DUCTS AND PIPINGS SHALL BE INSTALLED IN ACCORDANCE WITH SMACNA GUIDELINES AS APPROVED BY DSA.
13. WHERE BRACING DETAILS ARE NOT SHOWN ON THE DRAWINGS OR IN THE GUIDELINES, THE FIELD INSTALLATION SHALL BE SUBJECTED TO THE APPROVAL OF THE ARCHITECT, STRUCTURAL ENGINEER AND DSA FIELD ENGINEER.
14. A COPY OF THE GUIDELINES PUBLISHED BY SMACNA AND APPROVED BY DSA SHALL BE PROVIDED BY THE CONTRACTOR AND KEPT ON THE JOB AT ALL TIMES.

MEP Component Anchorage Note

All mechanical, plumbing, and electrical components shall be anchored and installed per the details on the DSA approved construction documents. Where no detail is indicated, the following components shall be anchored or braced to meet the force and displacement requirements prescribed in the 2013 CBC, Sections 1616A.1.18 through 1616A.1.26 and ASCE 7-05 Chapter 6 and 13.

1. All permanent equipment and components.
2. Temporary or movable equipment that is permanently attached (e.g. hard wired) to the building utility service such as electricity, gas or water.
3. Movable equipment, which is stationed in one place for more than 8 hours and heavier than 400 pounds, are required to be anchored with temporary attachments.

The attachment of the following mechanical and electrical components shall be positively attached to the structure but need not be detailed on the planes. These components shall have flexible connections provided between the component and associated ductwork, piping, and conduit.

A. Components weighting less than 400 pounds and have a center of mass located 4 feet or less above the adjacent floor or roof level that directly support the component.
B. Components weighting less than 20 pounds, or in the case of distributed system, less than 5 pounds per foot, which are suspended from a roof or floor or hung from a wall.

For those elements that do not require details on the approved drawings, the installation shall be subject to the approval of the Structural Engineer of Record and the DSA District Structural Engineer. The project inspector will verify that all components and equipment have been anchored in accordance with above requirements.

Piping, Ductwork, and Electrical Distribution System Bracing Note

Piping, ductwork, and electrical distribution systems shall be braced to comply with the forces and displacement prescribed in ASCE 7-10 Section 13.3 as defined in ASCE 7-10 Section 13.6.8, 13.6.7, 13.6.5.6, and 2013 CBC, Sections 1616A.1.18, 1616A.1.24 and 1615A.1.26.

The bracing and attachments to the structure shall be detailed on the approved drawings or they shall complly with one of the OSHPD Pre-Approvals (OPA #) as modified to satisfy anchorage requirements of ACI 318, Appendix D.

Copies of the manual shall be available on the jobsite prior to the start of hanging and bracing of the pipe, ductwork, and electrical distribution systems.

The Structural Engineer of Record shall verify the adequacy of the structure to support the hanger and brace loads.

HYDRONIC PIPING SYMBOLS & ABBREVIATIONS

SYMBOLS	ABBR	DESCRIPTION	ABBR	DESCRIPTION
	HHWS	HEATING WATER SUPPLY	ABV	ABOVE
	HHWR	HEATING WATER RETURN	APPD	APPORVED
	CHWS	CHILLED WATER SUPPLY	BEL	BELOW
	CHWR	CHILLED WATER RETURN	BTE	BETWEEN
	CWS	CONDENSER WATER SUPPLY	BEY	BEYOND
	CWR	CONDENSER WATER RETURN	BFP	BACK FLOW PREVENTER
	C/HHWS	CHILLED/HEATING HOT WATER SUPPLY	BLR	BOILER
	C/HHWR	CHILLED/HEATING HOT WATER RETURN	B.R.	BOTTOM RETURN
RG	RG	REFRIGERANT HOT GAS PIPING	BSBD	BASEBORD
HV	HV	HYDRONIC VENT	CHOP	CHAIN OPERATED
CD	CD	CONDENSATE DRAIN	CHR	CHILLER
D	DR	DRAIN	COMP	COMPRESSOR
	CW	DOMESTIC WATER	CONN	CONNECT OR CONNECTION
PM	PM	PNEUMATIC CONTROL MAIN AIR	C.P.S	COPPER PIPE SIZE-ID
	P.D.	PIPE DROP	C.R.	CEILING REGISTER
	P.R.	PIPE RISER	DTL	DETAIL
	SLV	SLEEVE(WALL OR FLOOR)	DO	DITTO
	CONC.R	CONCENTRIC REDUCER	EFF	EFFICIENCY
	ECC.R	ECCENTRIC REDUCER	ELL	ELBOW
	UN	UNION	EXP	EXPOSED
	P.H	PIPE HANGER	F.D	FLOOR DRAIN
	P.A	PIPE ANCHOR	FPS	FEET PER SECOND
	STR	LINE STRAINER W/DRAIN	F.S	FLOOR SINK
	GV(SOV)	GATE(SHUT OFF)VALVE	FT.HD	HEAD PRESSURE(FT.H2O)
	GL-V	GLOBE VALVE	G.PM	GALLON PER MINUTE
	BAL.V	BALANCING VALVE	I.P.S	IRON PIPE SIZE
	FCV	FLO-CONTROL VALVE	JSTS	JOISTS
	BLR.DR	BOILER DRAIN VALVE	LR	LONG RADIUS
	SOL.VLV	SOLENOID CONTROL VALVE	MTD	MOUNTED
	MOD.VLV	MODULATING CONTROL VLV	OPER	OPERATOR OPERATED
	BFV	BUTTERFLY VALVE	PSI	PRESSURE-POUND/INCH
	GC	GAGE COCK	RAD	RADIATION RADIENT
	TPRV	TEMP./PRESS.RELIEF VALVE	SCH	SCHEDULE
	BPV	PRESS.BY-PASS VALVE	S.G.	SPECIFIC GRAVITY
	CH.K	CHECK VALVE	SWP	STEAM WORKING PRESS.
	V.J.	VICTAULIC COUPLING JOINT	TWR	COOLING TOWER
	A.A.V	AUTOMATIC AIR VENT	UNGD	UNDERGROUND
	M.A.V	MANUAL AIR VENT	VLV	VALVE
	M.O.	METERING ORIFICE		
	E.J.	EXPANSION JOINT		
	P.G.	PRESS.GAGE(W/PSI RANGE)		
	T.H.	THERMOMETER(W/F-RANGE)		
F	FS	FLOW SWITCH		

HVAC LEGEND

SYMBOL (ONE-LINE / DOUBLE-LINE)	DESCRIPTION
12x6 or 12/6	DUCTWORK-1 st DIMENSION IS SIDE SHOWN, 2nd DIMENSION SIDE NOT SHOWN
	FLEXIBLE INSULATED DUCTWORK
	DUCT SIZE TRANSITION
18"ø 16x12	DUCT SHAPE TRANSITION
	ROUND DUCT VERTICAL RISE/DROP
	RECTANGULAR DUCT VERTICAL RISE/DROP
R(D)	GRADUAL RISE/DROP IN DUCTS
	VERTICAL TAKE-OFF UP
	VERTICAL TAKE-OFF DOWN
	RECTANGULAR DUCT 90 DEGREE MITERED ELBOW WITH TURNING VANES
	RECTANGULAR DUCT ANGLE TAKE-OFF
12"ø 10"ø	ROUND DUCT ANGLE TAKE-OFF
FD SD	FIRE DAMPER /SMOKE DAMPER, COMBI-NATION SMOKE & FIRE DAMPER-PROVIDE ACCESS DOOR & CEILING ACCESS
	MANUAL VOLUME DAMPER (MVD) W/LOCKING QUADRANT OPERATOR
	EXHAUST DUCT SECTION
	RETURN DUCT SECTION
	SUPPLY DUCT SECTION
	EXHAUST GRILLE
	RETURN GRILLE
	SUPPLY DIFFUSER
20x12(L) LINE (L)	PLENUM OR DUCT LINER. NET AIRSIDE DIMENSION SHOWN
EXH	EXHAUST
OSA	OUTSIDE AIR FLOW
RA	RETURN AIR
SA	SUPPLY AIR
UC	UNDERCUT DOOR
D.LVR	DOOR LOUVER W/GROSS AREA
TR	TRANSFER AIR FLOW
T S	THERMOSTAT / SENSOR
A	SMOKE DETECTOR TEST/ANNUNCIATOR STATION-MOUNT NEXT TO UNITS THERMOSTAT
BT	TIME SWITCH (BYPASS TIMER)
SD	DUCT SMOKE DETECTOR
A 12x12 / 300 CFM	CEILING DIFFUSER/REGISTER IDENTIFICATION: "A"-GRILLE TYPE PER AIR DISTRIBUTION SCHEDULE, 12"X12" NECK, 300 CFM AIR FLOW
HP 1	EQUIPMENT IDENTIFICATION
	LOW VOLTAGE WIRING IN MECHANICAL WORK
	LINE VOLTAGE WIRING IN ELECTRICAL WORK
P.O.C.	POINT OF CONNECTION
P.O.D.	POINT OF DISCONNECTION STOP DEMOLITION AT THIS POINT

J & S CONSULTING ENGINEERS, INC.
ELECTRICAL • MECHANICAL
FIRE PROTECTION
3111 Winona Ave., #102
Burbank, Ca 91504
Tel.: (818) 841-0303
Fax: (818) 841-8531
470 Helga Ct. Unit A
Newbury Park, Ca. 91320
Tel. (818) 398-5793
Fax: (818) 841-8531
www.jandsconsulting.com
E-Mail: jsmail@jandsconsulting.com

PROJECT No. 45461

LICENSED ARCHITECT JEAN ANN AMADOR C-22205 APRIL 30, 2019 RENEWAL DATE STATE OF CALIFORNIA

REGISTERED PROFESSIONAL ENGINEER ARNEL B. DE SILVA No. M22816 EXPIRES 09-30-18 MECHANICAL STATE OF CALIFORNIA

VENTURA COLLEGE
4667 TELEGRAPH ROAD, VENTURA, CALIFORNIA, 93003
VENTURA COUNTY COMMUNITY COLLEGE DISTRICT
MATH & SCIENCE COMPLEX

IDENTIFICATION STAMP
DIV. OF THE STATE ARCHITECT
OFFICE OF REGULATION SERVICES
APPL. 03- 117754
AC — FLS SS
DATE JUL 05 2017

NO.	DATE	DESCRIPTION	BY
	12.19.16	DSA SUBMITTAL	

REVISIONS

DRAWN BY: S.L.
CHECKED BY: A.D.S.
DATE 05.12.17
JOB NO: 33.08323
SHEET TITLE

HVAC LEGEND AND GENERAL NOTES

SHEET
M-0.1
DWG # 39 OF 82

Job No. 45461; FILE: N:\45461-VenturaColl\M0-1.dwg; Layout1 Ref. Files: sheet.dwg
Plot Date: 05-11-17, 10:42am; Plot scale: 1=1-PS By: S.L. Prev. plot: 05-11-17, 10:15am

05-12-17 DSA SUBMITTAL

HEAT PUMP SCHEDULE

CONDENSING UNIT		
UNIT DESIGNATION	CU-1A	CU-7A
NOMINAL CAPACITY-TONS	6	1.5
MAKE	MITSUBISHI	TRANE
MODEL	PURY-P72TLMU-A	4TWR4018D1000
REFRIGERANT TYPE	R410A	R410A
GROSS COOLING CAPACITY, BTUH (ARI COND.)	72,000	18,100
SENSIBLE COOLING CAPACITY, BTUH. (ARI COND.)		13200
SEER/EER	23.1/13.5	14.5/12
GROSS HEATING CAPACITY, MBH @45 DEG. F. OAT	80,000	17,000
COP	3.65	3.7
REFRIGERANT CHARGE, LBS.	13 lbs 3 oz	5.3
ELECTRICAL SERVICE: VOLTS/PHASE	208/230/3	208/1
COMPRESSOR RATED LOAD AMPS		6.4
CONDENSER FAN FLA		0.77
MINIMUM CIRCUIT AMPACITY	24/22	9
MAXIMUM OVERCURRENT PROTECTION	35	15
OPERATING WEIGHT, LBS.	458	204
ACCESSORIES		

NOTES:
1. CRANKCASE HEATER
2. COMPRESSOR START ASSIST CAPACITOR AND RELAY
3. HARD-SHUTOFF TxV

FAN COIL UNIT		
UNIT DESIGNATION	FC-1A,2A,3A,4A,5A,6A,8A,9A,10A	FC-7A
MANUFACTURER	MITSUBISHI	TRANE
MODEL	PKFY-P06NBMU-E2	GAM580A18M115A
NOMINAL TONS	0.5	1.5
AIR FLOW CONFIGURATION	SIDEWALL	HORIZONTAL
AIR FLOW, CFM	210	600
OUTSIDE AIR FLOW, CFM	SEE PLANS	SEE PLANS
COOLING CAPACITY, BTUH	6000	18100
HEATING CAPACITY, BTUH	6700	17000
DRIVE	DIRECT DRIVE	
FAN RPM		1050
ELECTRICAL SERVICE: VOLTS/PHASE	208/1	208/1
MOTOR HP	0.01	0.33
UNIT WEIGHT, LBS.	22	126

NOTES:
1. PROVIDE MERV-13 AIR FILTER.
2. HARD-SHUTOFF TxV

EXHAUST AIR / MAKE-UP AIR UNIT SCHEDULE

UNIT DESIGNATION		EMAU-1	EMAU-3	EMAU-5	EMAU-6	EMAU-7	EMAU-8	EMAU-9	EMAU-10	EMAU-11
SERVICE		SEE PLANS	SEE PLANS	SEE PLANS	SEE PLANS	SEE PLANS	SEE PLANS	SEE PLANS	SEE PLANS	SEE PLANS
MAKE		TRANE	TRANE	TRANE	TRANE	TRANE	TRANE	TRANE	TRANE	TRANE
MODEL		CSAA017UB	CSAA017UB	CSAA003UB	CSAA003UB	CSAA003UB	CSAA017UB	CSAA017UB	CSAA003UB	CSAA003UB
OPERATING WEIGHT, LB		5895	5895	2159	2184	2159	5970	5970	2161	2161
SUPPLY FAN	CFM	7120	7120	790	1270	790	7120	7120	790	790
	ESP, IN. WTR.	1.4	1.4	0.7	0.7	0.7	1.570	1.570	0.7	0.7
	HP	7.5	7.5	1	1	1	7.5	7.5	1	1
	VOLTAGE/PHASE	460/3	460/3	460/3	460/3	460/3	460/3	460/3	460/3	460/3
EXHAUST FAN	CFM	7620	7620	790	1270	790	7620	7620	790	790
	ESP, IN. WTR.	2	2	1.5	1.5	1.5	2	2	1.5	1.5
	HP	7.5	7.5	1	1	1	7.5	7.5	1	1
	VOLTAGE/PHASE	460/3	460/4	460/3	460/3	460/3	460/3	460/3	460/3	460/3
COOLING	TOT CAP, MBH	108.12	108.12	19.59	49.52	19.59	182.53	182.53	22.39	22.39
	SENS CAP, MBH	80.75	80.75	11.44	28.4	11.44	104.24	104.24	12.42	12.42
	ENT. AIR DB	84.78	84.78	85.74	86	85.74	84.78	84.78	85.74	85.74
	ENT. AIR WB	74.31	74.31	74.5	74.64	74.5	74.31	74.31	74.57	74.57
	LVG. AIR	55	55	55	55	55	55	55	55	55
	ENT. CW DEG. F	45	45	45	45	45	45	45	45	45
	DELTA T CW DEG. F	10.00	10.00	10.00	10.00	10.00	10.00	10.00	10.00	10.00
	GPM	21.55	21.55	3.9	9.87	3.9	36.38	36.38	4.46	4.46
	WPD FT. HEAD	0.54	0.54	2.33	1	2.33	2.92	2.92	5.73	5.73
	FACE VELOCITY	424	424	316	435	316	424	424	316	314
	APD IN. WG	0.224	0.224	0.1	0.46	0.1	0.221	0.221	0.1	0.1
	ROW	2	2	2	4	2	2	2	2	2
HEATING	CAPACITY, MBH	204.69	204.69	48	70.24	48	415.97	415.97	42.38	42.38
	ENT. AIR	50.13	50.13	29.00	53	29	50.13	50.13	54.54	54.54
	LVG. AIR	76.64	76.64	85.03	104	85.03	104.00	104.00	104	104
	ENT. HW DEG. F	160.00	160.00	160.00	160.00	160.00	160.00	160.00	160.00	160.00
	DELTA T HW DEG. F	20.00	20.00	20.00	20.00	20.00	20.00	20.00	20.00	20.00
	GPM	28.48	28.48	4.8	7.03	4.8	41.82	41.82	4.24	4.24
	WPD FT. HEAD	1.28	1.28	0.68	0.58	0.68	0.83	0.83	0.61	0.61
	FACE VELOCITY	424	424	271	435	271	475	475	271	271
	APD IN. WG	0.124	0.124	0.078	0.162	0.078	0.203	0.203	0.096	0.096
	ROW	2	2	2	2	2	2	2	2	2

Notes:
1. Air to Air Energy Recovery Module
2. Direct Drive Plenum Supply and Exhaust Fan
3. Stainless Steel Coil Casing
4. Stainless Steel Drainpan
5. Epoxy E-Coating on Chilled Water & Hot Water Coil

AIR HANDLING UNIT SCHEDULE

UNIT DESIGNATION		AH-1	AH-2	AH-3	AH-4	AH-5
MAKE		TRANE	SEASONS-4	SEASONS-4	SEASONS-4	TRANE
MODEL		CSAA004UB	AH000(/ 6HFK23-027A-HW2.7-12EW	AH000(/ 6HFK23-029A-HW3.5-14EW	AH000(/ 6HGK26-032A-HW3.5-14EW	CSAA004UB
LOCATION		BLDG "B" ROOF	BLDG "B" ROOF	BLDG "B" ROOF	BLDG "B" ROOF	BLDG "B" ROOF
AREA SERVED		3RD FLOOR	3RD FLOOR	1ST FLOOR	2ND FLOOR	3RD FLOOR
SIZE OF ACCESS OPENING						
UNIT TYPE		BLOW-THRU	BLOW-THRU	BLOW-THRU	BLOW-THRU	
OPERATING WEIGHT, LBS.		2,948	8,600	8,650	8,950	2,791
TOTAL AIR, C.F.M.		1,980	9,235	11,375	13,200	1,430
OUTSIDE AIR, C.F.M.		900	2,695	3,270	3,030	680
SUPPLY FAN	MODEL & UNIT SIZE	CLIMATE CHANGER 4				CLIMATE CHANGER 4
	TOTAL STATIC PRESSURE, INCHES W.G.	3.5	6.13	6.18	6.34	4.368
	FAN SIZE & TYPE	12.25"Ø DIRECT DRIVE PLENUM	27" AF SWSI PLENUM	27" AF SWSI PLENUM	27" AF SWSI PLENUM	12.25"Ø DIRECT DRIVE PLENUM
	FAN BRAKE HORSEPOWER (PER FAN)	3.184	15.3	15.9	18.7	1.772
	FAN MOTOR H.P. (PER FAN)	5	20	20	25	2
	FAN SPEED, R.P.M.	3912	1,714	1,735	1,833	3220
	ELECTRICAL SERVICE, VOLTS/PHSE	460/3	460/3	460/3	460/3	460/3
RETURN/EXHAUST FAN	MODEL & UNIT SIZE	CLIMATE CHANGER 4 RETURN FAN				CLIMATE CHANGER 4 RETURN FAN
	TOTAL STATIC PRESSURE, INCHES W.G.	3.149	2.74	3.8	3.77	2.750
	FAN SIZE & TYPE	12.25"Ø DIRECT DRIVE PLENUM	24.5" AF SWSI PLENUM	24.5" AF SWSI PLENUM	24.5" AF SWSI PLENUM	12.25"Ø DIRECT DRIVE PLENUM
	FAN BRAKE HORSEPOWER (PER FAN)	1.662	8.5	10.3	12.7	1.134
	FAN MOTOR H.P. (PER FAN)	2	10	15	15	1.5
	FAN SPEED, R.P.M.	3162	1,692	1,798	1,956	2772
	ELECTRICAL SERVICE, VOLTS/PHSE	460/3	460/3	460/3	460/3	460/3
MAIN COOLING COIL	DESIGN AIR ACROSS COIL, C.F.M.	1,980	11,600	12,000	13,850	1,600
	FACE VELOCITY-F.P.M. MAX.	439				354
	AIR PRESSURE DROP, INCHES W.G.	0.737				0.625
	ENTERING AIR TEMPERATURE, °F DB/WB	80.1/66.3	71.2/61.1	70.9/61.1	72.1/61.4	80/67
	LEAVING AIR TEMPERATURE, °F DB/WB	55/54.46	54.4/53.5	54.6/53.6	53.8/53.1	55/54.70
	GRAND TOTAL CAPACITY, BTUH	71,760	257,908	254,315	328,834	60,940
	TOTAL SENSIBLE CAPACIT, BTUH	54,730	213,442	215,034	278,041	44,090
	CHILLED WATER TEMP. ENT/LVG °F	45/55	45/55	45/55	45/55	45/55
	CHILLED WATER QUANTITY, G.P.M.	14.3	51	66	66	12.15
	WATER PRESSURE DROP, MAX. FT. W.G.	2.83	3.38	3.46	3.6	1.66
	MIN. COIL ROWS	6	6	6	6	4
OSA PRECOOLING COIL	DESIGN AIR ACROSS COIL, C.F.M.	1,980	2,125	2,725	1,855	1,600
	FACE VELOCITY-F.P.M. MAX.	439				354
	AIR PRESSURE DROP, INCHES W.G.	0.737				0.625
	ENTERING AIR TEMPERATURE, °F DB/WB	80.1/66.3	76.8/65.5	77.2/66.0	77.0/63.8	80/67
	LEAVING AIR TEMPERATURE, °F DB/WB	55/54.46	54.2/53.9	55.4/55.0	53.1/52.8	55/54.70
	GRAND TOTAL CAPACITY, BTUH	71,760	74,657	92,377	60,148	60,940
	TOTAL SENSIBLE CAPACIT, BTUH	54,730	52,899	65,495	48,741	44,090
	CHILLED WATER TEMP. ENT/LVG °F	45/55	45/55	45/55	45/55	45/55
	CHILLED WATER QUANTITY, G.P.M.	14.3	15	18.4	12	12.15
	WATER PRESSURE DROP, MAX. FT. W.G.	2.83	1.65	2.45	1.07	1.66
	MIN. COIL ROWS	6	6	6	6	4
HEATING COIL	DESIGN AIR ACROSS COIL, C.F.M.	1,980	11,600	12,000	13,850	1,600
	FACE VELOCITY-F.P.M. MAX.	495				400
	AIR PRESSURE DROP, INCHES W.G.	0.181				0.077
	ENTERING AIR TEMPERATURE, °F DB	44.65	68.8	68.1	69	53.4
	LEAVING AIR TEMPERATURE, °F DB	94.25	90.5	94.8	92.2	89.65
	GRAND TOTAL CAPACITY, BTUH	106,500	274,988	349,079	350,502	62,900
	TOTAL SENSIBLE CAPACITY, BTUH	-	-	-	-	-
	HOT WATER TEMP. ENT/LVG °F	180/160	160/119.0	160/132.3	160/124.4	180/160
	HOT WATER QUANTITY, G.P.M.	10.66	13.4	25.2	19.7	8.29
	WATER PRESSURE DROP, MAX. FT. W.G.	0.6	1.12	3.75	2.39	0.83
	MIN. COIL ROWS	2	2	2	2	1
FILTERS	OA MIST ELIMINATOR PRE-FILTER	PLEATED MEDIA	1" ALUMINUM MESH	1" ALUMINUM MESH	1" ALUMINUM MESH	PLEATED MEDIA
	OA MIST ELIMINATOR THICKNESS	2"	1"	1"	2"	2"
	OA MIST ELIMINATOR FACE VELOCITY, F.P.M.	356	483	500	577	288
	OA MIST ELIMINATOR PRESS. DROP, INCHES W.G.	0.594				0.569
	PRE-FILTER TYPE	PLEATED MEDIA	PLEATED MEDIA	PLEATED MEDIA	PLEATED MEDIA	PLEATED MEDIA
	PRE-FILTER THICKNESS	2"	2"	2"	2"	2"
	PRE-FILTER MERV RATING	8	8	8	8	8
	PRE-FILTER FACE VELOCITY, F.P.M.	356	322	333	385	288
	FILTER PRESS. DROP, INCHES W.G.	0.594				0.569
	PRIMARY FILTER TYPE	4 IN. CARTRIDGE	12" RIGID	12" RIGID	12" RIGID	4 IN. CARTRIDGE
	PRIMARY FILTER THICKNESS	4"	12"	12"	12"	4"
	PRE-FILTER MERV RATING	90%	11%	11%	90%	90%
	PRIMARY FILTER FACE VELOCITY, F.P.M.	356	322	333	385	288
	FILTER PRESS. DROP, INCHES W.G.	0.748				0.717
	PRIMARY FILTER MERV RATING	14	13	13	13	14
	MCA		50	56	64	
	MOCP		70	70	90	
NOTES::		1,2,3,4,5	1,2,3,4,5,6,7	1,2,3,4,5,6,7	1,2,3,4,5,6,7	1,2,3,4,5

NOTES:
1. PROVIDE UNIT WITH ACCESS SECTION. STARTER/VFD LOCATED INSIDE AIR HANDLING UNIT ___ FROM DIRECT SUNLIGHT, FOR SUPPLY & RETURN FAN.
2. PROVIDE ECONOMIZER & FILTER SECTIONS.
3. EVAPORATORS COILS FOR AIR HANDLING UNITS AT LOCATIONS WITHIN TWO MILES FROM OCEAN SHALL BE FURNISHED WITH COPPER PLATE FINS MECHANICALLY BONDED TO ENHANCED COPPER TUBES SHEETS AND BRAZED JOINTS. COATED COILS ARE NOT ACCEPTABLE.
4. PROVIDE MULTI-ZONE.
5. PROVIDE ENERGY RECOVERY WHEEL.
6 PROVIDE OA PRE-COOL CHILLED WATER COIL.
7. PROVIDE OA MIST ELIMINATOR PRE-FILTER SECTION & FINAL FILTER SECTION. ERS OUTSIDE AIR FILTER SECTION, ORS ORS EXHAUST AIR FILTER SECTION.

PUMP SCHEDULE

UNIT DESIGNATION	P-1	P-2	P-3	P-4	P-5	P-6	P-7	P-8	P-9	P-10
DUTY	HOT WATER	HOT WATER	DEDICATED HW	DEDICATED HW	DEDICATED HW	DEDICATED HW	CHILLED WATER	CHILLED WATER	CH-1	CH-2
GPM FLOW	460	460	115	115	115	115	500	500	250	250
TOTAL DYNAMIC HEAD, FT. OR WATER	140	140	25	25	25	25	140	140	40	40
SUCTION/DISCHARGE SIZE, INCHES	4/3	4/3	33	3/3	3/3	3/3	4/3	4/3	4/3	4/3
PUMP EFFICIENCY	80.4%	80.4%	70.0%	70.0%	70.0%	70.0%	82.0%	82.0%	81.6%	81.6%
NPSHR	14.46	14.46	5.51	5.51	5.51	5.51	14.89	14.89	5.24	5.24
MOTOR RPM	3550	3550	1750	1750	1750	1750	3550	3550	1750	1750
BHP AT DESIGN	20.82	20.82	1.06	1.06	1.06	1.06	21.75	21.75	3.69	3.69
MOTOR HORSEPOWER	25	25	1.5	1.5	1.5	1.5	25	25	5	5
ELECTRICAL SERVICE, VOLTS/PHASE	460/3	460/3	460/3	460/3	460/3	460/3	460/3	460/3	460/3	460/3
FULL LOAD AMPS	28.6	28.6	3	3	3	3	28.6	28.6	6.6	6.6
MCA, AMPS	35.75	35.75	3.75	3.75	3.75	3.75	35.75	35.75	8.1	8.1
MCOP, AMPS	60	30	15	15	15	15	60	60	15	15
MANUFACTURER	BELL & GOSSETT	BELL & GOSSETT	WEIMAN	WEINMAN	WEINMAN	WEINMAN	BELL & GOSSETT	BELL & GOSSETT	BELL & GOSSETT	BELL & GOSSETT
MODEL NUMBER	SERIES e-1510, 3 AD	SERIES e-1510, 3 AD	3007-181	3007-181	3007-181	3007-181	SERIES e-1510, 3AD	SERIES e-1510, 3AD	SERIES e-1510, 3AD	SERIES e-1510, 3AD
FRAME SIZE	256T	256T	145T	145T	145T	145T	256T	256T	184T	184T
WEIGHT, LBS.	468	468	185	185	185	185	638	638	239	239
REMARKS	1	1,2	3	3	3	3	1	1,2		

NOTES:
1. PROVIDE VFD.
2. 100% STANDBY PUMP.
3. DEDICATED PUMP FOR EACH BOILER, INSTALLED BY MECHANICAL CONTRACTOR

INSULATION OF DUCTS

DUCT LOCATION	MINERAL FIBER BLANKET, 0.6 lb/cf	BLANKET DUCT LINER, 1.5 to 3 lb/cf	MINERAL FIBER BOARD, 3.0 to 10 lb/cf
ON ROOF ON EXTERIOR OF BUILDING	3"	1-1/2"	1-1/2"
ATTICS, GARAGES AND CRAWL SPACES	2"	1"	1"
IN WALLS WITHIN FLOOR-CEILING SPACES	1"	1"	1"

INSULATION MAY BE OMITTED ON THAT PORTION OF A DUCT WHICH IS WITHIN A WALL- OR FLOOR-CEILING SPACE WHERE:

A. BOTH SIDES OF THE SPACE ARE EXPOSED TO CONDITIONED AIR
B. THE SPACE IS NOT VENTILATED
C. THE SPACE IS NOT USED AS A RETURN AIR PLENUM
D. THE SPACE IS NOT EXPOSED TO UNCONDITIONED AIR

CEILINGS WHICH FORM PLENUMS NEED NOT BE INSULATED

FAN SCHEDULE

UNIT DESIGNATION		EF-26	EF-28	EF-31
LOCATION		BLDG."B" ROOF	BLDG."B" ROOF	BLDG."B" ROOF
AREA SERVED		SEE PLANS	SEE PLANS	SEE PLANS
MAKE		GREENHECK	GREENHECK	GREENHECK
MODEL		CUBE 161XP	CUBE 161XP	CUBE 101XP
BACKDRAFT DAMPER		YES	YES	YES
MOUNTING		BLDG. 'B' ROOF	BLDG. 'B' ROOF	BLDG. 'B' ROOF
OPERATING CONTROL		INTERLOCK WITH RTU-2B	INTERLOCK WITH RTU-1B	24 HR OPERATION
OPERATING WEIGHT, LBS.		87	87	76
FAN	FAN TYPE	CENTRIFUGAL	CENTRIFUGAL	CENTRIFUGAL
	AIR VOLUME (CFM)	1500	1500	400
	TOTAL STATIC PRESSURE (IN. W.G.)	1.5	1.5	1
	NOISE LEVEL (SONES)	15.9	15.9	9.1
MOTOR	MAXIMUM RPM	2525	2525	2045
	MAXIMUM BHP	0.9	0.9	0.17
	WATTS	---	---	---
	HP	1	1	1/4
	VOLTS/PHASE	120/1	120/1	120/1
	DRIVE	BELT	BELT	BELT
NOTES		*	*	**

NOTES:
* PROVIDED WITH VFD, PREFABRICAQTED ROOF CURB & DISCONNECT SWITCH
** PROVIDED WITH EXPLOSION PROOF MOTOR, SPARK-PROOF CONSTRUCTION, PREFABRICATED ROOF CURB, DISCONNECT SWITCH.

AIR COOLED CHILLER SCHEDULE

UNIT DESIGNATION	CH-1	CH-2
MAKE	TRANE	TRANE
MODEL	CGAM120	CGAM120
LOCATION	BLDG "B" ROOF	BLDG "B" ROOF
UNIT TYPE	SCROLL COMPRESSOR	SCROLL COMPRESSOR
NOMINAL CAPACITY, TONS	120	120
REFRIGERANT	R-410A	R-410A
REFRIGERANT CHARGE, LBS	73.9	73.9
SHIPPING WEIGHT, LBS	6762	6762
UNIT OVERALL DIMENSIONS, INCHES	166"Lx89"Wx93"H	166"Lx89"Wx93"H
OPERATING WEIGHT, LBS.	6884	6884
CONDENSER	ENTERING/LEAVING WATER TEMPERATURE, DEG. F.	54/44	54/44
	WATER FLOW, GPM	250	250
	WATER PRESSURE DROP, FT. W.G.	16.2	16.2
	CIRCUIT/COMPRESSORS	2/4	2/4
	EXCHANGER TYPE	BRAZE PLATE	BRAZE PLATE
	WATER STORAGE VOLUME, GALS	11.5	11.5
	FOULING FACTOR	0.0001	0.0001
EVAPORATOR	ENTERING WATER TEMPERATURE, DEG. F.	-	-
	LEAVING WATER TEMPERATURE, DEG. F.	-	-
	WATER FLOW, GPM	-	-
	WATER PRESSURE DROP, FT. W.G.	-	-
	WATER STORAGE VOLUME, GALS	-	-
	FOULING FACTOR	-	-
UNIT KW		142.1	142.1
MIN. EFFICIENCY, PER ARI 550/590		10 EER	10 EER
ELECTRICAL SERVICE, VOLTS/PHASE		460/3	460/3
RUN LOAD AMPS		202.4	202.4
LOCKED ROTOR AMPS		1280	1280
MINIMUM CIRCUIT AMPACITY		244	244
MAXIMUM OVERCURRENT PROTECTION		250	250

NOTES:
CH-1 AND CH-2 CONDENSER COILS FOR AIR COOLED CHILLERS AT LOCATION WITH TWO MILES FROM OCEAN SHALL BE FURNISHED WITH COPPER PLATE FINS MECHANICALLY BONDED TO ENHANCED COPPER TUBES WITH COPPER TUBE SHEETS AND BRAZED JOINTS. COATED COILS ARE NOT ACCEPTABLE.

ROOFTOP HEAT PUMP AC UNIT SCHEDULE

UNIT DESIGNATION	RTU-1A	RTU-2A	RTU-3A
MAKE	TRANE	TRANE	TRANE
MODEL	WSH 150	WSC 120	WSH 150
LOCATION	BLDG "A" ROOF	BLDG "A" ROOF	BLDG "A" ROOF
AREA SERVED	1st FLOOR	1st FLOOR	1st FLOOR
NOMINAL CAPACITY, TONS	12.5	10	12.5
OPERATING WEIGHT, LBS.	2203	1407	2203
FAN	TOTAL AIR, C.F.M.	5000	3400	5000
	OUTSIDE AIR, C.F.M.	1600	800	1600
	EXTERNAL S.P. IN W.G	1.25	1.25	1.25
	FAN MOTOR H.P. (NON-OVERLOAD)	3.0	3.6	3.0
	FAN SPEED, R.P.M.	1740	---	1740
	DRIVE	BELT	BELT	BELT
PERFORMANCE	GROSS COOLING CAPACITY, MBTUH	155,300	123,800	155,300
	SENSIBLE COOLING CAPACITY @ 67-F WB EAT	133,070	103,400	133,070
	SEER/EER	---/10.6	---/11.2	---/10.6
	SOUND RATING, BELS	---	87	---
	HEATING CAP.-MBTUH @ 47°F	136,330	108,420	136,330
	HSPF/COP	---/3.2	---/2.40	---/3.2
ELECTRICAL	VOLTS/PHASE	208/3	208/3	208/3
	COMPRESSOR RLA	2@ 22.4/149	2@ 9.0/9.0	2@ 22.4/149
	OUTDOOR FAN FLA	3.2	1.5	3.2
	INDOOR FAN FLA	10.6	4.3	10.6
	SUPPLEMENTARY HEAT, KW	-	-	-
	MINIMUM CIRCUIT AMPACITY	68	26.1	68
	MAXIMUM OVERCURRENT PROTECTION	80	35	80
REMARKS		1	1	1

NOTES:
1. EVAPORATOR COILS AND CONDENSER COILS OF RTU-1A, RTU-2A AND RTU-3A AT LOCATIONS WITHIN TWO MILES FROM OCEAN SHALL BE FURNISHED WITH COPPER PLATE FINS MECHANICALLY BONDED TO ENHANCED COPPER TUBES WITH COPPER TUBE SHEETS AND BRAZED JOINTS. COATED COILS ARE NOT ACCEPTABLE.
2. ECONOMIZER CYCLE.
3. DEMAND CONTROL VENTILATION.

GAS-ELECTRIC A/C UNIT SCHEDULE

UNIT DESIGNATION		RTU-1B	RTU-2B
NOMINAL COOLING CAPACITY, TONS		4.5	4.5
AREA SERVED			0
MAKE		TRANE	TRANE
MODEL		HORIZON B048	HORIZON B048
OPERATING WEIGHT, LBS.		1325	1325
REFRIGERANT TYPE			
REMARKS		1,2,3,4,5,6	1,2,3,4,5,6
FAN	TOTAL AIR, CFM	1,000	1000
	OUTSIDE AIR, CFM	1,000	1000
	EXTERNAL S.P.-IN.W.G.	1.3	1.3
	FAN RPM/BHP	1634/0.57	1634/0.57
	FAN MOTOR HP (NON-OVERLOADING)	2.5	2.5
	DRIVE	BELT	BELT
PERFORMANCE	GROSS COOLING CAPACITY, BTUH	54,000	54000
	SENSIBLE COOLING CAPACITY @67 F, WB EAT	43,700	43700
	EER	12.5	12.5
	IPLV	-	-
	SOUND RATING dBA		
	HEATING INPUT/OUTPUT MBH	75000	75000
	HEATING FUEL	NAT. GAS	NAT. GAS
	AFUE% / SSE %		
ELECTRICAL	VOLTS/PHASE	480/3	480/3
	COMPRESSOR RLA	6.4	6.4
	OUTDOOR FAN FLA	2.1	2.1
	COMBUSTION AIR FAN FLA	-	-
	INDOOR FAN FLA	3.6	3.6
	POWER EXHAUST FLA	-	-
	MINIMUM CIRCUIT AMPACITY	14.7	14.7
	MAXIMUM OVERCURRENT PROTECTION	20	20

NOTES:
1. VIBRATION ISOLATION ROOF CURB, SELF-LEVELING FOR PITCHED ROOF
2. HUMIDIMIZER SYSTEM
3. HORIZONTAL DISCHARGE.
4. PROVIDE ECM MOTOR FOR INDOOR BLOWER.
5. PROVIDE MERV-13 FILTER.
6. PROVIDE CONDENSER HAND GUARD.

PIPE INSULATION THICKNESS

FLUID TEMP. RANGE, (°F)	CONDUCTIVITY RANGE (IN Btu- Inch per hour per square foot per °F)	INSULATION MEAN RATING TEMP. (°F)	NOMINAL PIPE DIAMETER, (in inches)					
			Runouts up to 2	1 and less	1.25-2	2.5-4	5-6	8 and larger
			INSULATION THICKNESS REQUIRED (in inches)					
Space heating systems (steam, steam condensate and hot water)								
Above 350	0.32-0.34	250	1.5	2.5	2.5	3	3.5	3.5
251-350	0.29-0.31	200	1.5	2	2.5	2.5	3.5	3.5
201-250	0.27-0.30	150	1	1.5	1.5	2	2	3.5
141-200	0.25-0.29	125	0.5	1.5	1.5	1.5	1.5	1.5
105-140	0.24-0.28	100	0.5	1	1	1	1.5	1.5
Service water-heating systems (recirculating sections, all piping in electric trace tape systems, and the first 8 feet of piping from the storage tank for nonrecirculating systems)								
Above 105	0.24-0.28	100	0.5	1	1	1	1.5	1.5
Space cooling systems (chilled water, refrigerant and brine)								
40-60	0.23-0.27	75	0.5	0.5	0.5	1	1	1
Below 40	0.23-0.27	75	1	1	1.5	1.5	1.5	1.5

EXPANSION TANK SCHEDULE

UNIT DESIGNATION	ET-1	ET-2
DUTY	HOT WATER	CHILLED WATER
LOCATION	BLDG. "C" BOILER RM.	BLDG. "B" ROOF
MANUFACTURER	TACO	TACO
MODEL NUMBER	CBX 600	CBX 500
TYPE	VERTICAL BLADDER	VERTICAL BLADDER
TOTAL CAPACITY, GALLONS	160	132
ACCEPTANCE VOLUME, GALLONS	100	61
DIMENSIONS, DIA x LENGTH	30X89	24X80
SHIPPING WEIGHT, LBS.	1850	1526
NOTES:		

AIR SEPARATOR SCHEDULE

UNIT DESIGNATION	AS-1	AS-2
DUTY	HOT WATER	CHILLED WATER
LOCATION	BLDG. "C" BOILER RM.	BLDG. "B" ROOF
MANUFACTURER	BELL AND GOSSETT	BELL AND GOSSETT
MODEL NUMBER	R-5F	R-6F
TYPE	FLANGED, WITH STRAINER	FLANGED, WITH STRAINER
SIZE	5"	6"
GPM/PRESSURE DROP FT. W.G.	460/2.7	500/1.5
DIMENSIONS, WIDTH X HEIGHT	24X37	26X44
OPERATING WEIGHT, LBS.	429	579
NOTES:		

4-PIPES FAN COIL UNIT SCHEDULE

UNIT DESIGNATION		FC-1	FC-2	FC-3	FC-4	FC-5
MANUFACTURER		TRANE	TRANE	TRANE	TRANE	TRANE
MODEL		FCCB04	FCCB04	FCCB04	FCCB04	BCHD054A1
LOCATION		BLDG "B"	BLDG "B"	BLDG "B"	BLDG "B"	BLDG "B"
AREA SERVED		SEE PLANS	SEE PLANS	SEE PLANS	SEE PLANS	SEE PLANS
TYPE		HIGH STATIC ECM	HIGH STATIC ECM	HIGH STATIC ECM	HIGH STATIC ECM	ECM
OUTSIDE AIR, CFM		30	30	30	30	100
SUPPLY F

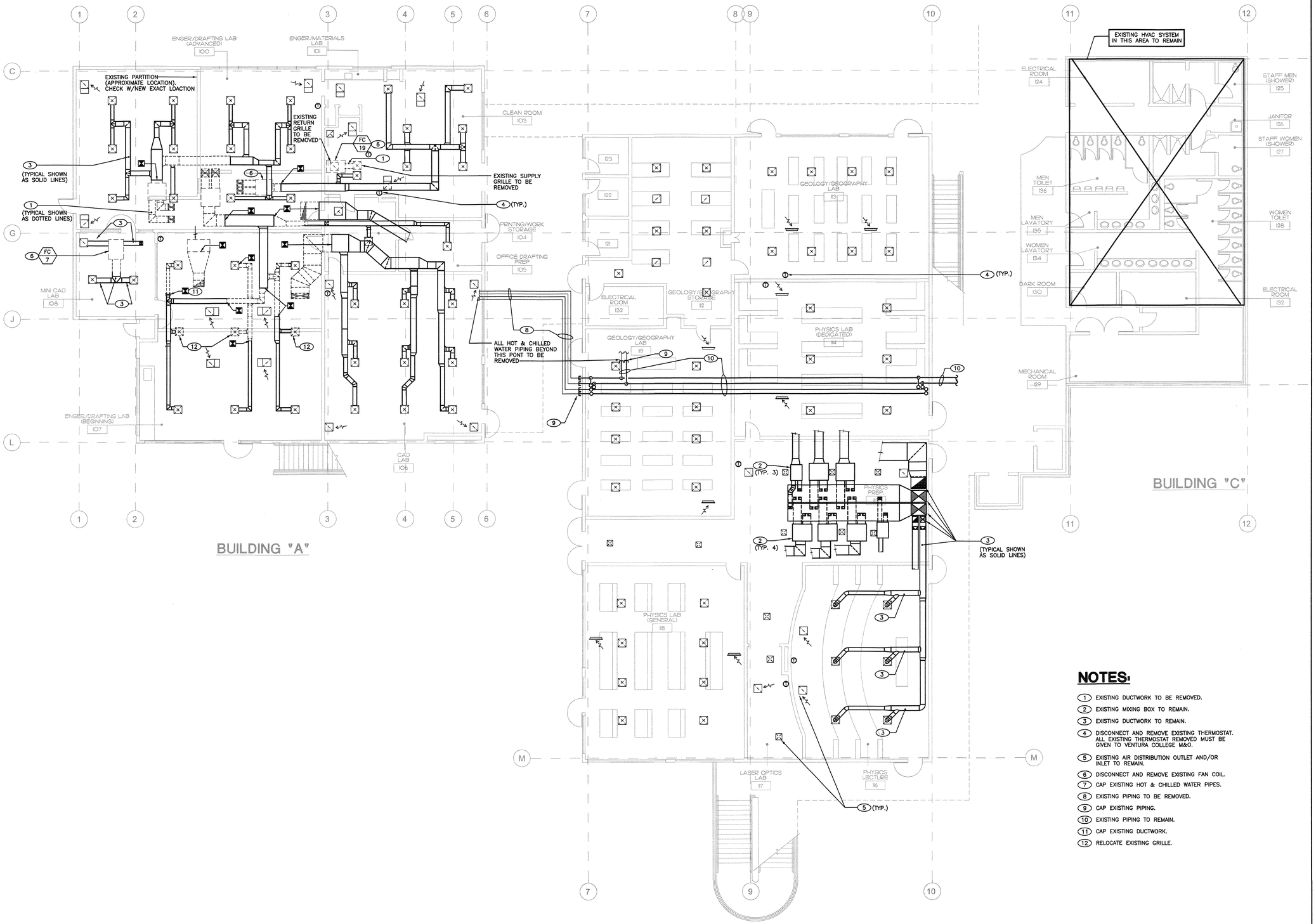

NOTES:

1. EXISTING DUCTWORK TO BE REMOVED.
2. EXISTING MIXING BOX TO REMAIN.
3. EXISTING DUCTWORK TO REMAIN.
4. DISCONNECT AND REMOVE EXISTING THERMOSTAT. ALL EXISTING THERMOSTAT REMOVED MUST BE GIVEN TO VENTURA COLLEGE M&O.
5. EXISTING AIR DISTRIBUTION OUTLET AND/OR INLET TO REMAIN.
6. DISCONNECT AND REMOVE EXISTING FAN COIL.
7. CAP EXISTING HOT & CHILLED WATER PIPES.
8. EXISTING PIPING TO BE REMOVED.
9. CAP EXISTING PIPING.
10. EXISTING PIPING TO REMAIN.
11. CAP EXISTING DUCTWORK.
12. RELOCATE EXISTING GRILLE.

1 FIRST FLOOR DEMOLITION PLAN

SCALE: 1/8"=1'-0"

GRAPHIC SCALE: 1/8" = 1'- 0"

0 5 10 15 30

Ventura College Campus Map

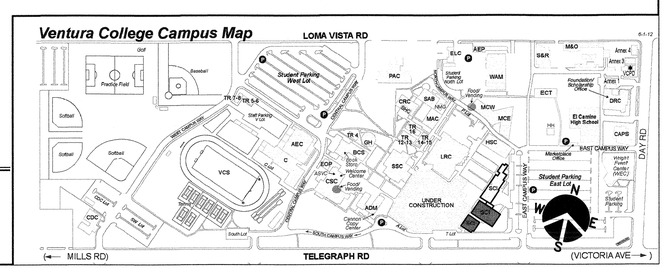

J & S CONSULTING ENGINEERS, INC.
ELECTRICAL ▫ MECHANICAL
FIRE PROTECTION
3111 Winona Ave, #102
Burbank, Ca 91504
Tel.: (818) 841-0303
Fax: (818) 841-8531
470 Helga Ct. Unit A
Newbury Park, Ca. 91320
Tel. (818) 398-5793
Fax: (818) 841-8531
www.jandsconsulting.com
E-Mail: jsmail@jandsconsulting.com
PROJECT No. 45461

LICENSED ARCHITECT JAMES N. TAYLOR C-22205 APRIL 30, 2015 RENEWAL DATE STATE OF CALIFORNIA

REGISTERED PROFESSIONAL ENGINEER ANNE B. DE SILVA No. M22816 EXPIRES 09-30-18 MECHANICAL STATE OF CALIFORNIA

VENTURA COLLEGE

4667 TELEGRAPH ROAD, VENTURA, CALIFORNIA, 93003
VENTURA COUNTY COMMUNITY COLLEGE DISTRICT

MATH & SCIENCE COMPLEX

IDENTIFICATION STAMP
DIV. OF THE STATE ARCHITECT
OFFICE OF REGULATION SERVICES
APPL. 03- 117754
AC FLS SS
DATE JUL 05 2017

NO.	DATE	DESCRIPTION	BY
	12.19.16	DSA SUBMITTAL	

REVISIONS

DRAWN BY:	S.L.
CHECKED BY:	A.D.S.
DATE	05.12.17
JOB NO:	45461

SHEET TITLE

MECHANICAL FIRST FLOOR DEMOLITION PLAN

SHEET

M-1.1

DWG # 41 OF 82

Job No. 45461, FILE: N:\45461-Instructs\DSA\M1-1.dwg, 8x11, Ref. Files: A-Grid.dwg, A-1128.dwg, Saved: dwg
Plot Date: 05-11-17, 10:42am, Plot scale: 1=1.00 %, by: S.L. Prev. plot: 05-11-17, 10:10am

05-12-17 DSA SUBMITTAL

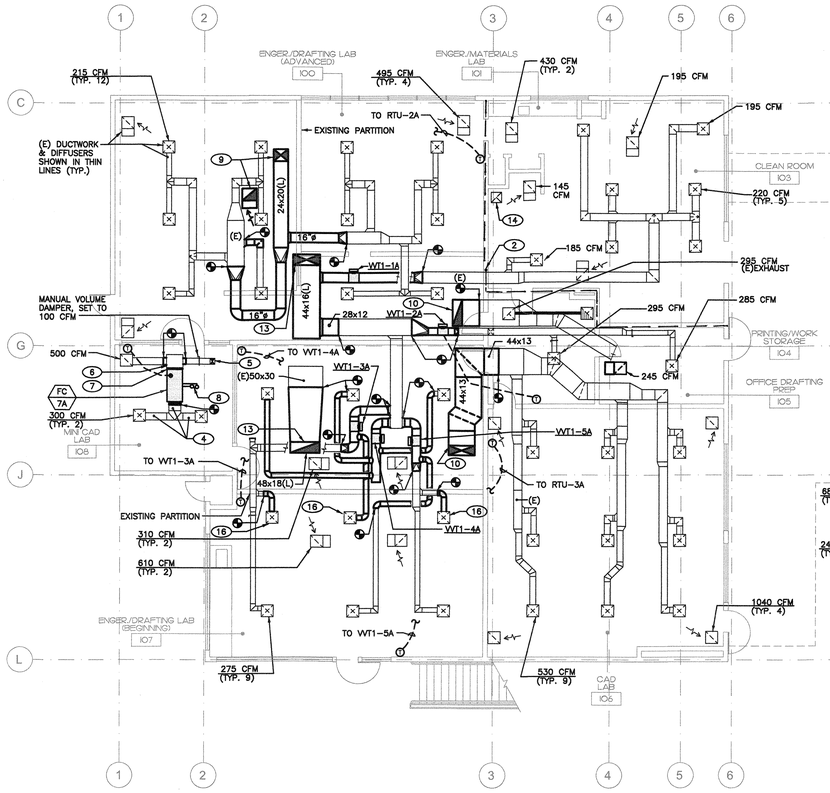

BUILDING "A"

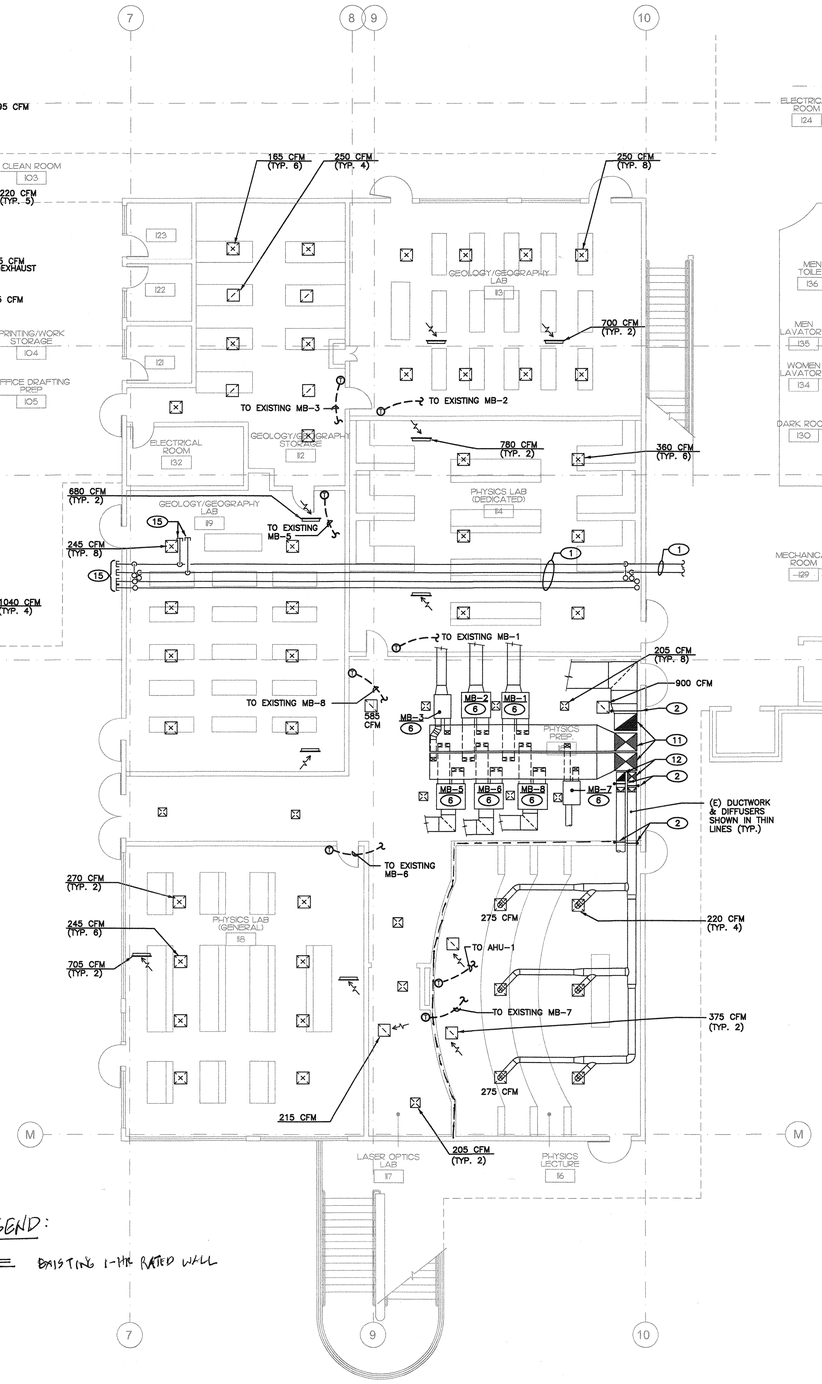

BUILDING "B"

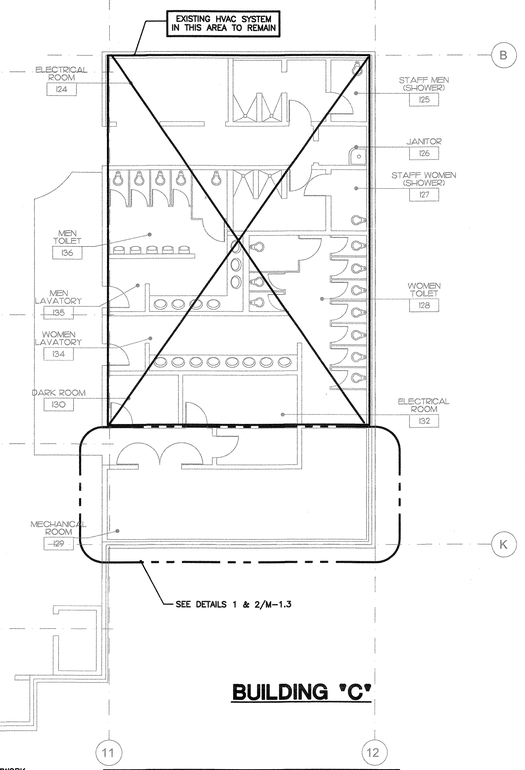

BUILDING "C"

VVT DAMPER SCHEDULE

TRANE VariTrac

UNIT DESIGNATION	DAMPER SIZE (INCHES)	NOMINAL CFM	OPERATING WEIGHT (LB)
VVT1-1A	16	1620	27
VVT1-2A	12	600	23
VVT1-3A	14	900	25
VVT1-4A	14	900	25
VVT1-5A	14	900	25

WALL LEGEND:

EXISTING 1-HR RATED WALL

GENERAL NOTES:

1. ALL DUCTWORK & DIFFUSERS SHOWN ON THE PLAN ARE EXISTING TO REMAIN, UNLESS NOTED OTHERWISE.
2. EXISTING DIFFUSERS TO BE CLEANED AND BALANCED TO AIR FLOW SHOWN.
3. ALL EXISTING DUCTWORK SUPPLY AIR, RETURN AIR, AND EXHAUST AIR TO BE REUSED (UNLESS NOTED OTHERWISE) TO BE INTERNALLY CLEANED. CLEANING TO BE PERFORMED PER SPECIFICATION 23 0130.51.
4. SEISMIC BRACING OF ALL NEW PIPING AND DUCTWORK SHALL BE DESIGN-BUILD BY THE CONTRACTOR. THE CONTRACTOR SHALL SUBMIT ENGINEERED SHOP DRAWINGS FOR ALL PROPOSED SEISMIC RESTRAINT SYSTEMS.

NOTES:

1. EXISTING HOT & CHILLED WATER PIPES TO REMAIN.
2. EXISTING FIRE DAMPER, TO REMAIN
3. PROVIDE FIRE DAMPER WITH ACCESS PANEL.
4. EXISTING DUCTWORK TO REMAIN.
5. EXISTING 10x8 DUCT UP TO ROOF TO REMAIN.
6. EXISTING MIXING BOX TO REMAIN. VERIFY IF MIXING BOX IS IN GOOD OPERATING CONDITION. MAKE NECESSARY REPAIR AND REPLACEMENT.
7. FLEXIBLE CONNECTION.
8. REFRIGERANT PIPES UP TO ROOF. SEE M-4.2 FOR CONTINUATION.
9. 24x20(L) SUPPLY & RETURN DUCTWORK UP TO RTU-1A ON THE ROOF. SEE M-4.2 FOR CONTINUATION.
10. 44x16(L) SUPPLY & RETURN DUCTWORK UP TO RTU-3A ON THE ROOF, SEE M-4.2 FOR CONTINUATION.
11. EXISTING 28x58 SUPPLY & RETURN DUCTWORK UP TO AH-3 ON THE ROOF. SEE M-4.2 FOR CONTINUATION.
12. EXISTING 15x16 SUPPLY & RETURN DUCTWORK UP TO AH-5 ON THE ROOF. SEE M-4.2 FOR CONTINUATION.
13. 44x16(L) SUPPLY & 48x18(L) RETURN DUCTWORK UP TO RTU-2A ON THE ROOF. SEE M-4.2 FOR CONTINUATION.
14. EXISTING 12x10 EXHAUST DUCT UP TO (E) EF-27.
15. CAPPED EXISTING PIPES.
16. RELOCATED EXISTING DIFFUSER.

1 FIRST FLOOR PLAN
SCALE: 1/8"=1'-0"

GRAPHIC SCALE: 1/8" = 1'- 0"
0 5 10 15 30

Ventura College Campus Map

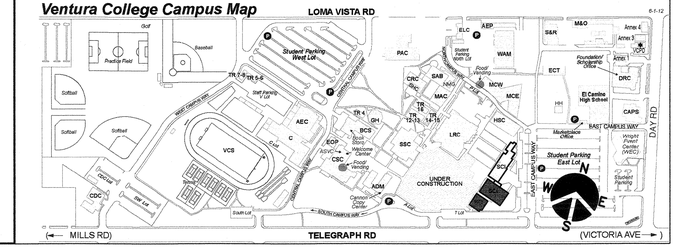

J & S CONSULTING ENGINEERS, INC.
ELECTRICAL • MECHANICAL
FIRE PROTECTION
3111 Winona Ave., #102
Burbank, Ca 91504
Tel.: (818) 841-0303
Fax: (818) 841-8531
470 Helga Ct. Unit A
Newbury Park, Ca. 91320
Tel. (818) 398-5793
Fax: (818) 841-8531
www.jandsconsulting.com
E-Mail: jsmall@jandsconsulting.com

PROJECT No. 45461

LICENSED ARCHITECT JOHN ANTHONY SMALL III C-22205 APRIL 30, 2019 RENEWAL DATE STATE OF CALIFORNIA

REGISTERED PROFESSIONAL ENGINEER JAMES B. DE SILVA No. M22816 EXPIRES 09-30-18 MECHANICAL STATE OF CALIFORNIA

VENTURA COLLEGE

4667 TELEGRAPH ROAD, VENTURA, CALIFORNIA, 93003
VENTURA COUNTY COMMUNITY COLLEGE DISTRICT

MATH & SCIENCE COMPLEX

IDENTIFICATION STAMP
DIV. OF THE STATE ARCHITECT
OFFICE OF REGULATION SERVICES
APPL. 03- 117754
AC — FLS — SS
DATE JUL 05 2017

NO.	DATE	DESCRIPTION	BY
	12.19.16	DSA SUBMITTAL	

REVISIONS

DRAWN BY: S.L.
CHECKED BY: A.D.S.
DATE 05.12.17
JOB NO: 45461

SHEET TITLE

MECHANICAL FIRST FLOOR PLAN

SHEET

M-1.2

DWG # 42 OF 82

Job No.:45461 | Date: 5/12/2017 | User:jsmall | M:\J & S Projects\45461 Ventura College Math & Science Complex\Revit\Mech\45461_M1-1.rvt | Plot Time: 5/12/2017 10:49:39 AM | By: S.L. | Plot Path: M:\J & S Projects\45461 Ventura College Math & Science Complex\Revit\Mech\Plot\45461_M1-1.dwg | Plot Style: JSDetailed.ctb | Plot Scale: 1:1 | Plot Paper: 24x36 | Plot Orientation: Landscape | Plot Offset: 0.00,0.00 | Plot Area: Sheet | Plot Date: 5/12/2017 10:49:39 AM | Plot By: S.L. | Xrefs: 45461_M1-1.dwg, x-0045.dwg, x-1516.dwg, Sheet.dwg

05-12-17 DSA SUBMITTAL

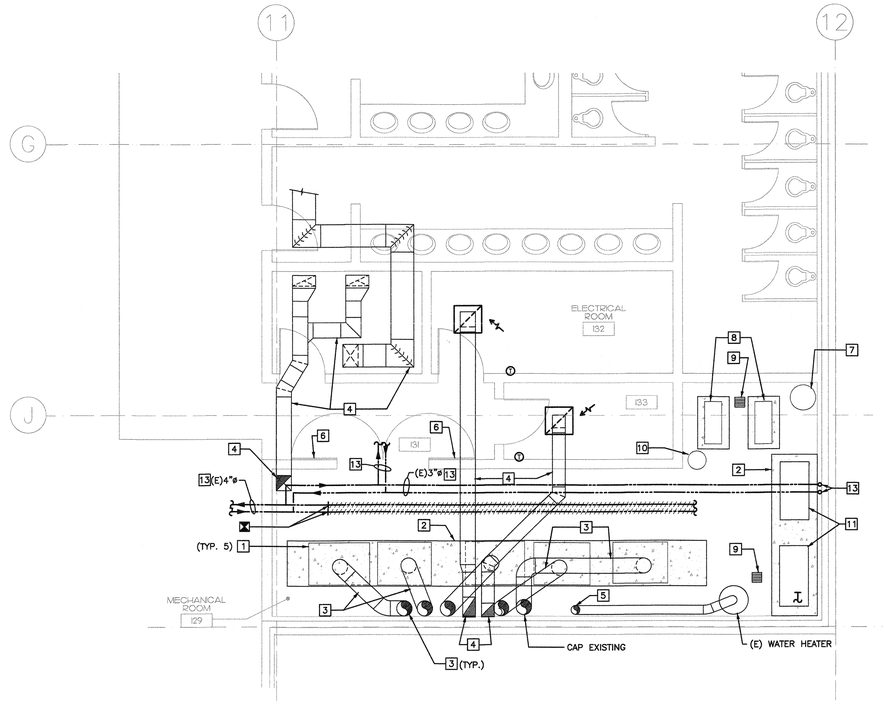

1 BUILDING "C" MECHANICAL ROOM 128 DEMOLITION PLAN

SCALE: 1/4"=1'-0'

NOTE: ALL EXISTING PIPING IN MECHANICAL ROOM TO & FROM BOILERS B-1 THRU B-5, PUMPS P-1 & P-2, AIR SEPARATOR AS-1, EXPANSION TANK ET-1 & POT FEEDER TO BE REMOVED, UNLESS NOTED OTHERWISE.

DEMOLITION NOTES:

1. DISCONNECT AND REMOVE EXISTING BOILERS.
2. EXISTING CONCRETE PAD TO REMAIN.
3. EXISTING FLUE TO BE REMOVED.
4. EXISTING DUCTWORK TO REMAIN.
5. EXISTING FLUE TO REMAIN.
6. EXISTING COMBUSTION AIR LOUVER TO REMAIN.
7. DISCONNECT AND REMOVE EXISTING EXPANSION TANK.
8. DISCONNECT AND REMOVE EXISTING PUMPS.
9. EXISTING FLOOR SINK TO REMAIN.
10. DISCONNECT AND REMOVE EXISTING POT FEEDER.
11. EXISTING AIR COMPRESSORS TO REMAIN.
12. EXISTING PIPING TO BE REMOVED.
13. EXISTING PIPING TO REMAIN.

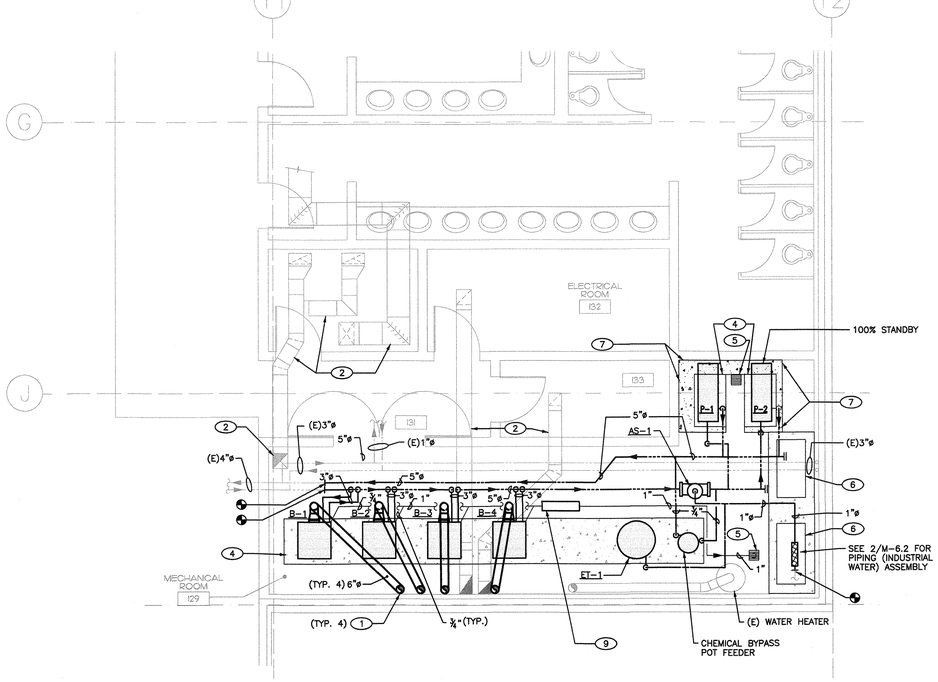

2 BUILDING "C" MECHANICAL ROOM 129 PLAN

SCALE: 1/4"=1'-0'

NOTES:

1. SAF-T VENT C1 PLUS, DOUBLE WALL AL29-4C 6"ø FLUE UP TO ROOF. PROVIDE UNIVERSAL BOILER ADAPTER. PROVIDE 1-HR RATED FLUE VENT ENCLOSURE ON SECOND AND THIRD FLOOR.
2. EXISTING DUCTWORK
3. SEE M-4.2 FOR CONTINUATION.
4. EXISTING CONCRETE PAD.
5. EXISTING FLOOR SINK.
6. EXISTING AIR COMPRESSOR.
7. EXTENDED CONCRETE PAD.
8. MANUAL VOLUME DAMPER.
9. CONDENSATE NEUTRALIZING TUBES MODEL JM-50.
10. SEE 2/M-6.2 FOR HOT WATER PIPING DIAGRAM.
11. SEE 2/M-5.1 FOR CHEMICAL BYPASS FEEDER PIPING DETAILS.
12. SEE 13/M-5.1 FOR BOILER PIPING DETAILS & 14/M-5.1 FOR IN-LINE PUMP PIPING DETAIL.
13. SEE 1/M-5.1 FOR BASE MOUNTED PUMP PIPING DETAIL.
14. SEE 7/M-5.1 FOR INDUSTRIAL WATER MAKE-UP ASSEMBLY.
15. BC CONTROLLER, MITSUBISHI MODEL CMB-P1010NU-G, 10 BRANCHES, 208V/1ø, MCA=0.83, MOCP=15A, OPERATING WEIGHT=94 LBS.

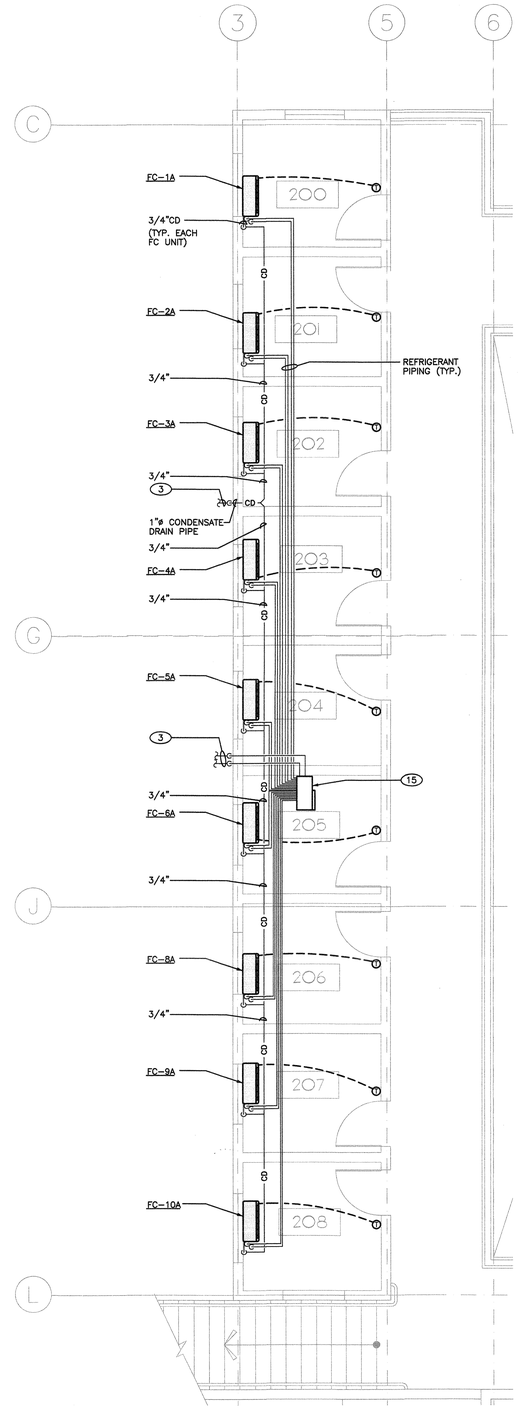

3 BUILDING "A" ROOMS 200 THRU 208 PLAN

SCALE: 1/4"=1'-0'

GRAPHIC SCALE: 1/4" = 1'- 0"

0 2 4 6 12

J & S CONSULTING ENGINEERS, INC.
ELECTRICAL - MECHANICAL
FIRE PROTECTION
3111 Winona Ave., #102
Burbank, Ca 91504
Tel.: (818) 841-0303
Fax: (818) 841-8531
470 Helga Ct. Unit A
Newbury Park, Ca. 91320
Tel. (818) 398-5793
Fax: (818) 841-8531
www.jandsconsulting.com
E-Mail: jsmail@jandsconsulting.com
PROJECT No. 45461

LICENSED ARCHITECT — WILLIAM ANN SAYLOR — C-22205 — APPROVAL DATE: APRIL 30, 2018 — RENEWAL DATE: — STATE OF CALIFORNIA

REGISTERED PROFESSIONAL ENGINEER — JAMES B. DE SILVA — No. M22816 — EXPIRES 09-30-18 — MECHANICAL — STATE OF CALIFORNIA

VENTURA COLLEGE

4667 TELEGRAPH ROAD, VENTURA, CALIFORNIA, 93003
VENTURA COUNTY COMMUNITY COLLEGE DISTRICT
MATH & SCIENCE COMPLEX

IDENTIFICATION STAMP
DIV. OF THE STATE ARCHITECT
OFFICE OF REGULATION SERVICES
APPL. 03- 117754
AC FLS SS
DATE JUL 05 2017

NO.	DATE	DESCRIPTION	BY
	12.19.16	DSA SUBMITTAL	

REVISIONS

DRAWN BY:	S.L.
CHECKED BY:	A.D.S.
DATE	05.12.17
JOB NO:	45461

SHEET TITLE

MECHANICAL ENLARGED PLANS

SHEET

M-1.3

DWG # 42 OF 82

05-12-17 DSA SUBMITTAL

Job No. 45461; FILE: N:\45461-Ventura\Arch\M1-3.dwg, Plot: X-2018.pmp, X-CAD.ctb, X-11D.dwg, Stand.dwg
Plot Date: 05-11-17; 10:42am; Plot scale: 1=1.00'; By: S.L. Prev. plot: 05-11-17; 10:16am

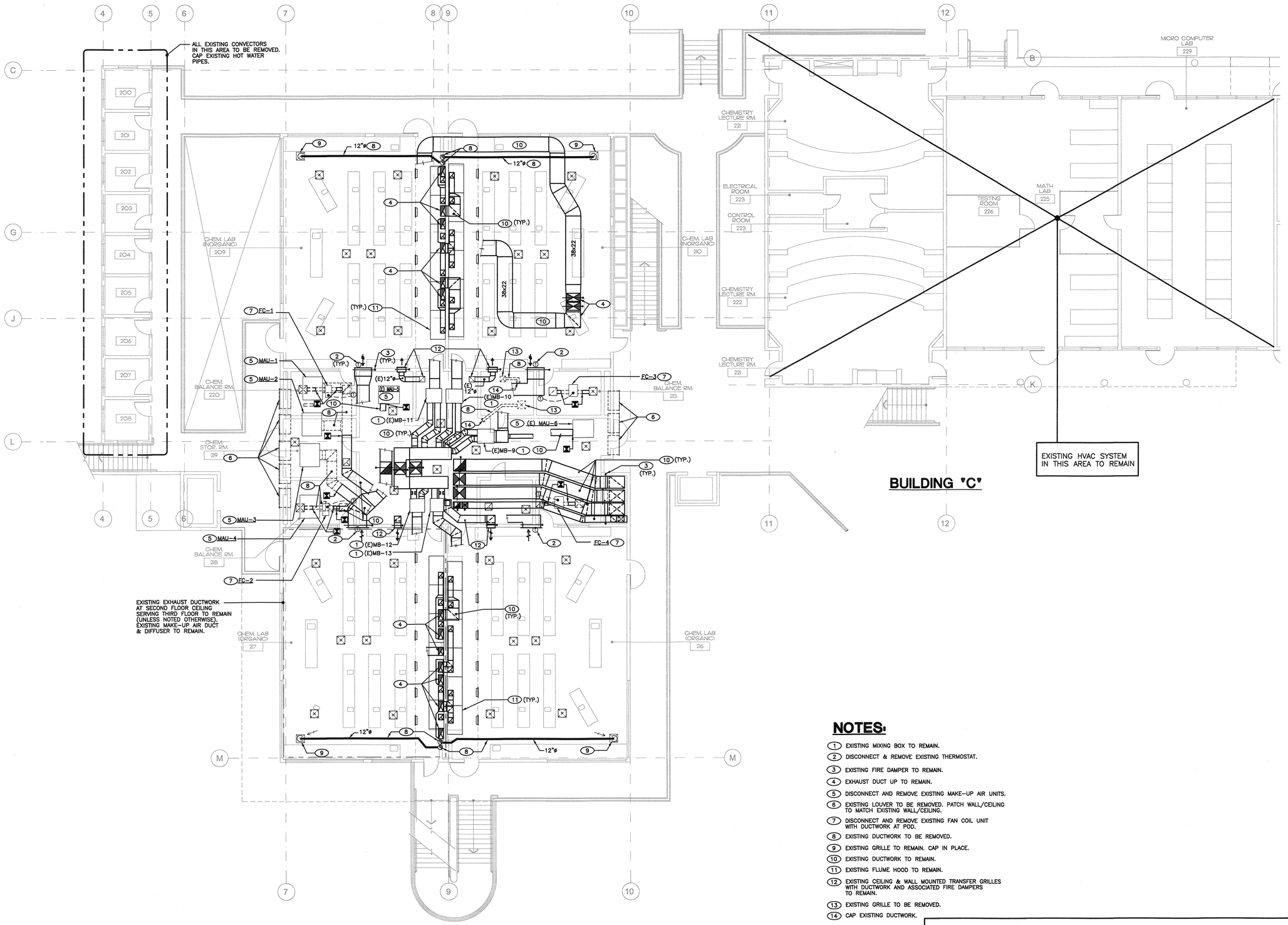

BUILDING "C"

BUILDING "B"

1 PARTIAL SECOND FLOOR DEMOLITION PLAN

SCALE: 1/8"=1'-0"

NOTES:

1. EXISTING MIXING BOX TO REMAIN.
2. DISCONNECT & REMOVE EXISTING THERMOSTAT.
3. EXISTING FIRE DAMPER TO REMAIN.
4. EXHAUST DUCT UP TO REMAIN.
5. DISCONNECT AND REMOVE EXISTING MAKE-UP AIR UNITS.
6. EXISTING LOUVER TO BE REMOVED. PATCH WALL/CEILING TO MATCH EXISTING WALL/CEILING.
7. DISCONNECT AND REMOVE EXISTING FAN COIL UNIT WITH DUCTWORK AT POD.
8. EXISTING DUCTWORK TO BE REMOVED.
9. EXISTING GRILLE TO REMAIN. CAP IN PLACE.
10. EXISTING DUCTWORK TO REMAIN.
11. EXISTING FLUME HOOD TO REMAIN.
12. EXISTING CEILING & WALL MOUNTED TRANSFER GRILLES WITH DUCTWORK AND ASSOCIATED FIRE DAMPERS TO REMAIN.
13. EXISTING GRILLE TO BE REMOVED.
14. CAP EXISTING DUCTWORK.

Ventura College Campus Map

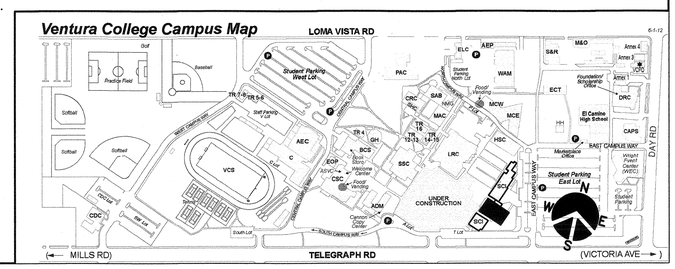

J & S CONSULTING ENGINEERS, INC.
ELECTRICAL ▫ MECHANICAL
FIRE PROTECTION
3111 Winona Ave., #102
Burbank, Ca 91504
Tel.: (818) 841-0303
Fax: (818) 841-8531
470 Helga Ct. Unit A
Newbury Park, Ca. 91320
Tel. (818) 398-5793
Fax: (818) 841-8531
www.jandsconsulting.com
E-Mail: jsmail@jandsconsulting.com
PROJECT No. 45461

LICENSED ARCHITECT KELLY ANN ANDERSON C-22205 APRIL 30, 2019 RENEWAL DATE STATE OF CALIFORNIA

REGISTERED PROFESSIONAL ENGINEER ABNEL B. DE SILVA No. M22816 DBRES 09-30-18 MECHANICAL STATE OF CALIFORNIA

VENTURA COLLEGE

4667 TELEGRAPH ROAD, VENTURA, CALIFORNIA, 93003
VENTURA COUNTY COMMUNITY COLLEGE DISTRICT

MATH & SCIENCE COMPLEX

IDENTIFICATION STAMP
DIV. OF THE STATE ARCHITECT
OFFICE OF REGULATION SERVICES
APPL. 03– 117754
AC FLS SS
DATE JUL 05 2017

NO.	DATE	DESCRIPTION	BY
	12.19.16	DSA SUBMITTAL	

REVISIONS

DRAWN BY:	S.L.
CHECKED BY:	A.D.S.
DATE	05.12.17
JOB NO:	45461

SHEET TITLE

MECHANICAL SECOND FLOOR DEMOLITION PLAN

SHEET

M-2.1

DWG # 44 OF 92

Job No. 45461 FILE: S:\45461\Ventura\DWG\1-Utility_M-2.1_Ref_Flms_X-Ref's.dwg, X-REF4.dwg, Shared.dwg
Plot Date: 05-11-17; 03:53pm; Plot scale: 1=1 ; By: S.L. Prev. plot: 05-11-17; 02:23pm
05-12-17 DSA SUBMITTAL

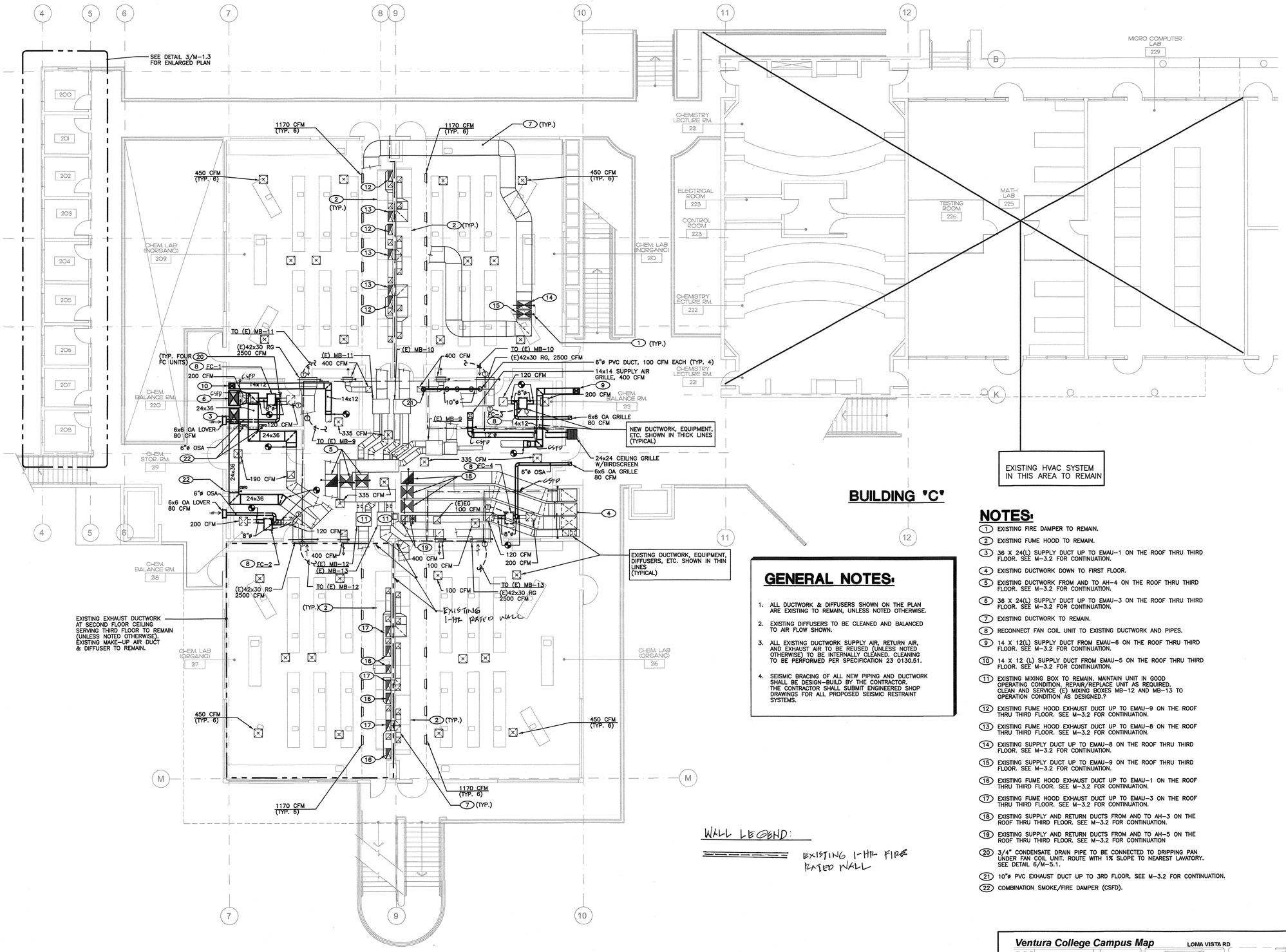

GENERAL NOTES:

1. ALL DUCTWORK & DIFFUSERS SHOWN ON THE PLAN ARE EXISTING TO REMAIN, UNLESS NOTED OTHERWISE.
2. EXISTING DIFFUSERS TO BE CLEANED AND BALANCED TO AIR FLOW SHOWN.
3. ALL EXISTING DUCTWORK SUPPLY AIR, RETURN AIR, AND EXHAUST AIR TO BE REUSED (UNLESS NOTED OTHERWISE) TO BE INTERNALLY CLEANED. CLEANING TO BE PERFORMED PER SPECIFICATION 23 0130.51.
4. SEISMIC BRACING OF ALL NEW PIPING AND DUCTWORK SHALL BE DESIGN-BUILD BY THE CONTRACTOR. THE CONTRACTOR SHALL SUBMIT ENGINEERED SHOP DRAWINGS FOR ALL PROPOSED SEISMIC RESTRAINT SYSTEMS.

NOTES:

1. EXISTING FIRE DAMPER TO REMAIN.
2. EXISTING FUME HOOD TO REMAIN.
3. 36 X 24(L) SUPPLY DUCT UP TO EMAU-1 ON THE ROOF THRU THIRD FLOOR. SEE M-3.2 FOR CONTINUATION.
4. EXISTING DUCTWORK DOWN TO FIRST FLOOR.
5. EXISTING DUCTWORK FROM AND TO AH-4 ON THE ROOF THRU THIRD FLOOR. SEE M-3.2 FOR CONTINUATION.
6. 36 X 24(L) SUPPLY DUCT UP TO EMAU-3 ON THE ROOF THRU THIRD FLOOR. SEE M-3.2 FOR CONTINUATION.
7. EXISTING DUCTWORK TO REMAIN.
8. RECONNECT FAN COIL UNIT TO EXISTING DUCTWORK AND PIPES.
9. 14 X 12(L) SUPPLY DUCT FROM EMAU-6 ON THE ROOF THRU THIRD FLOOR. SEE M-3.2 FOR CONTINUATION.
10. 14 X 12 (L) SUPPLY DUCT FROM EMAU-5 ON THE ROOF THRU THIRD FLOOR. SEE M-3.2 FOR CONTINUATION.
11. EXISTING MIXING BOX TO REMAIN. MAINTAIN UNIT IN GOOD OPERATING CONDITION. REPAIR/REPLACE UNIT AS REQUIRED. CLEAN AND SERVICE (E) MIXING BOXES MB-12 AND MB-13 TO OPERATION CONDITION AS DESIGNED.?
12. EXISTING FUME HOOD EXHAUST DUCT UP TO EMAU-9 ON THE ROOF THRU THIRD FLOOR. SEE M-3.2 FOR CONTINUATION.
13. EXISTING FUME HOOD EXHAUST DUCT UP TO EMAU-8 ON THE ROOF THRU THIRD FLOOR. SEE M-3.2 FOR CONTINUATION.
14. EXISTING SUPPLY DUCT UP TO EMAU-8 ON THE ROOF THRU THIRD FLOOR. SEE M-3.2 FOR CONTINUATION.
15. EXISTING SUPPLY DUCT UP TO EMAU-9 ON THE ROOF THRU THIRD FLOOR. SEE M-3.2 FOR CONTINUATION.
16. EXISTING FUME HOOD EXHAUST DUCT UP TO EMAU-1 ON THE ROOF THRU THIRD FLOOR. SEE M-3.2 FOR CONTINUATION.
17. EXISTING FUME HOOD EXHAUST DUCT UP TO EMAU-3 ON THE ROOF THRU THIRD FLOOR. SEE M-3.2 FOR CONTINUATION.
18. EXISTING SUPPLY AND RETURN DUCTS FROM AND TO AH-3 ON THE ROOF THRU THIRD FLOOR. SEE M-3.2 FOR CONTINUATION.
19. EXISTING SUPPLY AND RETURN DUCTS FROM AND TO AH-5 ON THE ROOF THRU THIRD FLOOR. SEE M-3.2 FOR CONTINUATION
20. 3/4" CONDENSATE DRAIN PIPE TO BE CONNECTED TO DRIPPING PAN UNDER FAN COIL UNIT. ROUTE WITH 1% SLOPE TO NEAREST LAVATORY. SEE DETAIL 6/M-5.1.
21. 10"ø PVC EXHAUST DUCT UP TO 3RD FLOOR, SEE M-3.2 FOR CONTINUATION.
22. COMBINATION SMOKE/FIRE DAMPER (CSFD).

WALL LEGEND:

EXISTING 1-HR FIRE RATED WALL

1 PARTIAL SECOND FLOOR PLAN

SCALE: 1/8"=1'-0"

GRAPHIC SCALE: 1/8" = 1'- 0"

0 5 10 15 30

Ventura College Campus Map

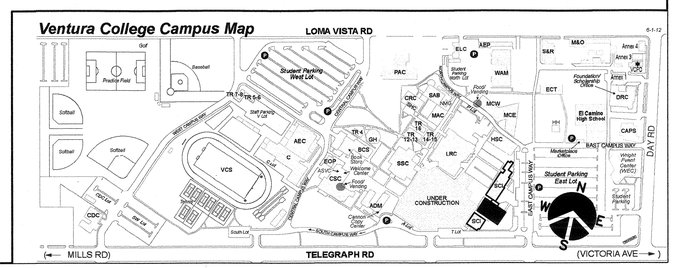

J & S CONSULTING ENGINEERS, INC.
ELECTRICAL • MECHANICAL
FIRE PROTECTION
3111 Winona Ave., #102
Burbank, Ca 91504
Tel.: (818) 841-0303
Fax: (818) 841-8531
470 Helga Ct. Unit A
Newbury Park, Ca. 91320
Tel. (818) 398-5793
Fax: (818) 841-8531
www.jandsconsulting.com
E-Mail: jsmail@jandsconsulting.com
PROJECT No. 45461

LICENSED ARCHITECT — JOHN ANN ANDERSON — C-22205 — APRIL 30, 2019 RENEWAL DATE — STATE OF CALIFORNIA

REGISTERED PROFESSIONAL ENGINEER — ABNEL B. DE SILVA — No. M22816 — EXPIRES 09-30-18 — MECHANICAL — STATE OF CALIFORNIA

VENTURA COLLEGE

4667 TELEGRAPH ROAD, VENTURA, CALIFORNIA, 93003
VENTURA COUNTY COMMUNITY COLLEGE DISTRICT

MATH & SCIENCE COMPLEX

IDENTIFICATION STAMP
DIV. OF THE STATE ARCHITECT
OFFICE OF REGULATION SERVICES
APPL. 03- 117754
AC FLS SS
DATE NOV 0 5 2017

NO.	DATE	DESCRIPTION	BY
	12.19.16	DSA SUBMITTAL	

REVISIONS

DRAWN BY:	S.L.
CHECKED BY:	A.D.S.
DATE	05.12.17
JOB NO:	45461

SHEET TITLE

MECHANICAL SECOND FLOOR PLAN

SHEET

M-2.2

DWG # 45 OF 81

05-12-17 DSA SUBMITTAL

Job No. 45461; FILE: N:\45461-Ventura\DSA\M-2.2.dwg; Ref. Files: (EXISTING.dwg, M2-1.dwg, X-GRID.dwg, X-3RDFLR.dwg, Shared.dwg
Plot Date: 05-11-17; 01:09pm; Plot Scale: 1=1"; By: S.L.; Plot: DSA-11x17; 45Adam

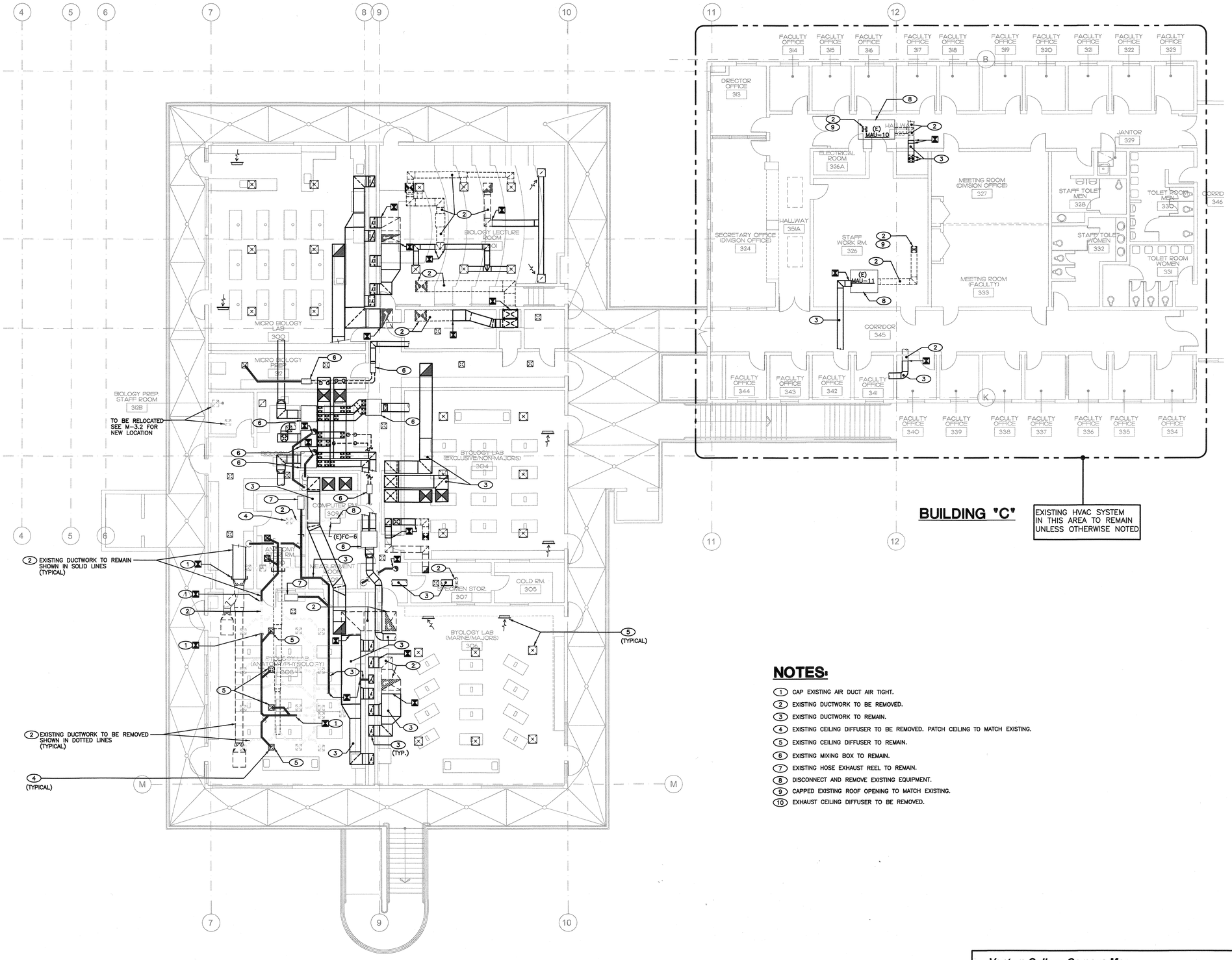

NOTES:

1. CAP EXISTING AIR DUCT AIR TIGHT.
2. EXISTING DUCTWORK TO BE REMOVED.
3. EXISTING DUCTWORK TO REMAIN.
4. EXISTING CEILING DIFFUSER TO BE REMOVED. PATCH CEILING TO MATCH EXISTING.
5. EXISTING CEILING DIFFUSER TO REMAIN.
6. EXISTING MIXING BOX TO REMAIN.
7. EXISTING HOSE EXHAUST REEL TO REMAIN.
8. DISCONNECT AND REMOVE EXISTING EQUIPMENT.
9. CAPPED EXISTING ROOF OPENING TO MATCH EXISTING.
10. EXHAUST CEILING DIFFUSER TO BE REMOVED.

1 THIRD FLOOR DEMOLITION PLAN

SCALE: 1/8"=1'-0"

GRAPHIC SCALE: 1/8" = 1'- 0"

0 5 10 15 30

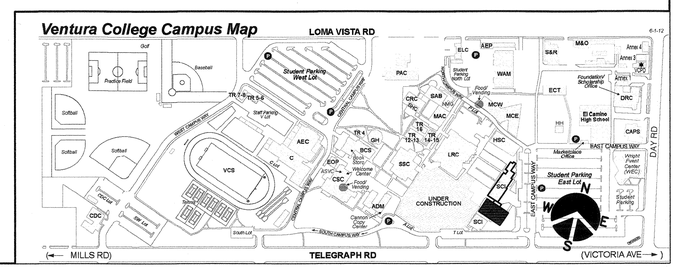

J & S CONSULTING ENGINEERS, INC.
ELECTRICAL ▫ MECHANICAL
FIRE PROTECTION
3111 Winona Ave., #102
Burbank, Ca 91504
Tel.: (818) 841-0303
Fax: (818) 841-8531
470 Helga Ct. Unit A
Newbury Park, Ca. 91320
Tel. (818) 398-5793
Fax: (818) 841-8531
www.jandsconsulting.com
E-Mail: jsmail@jandsconsulting.com

PROJECT No. 45461

LICENSED ARCHITECT JEAN ANN SAMPSON C-22205 APRIL 30, 2019 RENEWAL DATE STATE OF CALIFORNIA

REGISTERED PROFESSIONAL ENGINEER ABNEL B. DE SILVA No. M22816 EXPIRES 09-30-16 MECHANICAL STATE OF CALIFORNIA

VENTURA COLLEGE

4667 TELEGRAPH ROAD, VENTURA, CALIFORNIA, 93003
VENTURA COUNTY COMMUNITY COLLEGE DISTRICT
MATH & SCIENCE COMPLEX

IDENTIFICATION STAMP
DIV. OF THE STATE ARCHITECT
OFFICE OF REGULATION SERVICES
APPL. 03- 117754
AC FLS SS
DATE JUL 05 2017

NO.	DATE	DESCRIPTION	BY
	12.19.16	DSA SUBMITTAL	

REVISIONS

DRAWN BY:	S.L.
CHECKED BY:	A.D.S.
DATE	05.12.17
JOB NO:	45461

SHEET TITLE

MECHANICAL THIRD FLOOR DEMOLITION PLAN

SHEET

M-3.1

DWG # 46 OF 82

Job No. 45461, FILE: N:\45461-Ventura\DSA\M3-1.dwg, Ref. Files: A-GRIDLINES_N\45461-Ventura\DSA\A-3P1.dwg, Sheet.dwg
Date Saved: 05-11-17, 10:53:26am, Plot scale: 1=1.0"@ 30" EL, Plotted: 05-11-17, 10:59:06am
05-12-17 DSA SUBMITTAL

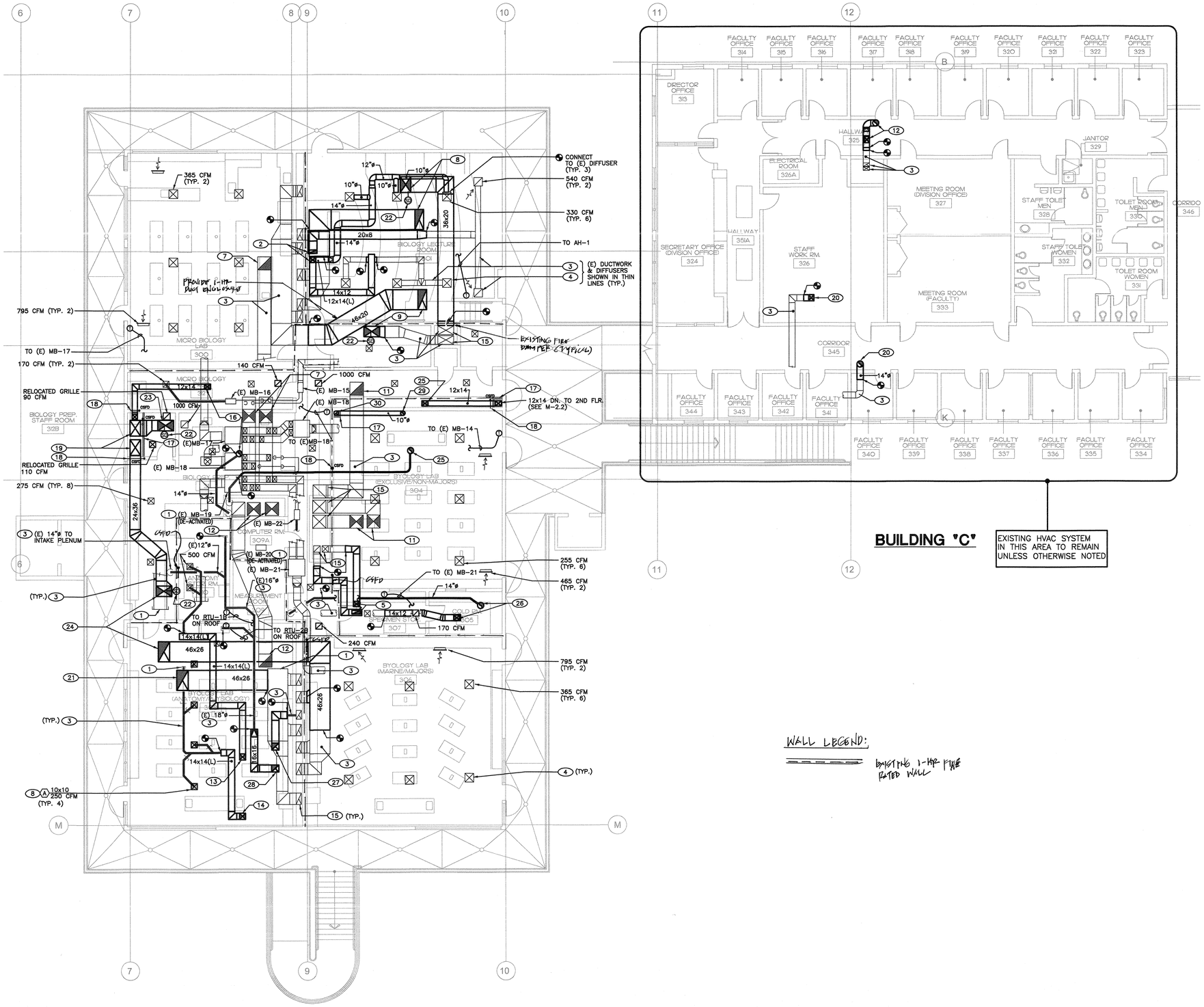

BUILDING "B"

BUILDING "C"

EXISTING HVAC SYSTEM IN THIS AREA TO REMAIN UNLESS OTHERWISE NOTED

WALL LEGEND:

EXISTING 1-HR FIRE RATED WALL

1 THIRD FLOOR PLAN

SCALE: 1/8"=1'-0"

GRAPHIC SCALE: 1/8" = 1'- 0"

0 5 10 15 30

GENERAL NOTES:

1. ALL DUCTWORK & DIFFUSERS SHOWN ON THE PLAN ARE EXISTING TO REMAIN, UNLESS NOTED OTHERWISE.
2. EXISTING DIFFUSERS TO BE CLEANED AND BALANCED TO AIR FLOW SHOWN.
3. ALL EXISTING DUCTWORK SUPPLY AIR, RETURN AIR, AND EXHAUST AIR TO BE REUSED (UNLESS NOTED OTHERWISE) TO BE INTERNALLY CLEANED, CLEANING TO BE PERFORMED PER SPECIFICATION 23 0130.51.
4. SEISMIC BRACING OF ALL NEW PIPING AND DUCTWORK SHALL BE DESIGN-BUILD BY THE CONTRACTOR. THE CONTRACTOR SHALL SUBMIT ENGINEERED SHOP DRAWINGS FOR ALL PROPOSED SEISMIC RESTRAINT SYSTEMS.

NOTES:

1. CAPPED EXISTING AIR DUCT.
2. 14x12(L) SUPPLY DUCT FROM AND 20x8(L) RETURN DUCT TO AH-1 ON ROOF. SEE M-4.2.
3. EXISTING DUCTWORK TO REMAIN.
4. EXISTING CEILING DIFFUSER TO REMAIN.
5. 14x12(L) SUPPLY DUCT FROM AND 20x8(L) RETURN DUCT TO AH-5 ON ROOF. SEE M-4.2 FOR CONTINUATION.
6. 1¼"ø HHWS & HHWR PIPES FROM ROOF, RECONNECT TO EXISTING 1¼"ø HOT WATER PIPES.
7. EXISTING SUPPLY AND RETURN DUCT TO BE CONNECTED TO TO AH-2 ON ROOF. SEE M-4.2 FOR CONTINUATION.
8. 36x24(L) SUPPLY DUCT FROM AND 46x20 EXHAUST DUCT TO EMAU-8 ON ROOF. SEE M-4.2 FOR CONTINUATION.
9. 36x24(L) SUPPLY DUCT FROM AND 46x20 EXHAUST DUCT TO EMAU-9 ON ROOF. SEE M-4.2 FOR CONTINUATION.
10. 14x12(L) SUPPLY DUCT FROM & 14"ø EXHAUST DUCT TO EMAU-10 ON ROOF, SEE M-4.3 FOR CONTINUATION.
11. EXISTING SUPPLY AND RETURN DUCT TO BE CONNECTED TO TO AH-3 ON ROOF. SEE M-4.2 FOR CONTINUATION.
12. EXISTING SUPPLY AND RETURN DUCT TO BE CONNECTED TO TO AH-4 ON ROOF. SEE M-4.2 FOR CONTINUATION.
13. 14x14(L) SUPPLY DUCT FROM RTU-1B ON ROOF. SEE M-4.2 FOR CONTINUATION.
14. 14x14(L) SUPPLY DUCT FROM RTU-2B ON ROOF. SEE M-4.2 FOR CONTINUATION.
15. EXISTING DUCTWORK DOWN TO 2ND FLOOR.
16. 14x12(L) SUPPLY DUCT FROM AND 14"ø EXHAUST DUCT TO EMAU-5 ON ROOF. SEE M-4.2 FOR CONTINUATION.
17. ONE (1) HR. DUCT SHAFT.
18. COMBINATION SMOKE/FIRE DAMPER (CSFD).
19. 36x24 SUPPLY DUCT DOWN TO 2ND FLOOR.
20. 14x12(L) SUPPLY DUCT FROM & 14"ø EXHAUST DUCT TO EMAU-11 ON ROOF, SEE M-4.3 FOR CONTINUATION.
21. 46x26 EXHAUST DUCT UP TO EMAU-1 ON ROOF. SEE M-4.2 FOR CONTINUATION.
22. INSTALL SMOKE DETECTOR INSIDE PLENUM W/ACCESS DOOR. PROVIDE REMOTE TEST/ANNUNCIATOR STATION.
23. 36x24(L) SUPPLY DUCT FROM EMAU-1 ON ROOF. SEE M-4.2 FOR CONTINUATION.
24. 36x24(L) SUPPLY DUCT FROM AND 46x26 EXHAUST DUCT UP TO EMAU-3 ON ROOF. SEE M-4.2 FOR CONTINUATION.
25. 14x12(L) SUPPLY DUCT FROM AND 14"ø EXHAUST DUCT UP TO EMAU-6 ON ROOF. SEE M-4.2 FOR CONTINUATION.
26. 14x12(L) SUPPLY DUCT FROM AND 14"ø EXHAUST DUCT UP TO EMAU-7 ON ROOF. SEE M-4.2 FOR CONTINUATION.
27. 16x16 EXHAUST DUCT UP THRU ROOF TO EF-25, INTERLOCK WITH RTU-2B.
28. 16x16 EXHAUST DUCT UP THRU ROOF TO EF-26, INTERLOCK WITH RTU-1B.
29. 10"ø PVC EXHAUST DUCT FROM ROOF, SEE M-4.2 FOR CONTINUATION.
30. 10"ø PVC EXHAUST DUCT FROM 2ND FLOOR, SEE M-2.2 FOR CONTINUATION. CUT THRU EXISTING CABINET HOUSING.

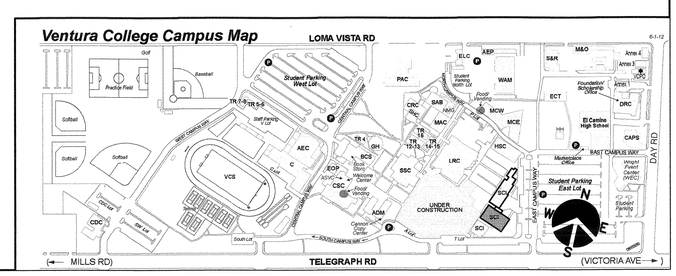

J & S CONSULTING ENGINEERS, INC.
ELECTRICAL ▫ MECHANICAL
FIRE PROTECTION
3111 Winona Ave., #102
Burbank, Ca 91504
Tel.: (818) 841-0303
Fax: (818) 841-8531
470 Helga Ct. Unit A
Newbury Park, Ca. 91320
Tel. (818) 398-5793
Fax: (818) 841-8531
www.jandsconsulting.com
E-Mail: jsmail@jandsconsulting.com

PROJECT No. 45461

LICENSED ARCHITECT KELLY ANN TAYLOR C-22205 APRIL 30, 2019 RENEWAL DATE STATE OF CALIFORNIA

REGISTERED PROFESSIONAL ENGINEER ABNEL B. DE SILVA No. M22816 EXPIRES 09-30-18 MECHANICAL STATE OF CALIFORNIA

VENTURA COLLEGE

4667 TELEGRAPH ROAD, VENTURA, CALIFORNIA, 93003
VENTURA COUNTY COMMUNITY COLLEGE DISTRICT

MATH & SCIENCE COMPLEX

IDENTIFICATION STAMP
DIV. OF THE STATE ARCHITECT
OFFICE OF REGULATION SERVICES
APPL. 03- 117754
AC. — FLS. — SS.
DATE JUL 05 2017

NO.	DATE	DESCRIPTION	BY
	12.19.16	DSA SUBMITTAL	

REVISIONS

DRAWN BY:	S.L.
CHECKED BY:	A.D.S.
DATE	05.12.17
JOB NO:	45461

SHEET TITLE

MECHANICAL THIRD FLOOR PLAN

SHEET

M-3.2

DWG # M OF 82

Job No. 45461 FILE: K:\45461-Ventura\DWG\M3-2.dwg, M-3.2 Ref. Files: GENNOTES.dwg, X-Grid.dwg, K:\45461-Ventura\Dwg\X-3FLR.dwg, M3-1.dwg, Sheet.dwg
Plot Date: 05-11-17, 9:53pm; Plot scale: 1=1'-0"; By: S.L. Prev. plot: 05-11-17, 02:12pm
05-12-17 DSA SUBMITTAL

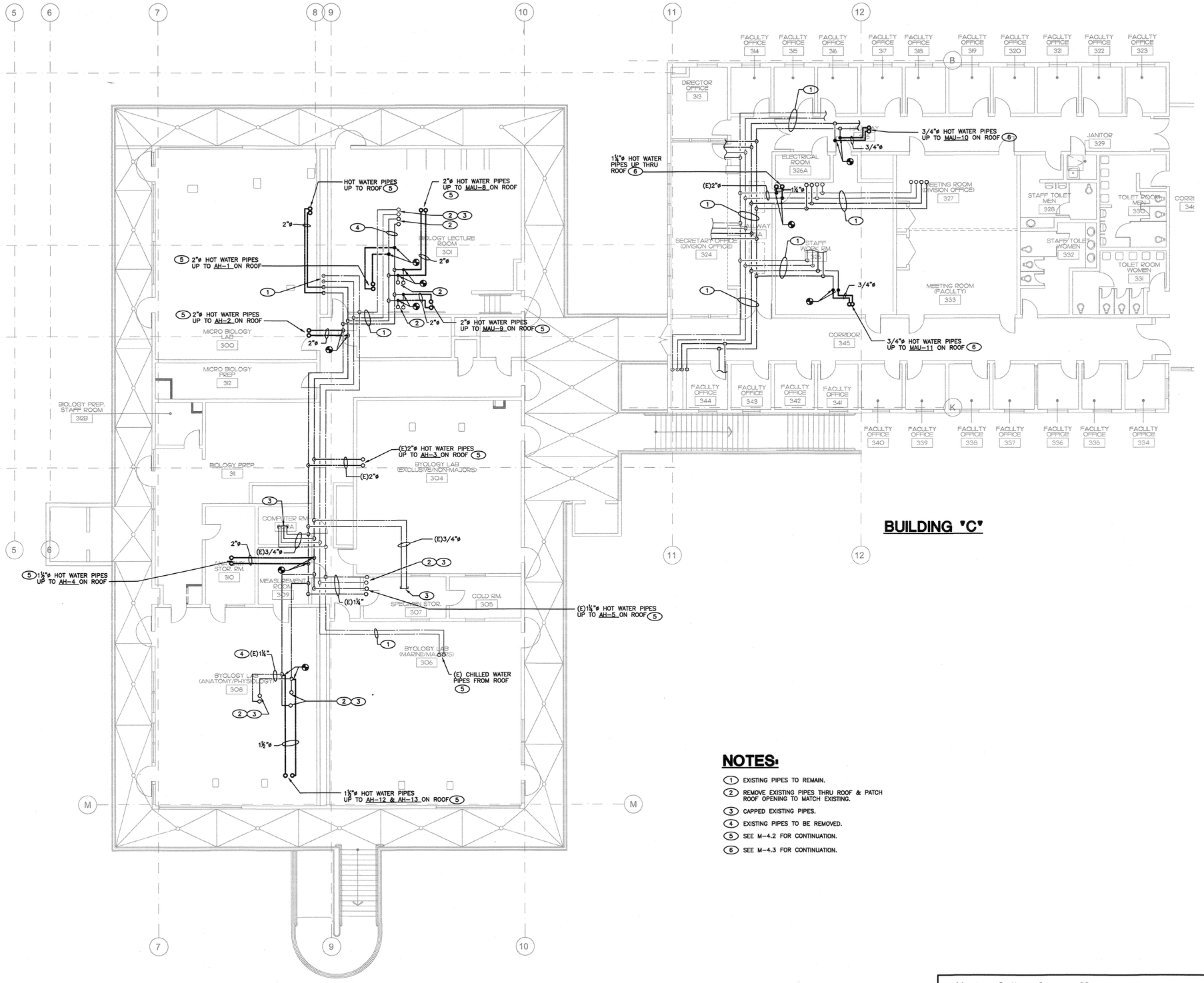

BUILDING "C"

BUILDING "B"

NOTES:

1. EXISTING PIPES TO REMAIN.
2. REMOVE EXISTING PIPES THRU ROOF & PATCH ROOF OPENING TO MATCH EXISTING.
3. CAPPED EXISTING PIPES.
4. EXISTING PIPES TO BE REMOVED.
5. SEE M-4.2 FOR CONTINUATION.
6. SEE M-4.3 FOR CONTINUATION.

1 THIRD FLOOR PLAN
SCALE: 1/8"=1'-0"

GRAPHIC SCALE: 1/8" = 1'- 0"
0 5 10 15 30

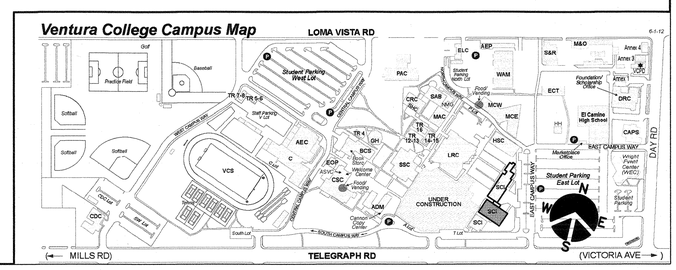

J & S CONSULTING ENGINEERS, INC.
ELECTRICAL ▫ MECHANICAL
FIRE PROTECTION
3111 Winona Ave., #102
Burbank, Ca 91504
Tel.: (818) 841-0303
Fax: (818) 841-8531
470 Helga Ct. Unit A
Newbury Park, Ca. 91320
Tel. (818) 398-5793
Fax: (818) 841-8531
www.jandsconsulting.com
E-Mail: jsmail@jandsconsulting.com

PROJECT No. 45461

LICENSED ARCHITECT JAY KNUTSEN C-22205 APRIL 30, 2019 RENEWAL DATE STATE OF CALIFORNIA

REGISTERED PROFESSIONAL ENGINEER ARMEL B. DE SILVA No. M22816 EXPIRES 09-30-18 MECHANICAL STATE OF CALIFORNIA

VENTURA COLLEGE

4667 TELEGRAPH ROAD, VENTURA, CALIFORNIA, 93003
VENTURA COUNTY COMMUNITY COLLEGE DISTRICT
MATH & SCIENCE COMPLEX

IDENTIFICATION STAMP
DIV. OF THE STATE ARCHITECT
OFFICE OF REGULATION SERVICES
APPL. 03- 117754
AC FLS SS
DATE JUL 05 2017

NO.	DATE	DESCRIPTION	BY
	12.19.16	DSA SUBMITTAL	

REVISIONS

DRAWN BY:	S.L.
CHECKED BY:	A.D.S.
DATE	05.12.17
JOB NO:	45461

SHEET TITLE

MECHANICAL THIRD FLOOR PIPING PLAN

SHEET

M-3.3

DWG # 48 OF 82

Job No. 45461 | Plot Date (D-M-Y) | 05/12/2017 - 8:00am | Plot scale: 1=1 | By: S.L. | Files: A-2014.dwg, S1.45461-VenturaCol.V-3.0R.dwg, Sheet.dwg
05-12-17 DSA SUBMITTAL

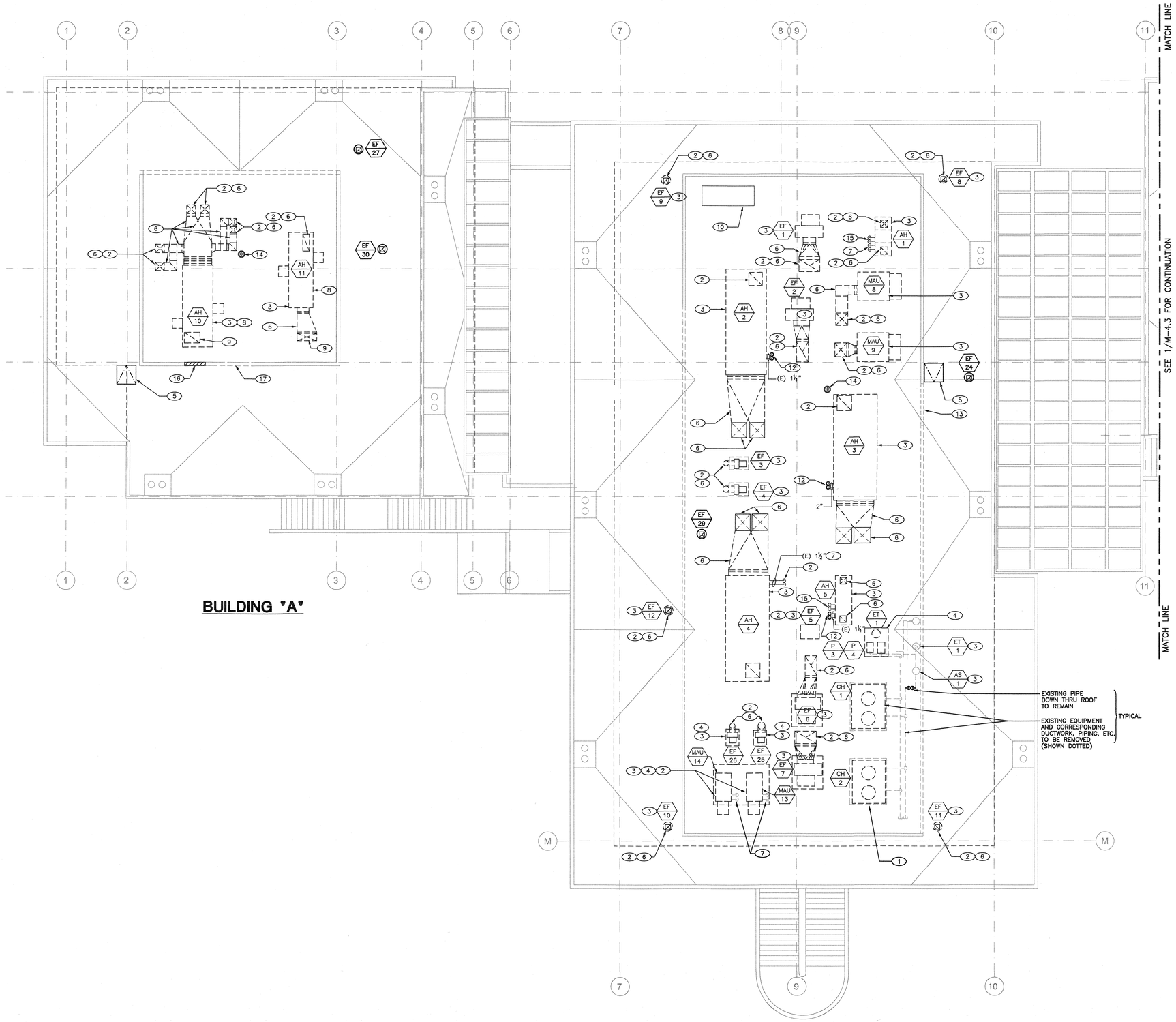

BUILDING "A"

BUILDING "B"

1 BUILDINGS "A" AND "B" ROOF DEMOLITION PLAN

SCALE: 1/8"=1'-0"

GRAPHIC SCALE: 1/8" = 1'-0"

0 5 10 15 30

DEMOLITION NOTES:

1. EXISTING CONCRETE PAD TO BE REMOVED.
2. PATCH ROOF OPENING TO MATCH EXISTING ROOF.
3. EXISTING EQUIPMENT TO BE REMOVED.
4. EXISTING CONCRETE PLATFORM AND CORRESPONDING UNIT SUPPORT TO BE REMOVED.
5. EXISTING ROOF HATCH.
6. EXISTING DUCTWORK TO BE REMOVED.
7. EXISTING PIPE THRU ROOF TO BE REMOVED AND CAPPED.
8. EXISTING STEEL EQUIPMENT SUPPORT FRAME TO BE REMOVED.
9. EXISTING DUCT TO BE REMOVED. RE-USE/WIDEN EXISTING ROOF OPENING.
10. EXISTING ELECTRICAL SWITCHBOARD "MCCA" TO REMAIN.
11. EXISTING DUCTWORK TO REMAIN.
12. DISCONNECT EXISTING HOT WATER PIPES TO EXISTING AIR HANDLER UNIT. EXISTING PIPES THRU ROOF TO REMAIN.
13. EXISTING ACCESS OPENING TO REMAIN.
14. EXISTING ROOF RECEPTOR TO REMAIN.
15. EXISTING COLD WATER PIPE THRU ROOF TO BE REMOVED AND CAPPED.
16. PATCH EXISTING WALL ACCESS OPENING TO MATCH EXISTING.
17. PROVIDE 8'-0" ACCESS OPENING TO SERVICE THE UNIT.

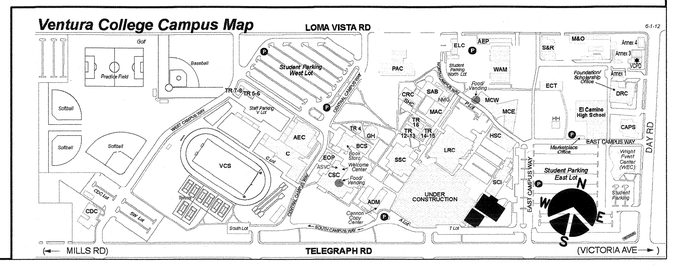

J & S CONSULTING ENGINEERS, INC.
ELECTRICAL • MECHANICAL
FIRE PROTECTION
3111 Winona Ave., #102
Burbank, Ca 91504
Tel.: (818) 841-0303
Fax: (818) 841-8531
470 Helga Ct. Unit A
Newbury Park, Ca. 91320
Tel. (818) 398-5793
Fax: (818) 841-8531
www.jandsconsulting.com
E-Mail: jsmail@jandsconsulting.com
PROJECT No. 45461

LICENSED ARCHITECT — JEAN-MARC SAINT-AMOUR — C-22205 — APRIL 30, 2019 RENEWAL DATE — STATE OF CALIFORNIA

REGISTERED PROFESSIONAL ENGINEER — ABNEL B. DE SILVA — No. M22816 — EXPIRES 09-30-15 — MECHANICAL — STATE OF CALIFORNIA

VENTURA COLLEGE

4667 TELEGRAPH ROAD, VENTURA, CALIFORNIA, 93003
VENTURA COUNTY COMMUNITY COLLEGE DISTRICT

MATH & SCIENCE COMPLEX

IDENTIFICATION STAMP
DIV. OF THE STATE ARCHITECT
OFFICE OF REGULATION SERVICES
APPL. 03- 117754
AC — FLS — SS
DATE JUL 05 2017

NO.	DATE	DESCRIPTION	BY
	12.19.16	DSA SUBMITTAL	

REVISIONS

DRAWN BY:	S.L.
CHECKED BY:	A.D.S.
DATE	05.12.17
JOB NO:	45461

SHEET TITLE

BUILDINGS "A" AND "B" MECHANICAL ROOF DEMOLITION PLAN

SHEET

M-4.1

DWG # 49 OF 82

05-12-17 DSA SUBMITTAL

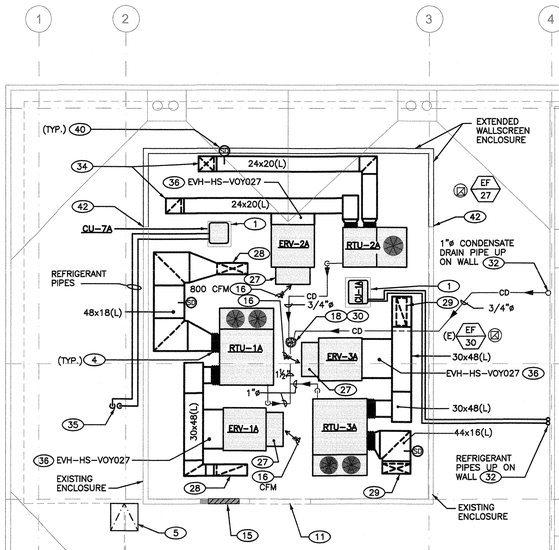

BUILDING "A"

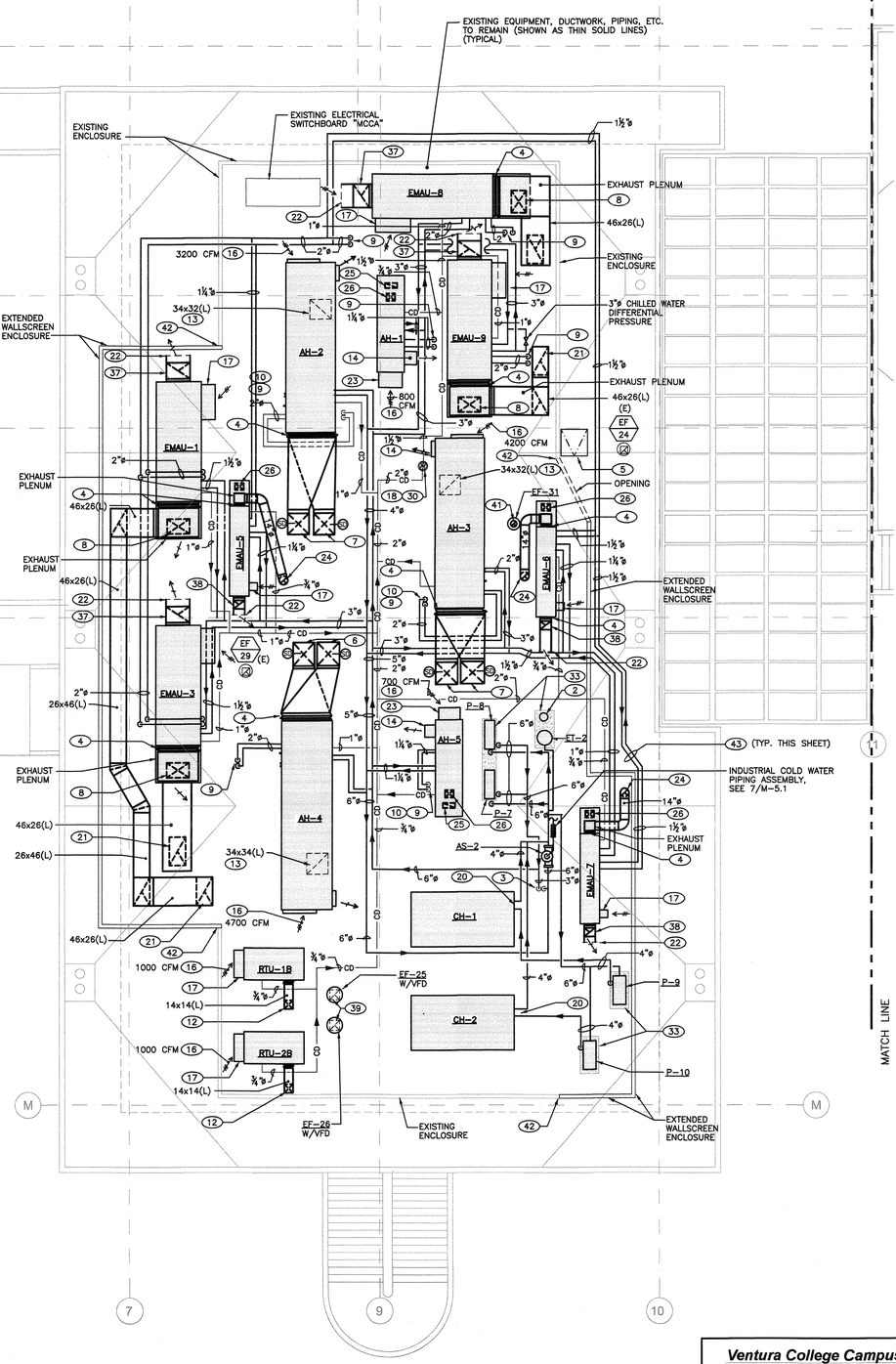

SEE M-4.3 FOR CONTINUATION

BUILDING "B"

1 PARTIAL ROOF PLAN

SCALE: 1/8"=1'-0"

GRAPHIC SCALE: 1/8" = 1'- 0"

0 5 10 15 30

GENERAL NOTES:

1. ALL DUCTWORK & DIFFUSERS SHOWN ON THE PLAN ARE EXISTING TO REMAIN, UNLESS NOTED OTHERWISE.
2. EXISTING DIFFUSERS TO BE CLEANED AND BALANCED TO AIR FLOW SHOWN.
3. ALL EXISTING DUCTWORK SUPPLY AIR, RETURN AIR, AND EXHAUST AIR TO BE REUSED (UNLESS NOTED OTHERWISE) TO BE INTERNALLY CLEANED. CLEANING TO BE PERFORMED PER SPECIFICATION 23 0130.51.
4. SEISMIC BRACING OF ALL NEW PIPING AND DUCTWORK SHALL BE DESIGN-BUILD BY THE CONTRACTOR. THE CONTRACTOR SHALL SUBMIT ENGINEERED SHOP DRAWINGS FOR ALL PROPOSED SEISMIC RESTRAINT SYSTEMS.

NOTES:

1. PROVIDE PLATFORM.
2. CHEMICAL BYPASS FEEDER, SEE DETAIL 2/M-5.1.
3. 3"ø CHWS & CHWR PIPES DOWN & RECONNECT TO EXISTING PIPES.
4. FLEXIBLE CONNECTION.
5. EXISTING ROOF HATCH.
6. 34x34(L) SUPPLY DUCT DOWN SEE M-3.2 FOR CONTINUATION.
7. 34x32(L) SUPPLY DUCT DOWN SEE M-3.2 FOR CONTINUATION.
8. 36x24(L) SUPPLY DUCT DOWN SEE M-3.2 FOR CONTINUATION.
9. HOT WATER PIPES AND/OR CHILLED WATER PIPES DOWN THRU ROOF AND RECONNECT TO EXISTING PIPES.
10. EXISTING HOT WATER PIPING TO REMAIN.
11. PROVIDE 8'-0" ACCESS OPENING TO SERVICE THE UNIT.
12. 14x14(L) SUPPLY DUCT THRU ROOF, SEE M-3.2 FOR CONTINUATION.
13. RETURN DUCT THRU ROOF (SIZE AS SHOWN).
14. RELIEF HOOD.
15. PATCH EXISTING WALL ACCESS OPENING TO MATCH EXISTING.
16. OUTSIDE AIR, SET AS SHOWN.
17. OUTSIDE AIR HOOD.
18. EXISTING ROOF RECEPTOR.
19. SEE COIL PIPING DETAIL 11/M-5.1.
20. SEE CHILLER PIPING DETAIL 10/M-5.1.
21. 46x26(L) EXHAUST DUCT THRU ROOF, SEE M-3.2 FOR CONTINUATION.
22. BIRD SCREEN.
23. ECONOMIZER HOOD.
24. 14"ø EXHAUST DUCT FROM BELOW, SEE M-3.2 FOR CONTINUATION.
25. 20x8(L) RETURN DUCT DOWN, SEE M-3.2 FOR CONTINUATION.
26. 14x12(L) SUPPLY DUCT DOWN, SEE M-3.2 FOR CONTINUATION.
27. RELIEF HOOD ON TOP/ECONOMIZER HOOD BELOW.
28. 48x18(L) DUCT DOWN, SEE SHEET M-1.2 FOR CONTINUATION.
29. 44x16(L) DUCT DOWN, SEE SHEET M-1.2 FOR CONTINUATION.
30. CONDENSATE DRAIN PIPE, SPILL TO EXISTING ROOF RECEPTOR.
31. 18x16(L) DUCT UP.
32. SEE M-4.3 FOR CONTINUATION..
33. CONCRETE PAD.
34. 24x24(L) SUPPLY & RETURN DUCT, SEE SHEET M-1.2 FOR CONTINUATION.
35. REFRIGERANT PIPES DOWN THRU ROOF, SEE M-1.2 FOR CONTINUATION.
36. MICROMETAL KIT HORIZONTAL DISCHARGE PART # AS SHOWN ON PLAN.
37. BOTTOM OF 38x26 EXHAUST DUCT PLENUM UP TO 36" ABOVE AC UNIT. EXHAUST PLENUM STACK SUPPORTED ALONG SIDE OF AC UNIT.
38. BOTTOM OF 18x14 EXHAUST DUCT PLENUM UP TO 36" ABOVE AC UNIT. EXHAUST PLENUM STACK SUPPORTED ALONG SIDE AC UNIT.
39. 16x16 EXHAUST DUCT FROM BELOW, SEE SHEET M-3.2 FOR CONTINUATION.
40. INSTALL SMOKE DETECTOR INSIDE PLENUM W/ACCESS DOOR. PROVIDE REMOTE TEST/ANNUNCIATOR STATION.
41. 10"ø PVC EXHAUST DUCT FROM THIRD FLOOR. SEE M-3.2 FOR CONTINUATION.
42. POINT OF CONNECTION TO EXISTING.
43. REFER TO STRUCTURAL DETAIL 23/S-5.2 FOR TYPICAL PIPE SUPPORT DETAIL.

Ventura College Campus Map

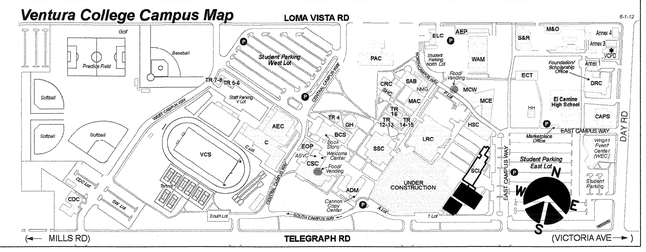

J & S CONSULTING ENGINEERS, INC.
ELECTRICAL • MECHANICAL
FIRE PROTECTION
3111 Winona Ave., #102
Burbank, Ca 91504
Tel.: (818) 841-0303
Fax: (818) 841-8531
470 Helga Ct. Unit A
Newbury Park, Ca. 91320
Tel. (818) 398-5793
Fax: (818) 841-8531
www.jandsconsulting.com
E-Mail: jsmail@jandsconsulting.com

PROJECT No. 45461

LICENSED ARCHITECT JAMES ANN ALLEN TAYLOR C-22205 APRIL 30, 2019 RENEWAL DATE STATE OF CALIFORNIA

REGISTERED PROFESSIONAL ENGINEER JAMES B. DE SILVA No. M22816 EXPIRES 09-30-18 MECHANICAL STATE OF CALIFORNIA

VENTURA COLLEGE

4667 TELEGRAPH ROAD, VENTURA, CALIFORNIA, 93003
VENTURA COUNTY COMMUNITY COLLEGE DISTRICT
MATH & SCIENCE COMPLEX

IDENTIFICATION STAMP
DIV. OF THE STATE ARCHITECT
OFFICE OF REGULATION SERVICES
APPL. 03- 117754
AC FLS SS
DATE JUL 05 2017

NO.	DATE	DESCRIPTION	BY
	12.19.16	DSA SUBMITTAL	

REVISIONS

DRAWN BY:	S.L.
CHECKED BY:	A.D.S.
DATE	05.12.17
JOB NO:	45461

SHEET TITLE

BUILDINGS "A" AND "B" MECHANICAL ROOF PLAN

SHEET

M-4.2

DWG # 50 OF 82

Job No. 45461 | File: I:\VL45461\Mechanical\M-1.2.dwg, M-1.2 Ref. Dwgs: N\VL45461\Mechanical\Xrefs\VPIT SADDLE.dwg GENNOTES.dwg MA-1.dwg, X-CAD.dwg, Shad.dwg, X-roof.dwg
Plot Date: 05-11-17; Plotted: Plot scale: 1=1.0PS By: S.L. Plot: 05-11-17; 10:18am
05-12-17 DSA SUBMITTAL

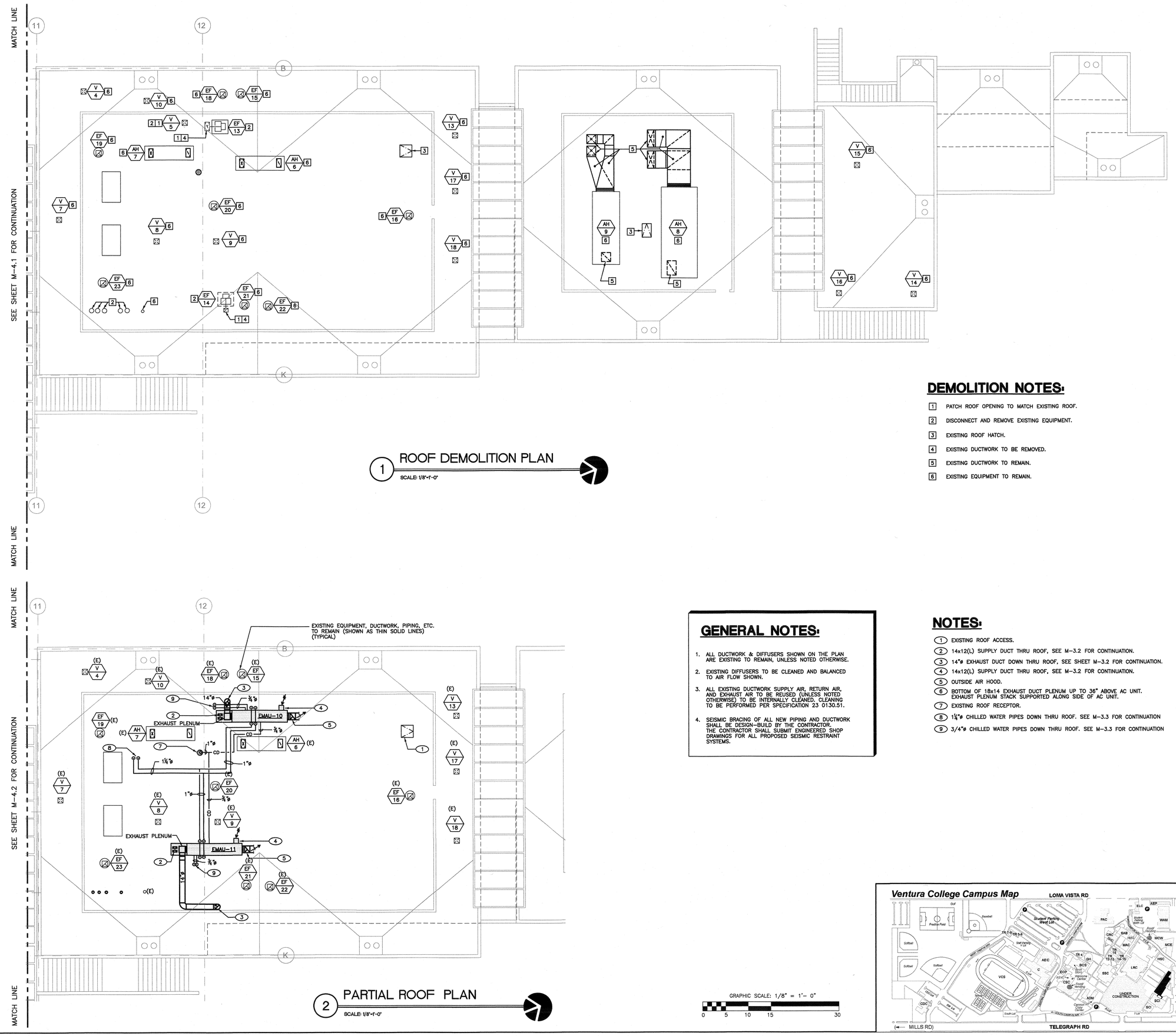

1 ROOF DEMOLITION PLAN

SCALE: 1/8"=1'-0"

DEMOLITION NOTES:

1. PATCH ROOF OPENING TO MATCH EXISTING ROOF.
2. DISCONNECT AND REMOVE EXISTING EQUIPMENT.
3. EXISTING ROOF HATCH.
4. EXISTING DUCTWORK TO BE REMOVED.
5. EXISTING DUCTWORK TO REMAIN.
6. EXISTING EQUIPMENT TO REMAIN.

2 PARTIAL ROOF PLAN

SCALE: 1/8"=1'-0"

GENERAL NOTES:

1. ALL DUCTWORK & DIFFUSERS SHOWN ON THE PLAN ARE EXISTING TO REMAIN, UNLESS NOTED OTHERWISE.
2. EXISTING DIFFUSERS TO BE CLEANED AND BALANCED TO AIR FLOW SHOWN.
3. ALL EXISTING DUCTWORK SUPPLY AIR, RETURN AIR, AND EXHAUST AIR TO BE REUSED (UNLESS NOTED OTHERWISE) TO BE INTERNALLY CLEANED, CLEANING TO BE PERFORMED PER SPECIFICATION 23 0130.51.
4. SEISMIC BRACING OF ALL NEW PIPING AND DUCTWORK SHALL BE DESIGN-BUILD BY THE CONTRACTOR. THE CONTRACTOR SHALL SUBMIT ENGINEERED SHOP DRAWINGS FOR ALL PROPOSED SEISMIC RESTRAINT SYSTEMS.

NOTES:

1. EXISTING ROOF ACCESS.
2. 14x12(L) SUPPLY DUCT THRU ROOF, SEE M-3.2 FOR CONTINUATION.
3. 14"ø EXHAUST DUCT DOWN THRU ROOF, SEE SHEET M-3.2 FOR CONTINUATION.
4. 14x12(L) SUPPLY DUCT THRU ROOF, SEE M-3.2 FOR CONTINUATION.
5. OUTSIDE AIR HOOD.
6. BOTTOM OF 18x14 EXHAUST DUCT PLENUM UP TO 36" ABOVE AC UNIT. EXHAUST PLENUM STACK SUPPORTED ALONG SIDE OF AC UNIT.
7. EXISTING ROOF RECEPTOR.
8. 1¼"ø CHILLED WATER PIPES DOWN THRU ROOF. SEE M-3.3 FOR CONTINUATION
9. 3/4"ø CHILLED WATER PIPES DOWN THRU ROOF. SEE M-3.3 FOR CONTINUATION

GRAPHIC SCALE: 1/8" = 1'- 0"
0 5 10 15 30

Ventura College Campus Map

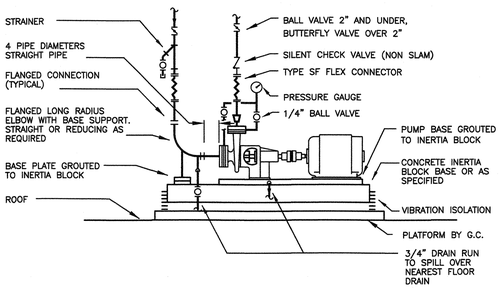

1 N.T.S. **BASE MOUNTED PUMP INSTALLATION DETAIL**

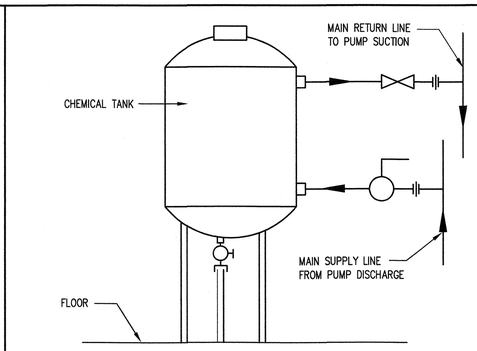

NOTES:
1. REFER TO STRUCTURAL DETAIL 25/S-5.2 FOR ANCHORING AND CALCULATIONS.

2 N.T.S. **CHEMICAL BY-PASS FEEDER PIPING DIAGRAM**

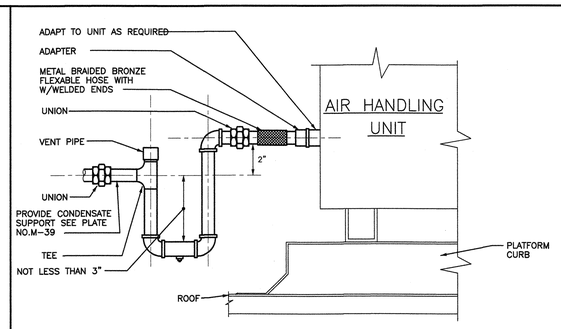

3 N.T.S. **CONDENSATE DRAIN TRAP DETAIL**

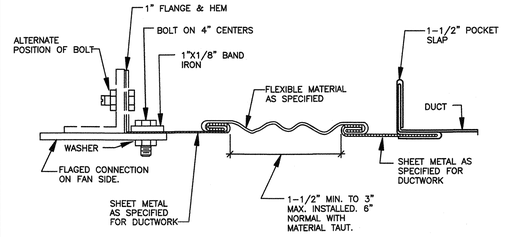

4 N.T.S. **RECTANGULAR FLEXIBLE CONNECTION**

5 N.T.S. **NOT USED**

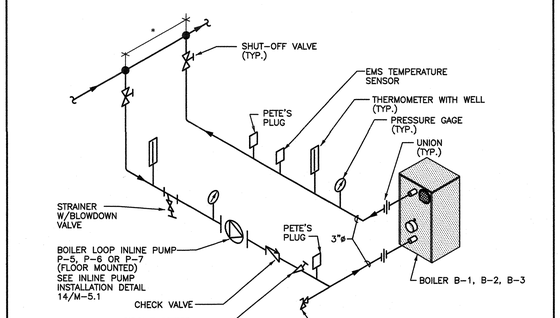

6 N.T.S. **CONDENSATE DRAIN CONNECTION TO TAILPIECE**

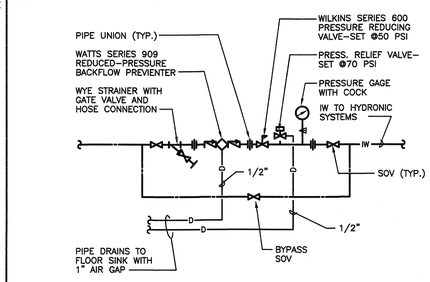

7 N.T.S. **INDUSTRIAL WATER MAKE-UP ASSEMBLY DETAIL**

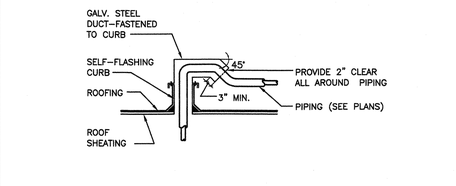

NOTE: PROVIDE SEALANT ALL AROUND PIPING.

8 N.T.S. **PIPE PENETRATION THRU ROOF**

System No. W-L-1297	WL 1297
F Ratings -- 1 and 2 Hr (See Item 1)	
T Rating -- 0 Hr	
L Rating at Ambient -- Less than 1 CFM/Sq Ft	
L Rating at 400° F -- Less than 1 CFM/Sq Ft	

Classified by Underwriters Laboratories, Inc. to UL 1479 and CAN/ULC-S115

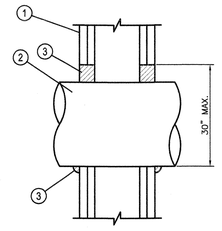

1. Wall Assembly – The 1 or 2 hr fire rated gypsum board/stud wall assembly shall be constructed of the materials and in the manner specified in the individual U300, U400 or V400 Series Wall and Partition Designs in the UL Fire Resistance Directory and shall include the following construction features.
A. Studs – Wall framing shall consist of either wood studs or steel channel studs. Wood studs to consist of nom 2 by 4 in. (51 by 102 mm) lumber spaced 16 in. (406 mm) OC. Steel studs to be min 2-1/2 in. (64 mm) wide and spaced max 24 in. (610 mm) OC.
B. Gypsum Board* – Nom 5/8 in. (16 mm) thick, 4 ft (1.22 m) wide with square or tapered edges. The gypsum board type, thickness, number of layers, fastener type and sheet orientation shall be as specified in the individual U300, U400 or V400 Series Design in the Fire Resistance Directory. Max diam of opening is 32 in. (813 mm).
The hourly F Rating of the firestop system is equal to the hourly fire rating of the wall assembly in which it is installed.
2. Through Penetrant – One metallic pipe, conduit or tubing installed concentrically or eccentrically within the firestop system. Pipe, conduit or tubing may be installed at an angle not greater than 45 degrees from perpendicular. Pipe, conduit or tube to be rigidly supported on both sides of wall assembly. The annular space between the pipe, conduit or tube and periphery of the opening shall be min 0 in (0 mm, point contact) to max 2 in. (51 mm) in 2 hr fire rated walls and min 0 in (0 mm, point contact) to max 1 in. (25 mm) in 1 hr fire rated walls. The following types and sizes of metallic pipes, conduit or tube may be used:
A. Steel Pipe – Nom 30 in. (762 mm) diam (or smaller) Schedule 40 (or heavier) steel pipe.
B. Iron Pipe – Nom 30 in. (762 mm) diam (or smaller) cast or ductile iron pipe.
C. Conduit – Nom 4 in. (102 mm) diam (or smaller) steel electrical metallic tubing (EMT) or 6 in. diam steel conduit.
D. Copper Tube – Nom 6 in. (152 mm) diam (or smaller) Type L (or heavier) copper tube.
E. Copper Pipe – Nom 6 in. (152 mm) diam (or smaller) Regular (or heavier) copper pipe.
3. Fill, Void or Cavity Material*-Sealant – Min 5/8 in. (16 mm) or 1-1/4 in. (32 mm) thickness of fill material applied within the annulus, flush with both surfaces of wall, for 1 hr and 2 hr fire rated wall assemblies, respectively. A min 1/2 in. (13 mm) diam bead of fill material shall be applied at the pipe/wall interface at the point contact location.
HILTI CONSTRUCTION CHEMICALS, DIV OF HILTI INC – CP606 Flexible Firestop Sealant
*Bearing the UL Classification Mark

CSFM listing # 4485-1200-108.

NOTES:
1. DO NOT CUT OR CORE THROUGH REINFORCING STEEL.
2. SEE 16/S1.1 FOR FRAMING ON OPENING WALL.

9 N.T.S. **PIPING FIRESTOP DETAIL**

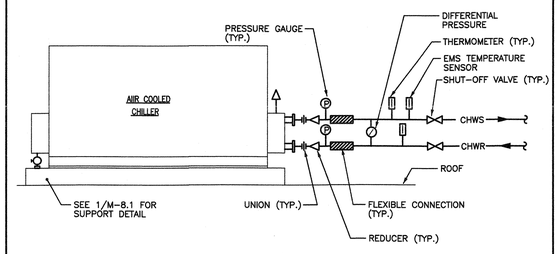

NOTE:
1. FLOW SWITCH IS BUILT-IN TO THE CHILLED WATER SUPPLY SIDE OF THE AIR COOLED CHILLER.

10 N.T.S. **AIR COOLED WATER CHILLER PIPING DIAGRAM**

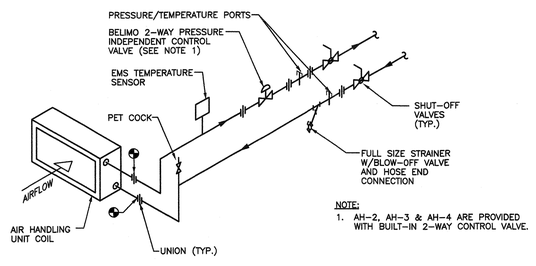

NOTE:
1. AH-2, AH-3 & AH-4 ARE PROVIDED WITH BUILT-IN 2-WAY CONTROL VALVE.

11 N.T.S. **HOT WATER COIL AND CHILLED WATER COIL DETAIL**

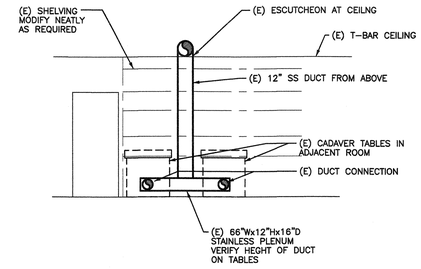

12 N.T.S. **EXISTING ELEVATION LOOKING NORTH FROM ROOM 311 TO ROOM 310**

NOTE:
INSTALL CIRCUIT SETTER WITH 5 PIPE DIAMETERS UPSTREAM AND 2 PIPE DIAMETERS DOWNSTREAM OF STRAIGHT UNDISTURBED PIPE.

* DISTANCE PER MANUFACTURER'S RECOMMENDATIONS.

13 N.T.S. **BOILER PIPING DIAGRAM**

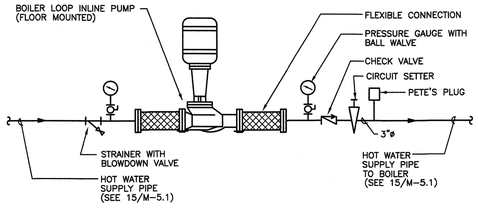

14 N.T.S. **IN-LINE PUMP INSTALLATION DETAIL**

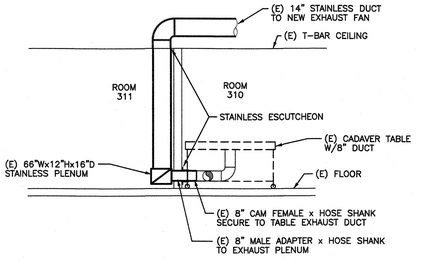

15 N.T.S. **CONNECTION DETAIL**

J & S CONSULTING ENGINEERS, INC.
ELECTRICAL - MECHANICAL
FIRE PROTECTION
3111 Winona Ave., #102
Burbank, Ca 91504
Tel.: (818) 841-0303
Fax: (818) 841-8531
470 Helga Ct. Unit A
Newbury Park, Ca. 91320
Tel. (818) 398-5793
Fax: (818) 841-8531
www.jandsconsulting.com
E-Mail: jsmail@jandsconsulting.com

PROJECT No. 45461

LICENSED ARCHITECT — C-22205 — APRIL 30, 2019 RENEWAL DATE — STATE OF CALIFORNIA

REGISTERED PROFESSIONAL ENGINEER — ANNE B. DE SILVA — No. M22816 — EXPIRES 09-30-18 — MECHANICAL — STATE OF CALIFORNIA

VENTURA COLLEGE

4667 TELEGRAPH ROAD, VENTURA, CALIFORNIA, 93003
VENTURA COUNTY COMMUNITY COLLEGE DISTRICT

MATH & SCIENCE COMPLEX

IDENTIFICATION STAMP
DIV. OF THE STATE ARCHITECT
OFFICE OF REGULATION SERVICES
APPL. 03- 117754
AC ✓ FLS ✓ SS
DATE JUL 05 2017

NO.	DATE	DESCRIPTION	BY
	12.19.16	DSA SUBMITTAL	
		REVISIONS	

DRAWN BY:	S.L.
CHECKED BY:	A.D.S.
DATE	05.12.17
JOB NO:	45461
SHEET TITLE	MECHANICAL DETAILS
SHEET	M-5.1
DWG #	52 OF 82

05-12-17 DSA SUBMITTAL

Job No. 45461; File: R:\45461-Ventura\CAD\Dwg Layout1, Ref. Files: SHEET.dwg
Plot Date: 05-11-17, 10:46am; Plot scale: 1=1.0"; By: S.L. Prev. plot: 05-11-17, 10:10am

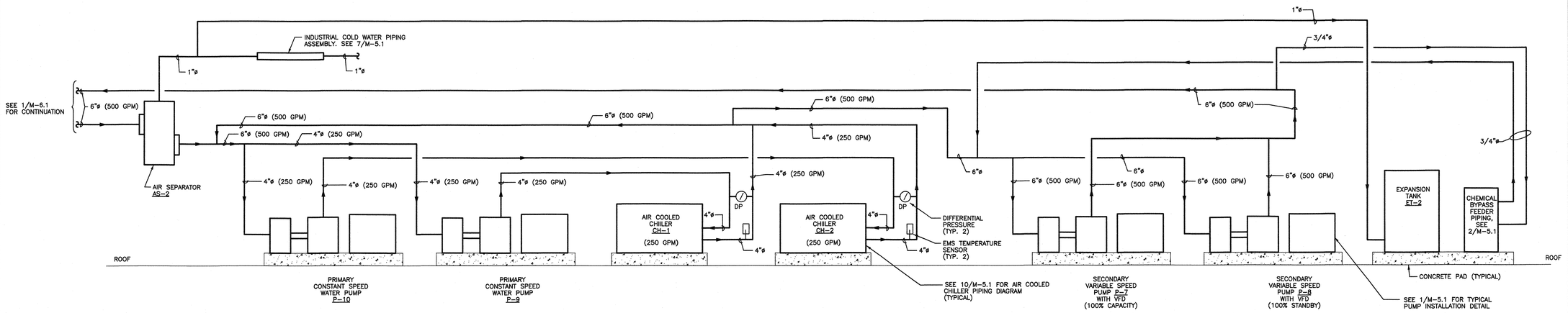

2 N.T.S. **CHILLED WATER REVERSE RETURN WITH VARIABLE SPEED PIPING SCHEMATIC**

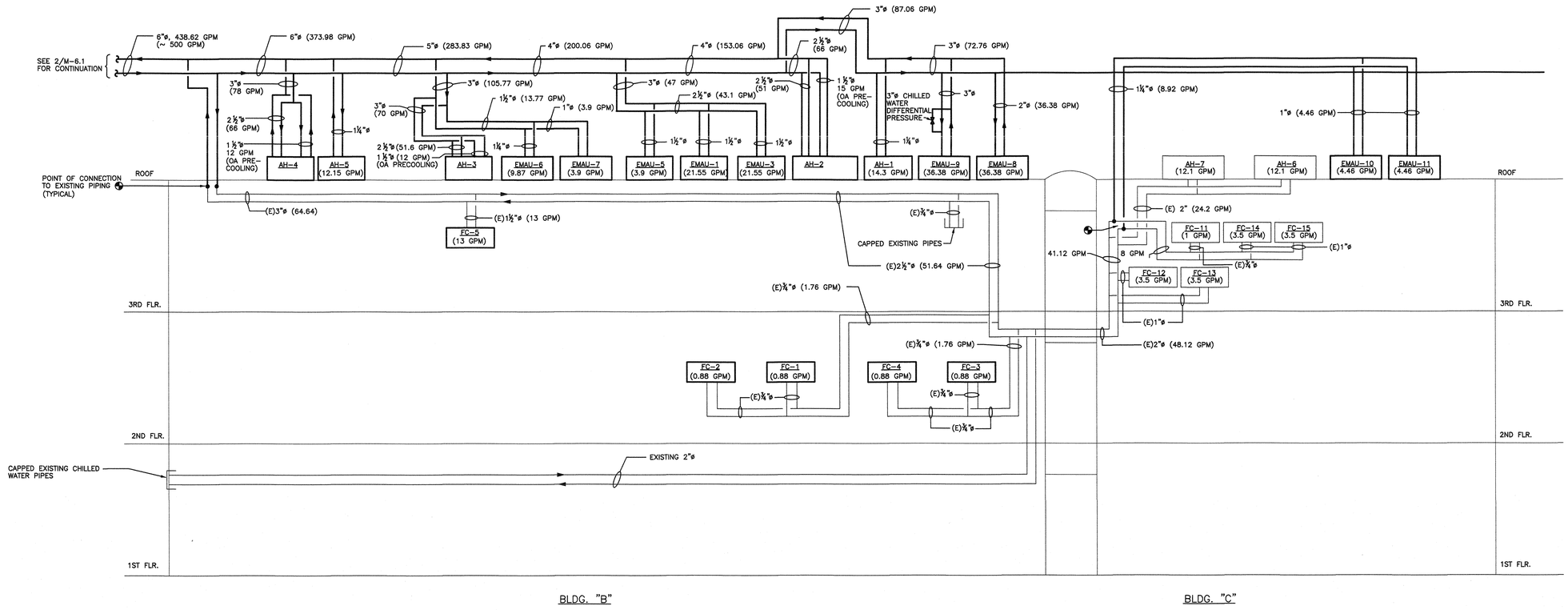

NOTES:

1. EQUIPMENT AND PIPING SHOWN IN LIGHT LINES IS EXISTING.
2. EQUIPMENT AND PIPING SHOWN IN HEAVY LINES IS NEW.

1 N.T.S. **BUILDINGS "B" & "C" CHILLED WATER PIPING DIAGRAM**

J & S CONSULTING ENGINEERS, INC.
ELECTRICAL ▫ MECHANICAL
FIRE PROTECTION
3111 Winona Ave., #102
Burbank, Ca 91504
Tel.: (818) 841-0303
Fax: (818) 841-8531
470 Helga Ct. Unit A
Newbury Park, Ca. 91320
Tel. (818) 398-5793
Fax: (818) 841-8531
www.jandsconsulting.com
E-Mail: jsmail@jandsconsulting.com
PROJECT No. 45461

LICENSED ARCHITECT DANIEL A. DOMINGUEZ C-22205 APRIL 30, 2019 RENEWAL DATE STATE OF CALIFORNIA

REGISTERED PROFESSIONAL ENGINEER JAMES B. DE SILVA No. M22816 EXPIRES 09-30-18 MECHANICAL STATE OF CALIFORNIA

VENTURA COLLEGE

4667 TELEGRAPH ROAD, VENTURA, CALIFORNIA, 93003
VENTURA COUNTY COMMUNITY COLLEGE DISTRICT
MATH & SCIENCE COMPLEX

IDENTIFICATION STAMP
DIV. OF THE STATE ARCHITECT
OFFICE OF REGULATION SERVICES
APPL. 03- 117754
AC FLS SS
DATE JUL 05 2017

NO.	DATE	DESCRIPTION	BY
	12.19.16	DSA SUBMITTAL	

REVISIONS

DRAWN BY:	S.L.
CHECKED BY:	A.D.S.
DATE	05.12.17
JOB NO:	45461

SHEET TITLE

CHILLED WATER PIPING DIAGRAMS

SHEET

M-6.1

DWG # 53 OF 82

05-12-17 DSA SUBMITTAL

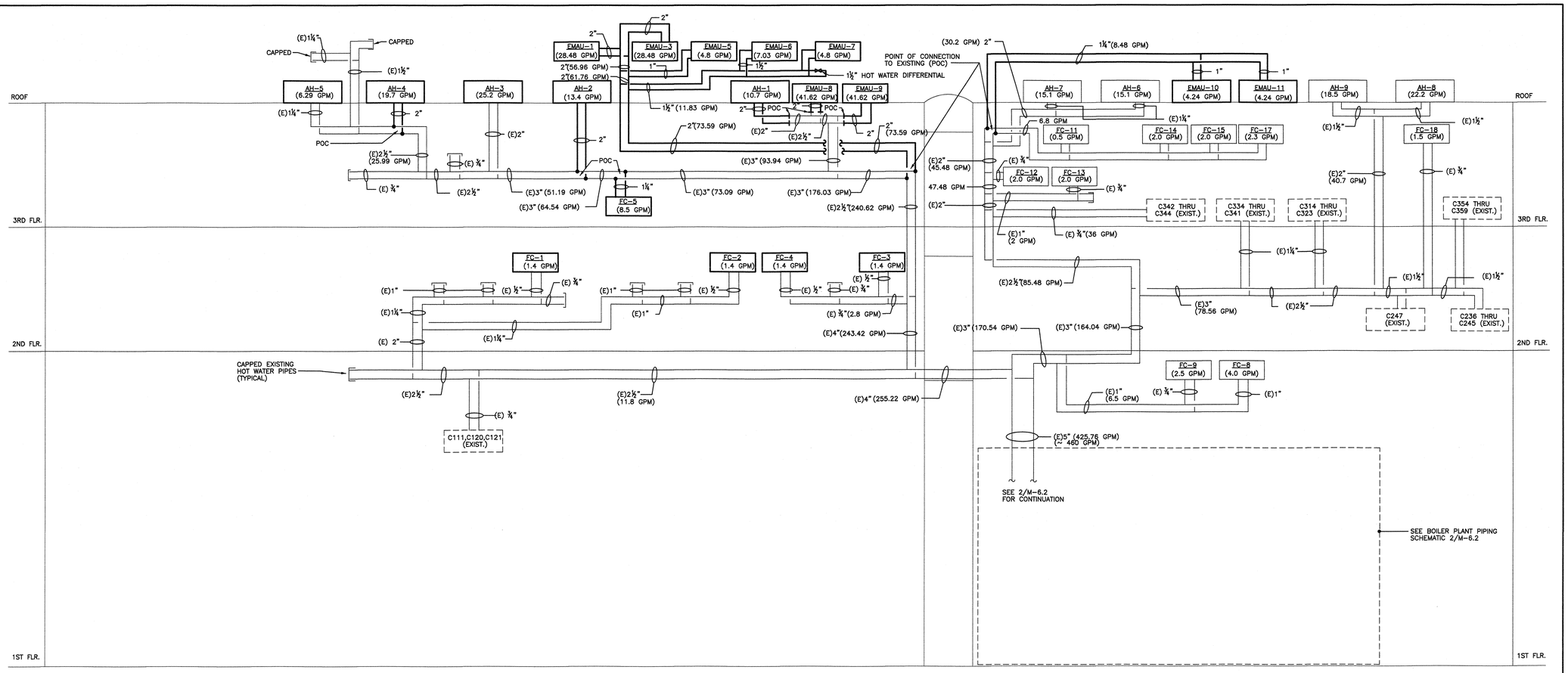

1 BUILDINGS "A," "B" & "C" HOT WATER PIPING DIAGRAM
N.T.S.

NOTES:

1. EQUIPMENT AND PIPING SHOWN IN LIGHT LINES IS EXISTING.
2. EQUIPMENT AND PIPING SHOWN IN HEAVY LINES IS NEW.

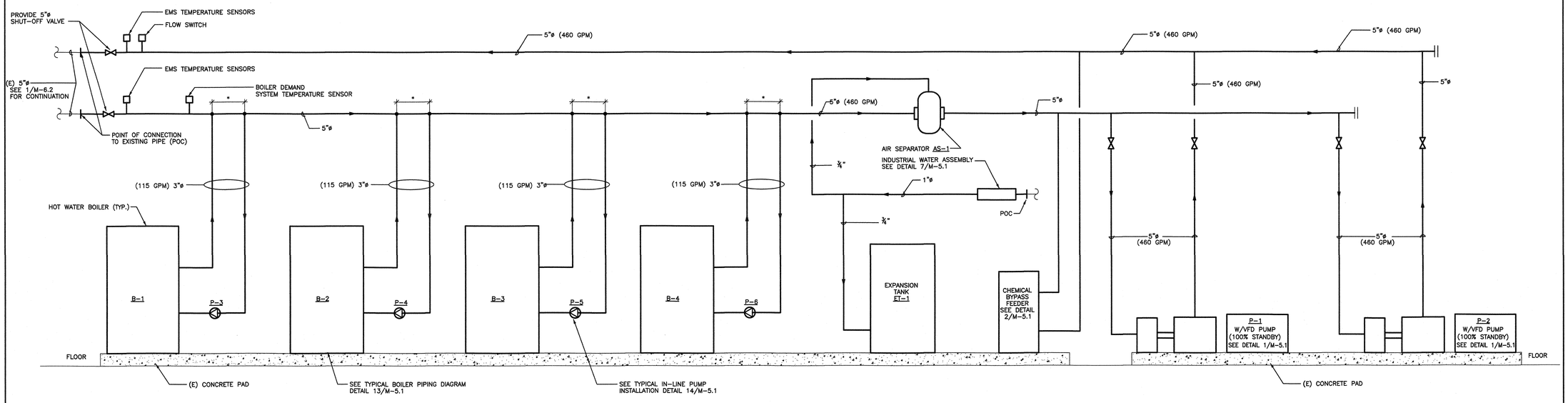

* MAXIMUM DISTANCE AS RECOMMENDED BY BOILER MANUFACTURER.

2 BOILER PLANT PIPING SCHEMATIC
N.T.S.

J & S CONSULTING ENGINEERS, INC.
ELECTRICAL • MECHANICAL
FIRE PROTECTION
3111 Winona Ave., #102
Burbank, Ca 91504
Tel.: (818) 841-0303
Fax: (818) 841-8531
470 Helga Ct. Unit A
Newbury Park, Ca. 91320
Tel. (818) 398-5793
Fax: (818) 841-8531
www.jandsconsulting.com
E-Mail: jsmail@jandsconsulting.com
PROJECT No. 45461

LICENSED ARCHITECT DANNY MAJOR C-22205 APRIL 30, 2019 RENEWAL DATE STATE OF CALIFORNIA

REGISTERED PROFESSIONAL ENGINEER JAMES B. DE SILVA No. M22816 EXPIRES 09-30-18 MECHANICAL STATE OF CALIFORNIA

VENTURA COLLEGE
4667 TELEGRAPH ROAD, VENTURA, CALIFORNIA, 93003
VENTURA COUNTY COMMUNITY COLLEGE DISTRICT
MATH & SCIENCE COMPLEX

IDENTIFICATION STAMP
DIV. OF THE STATE ARCHITECT
OFFICE OF REGULATION SERVICES
APPL. 03- 117754
AC. — FLS. — SS.
DATE JUL 05 2017

NO.	DATE	DESCRIPTION	BY
	12.19.16	DSA SUBMITTAL	

REVISIONS

DRAWN BY:	S.L.
CHECKED BY:	A.D.S.
DATE	05.12.17
JOB NO:	
SHEET TITLE	HOT WATER PIPING DIAGRAMS
SHEET	M-6.2
DWG #	81 OF 82

05-12-17 DSA SUBMITTAL

Job No. 45461-17C, N:\45461-VenturaCol\Mk-2-Dwg_Layout\...Plot Date: 05-11-17, 10:54:am, Plot scale: 1=1 By: S.L. Plot per: 05-11-17, 10:54am

Automated Logic Room Temperature Sensors

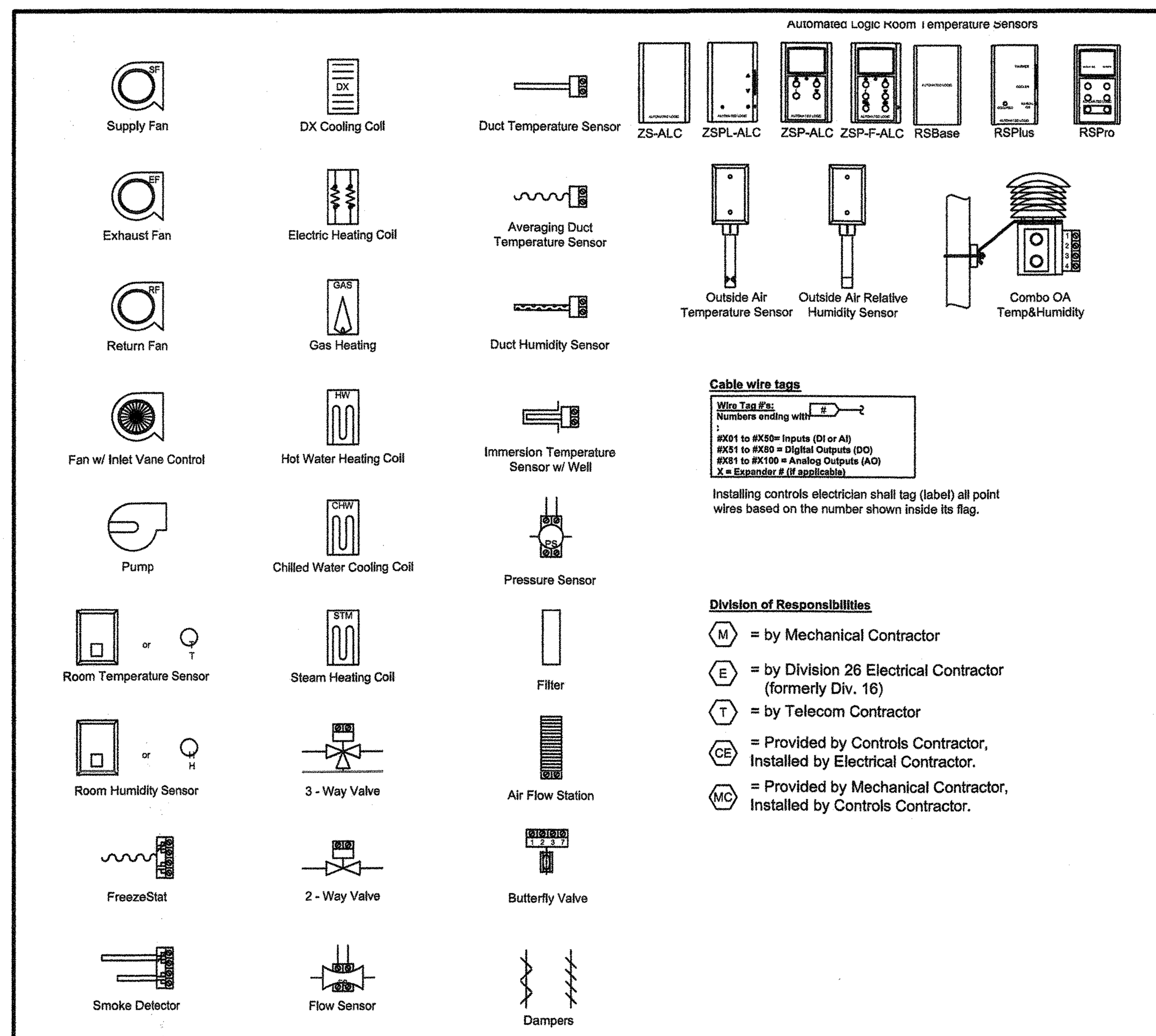

Cable wire tags

Wire Tag #'s:
Numbers ending with
#X01 to #X50 = Inputs (DI or AI)
#X51 to #X80 = Digital Outputs (DO)
#X81 to #X100 = Analog Outputs (AO)
X = Expander # (if applicable)

Installing controls electrician shall tag (label) all point wires based on the number shown inside its flag.

Division of Responsibilities

(M) = by Mechanical Contractor
(E) = by Division 26 Electrical Contractor (formerly Div. 16)
(T) = by Telecom Contractor
(CE) = Provided by Controls Contractor, Installed by Electrical Contractor.
(MC) = Provided by Mechanical Contractor, Installed by Controls Contractor.

SYMBOLS AND ABBREVIATIONS

ACC	Air Cooled Condenser	ELEC	Electrical	N/A	Not Applicable
AFMS	Air Flow Measuring Station	EWT	Entering Water Temperature	NC	Normally Closed
AHU	Air Handling Unit	EXH	Exhaust	NO	Normally Open
AI	Analog Input	F	Fahrenheit	OA	Outside Air
AO	Analog Output	FC	Fan Coil	OAD	Outside Air Damper
AUTO	Automatic	FD	Fire Damper	OAH	Outside Air Humidity
AUX	Auxiliary	FLR	Floor	OAT	Outside Air Temperature
BLR	Boiler	FLS	Fire / Life Safety	PENT	Penthouse
BAS	Building Automation System	FPM	Feet Per Minute	PRESS	Pressure
BLDG	Building	FRZ	Freezestat	PRV	Powered Roof Ventilator
BTUH	British Thermal Units/Hour	FSD	Fire/Smoke Damper	PSI	Pounds/Sq. In.
C	Common	FTR	Fin Tube Radiation	PSIG	Pounds/Sq. In. Gauge
CAD	Combustion Air Damper	GPM	Gallons Per Minute	RA	Return Air
CFM	Cubic Feet/Minute	GRV	Gravity Relief Vent	RAD	ReturnAir Damper
CHLR	Chiller	HC	Heating Coil	RAT	Return Air Temperature
CHWC	Chilled Water Coil	HE/HX	Heat Exchanger	REF	Refrigeration
CHWR	Chilled Water Return	HOA	Hand/Off/Auto	REG	Regulator
CHWS	Chilled Water Supply	HP	Heat Pump	RH	Relative Humidity
CHWP	Chilled Water Pump	HRU	Heat Recovery Unit	RAH	Return Air Humidity
CLG	Cooling	HTG	Heating	RTU	Roof Top Unit
COMP	Compressor	HTR	Heater	SA	Supply Air
COND	Condenser or Condensate	HUM	Humidifier	SCHED	Schedule
CONV	Convertor	HWP	Heating Water Pump	SD	Smoke Damper
CS	Current Switch	HWR	Hot Water Return	SF	Supply Fan
CUH	Cabinet Unit Heater	HWS	Hot Water Supply	SPC	Space Temperature
CWR	Condenser Water Return	KWH	Kilowatt/Hour	SSP	Space Static Pressure
CWS	Condenser Water Supply	LL	Low Limit	SHT	Sheet
D/N	Day/Night	LPS	Low Pressure Steam	STM	Steam
DAT	Discharge Air Temperature	LTG	Lighting	SUCT	Suction
DB	Dry Bulb	LWT	Leaving Water Temperature	SUP	Supply
DHW	Domestic Hot Water	MAT	Mixed Air Temperature	SYS	System
DI	Digital Input	MAX	Maximum	T-STAT	Thermostat
DMP	Damper	MBH	Thousands BTU's/Hour	TEMP	Temperature
DO	Digital Output	MCC	Motor Control Center	TYP	Typical
DPS	Diff. Pressure Switch	MECH	Mechanical	UH	Unit Heater
DPT	Diff. Pressure Transmitter	MEZZ	Mezzanine	UV	Unit Ventilator
DSP	Duct Static Pressure	MIN	Minimum	VAV	Variable Air Volume
DX	Direct Expansion Cooling	MISC	Miscellaneous	VFD	Variable Freq. Drive
EA	Exhaust Air	MS	Motor Starter	VVT	Variable Volume Terminal
EAD	Exhaust Air Damper	MTR	Motor	WSHP	Water Source Heat Pump
EF	Exhaust Fan	MUA	Make Up Air (Unit)		

1 N.T.S. **CONTROLS SYMBOL LEGEND**

Chilled Water System Building B & C Control Detail
Typical of (1)

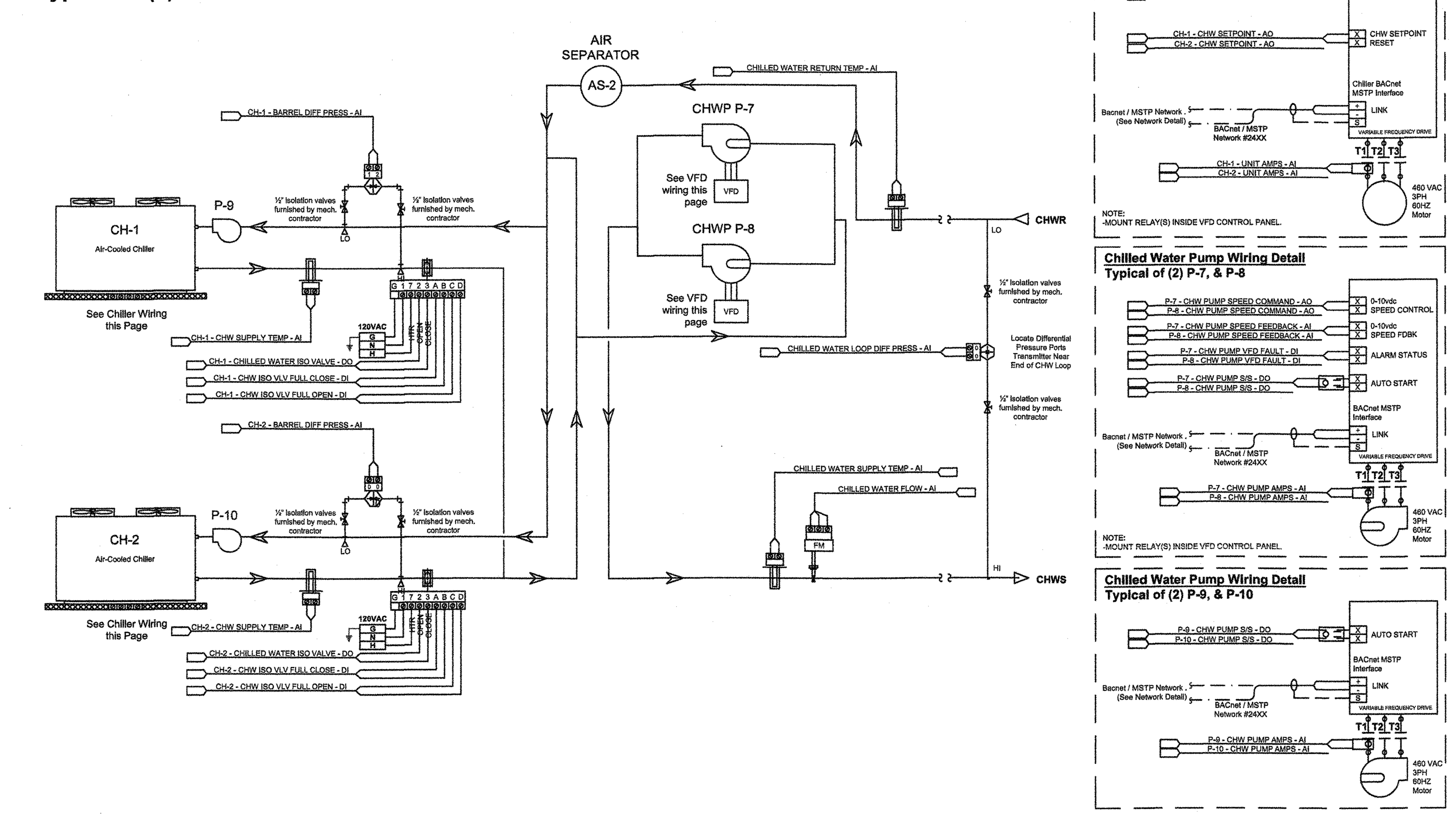

4 N.T.S. **Chilled Water System Building B & C Control Detail**

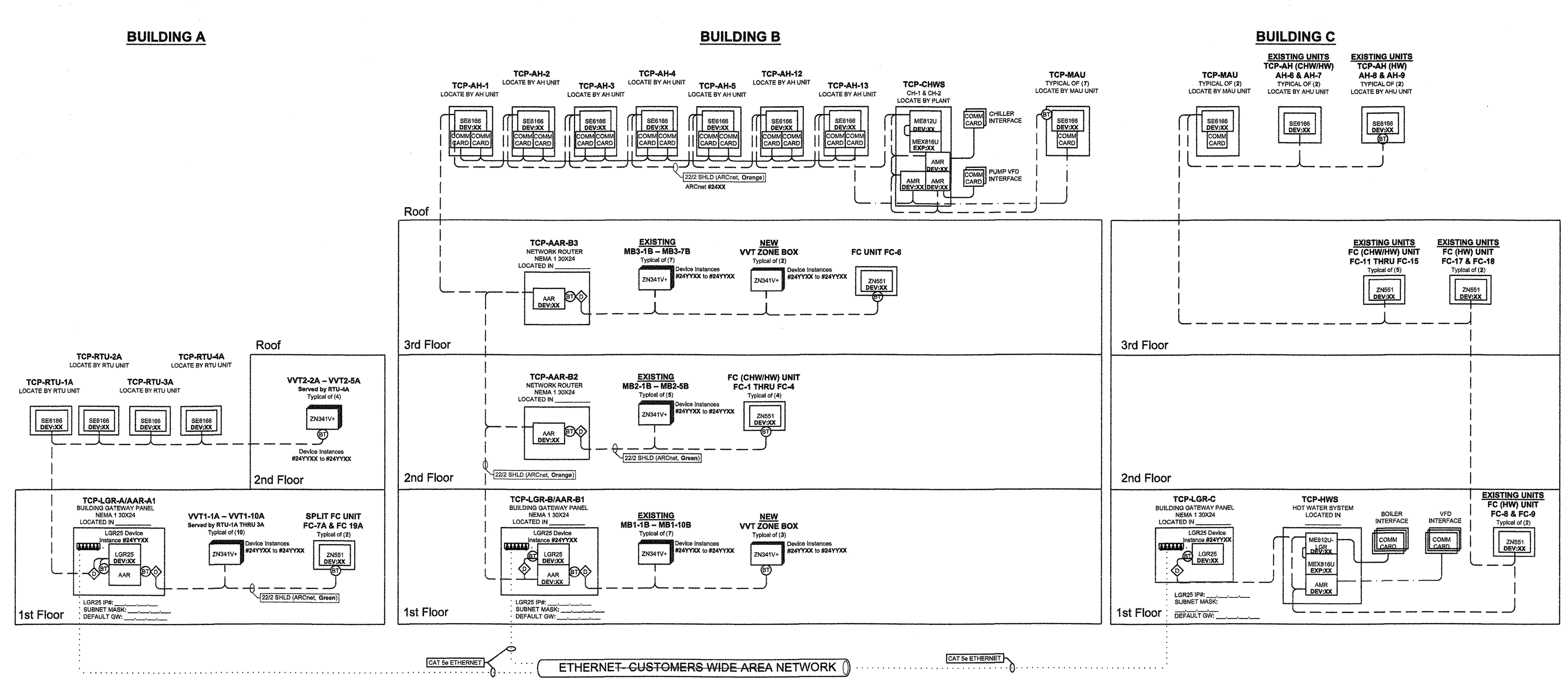

2 N.T.S. **NETWORK ARCHITECTURE**

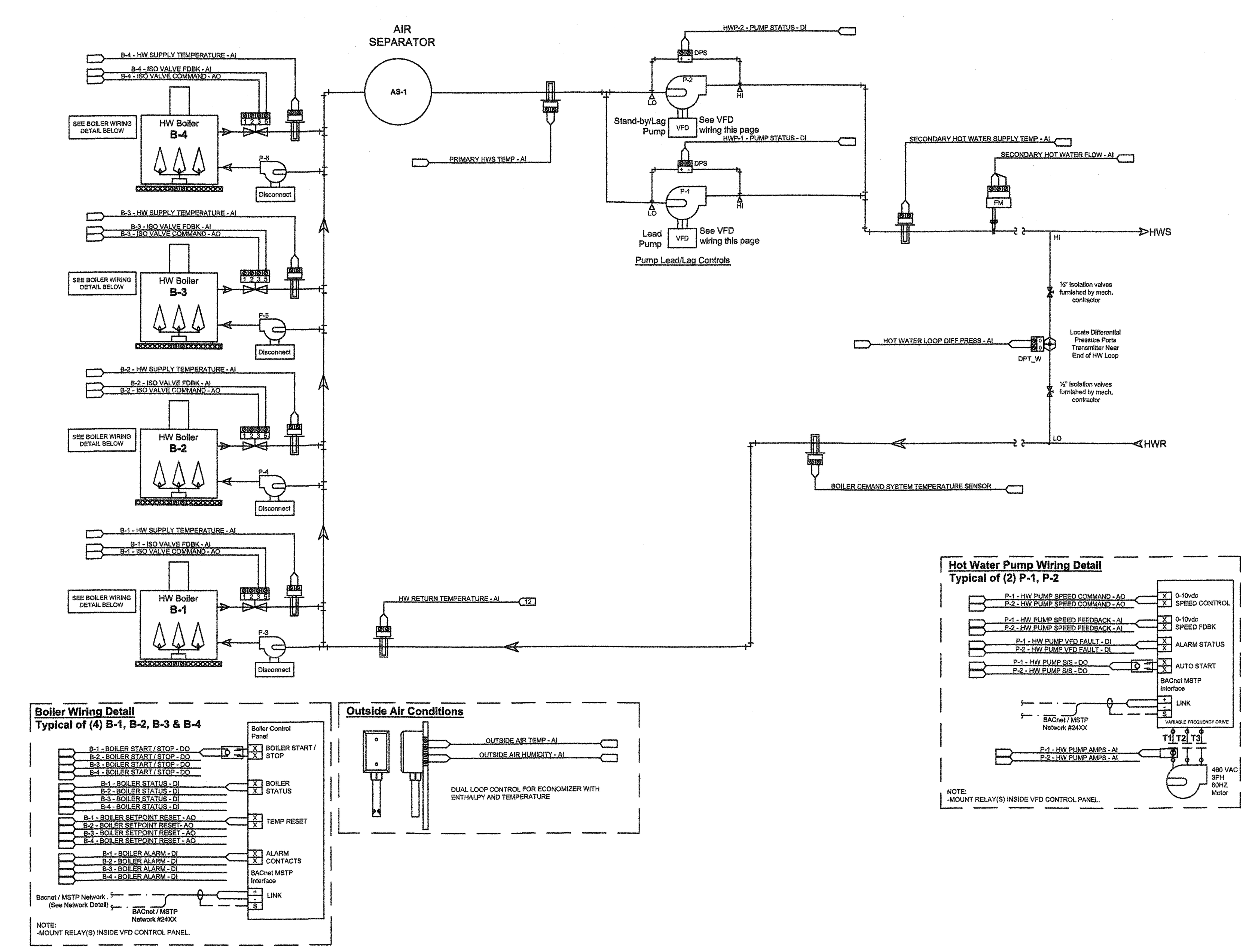

5 N.T.S. **Hot Water System Building C Control Detail**

Air Handler Unit Control – Building B

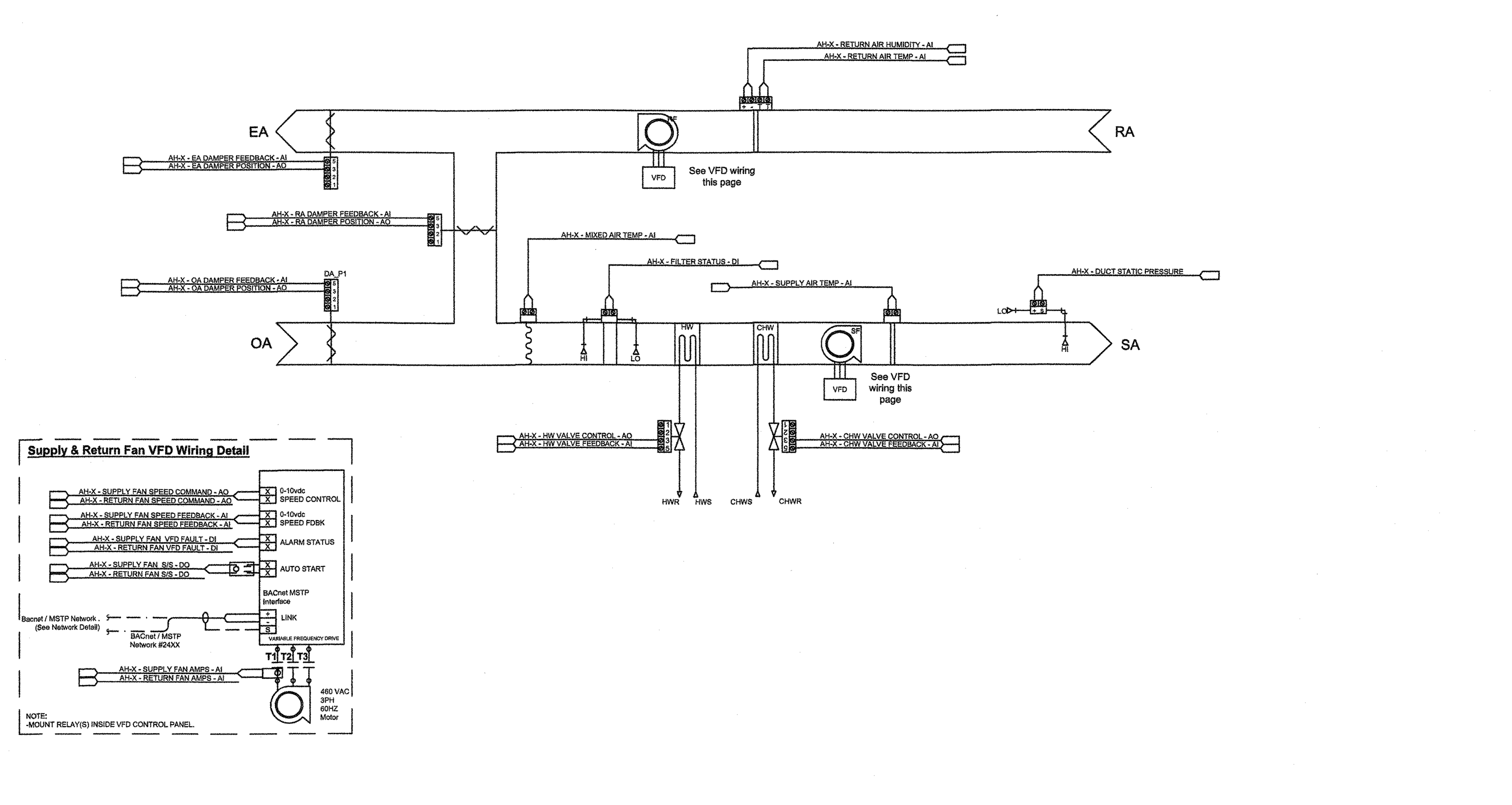

3 N.T.S. **Constant Volume Air Handler Unit Control Building "B" (Typical to AH-1, & AH-5)**

RTU-1B & RTU-2B – 100% OA
RTU-1B is interlocked to EF-26
RTU-2B is interlocked to EF-25

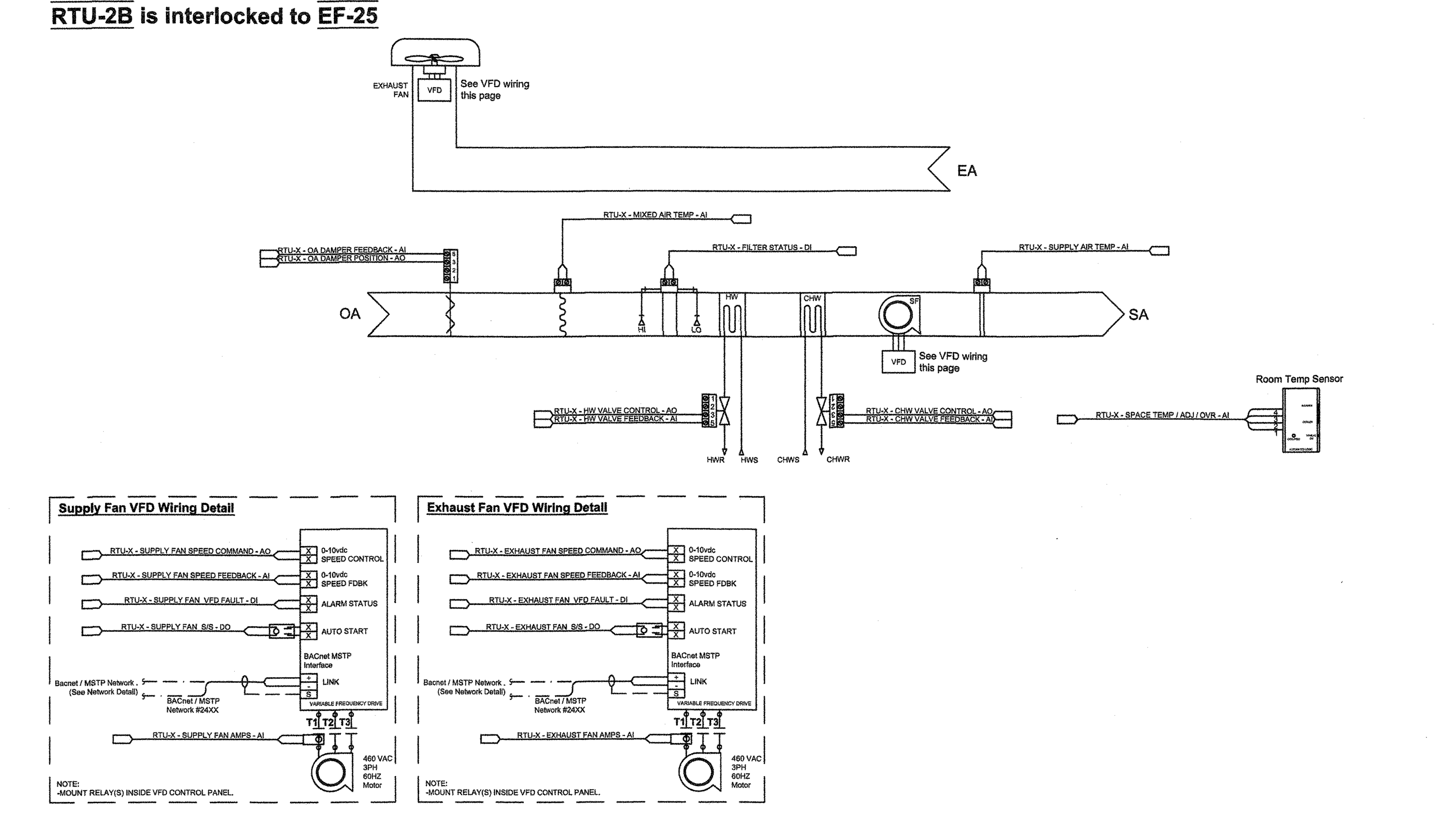

6 N.T.S. **RTU-1B/EF-26 & RTU-2B/EF-25 Control Detail**

J & S CONSULTING ENGINEERS, INC.
ELECTRICAL ▫ MECHANICAL
FIRE PROTECTION
3111 Winona Ave., #102
Burbank, Ca 91504
Tel.: (818) 841-0303
Fax: (818) 841-8531
470 Helga Ct. Unit A
Newbury Park, Ca. 91320
Tel. (818) 398-5793
Fax: (818) 841-8531
www.jandsconsulting.com
E-Mail: jsmail@jandsconsulting.com

PROJECT No. 45461

LICENSED ARCHITECT JEAN ANN AMADOR C-22205 APRIL 30, 2019 RENEWAL DATE STATE OF CALIFORNIA

REGISTERED PROFESSIONAL ENGINEER ARNEL B. DE SILVA No. M22816 EXPIRES 09-30-18 MECHANICAL STATE OF CALIFORNIA

VENTURA COLLEGE
4667 TELEGRAPH ROAD, VENTURA, CALIFORNIA, 93003
VENTURA COUNTY COMMUNITY COLLEGE DISTRICT
MATH & SCIENCE COMPLEX

IDENTIFICATION STAMP
DIV. OF THE STATE ARCHITECT
OFFICE OF REGULATION SERVICES
APPL. 03- 117754
AC___ FLS___ SS___
DATE JUL 0 5 2017

NO.	DATE	DESCRIPTION	BY
	12.19.16	DSA SUBMITTAL	

REVISIONS

DRAWN BY: S.L.
CHECKED BY: A.D.S.
DATE 05.12.17
JOB NO: 45461
SHEET TITLE
MECHANICAL CONTROL DETAILS AND DIAGRAMS
SHEET
M-7.1
DWG # 55 OF 82

Job No. 45461; FILE: N:\45461-VenturaColl\M7-1.dwg; Layout1 Ref. Files: N:\45461-VenturaColl\Controls\Ventura College - CHW & HW System.dwg, N:\45461-VenturaColl\Controls\Ventura College - Airside.dwg, N:\45461-VenturaColl\Controls\4.00 Building C Hot Water System R2.dwg, N:\45461-VenturaColl\Controls\Ventura College - Network Riser.dwg, N:\45461-VenturaColl\Controls\LEGEND.dwg, SHEET.dwg
Plot Date: 05-11-17, 10:47am; Plot scale: 1=1-PS By: S.L. Prev. plot: 05-11-17, 10:19am
05-12-17 DSA SUBMITTAL

Rooftop HP Unit Control
Typical of (3) RTU-1A, RTU-2A & RTU-3A

1st Floor: RTU-1A = New (5) VVT Zones
1st Floor: RTU-2A = Constant Volume
1st Floor: RTU-3A = Constant Volume

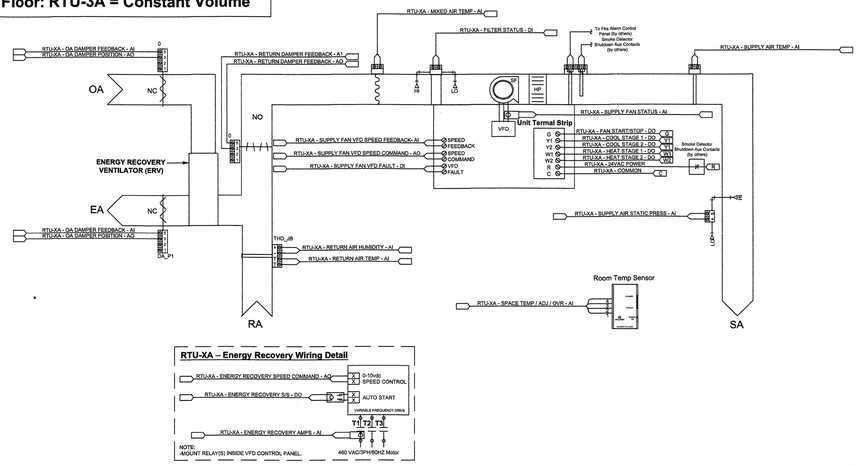

RTU-XA – Energy Recovery Wiring Detail

1 N.T.S. **ROOFTOP HP UNIT CONTROLRTU-1A, RTU2A, RTU-3A WITH ENERGY RECOVERY VENTILATOR**

VVT Zone Box

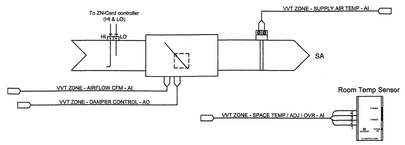

2 N.T.S. **VVT ZONE BOX DETAIL**

Double Duct Zone Air Handler Unit Control – Building B
Typical of (3) AH-2, 3, & -4

3rd Floor: AH-2 = Existing (7) MB Zones
2nd Floor: AH-4 = Existing (5) MB Zones
1st Floor: AH-3 = Existing (7) MB Zones

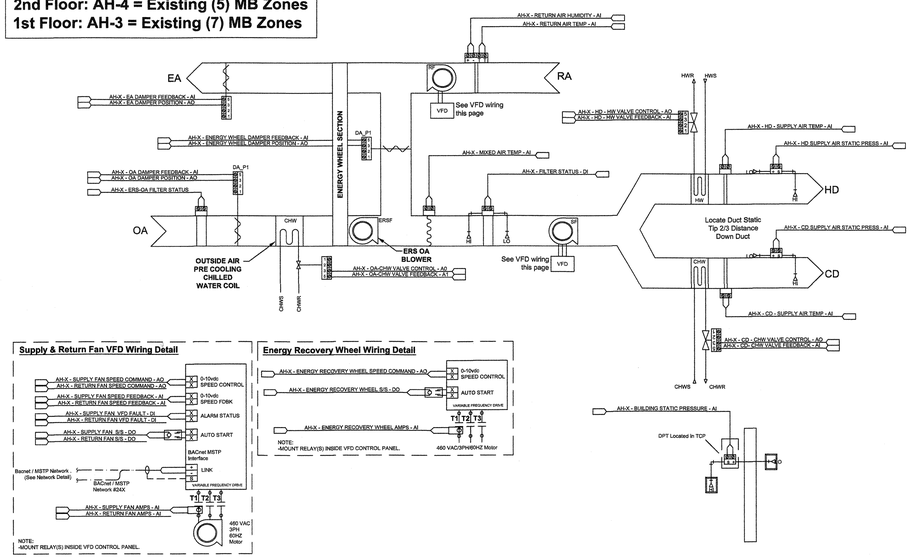

Supply & Return Fan VFD Wiring Detail

Energy Recovery Wheel Wiring Detail

3 N.T.S. **DOUBLE DUCT ZONE AIR HANDLER UNIT CONTROL BUILDING 'B' AH-2, 3 & 4**

Dual Duct VAV Box

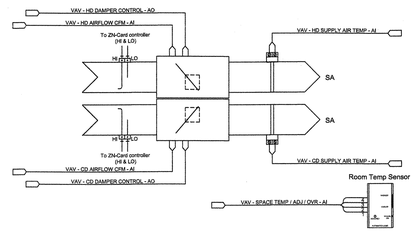

4 N.T.S. **DUAL DUCT VAV BOX**

Make Up Air Unit Control – Building B
EMAU-1, -3, -5, -6, -7, -8, -9

Make Up Air Unit Control – Building C
EMAU-10, -11

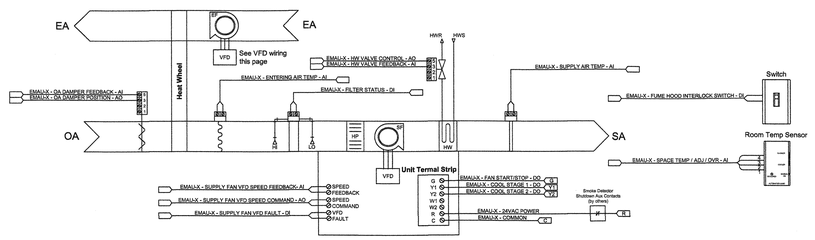

Supply Fan VFD Wiring Detail

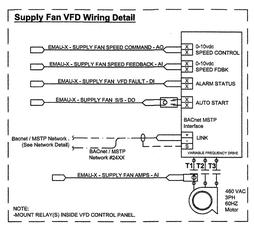

Exhaust Fan VFD Wiring Detail

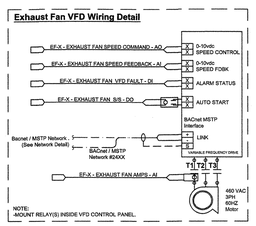

Heat Recovery Wiring Detail

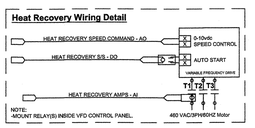

5 N.T.S. **MAKE-UP AIR UNIT CONTROL- BLDG. 'B' - EMAU-1, 3, 5, 6, 7, 8 & 9**
MAKE-UP AIR UNIT CONTROL- BLDG. 'C' - EMAU-10 & 11

J & S CONSULTING ENGINEERS, INC.
ELECTRICAL ▫ MECHANICAL
FIRE PROTECTION
3111 Winona Ave., #102
Burbank, Ca 91504
Tel.: (818) 841-0303
Fax: (818) 841-8531
470 Helga Ct. Unit A
Newbury Park, Ca. 91320
Tel. (818) 398-5793
Fax: (818) 841-8531
www.jandsconsulting.com
E-Mail: jsmail@jandsconsulting.com

PROJECT No. 45461

LICENSED ARCHITECT DANIEL F. DOMINGUEZ C-22205 APRIL 30, 2019 RENEWAL DATE STATE OF CALIFORNIA

REGISTERED PROFESSIONAL ENGINEER DANIEL B. DE SILVA No. M22816 EXPIRES 09-30-18 MECHANICAL STATE OF CALIFORNIA

VENTURA COLLEGE
4667 TELEGRAPH ROAD, VENTURA , CALIFORNIA, 93003
VENTURA COUNTY COMMUNITY COLLEGE DISTRICT
MATH & SCIENCE COMPLEX

IDENTIFICATION STAMP
DIV. OF THE STATE ARCHITECT
OFFICE OF REGULATION SERVICES
APPL. 03- 117754
AC — FLS — SS
DATE JUN 05 2017

NO.	DATE	DESCRIPTION	BY
	12.19.16	DSA SUBMITTAL	
REVISIONS			

DRAWN BY:	S.L.
CHECKED BY:	A.D.S.
DATE	05.12.17
JOB NO:	45461

SHEET TITLE

MECHANICAL CONTROL DETAILS AND DIAGRAMS

SHEET

M-7.2

DWG # 56 OF 82

05-12-17 DSA SUBMITTAL

Job No. 45461 - FILE: K:\45461-Ventura\CAD\M7-2.dwg, Layout1, Ref_Dwg: K:\45461-Ventura\CAD\Control\Ventura College - Ancillas.dwg, 24X36.dwg
Plot Date: 05-11-17, 10:48am, Plot scale: 1'=1'-0", By: S.L. Prev. plot: 05-11-17, 10:20am

Fan Coil Unit – CHW/HW - Building B
New FC-1 thru FC-5
Existing Fan Coil Unit – CHW/HW - Building C
Existing FC-11 thru FC-15

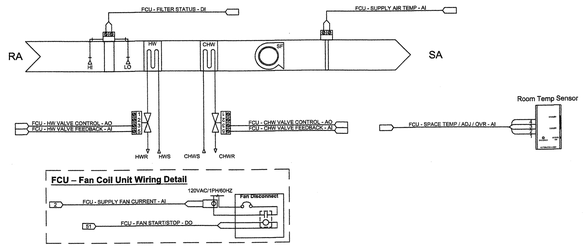

1 N.T.S. **FAN COIL UNIT (CHW/HW)- BUILDING "B" - NEW FC-1 THRU FC5**
EXISTING FAN COIL UNIT (CHW/HW)- BUILDING "C" - EXISTING FC-11 THRU FC-15

Existing Air Handler Unit Control (CHW/HW) – Building C
AH-6 & -7

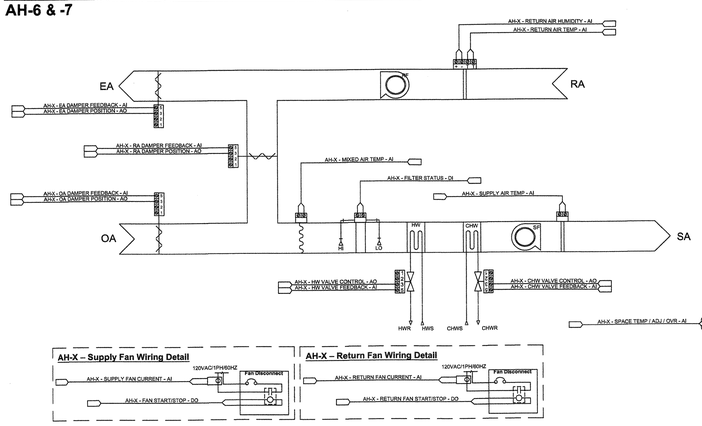

2 N.T.S. **EXISTING AIR HANDLER UNIT CONTROL (CHW/HW)- BUILDING "C"- AH-6 & 7**

Existing Air Handler Unit Control (HW) – Building C
AH-8 & -9

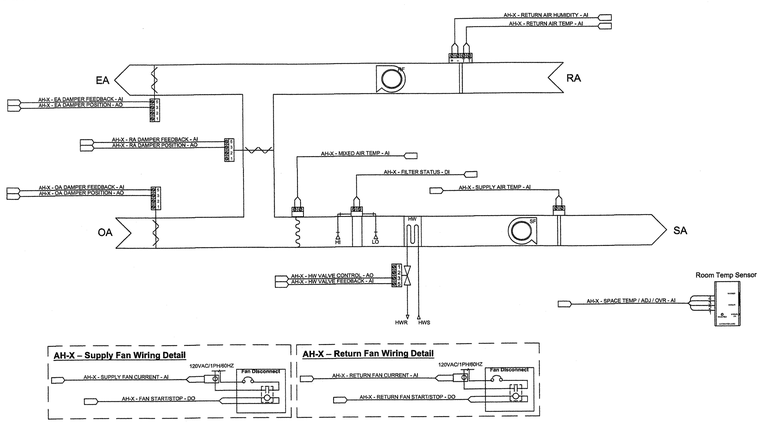

3 N.T.S. **EXISTING AIR HANDLER UNIT CONTROL (HW)- BUILDING "C" - AH-8 & 9**

Existing Fan Coil Unit – HW
FC-8, -9, 17 & -18

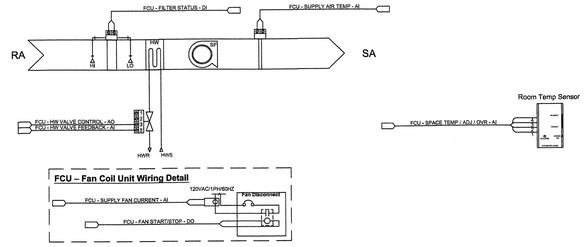

4 N.T.S. **EXISTING FAN COIL UNIT CONTROL (HW) - FC-8, 9, 17 & 18**

5 N.T.S.

6 N.T.S.

J & S CONSULTING ENGINEERS, INC.
ELECTRICAL = MECHANICAL
FIRE PROTECTION
3111 Winona Ave., #102
Burbank, Ca 91504
Tel.: (818) 841-0303
Fax: (818) 841-8531
470 Helga Ct. Unit A
Newbury Park, Ca. 91320
Tel. (818) 398-5793
Fax: (818) 841-8531
www.jandsconsulting.com
E-Mail: jsmail@jandsconsulting.com
PROJECT No. 45461

LICENSED ARCHITECT — SAM ANN AMOROSO — C-22205 — APRIL 30, 2019 RENEWAL DATE — STATE OF CALIFORNIA

REGISTERED PROFESSIONAL ENGINEER — ANNE B. DE SILVA — No. M22816 — EXPIRES 09-30-18 — MECHANICAL — STATE OF CALIFORNIA

VENTURA COLLEGE

4667 TELEGRAPH ROAD, VENTURA, CALIFORNIA, 93003
VENTURA COUNTY COMMUNITY COLLEGE DISTRICT

MATH & SCIENCE COMPLEX

IDENTIFICATION STAMP
DIV. OF THE STATE ARCHITECT
OFFICE OF REGULATION SERVICES
APPL. 03- 117754
AC FLS SS
DATE JUL 05 2017

NO.	DATE	DESCRIPTION	BY
	12.19.16	DSA SUBMITTAL	
REVISIONS			

DRAWN BY:	S.L.
CHECKED BY:	A.D.S.
DATE	05.12.17
JOB NO:	45461

SHEET TITLE

MECHANICAL CONTROL DETAILS AND DIAGRAMS

SHEET

M-7.3

DWG # 57 OF 82

Job No. 45461 | 12/14/2016 | New mod#1 (2 Sets) | Sheet Ref. Mod. M-7.3.dwg | Plotted: 05/12/2017 11:02:55am | By: Anne Marie Bonnet
05-12-17 DSA SUBMITTAL

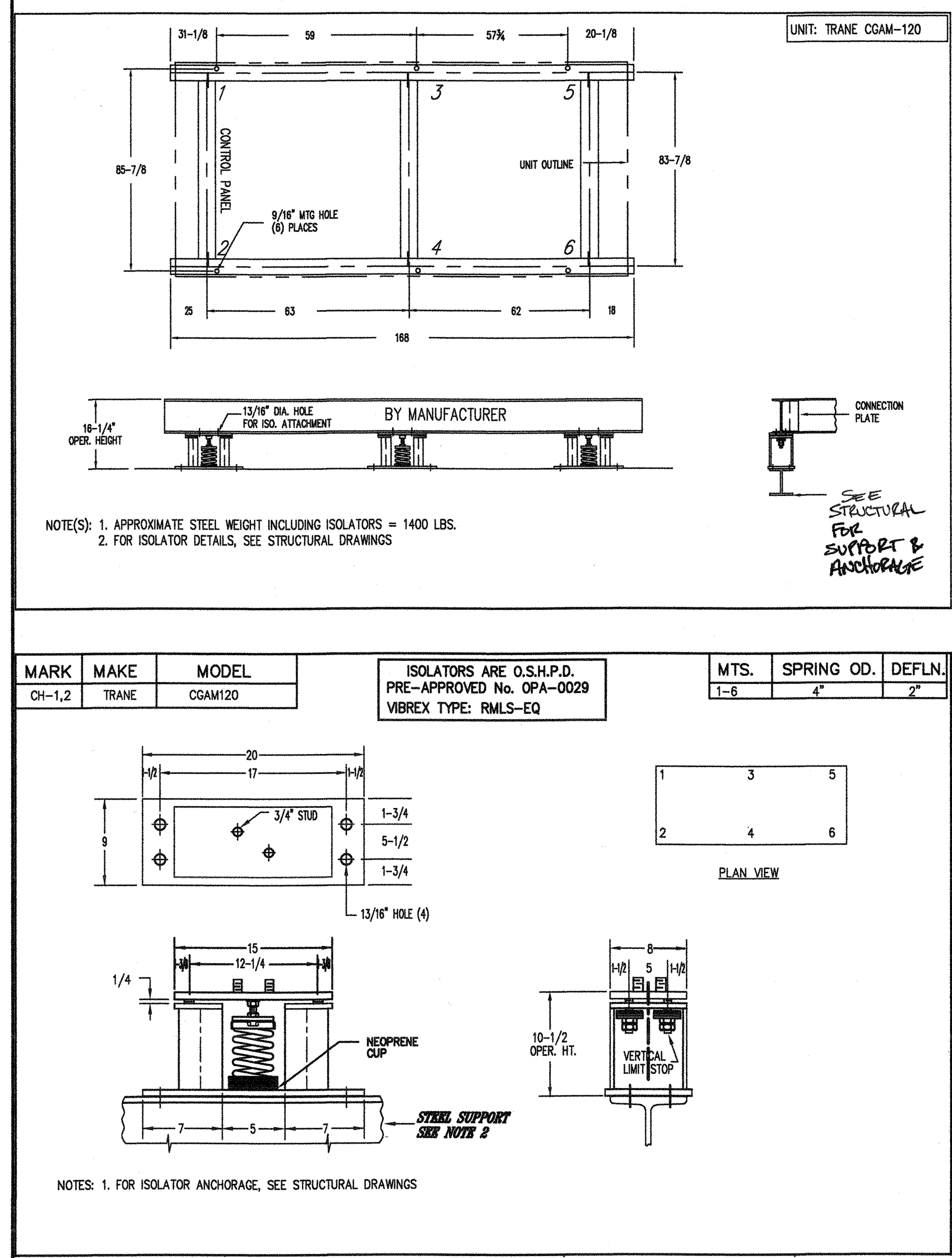

NOTE(S): 1. APPROXIMATE STEEL WEIGHT INCLUDING ISOLATORS = 1400 LBS.
2. FOR ISOLATOR DETAILS, SEE STRUCTURAL DRAWINGS

MARK	MAKE	MODEL
CH-1,2	TRANE	CGAM120

ISOLATORS ARE O.S.H.P.D.
PRE-APPROVED No. OPA-0029
VIBREX TYPE: RMLS-EQ

MTS.	SPRING OD.	DEFLN.
1-6	4"	2"

NOTES: 1. FOR ISOLATOR ANCHORAGE, SEE STRUCTURAL DRAWINGS

1 CH-1 & CH-2 SUPPORT FRAME (BY MANUFACTURER)
N.T.S.

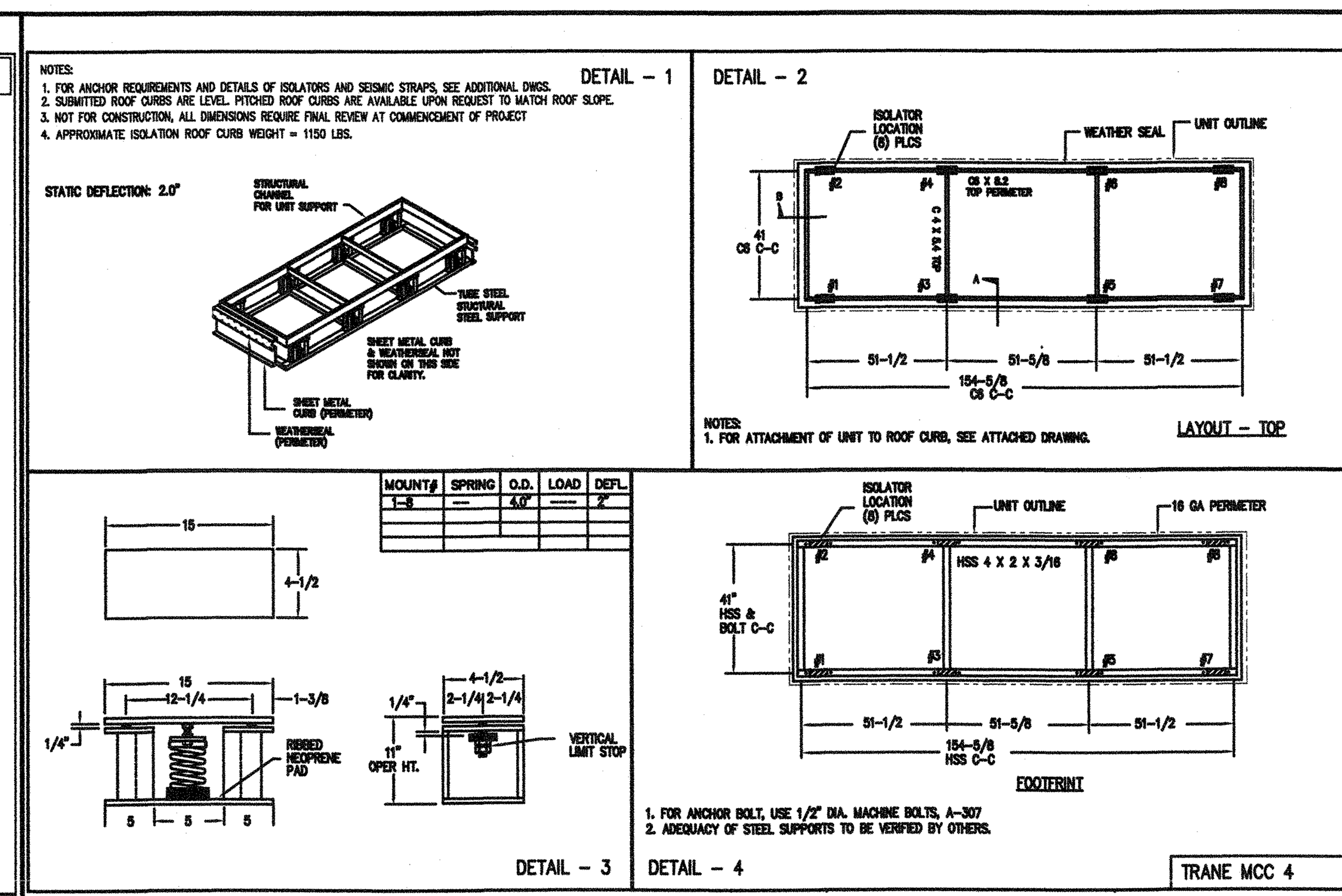

NOTES:
1. FOR ANCHOR REQUIREMENTS AND DETAILS OF ISOLATORS AND SEISMIC STRAPS, SEE ADDITIONAL DWGS.
2. SUBMITTED ROOF CURBS ARE LEVEL. PITCHED ROOF CURBS ARE AVAILABLE UPON REQUEST TO MATCH ROOF SLOPE.
3. NOT FOR CONSTRUCTION, ALL DIMENSIONS REQUIRE FINAL REVIEW AT COMMENCEMENT OF PROJECT
4. APPROXIMATE ISOLATION ROOF CURB WEIGHT = 1150 LBS.

NOTES:
1. FOR ATTACHMENT OF UNIT TO ROOF CURB, SEE ATTACHED DRAWING.

MOUNT#	SPRING	O.D.	LOAD	DEFL.
1-8	—	4.0"	——	2"

1. FOR ANCHOR BOLT, USE 1/2" DIA. MACHINE BOLTS, A-307
2. ADEQUACY OF STEEL SUPPORTS TO BE VERIFIED BY OTHERS.

2 AH-1 & AH-5 SUPPORT CURB (BY MANUFACTURER)
N.T.S.

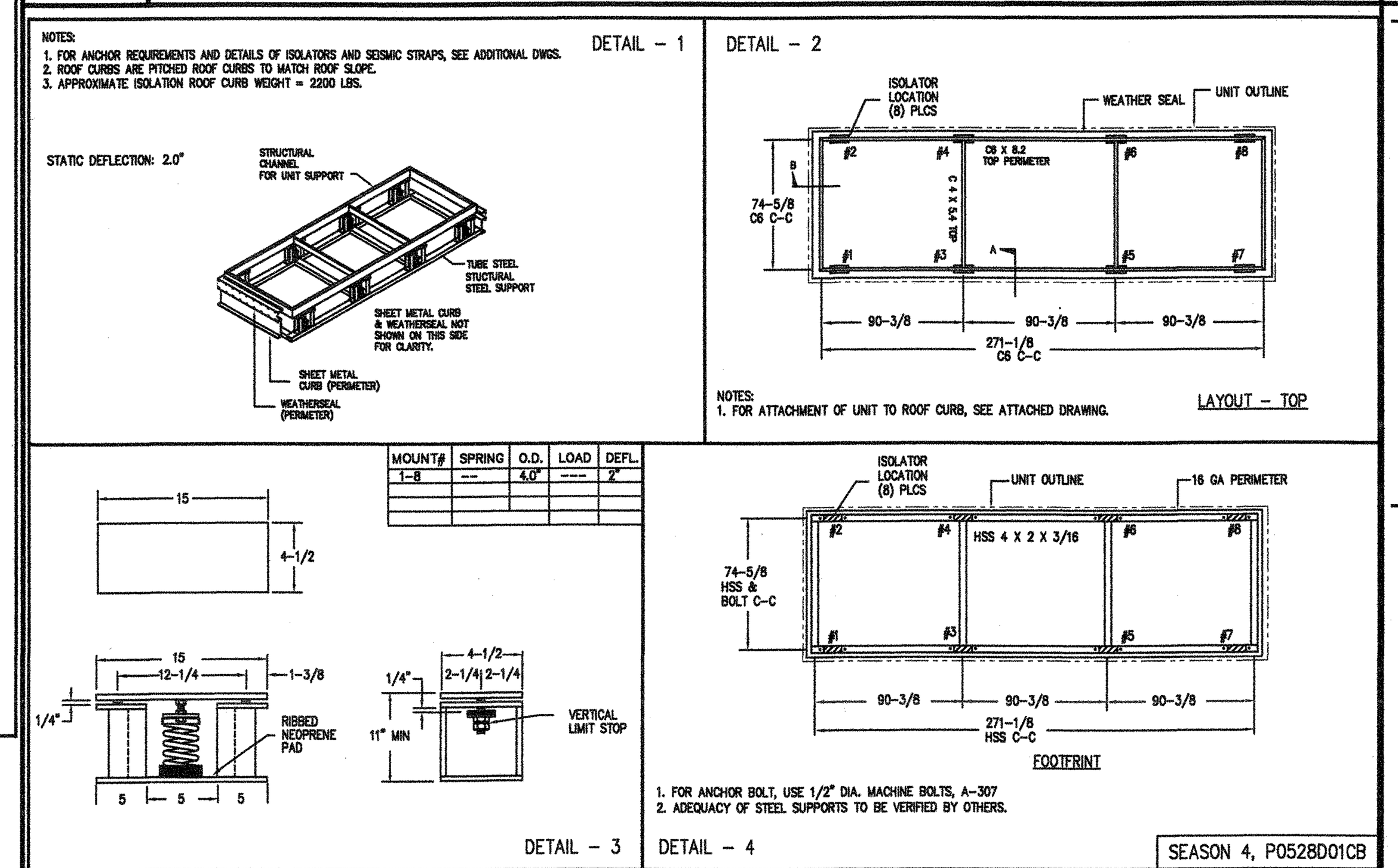

NOTES:
1. FOR ANCHOR REQUIREMENTS AND DETAILS OF ISOLATORS AND SEISMIC STRAPS, SEE ADDITIONAL DWGS.
2. ROOF CURBS ARE PITCHED ROOF CURBS TO MATCH ROOF SLOPE.
3. APPROXIMATE ISOLATION ROOF CURB WEIGHT = 2200 LBS.

NOTES:
1. FOR ATTACHMENT OF UNIT TO ROOF CURB, SEE ATTACHED DRAWING.

MOUNT#	SPRING	O.D.	LOAD	DEFL.
1-8	—	4.0"	——	2"

1. FOR ANCHOR BOLT, USE 1/2" DIA. MACHINE BOLTS, A-307
2. ADEQUACY OF STEEL SUPPORTS TO BE VERIFIED BY OTHERS.

3 AH-2 & AH-3 SUPPORT CURB (BY MANUFACTURER)
N.T.S.

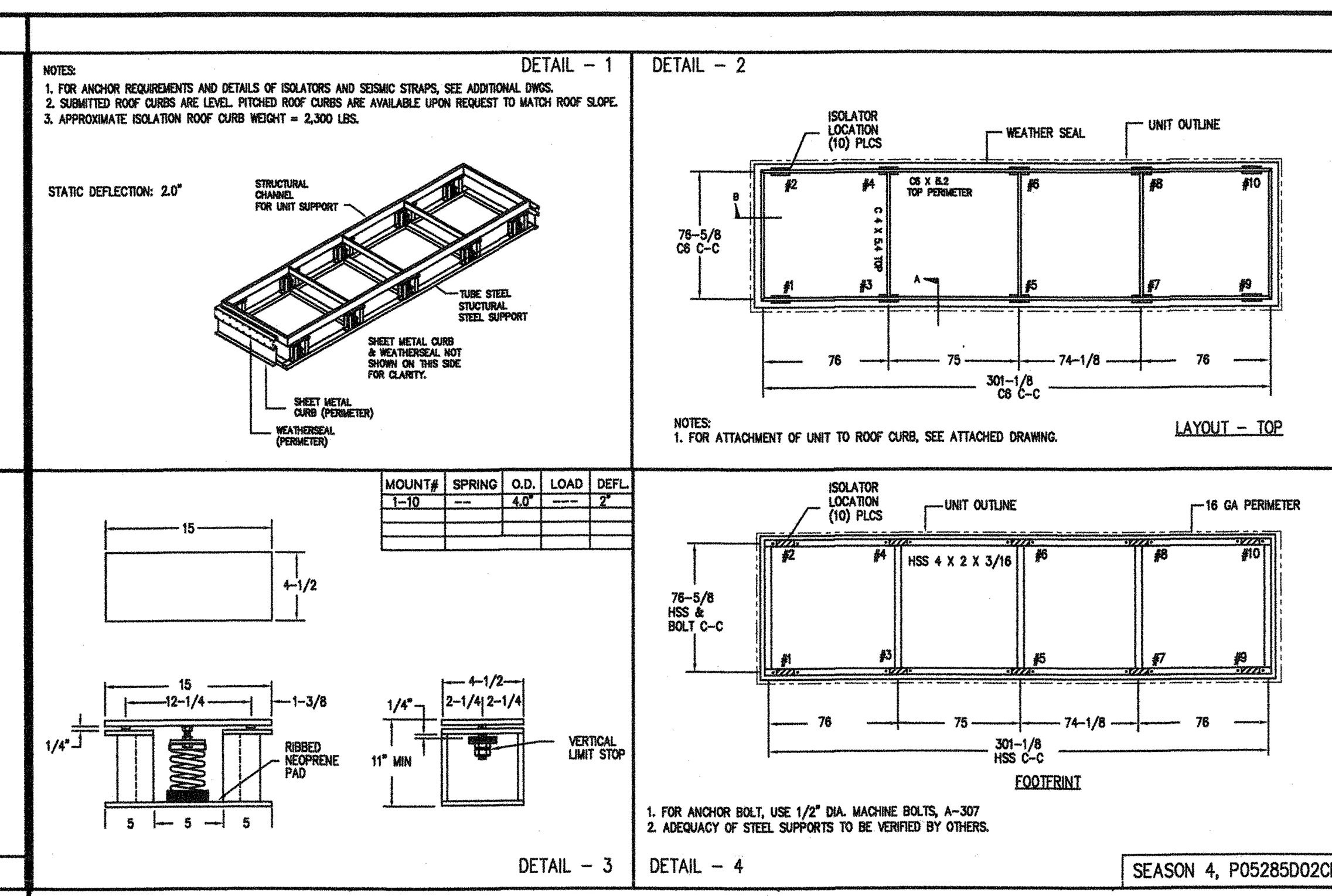

NOTES:
1. FOR ANCHOR REQUIREMENTS AND DETAILS OF ISOLATORS AND SEISMIC STRAPS, SEE ADDITIONAL DWGS.
2. SUBMITTED ROOF CURBS ARE LEVEL. PITCHED ROOF CURBS ARE AVAILABLE UPON REQUEST TO MATCH ROOF SLOPE.
3. APPROXIMATE ISOLATION ROOF CURB WEIGHT = 2,300 LBS.

NOTES:
1. FOR ATTACHMENT OF UNIT TO ROOF CURB, SEE ATTACHED DRAWING.

MOUNT#	SPRING	O.D.	LOAD	DEFL.
1-10	—	4.0"	——	2"

1. FOR ANCHOR BOLT, USE 1/2" DIA. MACHINE BOLTS, A-307
2. ADEQUACY OF STEEL SUPPORTS TO BE VERIFIED BY OTHERS.

4 AH-4 SUPPORT CURB (BY MANUFACTURER)
N.T.S.

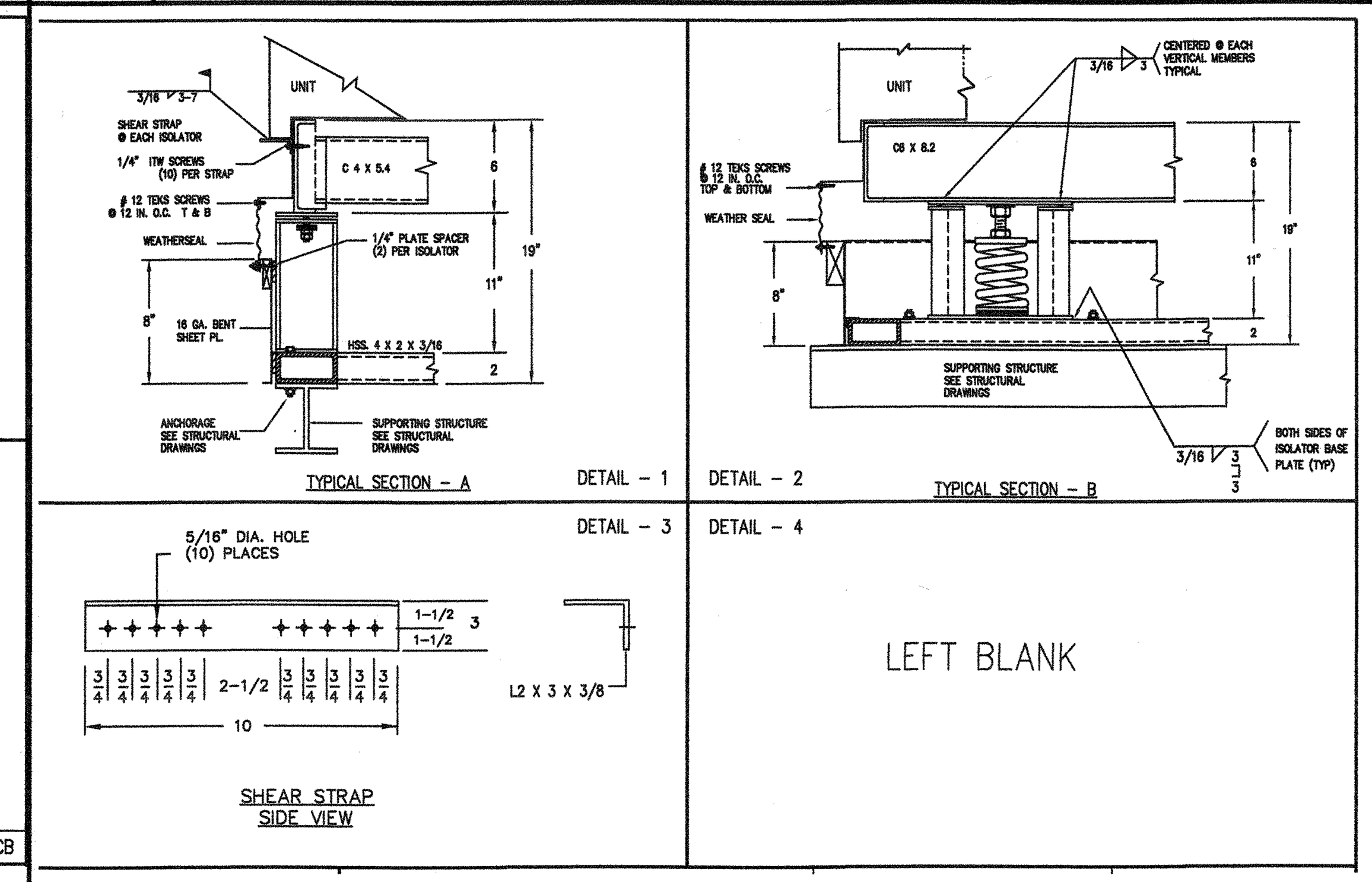

5 AH-2, AH-3 & AH-4 SUPPORT CURB (BY MANUFACTURER)
N.T.S.

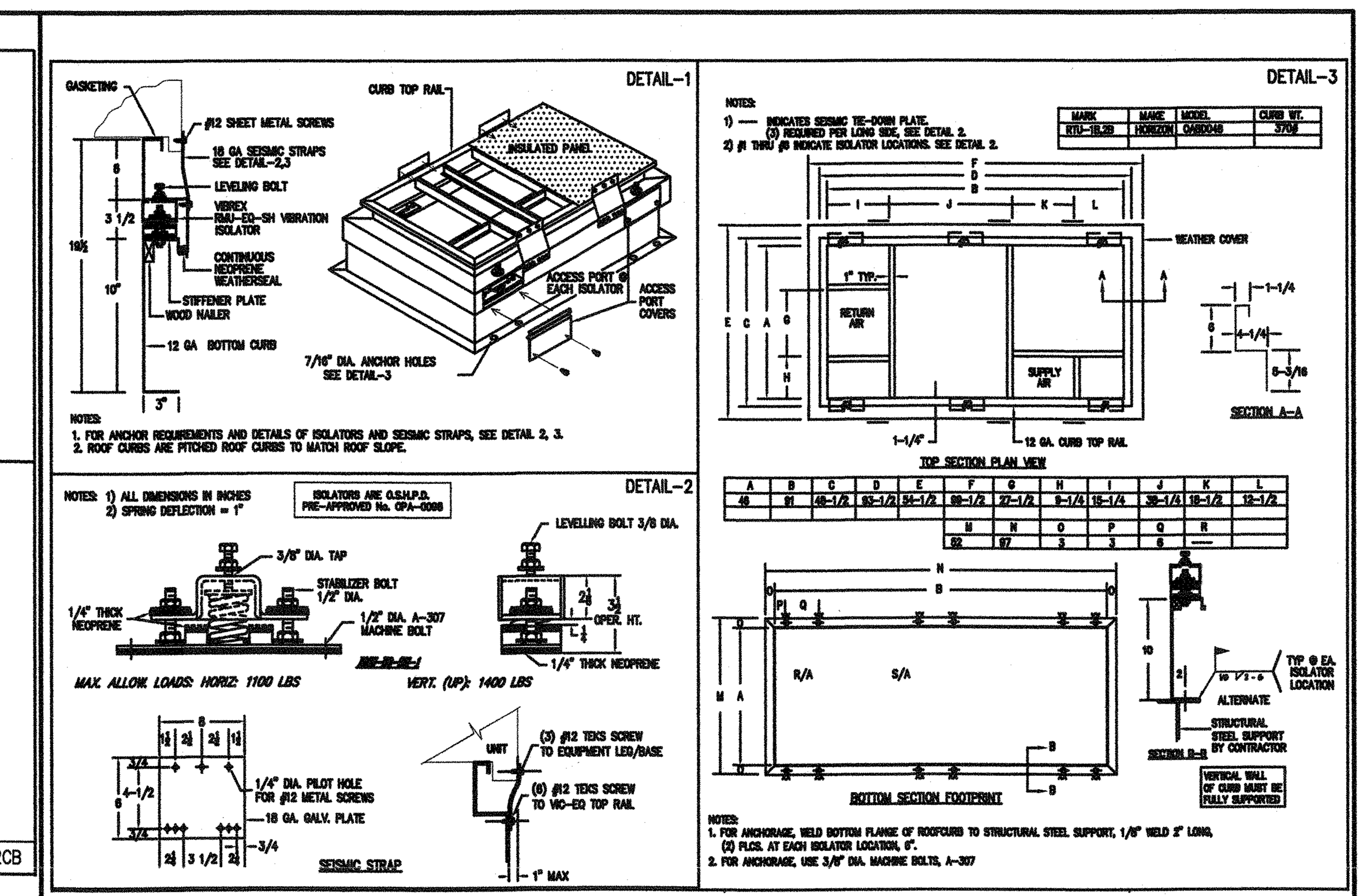

6 RTU-1B & RTU-2B SUPPORT CURB (BY MANUFACTURER)
N.T.S.

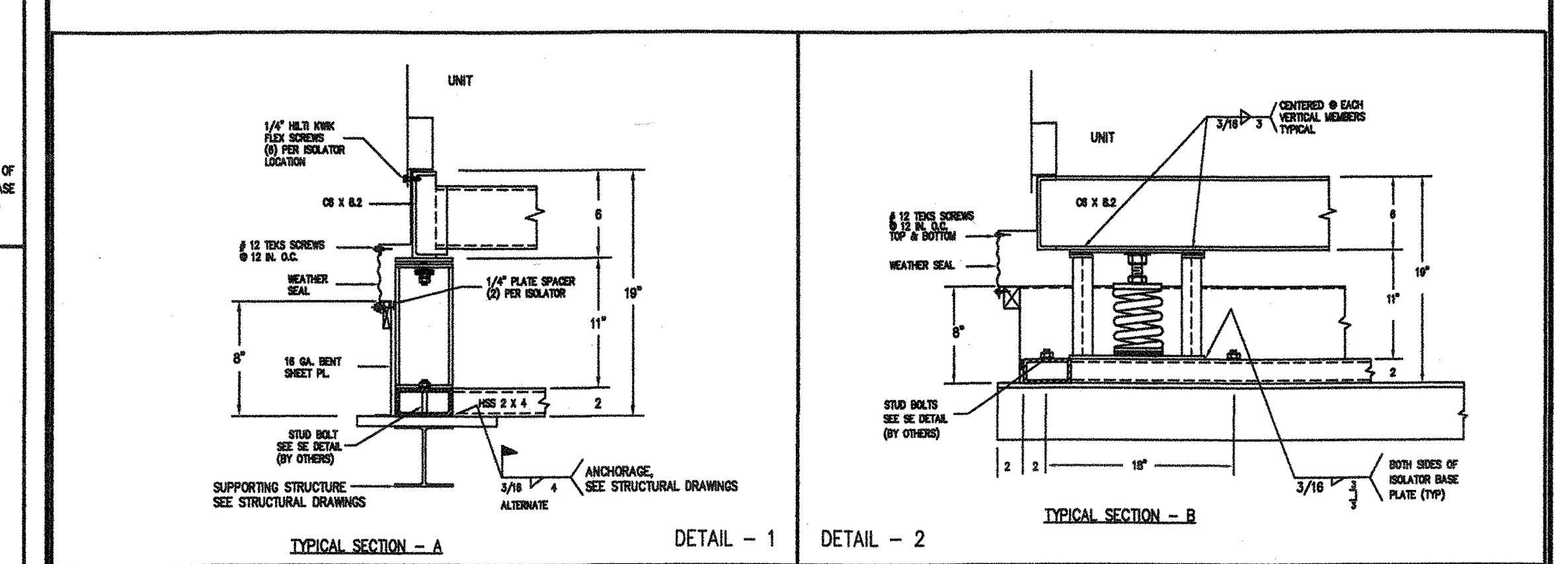

7 AH-1, AH-5, EMAU-1 THRU EMAU-9, EMAU-13 & EMAU-14 CURB (BY MANUFACTURER)
N.T.S.

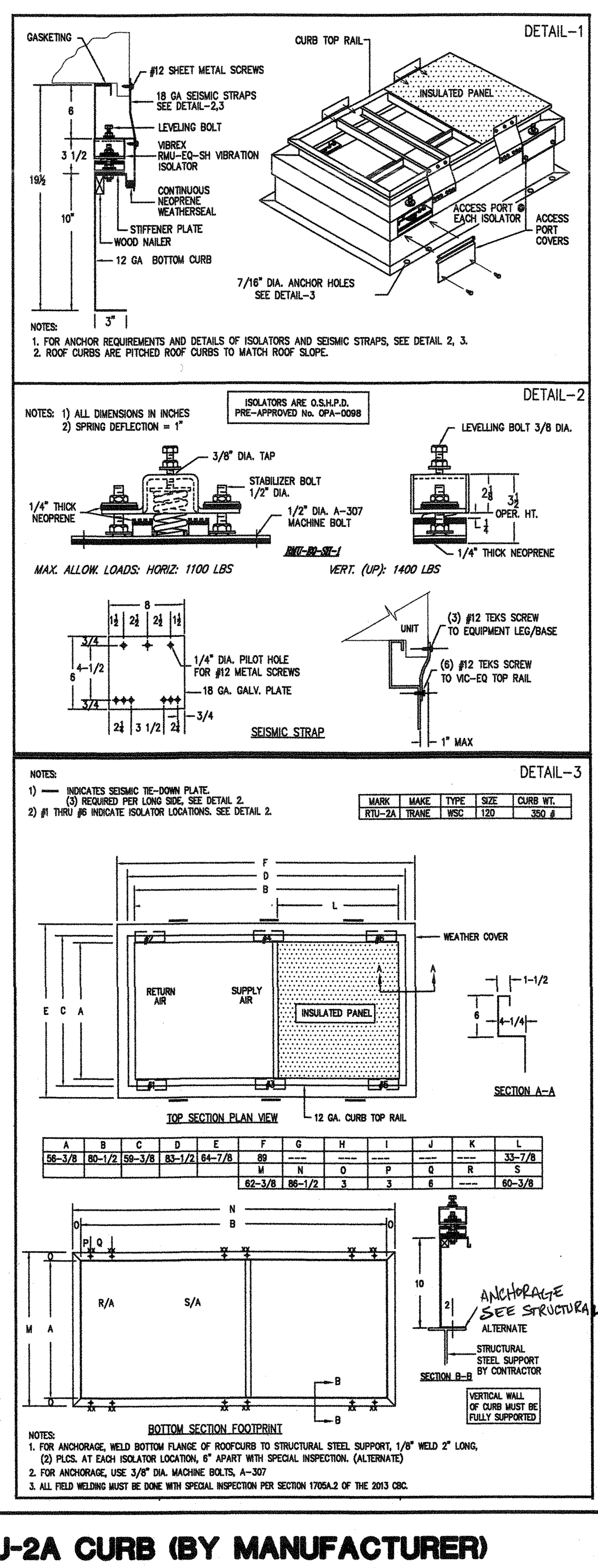

NOTES:
1. FOR ANCHOR REQUIREMENTS AND DETAILS OF ISOLATORS AND SEISMIC STRAPS, SEE DETAIL 2, 3.
2. ROOF CURBS ARE PITCHED ROOF CURBS TO MATCH ROOF SLOPE.

NOTES: 1) ALL DIMENSIONS IN INCHES
2) SPRING DEFLECTION = 1"

NOTES:
1) — INDICATES SEISMIC TIE-DOWN PLATE. (3) REQUIRED PER LONG SIDE, SEE DETAIL 2.
2) #1 THRU #6 INDICATE ISOLATOR LOCATIONS. SEE DETAIL 2.

MARK	MAKE	TYPE	SIZE	CURB WT.
RTU-2A	TRANE	WSC	120	350 #

A	B	C	D	E	F	G	H	I	J	K	L
56-3/8	80-1/2	59-3/8	83-1/2	64-7/8	89	---	---	---	---	---	33-7/8
					M	N	O	P	Q	R	S
					62-3/8	86-1/2	3	3	6	---	60-3/8

NOTES:
1. FOR ANCHORAGE, WELD BOTTOM FLANGE OF ROOFCURB TO STRUCTURAL STEEL SUPPORT, 1/8" WELD 2" LONG, (2) PLCS. AT EACH ISOLATOR LOCATION, 6" APART WITH SPECIAL INSPECTION. (ALTERNATE)
2. FOR ANCHORAGE, USE 3/8" DIA. MACHINE BOLTS, A-307
3. ALL FIELD WELDING MUST BE DONE WITH SPECIAL INSPECTION PER SECTION 1705A.2 OF THE 2013 CBC.

8 RTU-2A CURB (BY MANUFACTURER)
N.T.S.

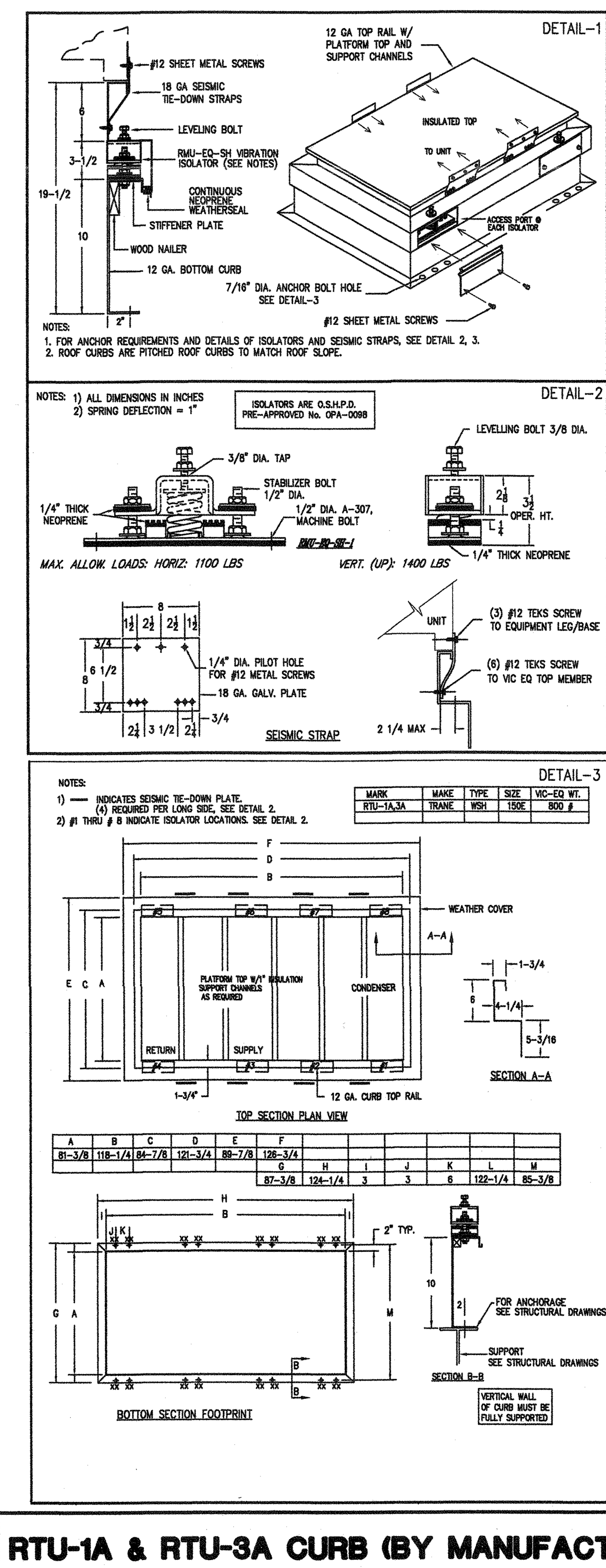

NOTES:
1. FOR ANCHOR REQUIREMENTS AND DETAILS OF ISOLATORS AND SEISMIC STRAPS, SEE DETAIL 2, 3.
2. ROOF CURBS ARE PITCHED ROOF CURBS TO MATCH ROOF SLOPE.

NOTES: 1) ALL DIMENSIONS IN INCHES
2) SPRING DEFLECTION = 1"

NOTES:
1) — INDICATES SEISMIC TIE-DOWN PLATE. (4) REQUIRED PER LONG SIDE, SEE DETAIL 2.
2) #1 THRU # 8 INDICATE ISOLATOR LOCATIONS. SEE DETAIL 2.

MARK	MAKE	TYPE	SIZE	VIC-EQ WT.
RTU-1A,3A	TRANE	WSH	150E	800 #

A	B	C	D	E	F						
81-3/8	118-1/4	84-7/8	121-3/4	89-7/8	126-3/4						
					G	H	I	J	K	L	M
					87-3/8	124-1/4	3	3	6	122-1/4	85-3/8

9 RTU-1A & RTU-3A CURB (BY MANUFACTURER)
N.T.S.

MARK	MAKE	MODEL
B-1,2,3,4	HARSCO	N1000MFD

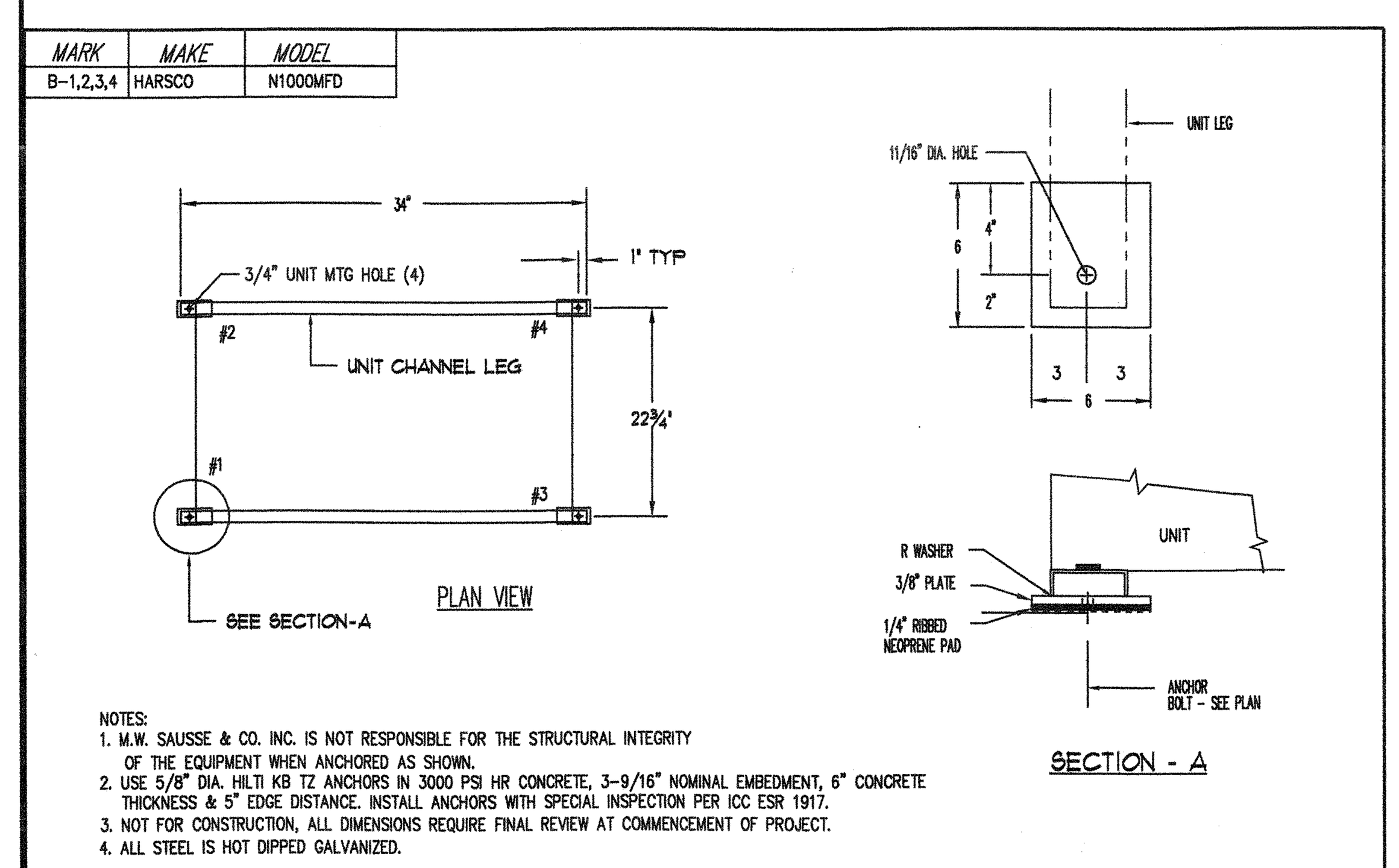

NOTES:
1. M.W. SAUSSE & CO. INC. IS NOT RESPONSIBLE FOR THE STRUCTURAL INTEGRITY OF THE EQUIPMENT WHEN ANCHORED AS SHOWN.
2. USE 5/8" DIA. HILTI KB TZ ANCHORS IN 3000 PSI HR CONCRETE, 3-9/16" NOMINAL EMBEDMENT, 6" CONCRETE THICKNESS & 5" EDGE DISTANCE. INSTALL ANCHORS WITH SPECIAL INSPECTION PER ICC ESR 1917.
3. NOT FOR CONSTRUCTION, ALL DIMENSIONS REQUIRE FINAL REVIEW AT COMMENCEMENT OF PROJECT.
4. ALL STEEL IS HOT DIPPED GALVANIZED.

10 BOILER B-1 THRU B-4 SUPPORT CURB (BY MANUFACTURER)
N.T.S.

MARK	MAKE	MODEL	SIZE	STEEL FRAME
P-3,4,5,6	WEINMAN	145JM	1.5 HP	C6 X 8.2

RESTRAINTS ARE O.S.H.P.D.
PRE-APPROVED No. OPA 0437
VIBREX TYPE: S/R 3200

ALLOWABLE LOADS:
P SIDE = 650 LBS.
P THRUST = 650 LBS.
P UPLIFT = 650 LBS.

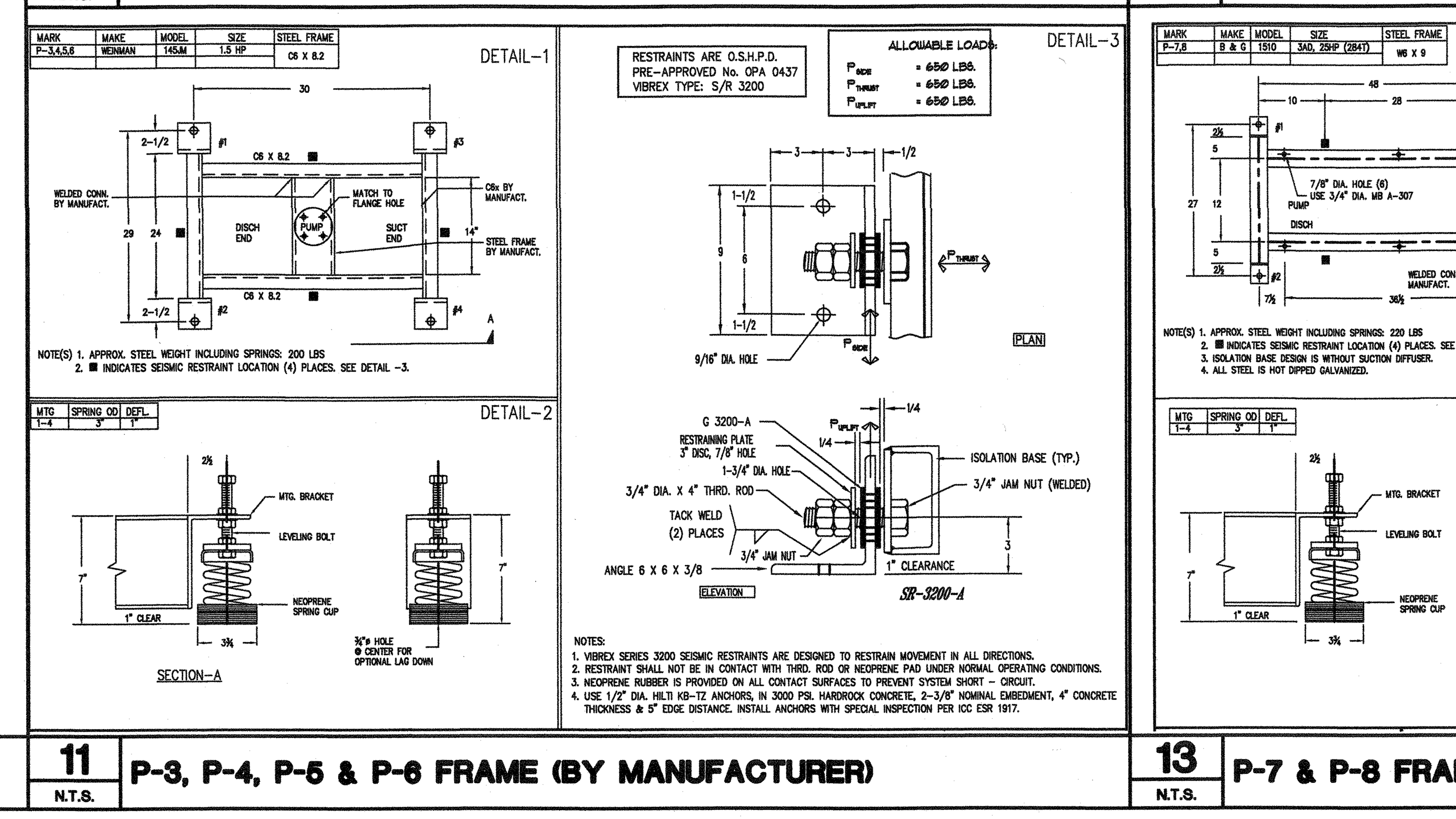

NOTE(S) 1. APPROX. STEEL WEIGHT INCLUDING SPRINGS: 200 LBS
2. ■ INDICATES SEISMIC RESTRAINT LOCATION (4) PLACES. SEE DETAIL -3.

MTG	SPRING OD	DEFL.
1-4	3"	1"

NOTES:
1. VIBREX SERIES 3200 SEISMIC RESTRAINTS ARE DESIGNED TO RESTRAIN MOVEMENT IN ALL DIRECTIONS.
2. RESTRAINT SHALL NOT BE IN CONTACT WITH THRD. ROD OR NEOPRENE PAD UNDER NORMAL OPERATING CONDITIONS.
3. NEOPRENE RUBBER IS PROVIDED ON ALL CONTACT SURFACES TO PREVENT SYSTEM SHORT - CIRCUIT.
4. USE 1/2" DIA. HILTI KB-TZ ANCHORS, IN 3000 PSI. HARDROCK CONCRETE, 2-3/8" NOMINAL EMBEDMENT, 4" CONCRETE THICKNESS & 5" EDGE DISTANCE. INSTALL ANCHORS WITH SPECIAL INSPECTION PER ICC ESR 1917.

11 P-3, P-4, P-5 & P-6 FRAME (BY MANUFACTURER)
N.T.S.

MARK	MAKE	MODEL	SIZE	STEEL FRAME
P-1,2	B & G	1510	3AD, 25HP (256T)	W6 X 9

RESTRAINTS ARE O.S.H.P.D.
PRE-APPROVED No. OPA 0437
VIBREX TYPE: S/R 3200

ALLOWABLE LOADS:
P SIDE = 650 LBS.
P THRUST = 650 LBS.
P UPLIFT = 650 LBS.

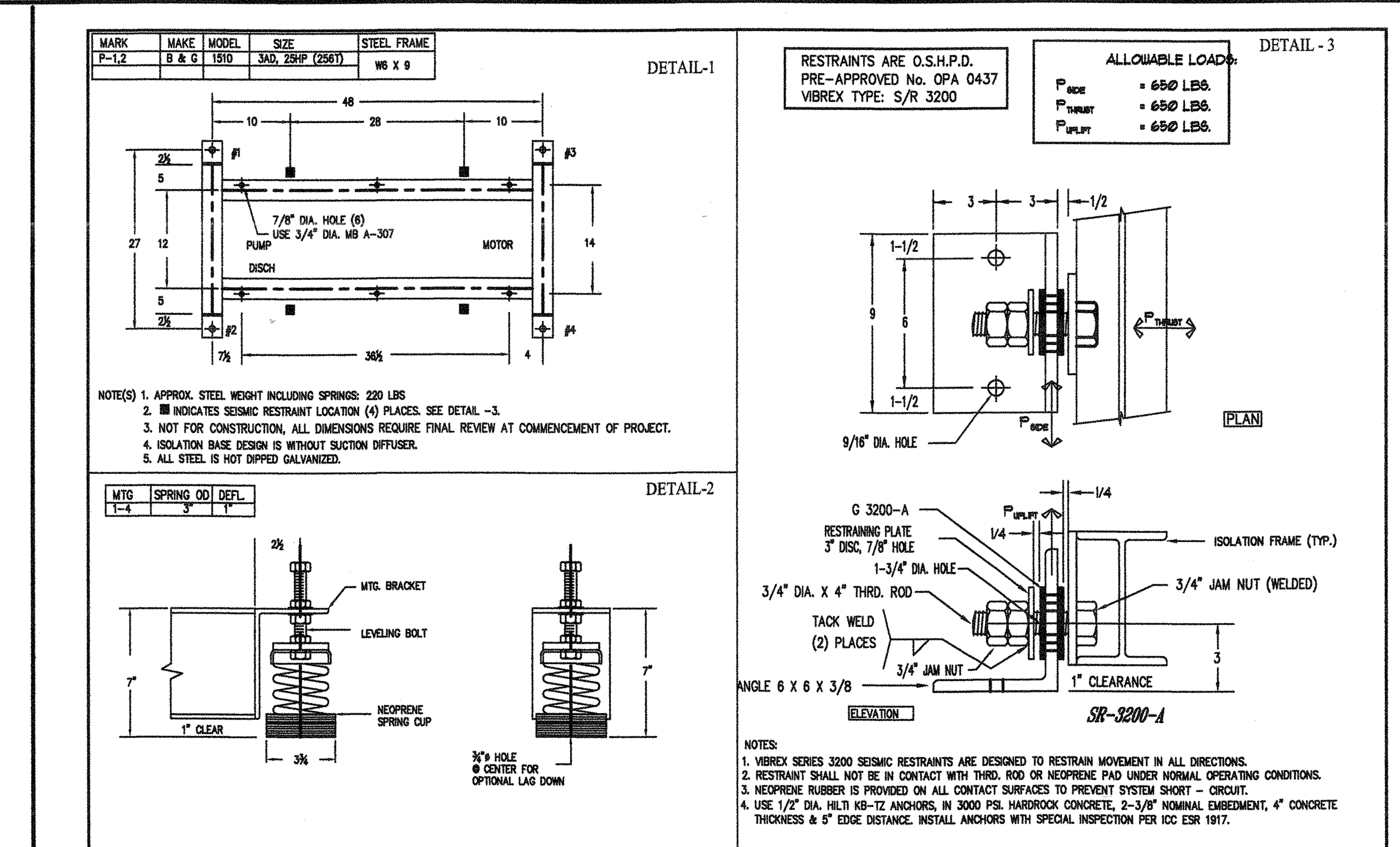

NOTE(S) 1. APPROX. STEEL WEIGHT INCLUDING SPRINGS: 220 LBS
2. ■ INDICATES SEISMIC RESTRAINT LOCATION (4) PLACES. SEE DETAIL -3.
3. NOT FOR CONSTRUCTION, ALL DIMENSIONS REQUIRE FINAL REVIEW AT COMMENCEMENT OF PROJECT.
4. ISOLATION BASE DESIGN IS WITHOUT SUCTION DIFFUSER.
5. ALL STEEL IS HOT DIPPED GALVANIZED.

MTG	SPRING OD	DEFL.
1-4	3"	1"

NOTES:
1. VIBREX SERIES 3200 SEISMIC RESTRAINTS ARE DESIGNED TO RESTRAIN MOVEMENT IN ALL DIRECTIONS.
2. RESTRAINT SHALL NOT BE IN CONTACT WITH THRD. ROD OR NEOPRENE PAD UNDER NORMAL OPERATING CONDITIONS.
3. NEOPRENE RUBBER IS PROVIDED ON ALL CONTACT SURFACES TO PREVENT SYSTEM SHORT - CIRCUIT.
4. USE 1/2" DIA. HILTI KB-TZ ANCHORS, IN 3000 PSI. HARDROCK CONCRETE, 2-3/8" NOMINAL EMBEDMENT, 4" CONCRETE THICKNESS & 5" EDGE DISTANCE. INSTALL ANCHORS WITH SPECIAL INSPECTION PER ICC ESR 1917.

12 P-1 & P-2 FRAME (BY MANUFACTURER)
N.T.S.

MARK	MAKE	MODEL	SIZE	STEEL FRAME
P-7,8	B & G	1510	3AD, 25HP (284T)	W6 X 9

RESTRAINTS ARE O.S.H.P.D.
PRE-APPROVED No. OPA 0437
VIBREX TYPE: S/R 3200

ALLOWABLE LOADS:
P SIDE = 3300 LBS.
P THRUST = 3300 LBS.
P UPLIFT = 3300 LBS.

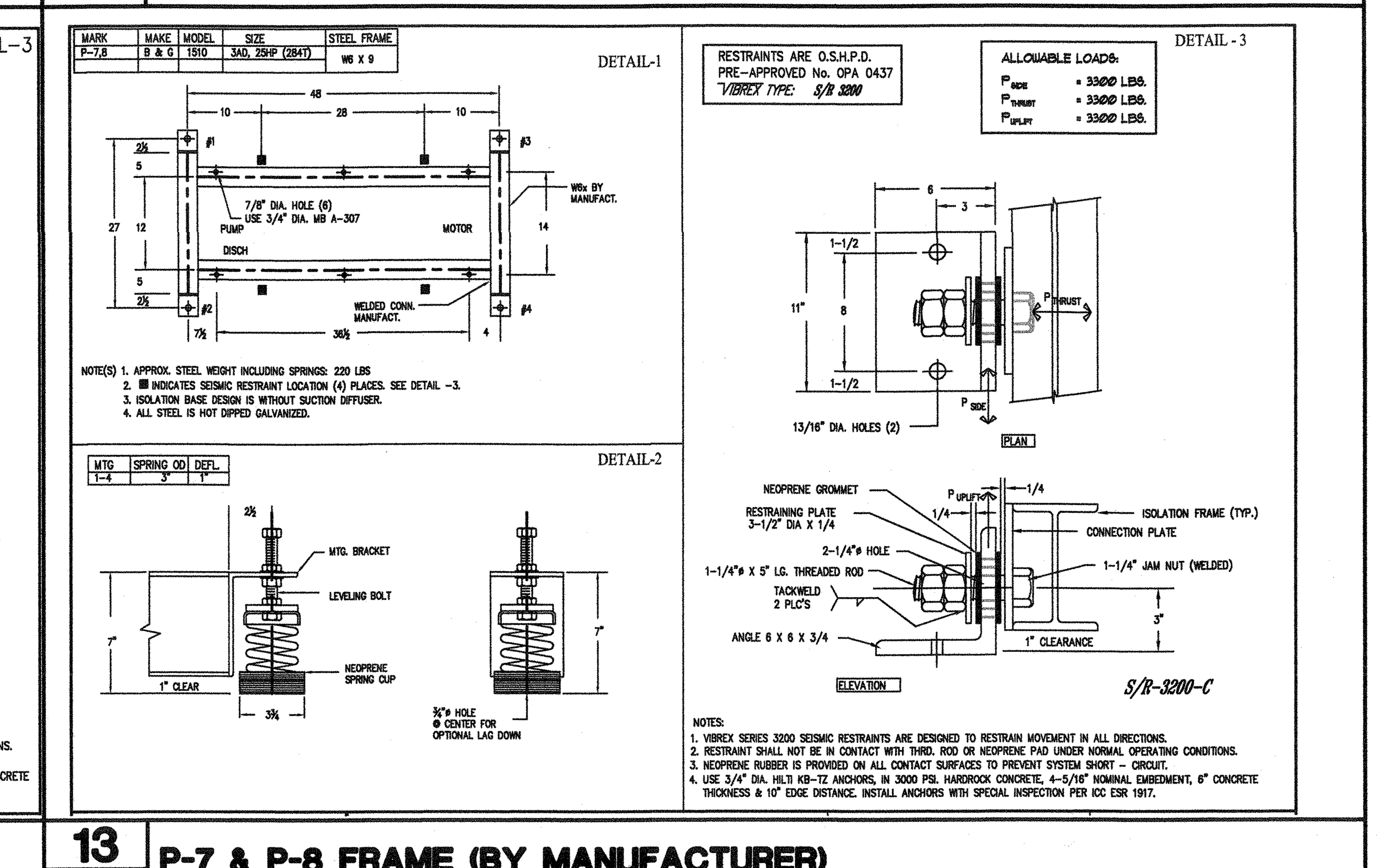

NOTE(S) 1. APPROX. STEEL WEIGHT INCLUDING SPRINGS: 220 LBS
2. ■ INDICATES SEISMIC RESTRAINT LOCATION (4) PLACES. SEE DETAIL -3.
3. ISOLATION BASE DESIGN IS WITHOUT SUCTION DIFFUSER.
4. ALL STEEL IS HOT DIPPED GALVANIZED.

MTG	SPRING OD	DEFL.
1-4	3"	1"

NOTES:
1. VIBREX SERIES 3200 SEISMIC RESTRAINTS ARE DESIGNED TO RESTRAIN MOVEMENT IN ALL DIRECTIONS.
2. RESTRAINT SHALL NOT BE IN CONTACT WITH THRD. ROD OR NEOPRENE PAD UNDER NORMAL OPERATING CONDITIONS.
3. NEOPRENE RUBBER IS PROVIDED ON ALL CONTACT SURFACES TO PREVENT SYSTEM SHORT - CIRCUIT.
4. USE 3/4" DIA. HILTI KB-TZ ANCHORS, IN 3000 PSI. HARDROCK CONCRETE, 4-5/16" NOMINAL EMBEDMENT, 6" CONCRETE THICKNESS & 10" EDGE DISTANCE. INSTALL ANCHORS WITH SPECIAL INSPECTION PER ICC ESR 1917.

13 P-7 & P-8 FRAME (BY MANUFACTURER)
N.T.S.

J & S CONSULTING ENGINEERS, INC.
ELECTRICAL - MECHANICAL
FIRE PROTECTION
3111 Winona Ave., #102
Burbank, Ca 91504
Tel.: (818) 841-0303
Fax: (818) 841-8531
470 Helga Ct. Unit A
Newbury Park, Ca. 91320
Tel. (818) 398-5793
Fax: (818) 841-8531
www.jandsconsulting.com
E-Mail: jsmail@jandsconsulting.com
PROJECT No. 45461

LICENSED ARCHITECT JEAN ANN AMADOR C-22205 APRIL 30, 2019 RENEWAL DATE STATE OF CALIFORNIA

REGISTERED PROFESSIONAL ENGINEER ARNEL B. DE SILVA No. M22816 EXPIRES 09-30-18 MECHANICAL STATE OF CALIFORNIA

VENTURA COLLEGE
4667 TELEGRAPH ROAD, VENTURA, CALIFORNIA, 93003
VENTURA COUNTY COMMUNITY COLLEGE DISTRICT
MATH & SCIENCE COMPLEX

IDENTIFICATION STAMP
DIV. OF THE STATE ARCHITECT
OFFICE OF REGULATION SERVICES
APPL. 03- 117754
AC — FLS — SS
DATE JUL 05 2017

NO.	DATE	DESCRIPTION	BY
	12.19.16	DSA SUBMITTAL	

REVISIONS

DRAWN BY: S.L.
CHECKED BY: A.D.S.
DATE 05.12.17
JOB NO: 45461
SHEET TITLE
MECHANICAL EQUIPMENT SUPPORT DETAILS

SHEET
M-8.1
DWG # 58 OF 82

Job No. 45461; FILE: N:\45461-VenturaColl\M8-1.dwg; Layout1 Plot Date: 05-11-17, 12:35pm; Plot scale: 1=1-PS By: S.L. Prev. plot: 05-11-17, 10:49am
05-12-17 DSA SUBMITTAL

MARK	MAKE	MODEL
FC-1,2,3,4	TRANE	FCCB04
FC-6	TRANE	FCCB02

MTS	SPRING O.D.	DEFL
1-4	2.0"	1"

NOTE: 1. MAX. 1/2" DIA. ROD AND HARDWARE BY OTHERS.

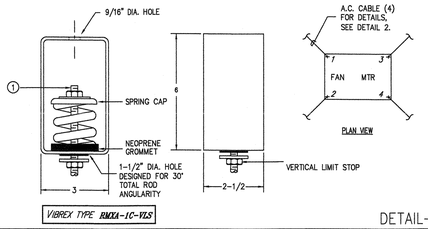

VIBREX TYPE RMXA-1C-VLS

DETAIL-1

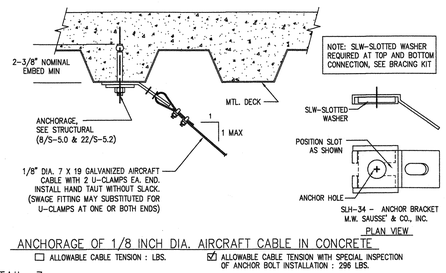

ANCHORAGE OF 1/8 INCH DIA. AIRCRAFT CABLE IN CONCRETE

☐ ALLOWABLE CABLE TENSION : LBS. ☑ ALLOWABLE CABLE TENSION WITH SPECIAL INSPECTION OF ANCHOR BOLT INSTALLATION : 296 LBS.

DETAIL-3

TYPICAL EQUIPMENT CABLE BRACING SYSTEM

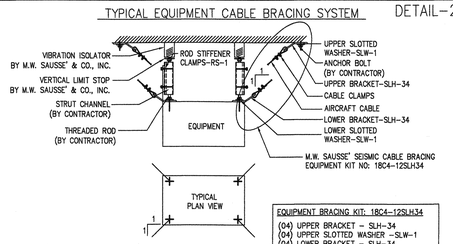

NOTE: 1) CABLE IS 7 X 19 GALVANIZED AIRCRAFT CABLE.
2) CABLES TO BE INSTALLED HAND TAUT W/O SLACK.
3) FOR CABLE ANCHORAGE, SEE DETAIL - 3
4) ROD STIFFENER MAY BE REQUIRED. SEE DETAIL - 4

EQUIPMENT BRACING KIT: 18C4-12SLH34
(04) UPPER BRACKET - SLH-34
(04) UPPER SLOTTED WASHER - SLW-1
(04) LOWER BRACKET - SLH-34
(04) LOWER SLOTTED WASHER - SLW-1
(08) ROD STIFFENER CLAMPS - RS-1
(04) CABLE - 1/8" - 10 FT.
(16) CABLE CLAMPS - 1/8"

DETAIL-2

DETAIL-4

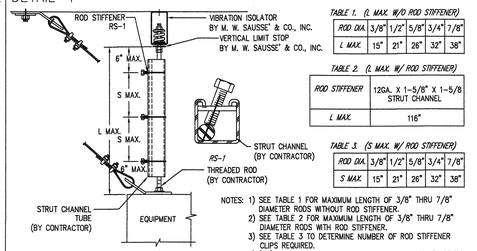

TABLE 1. (L MAX. W/O ROD STIFFENER)

ROD DIA.	3/8"	1/2"	5/8"	3/4"	7/8"
L MAX.	15"	21"	26"	32"	38"

TABLE 2. (L MAX. W/ ROD STIFFENER)

ROD STIFFENER	12GA. X 1-5/8" X 1-5/8 STRUT CHANNEL
L MAX.	116"

TABLE 3. (S MAX. W/ ROD STIFFENER)

ROD DIA.	3/8"	1/2"	5/8"	3/4"	7/8"
S MAX.	15"	21"	26"	32"	38"

NOTES: 1) SEE TABLE 1 FOR MAXIMUM LENGTH OF 3/8" THRU 7/8" DIAMETER RODS WITHOUT ROD STIFFENER.
2) SEE TABLE 2 FOR MAXIMUM LENGTH OF 3/8" THRU 7/8" DIAMETER RODS WITH ROD STIFFENER.
3) SEE TABLE 3 TO DETERMINE NUMBER OF ROD STIFFENER CLIPS REQUIRED.
4) (08) ROD STIFFENER CLAMPS PROVIDED IN A KIT. IF ADDITIONAL CLIPS ARE REQUIRED, CONTACT M. W. SAUSSE' & CO., INC.

RS-1 - ROD STIFFENER REQUIREMENTS FOR EQUIPMENT CABLE BRACING

1 FC-1, 2, 3, 4 & 6 SUPPORT MOUNTING DETAIL N.T.S.

MARK	MAKE	MODEL
FC-7A	TRANE	GAM5A0A18

MTS	SPRING O.D.	DEFL
1-4	2"	1"

NOTE: 1. MAX. 1/2" DIA. ROD AND HARDWARE BY CONTRACTOR

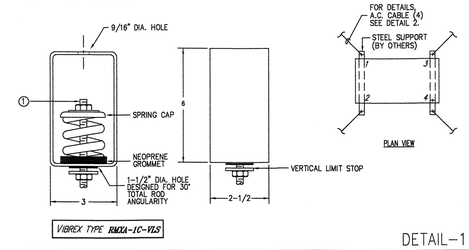

VIBREX TYPE RMXA-1C-VLS

DETAIL-1

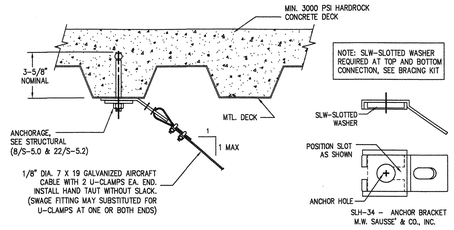

ANCHORAGE OF 1/8 INCH DIA. AIRCRAFT CABLE IN HARDROCK CONCRETE

☐ ALLOWABLE CABLE TENSION : ☑ ALLOWABLE CABLE TENSION WITH SPECIAL INSPECTION OF ANCHOR BOLT INSTALLATION : 425 LBS.

DETAIL-3

DETAIL-2

TYPICAL EQUIPMENT CABLE BRACING SYSTEM

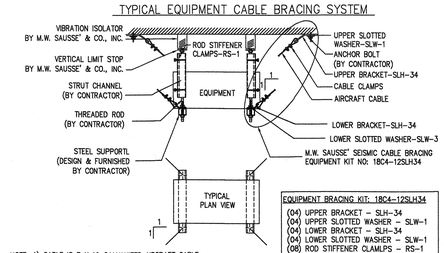

NOTE: 1) CABLE IS 7 X 19 GALVANIZED AIRCRAFT CABLE.
2) CABLES TO BE INSTALLED HAND TAUT W/O SLACK.
3) FOR CABLE ANCHORAGE, SEE DETAIL - 3.
4) ROD STIFFENER MAY BE REQUIRED. SEE DETAILS - 4.

EQUIPMENT BRACING KIT: 18C4-12SLH34
(04) UPPER BRACKET - SLH-34
(04) UPPER SLOTTED WASHER - SLW-1
(04) LOWER BRACKET - SLH-34
(04) LOWER SLOTTED WASHER - SLW-1
(08) ROD STIFFENER CLAMPS - RS-1
(04) CABLE - 1/8" - 10 FT.
(16) CABLE CLAMPS - 1/8"

DETAIL-4

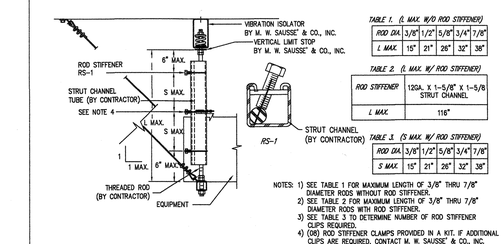

TABLE 1. (L MAX. W/O ROD STIFFENER)

ROD DIA.	3/8"	1/2"	5/8"	3/4"	7/8"
L MAX.	15"	21"	26"	32"	38"

TABLE 2. (L MAX. W/ ROD STIFFENER)

ROD STIFFENER	12GA. X 1-5/8" X 1-5/8 STRUT CHANNEL
L MAX.	116"

TABLE 3. (S MAX. W/ ROD STIFFENER)

ROD DIA.	3/8"	1/2"	5/8"	3/4"	7/8"
S MAX.	15"	21"	26"	32"	38"

NOTES: 1) SEE TABLE 1 FOR MAXIMUM LENGTH OF 3/8" THRU 7/8" DIAMETER RODS WITHOUT ROD STIFFENER.
2) SEE TABLE 2 FOR MAXIMUM LENGTH OF 3/8" THRU 7/8" DIAMETER RODS WITH ROD STIFFENER.
3) SEE TABLE 3 TO DETERMINE NUMBER OF ROD STIFFENER CLIPS REQUIRED.
4) (08) ROD STIFFENER CLAMPS PROVIDED IN A KIT. IF ADDITIONAL CLIPS ARE REQUIRED, CONTACT M. W. SAUSSE' & CO., INC.

RS-1 - ROD STIFFENER REQUIREMENTS FOR EQUIPMENT CABLE BRACING

2 FC-7A SUPPORT MOUNTING DETAIL N.T.S.

MARK	MAKE	MODEL	STEEL SIZE
CU-7A	TRANE	4TWR4018	L3 X 2 X 1/4

DETAIL-1

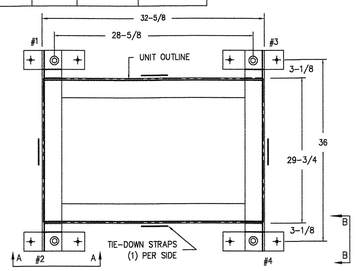

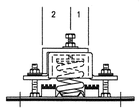

VIEW A-A

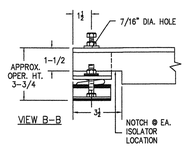

VIEW B-B

NOTES:
1. APPROX. STEEL WEIGHT INCLUDING ISOLATORS.: 90 LBS.
2. ISOLATORS ARE OSHPD PRE-APPROVED #OPA-0098. SEE DETAIL 2.
3. —— INDICATES TIE-DOWN STRAP. SEE DETAIL 2

DETAIL-2

ISOLATORS ARE O.S.H.P.D. PRE-APPROVED No. OPA-0098

MTS	SPRING O.D.	DEFL
1-4	2"	1"

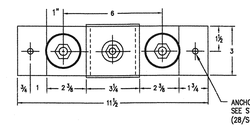

RMU-EQ-SH-1

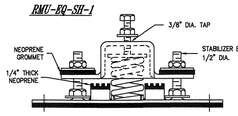

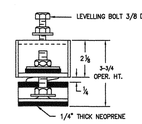

MAX. ALLOW. LOADS: HORIZ. 1100 lbs. VERT. (UP) 1400 lbs.

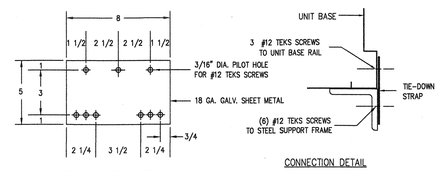

TIE DOWN STRAP DETAIL

CONNECTION DETAIL

3 CU-7A SUPPORT FRAME (BY MANUFACTURER) N.T.S.

DETAIL-1

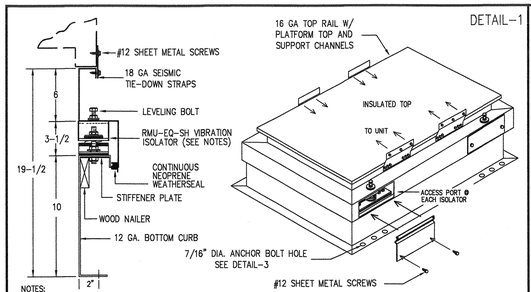

NOTES:
1. FOR ANCHOR REQUIREMENTS AND DETAILS OF ISOLATORS AND SEISMIC STRAPS, SEE DETAIL 2, 3.
2. ROOF CURBS ARE PITCHED ROOF CURBS TO MATCH ROOF SLOPE.

DETAIL-2

NOTES: 1) ALL DIMENSIONS IN INCHES
2) SPRING DEFLECTION = 1"

ISOLATORS ARE O.S.H.P.D. PRE-APPROVED No. OPA-0098

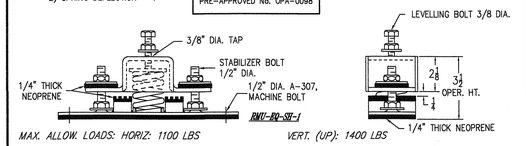

MAX. ALLOW. LOADS: HORIZ: 1100 LBS VERT. (UP): 1400 LBS

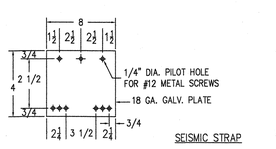

SEISMIC STRAP

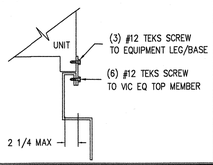

DETAIL-3

NOTES:
1) — INDICATES SEISMIC TIE-DOWN PLATE. (10) REQUIRED AS SHOWN, SEE DETAIL 2.
2) #1 THRU # 10 INDICATE ISOLATOR LOCATIONS. SEE DETAIL 2.

MARK	MAKE	MODEL	CURB WT
ERV-4A	TRANE	EVEBEE40	435 #

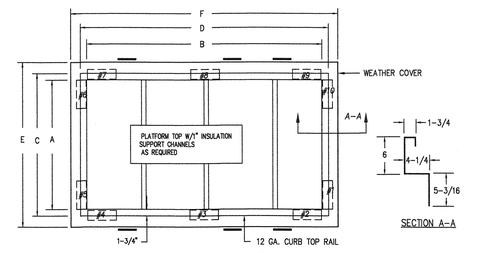

TOP SECTION PLAN VIEW

A	B	C	D	E	F	G	H	I	J	K	L	M
46-1/8	51-1/2	55	49-5/8	54-5/8	60	52-1/8	57-1/2	3	3	6	----	50-1/8

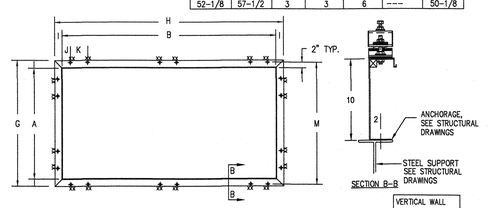

BOTTOM SECTION FOOTPRINT

NOTES:
1. FOR ANCHORAGE, WELD BOTTOM FLANGE OF ROOFCURB TO STRUCTURAL STEEL SUPPORT, 1/8" WELD 2" LONG, (2) PLCS. AT EACH ISOLATOR LOCATION, 6" APART.
2. FOR ANCHORAGE, SEE STRUCTURAL DRAWINGS (2/S-5.0).

4 ERV-4A SUPPORT CURB (BY MANUFACTURER) N.T.S.

J & S CONSULTING ENGINEERS, INC.
ELECTRICAL ▫ MECHANICAL
FIRE PROTECTION
3111 Winona Ave., #102
Burbank, Ca 91504
Tel.: (818) 841-0303
Fax: (818) 841-8531
470 Helga Ct. Unit A
Newbury Park, Ca. 91320
Tel. (818) 398-5793
Fax: (818) 841-8531
www.jandsconsulting.com
E-Mail: jsmail@jandsconsulting.com

PROJECT No. 45461

LICENSED ARCHITECT JEANNINE A. SAUSSE C-22205 APRIL 30, 2019 RENEWAL DATE STATE OF CALIFORNIA

REGISTERED PROFESSIONAL ENGINEER JEANNE B. DE SAUSSE No. M22816 EXPIRES 09-30-18 MECHANICAL STATE OF CALIFORNIA

VENTURA COLLEGE

4667 TELEGRAPH ROAD, VENTURA, CALIFORNIA, 93003
VENTURA COUNTY COMMUNITY COLLEGE DISTRICT
MATH & SCIENCE COMPLEX

IDENTIFICATION STAMP
DIV. OF THE STATE ARCHITECT
OFFICE OF REGULATION SERVICES
APPL. 03- 117754
AC FLS SS
DATE JUL 05 2017

NO.	DATE	DESCRIPTION	BY
	12.19.16	DSA SUBMITTAL	

REVISIONS

DRAWN BY: S.L.
CHECKED BY: A.D.S.
DATE 05.12.17
JOB NO: 45461

SHEET TITLE

MECHANICAL EQUIPMENT SUPPORT DETAILS

SHEET

M-8.2

DWG # 54 OF 82

5 05-12-17 DSA SUBMITTAL

Job No. 45461, FILE: V:\45461-Ventura\Civil\MB-2.dwg, Layout1, Ref. dwg: V:\45461-Ventura\Arch\18 - FC-1,2,3,4,6.dwg, V:\45461-Ventura\Arch\18 - FC-7A, 18A 478N0218.dwg, V:\45461-Ventura\Arch\10 - FC-7A, 18A CBK SEQ4.dwg, SHEET.dwg
Date: 05-11-17, 12:58pm, Plot scale: 1=1.0 Sq. Ft., Plot: 36x51.71, 12:58pm

NOTES:
1. FOR ANCHOR REQUIREMENTS AND DETAILS OF ISOLATORS AND SEISMIC STRAPS, SEE ADDITIONAL DWGS.
2. ROOF CURBS ARE PITCHED ROOF CURBS TO MATCH ROOF SLOPE.
3. APPROXIMATE ISOLATION ROOF CURB WEIGHT = 1900 LBS.

DETAIL – 1

STATIC DEFLECTION: 2.0"

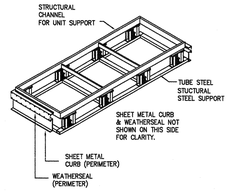

DETAIL – 2

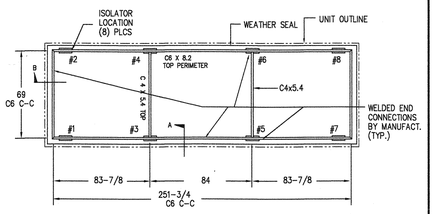

NOTES:
1. FOR ATTACHMENT OF UNIT TO ROOF CURB, SEE ATTACHED DRAWING.

LAYOUT – TOP

MOUNT#	SPRING	O.D.	LOAD	DEFL.
1–8	––	4.0"	–––	2"

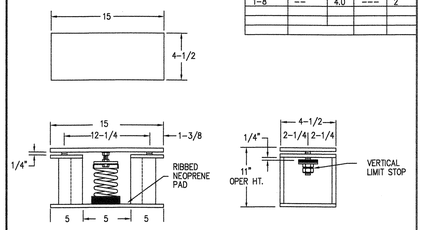

DETAIL – 3

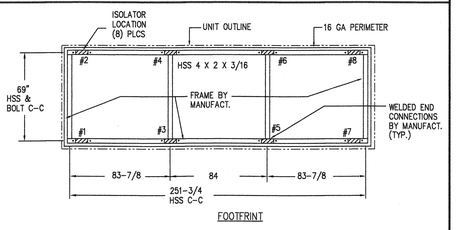

FOOTPRINT

1. FOR ANCHOR BOLT, USE 1/2" DIA. MACHINE BOLTS, A-307
2. ADEQUACY OF STEEL SUPPORTS TO BE VERIFIED BY OTHERS.

DETAIL – 4

TRANE CSAA 17

1 N.T.S. **EMAU-1, 3, 8, 9 SUPPORT CURB (BY MANUFACTURER)**

NOTES:
1. ROOF CURBS ARE PITCHED ROOF CURBS TO MATCH ROOF SLOPE.
2. APPROXIMATE ISOLATION ROOF CURB WEIGHT = 1300 LBS.

DETAIL – 1

STATIC DEFLECTION: 2.0"

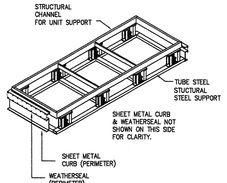

DETAIL – 2

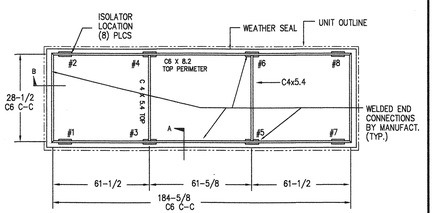

NOTES:
1. FOR ATTACHMENT OF UNIT TO ROOF CURB, SEE ATTACHED DRAWING.

LAYOUT – TOP

MOUNT#	SPRING	O.D.	LOAD	DEFL.
1–8	––	4.0"	–––	2"

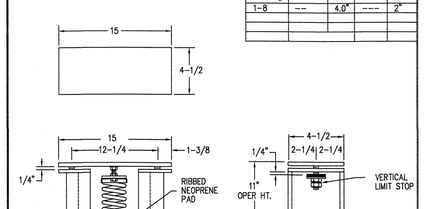

DETAIL – 3

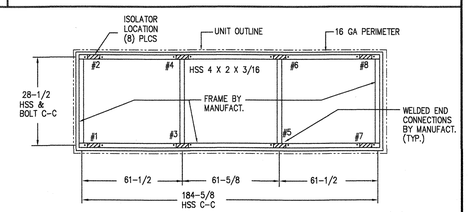

FOOTPRINT

1. FOR ANCHOR BOLT, USE 1/2" DIA. MACHINE BOLTS, A-307

DETAIL – 4

TRANE MCC 3

2 N.T.S. **EMAU-5, 6, 7 & 14 SUPPORT CURB (BY MANUFACTURER)**

NOTES:
1. ROOF CURBS ARE PITCHED ROOF CURBS TO MATCH ROOF SLOPE.
2. APPROXIMATE ISOLATION ROOF CURB WEIGHT = 1400 LBS.

DETAIL – 1

STATIC DEFLECTION: 2.0"

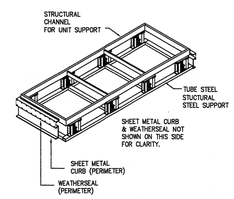

DETAIL – 2

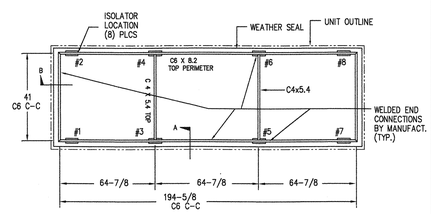

NOTES:
1. FOR ATTACHMENT OF UNIT TO ROOF CURB, SEE ATTACHED DRAWING.

LAYOUT – TOP

MOUNT#	SPRING	O.D.	LOAD	DEFL.
1–8	––	4.0"	–––	2"

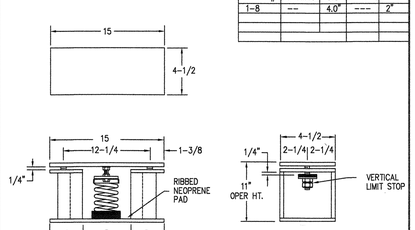

DETAIL – 3

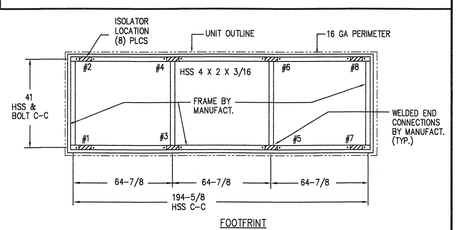

FOOTPRINT

1. FOR ANCHOR BOLT, USE 1/2" DIA. MACHINE BOLTS, A-307

DETAIL – 4

TRANE MCC 4

3 N.T.S. **EMAU-13 SUPPORT CURB (BY MANUFACTURER)**

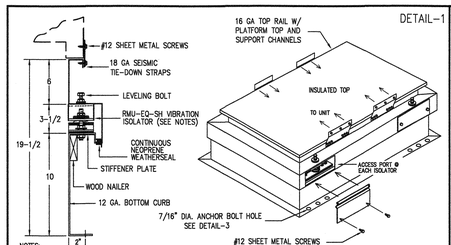

DETAIL-1

NOTES:
1. FOR ANCHOR REQUIREMENTS AND DETAILS OF ISOLATORS AND SEISMIC STRAPS, SEE DETAIL 2, 3.
2. ROOF CURBS ARE PITCHED ROOF CURBS TO MATCH ROOF SLOPE.

NOTES: 1) ALL DIMENSIONS IN INCHES
2) SPRING DEFLECTION = 1"

ISOLATORS ARE O.S.H.P.D. PRE-APPROVED No. OPA-0098

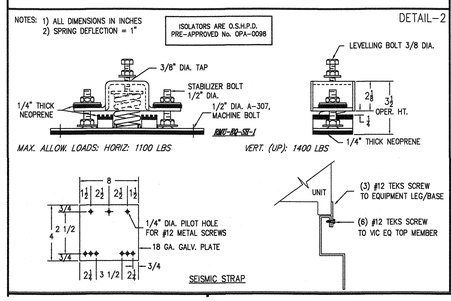

DETAIL-2

NOTES:
1) — INDICATES SEISMIC TIE-DOWN PLATE. (10) REQUIRED AS SOWN, SEE DETAIL 2.
2) #1 THRU # 10 INDICATE ISOLATOR LOCATIONS. SEE DETAIL 2.

DETAIL-3

MARK	MAKE	MODEL	CURB WT
ERV-1A,2A,3A	TRANE	EVHBFFH1440	465 #

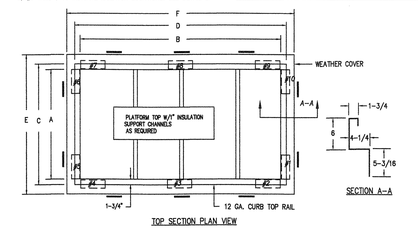

A	B	C	D	E	F						
49-1/2	64	53	67-1/2	58	72-1/2						
					G	H	I	J	K	L	M
					55-1/2	70	3	3	6	----	53-1/2

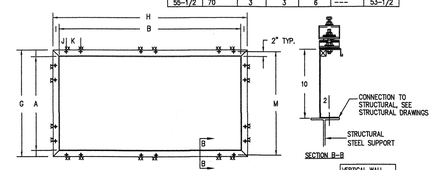

NOTES:
1. FOR ANCHORAGE, WELD BOTTOM FLANGE OF ROOFCURB TO STRUCTURAL STEEL SUPPORT, 1/8" WELD 2" LONG, (2) PLCS. AT EACH ISOLATOR LOCATION, 6" APART.
2. FOR ANCHORAGE,SEE STRUCTURAL DRAWINGS (2/S-5.0).

4 N.T.S. **ERV-1A, 2A, 3A SUPPORT CURB (BY MANUFACTURER)**

J & S CONSULTING ENGINEERS, INC.
ELECTRICAL • MECHANICAL
FIRE PROTECTION
3111 Winona Ave., #102
Burbank, Ca 91504
Tel.: (818) 841-0303
Fax: (818) 841-8531
470 Helga Ct. Unit A
Newbury Park, Ca. 91320
Tel. (818) 398-5793
Fax: (818) 841-8531
www.jandsconsulting.com
E-Mail: jsmail@jandsconsulting.com

PROJECT No. 45461

LICENSED ARCHITECT DANIEL B. DE SILVA C-22205 APRIL 30, 2019 RENEWAL DATE STATE OF CALIFORNIA

REGISTERED PROFESSIONAL ENGINEER DANIEL B. DE SILVA No. M22816 EXPIRES 09-30-18 MECHANICAL STATE OF CALIFORNIA

VENTURA COLLEGE

4667 TELEGRAPH ROAD, VENTURA, CALIFORNIA, 93003
VENTURA COUNTY COMMUNITY COLLEGE DISTRICT

MATH & SCIENCE COMPLEX

IDENTIFICATION STAMP
DIV. OF THE STATE ARCHITECT
OFFICE OF REGULATION SERVICES
APPL. 03- 117754
AC FLS SS
DATE JUL 05 2017

NO.	DATE	DESCRIPTION	BY
	12.19.16	DSA SUBMITTAL	

REVISIONS

DRAWN BY: S.L.
CHECKED BY: A.D.S.
DATE 05.12.17
JOB NO: 45461

SHEET TITLE

MECHANICAL EQUIPMENT SUPPORT DETAILS

SHEET

M-8.3

DWG # 60 OF 82

05-12-17 DSA SUBMITTAL

Job No. 45461 - FILE: N:\45461-VenturaCol\Mat\Jobfile\Mech\17x- ERV-1A,2A,3A.dwg, N:\45461-VenturaCol\Mech\17x- ERV-1A,2A,3A.dwg, Apr. Plotted: N:\45461-VenturaCol\Mech\17 - MAU-3,8,9 & GSAA 17.dwg, N:\45461-VenturaCol\Mech\17 - MAU-3,8,9 & GSAA 17.dwg, N:\45461-VenturaCol\Mech\17 - MAU-13 SIZE 24.dwg, N:\45461-VenturaCol\Mech\17 - MAU-13 SIZE 24.dwg, N:\45461-VenturaCol\Mech\17 - MAU-13 SIZE 24.dwg, SHEET.dwg
05, 2017 - 11:17:42am by Ed Thew, pen set: 11x17 - 100dpi

Project Name:	Math & Science Complex - Ventura College Bldg A	NRCC-PRF-01-E	Page 1 of 20
Project Address:	4667 Telegraph Road, Ventura 93003	Calculation Date/Time:	15:40, Thu, Jul 07, 2016
Compliance Scope:	ExistingAlteration	Input File Name:	Ventura College Bldg A 07072016.xml

A. PROJECT GENERAL INFORMATION

1.	Project Location (city)	Ventura	7.	# of dwelling units	0
2.	CA Zip Code	93003	8.	Standards Version	Compliance2015
3.	Climate Zone	6	9.	Compliance Software (version)	EnergyPro 6.7
4.	Total Conditioned Floor Area	6,688 ft²	10.	Building Orientation (deg)	(E) 90 deg
5.	Total Unconditioned Floor Area	0 ft²	11.	Permitted Scope of Work	ExistingAlteration
6.	# of Stories (Habitable Above Grade)	2	12	Building Type(s)	Nonresidential

B. COMPLIANCE RESULTS FOR PERFORMANCE COMPONENTS (Annual TDV Energy Use, kBtu/ft ²-yr) § 140.1

BUILDING COMPLIES

1. Energy Component	2. Standard Design (TDV)	3. Proposed Design (TDV)	4. Compliance Margin (TDV)	5. Percent Better than Standard
Space Heating	9.9	3.6	6.3	63.6%
Space Cooling	63.1	38.3	24.8	39.3%
Indoor Fans	37.8	13.8	24.0	63.5%
Heat Rejection	--	--	--	--
Pumps & Misc.	1.6	--	1.6	--
Domestic Hot Water	--	--	--	--
Indoor Lighting	60.5	60.5	--	0.0%
COMPLIANCE TOTAL	**172.9**	**116.2**	**56.7**	**32.8%**
Receptacle	71.3	71.3	0.0	0.0%
Process	--	--	--	--
Process Ltg	--	--	--	--
TOTAL	**244.2**	**187.5**	**56.7**	23.2%

Project Name:	Math & Science Complex - Ventura College Bldg A	NRCC-PRF-01-E	Page 2 of 20
Project Address:	4667 Telegraph Road, Ventura 93003	Calculation Date/Time:	15:40, Thu, Jul 07, 2016
Compliance Scope:	ExistingAlteration	Input File Name:	Ventura College Bldg A 07072016.xml

C. PRIORITY PLAN CHECK/ INSPECTION ITEMS (in order of highest to lowest TDV energy savings)

1st	Space Cooling: Check envelope and mechanical
2nd	Indoor Fans: Check envelope and mechanical
3rd	Space Heating: Check envelope and mechanical
4th	Pumps & Misc.: Check mechanical
5th	Heat Rejection: Check envelope and mechanical
6th	Domestic Hot Water: Check mechanical
7th	Indoor Lighting: Check lighting

Compliance Margin By Energy Component (from Table B column 4)

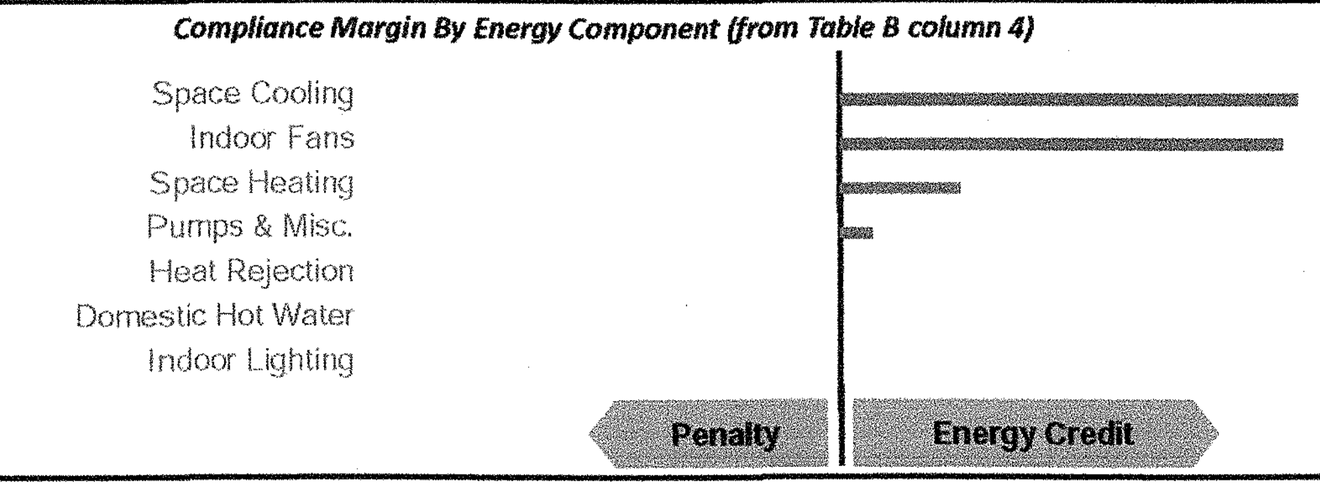

D. EXCEPTIONAL CONDITIONS

The building does not include service water heating. Verify that service water heating is not required and is not included in the design.

E. HERS VERIFICATION

This Section Does Not Apply

F. ADDITIONAL REMARKS

None Provided

Project Name:	Math & Science Complex - Ventura College Bldg A	NRCC-PRF-01-E	Page 3 of 20
Project Address:	4667 Telegraph Road, Ventura 93003	Calculation Date/Time:	15:40, Thu, Jul 07, 2016
Compliance Scope:	ExistingAlteration	Input File Name:	Ventura College Bldg A 07072016.xml

G. COMPLIANCE PATH & CERTIFICATE OF COMPLIANCE SUMMARY

Identify which building components use the performance or prescriptive path for compliance. "NA"= not in project

For components that utilize the performance path, indicate the sheet number that includes mandatory notes on plans.

Building Component	Compliance Path	Compliance Forms *(required for submittal)*	Location of Mandatory Notes on Plans
Envelope	☒ Performance	NRCC-PRF-ENV-DETAILS (section of the NRCC-PRF-01-E)	
	☐ Prescriptive	NRCC-ENV-01 / 02 / 03 / 04 / 05 / 06-E	
	☐ NA		
Mechanical	☒ Performance	NRCC-PRF-MCH-DETAILS (section of the NRCC-PRF-01-E)	
	☐ Prescriptive	NRCC-MCH-01 / 02 / 03 / 04 / 05 / 06 / 07-E	
	☐ NA		
Domestic Hot Water	☐ Performance	NRCC-PRF-PLB-DETAILS (section of the NRCC-PRF-01-E)	
	☐ Prescriptive	NRCC-PLB-01-E	
	☒ NA		
Lighting (Indoor Conditioned)	☐ Performance	NRCC-PRF-LTI-DETAILS (section of the NRCC-PRF-01-E)	
	☐ Prescriptive	NRCC-LTI-01 / 02 / 03 / 04 / 05-E	
	☒ NA		
Covered Process: Commercial Kitchens	☐ Performance	S2 (section of the NRCC-PRF-01-E)	
	☐ Prescriptive	NRCC-PRC-01/ 03-E	
	☒ NA		
Covered Process: Computer Rooms	☐ Performance	S3 (section of the NRCC-PRF-01-E)	
	☐ Prescriptive	NRCC-PRC-01/ 04-E	
	☒ NA		
Covered Process: Laboratory Exhaust	☐ Performance	S4 (section of the NRCC-PRF-01-E)	
	☐ Prescriptive	NRCC-PRC-01/ 09-E	
	☒ NA		

Project Name:	Math & Science Complex - Ventura College Bldg A	NRCC-PRF-01-E	Page 4 of 20
Project Address:	4667 Telegraph Road, Ventura 93003	Calculation Date/Time:	15:40, Thu, Jul 07, 2016
Compliance Scope:	ExistingAlteration	Input File Name:	Ventura College Bldg A 07072016.xml

G. COMPLIANCE PATH & CERTIFICATE OF COMPLIANCE SUMMARY

The following building components are only eligible for prescriptive compliance. Indicate which are relevant to the project.				*The following building components may have mandatory requirements per Part 6. Indicate which are relevant to the project.*			
Yes	**NA**	**Prescriptive Requirement**	**Compliance Forms**	**Yes**	**NA**	**Mandatory Requirement**	**Compliance Forms**
☐	☒	Lighting (Indoor Unconditioned) §140.6	NRCC-LTI-01 / 02 / 03 / 04 / 05-E	☐ ☐	☒ ☒	Commissioning: §120.8 Simple Systems Complex Systems	NRCC-CXR-01 / 02 / 03 / 05-E NRCC-CXR-01 / 02 / 04 / 05-E
☐	☒	Lighting (Outdoor) §140.7	NRCC-LTO-01 / 02 / 03-E	☐	☒	Electrical: §130.5	NRCC-ELC-01-E
☐	☒	Lighting (Sign) §140.8	NRCC-LTS-01-E	☐	☒	Solar Ready: §110.10	NRCC-SRA-01 / 02-E
☐	☒	Solar Thermal Water Heating: §140.5	NRCC-STH-01-E	☐ ☐ ☐ ☐ ☐ ☐	☒ ☒ ☒ ☒ ☒ ☒	Covered Process: §120.6 Parking Garage Commercial Refrigeration Warehouse Refrigeration Compressed Air Process Boilers	NRCC-PRC-01-E NRCC-PRC-02-E NRCC-PRC-05-E NRCC-PRC-06/07/08-E NRCC-PRC-10-E NRCC-PRC-11-E

Project Name:	Math & Science Complex - Ventura College Bldg A	NRCC-PRF-01-E	Page 5 of 20
Project Address:	4667 Telegraph Road, Ventura 93003	Calculation Date/Time:	15:40, Thu, Jul 07, 2016
Compliance Scope:	ExistingAlteration	Input File Name:	Ventura College Bldg A 07072016.xml

H. CERTIFICATE OF INSTALLATION, CERTIFICATE OF ACCEPTANCE & CERTIFICATE OF VERIFICATION SUMMARY (NRCI/NRCA/NRCV) –
Documentation Author to indicate which Certificates must be submitted for the features to be recognized for compliance
(Retain copies and verify forms are completed and signed to post in field for Field Inspector to verify).
See Tables G. and H. in MCH and LTI Details Sections for Acceptance Tests and forms by equipment.

Building Component	Compliance Forms *(required for submittal)*	Confirmed Pass	Confirmed Fail
Envelope	☒ NRCI-ENV-01-E - For all buildings	☐	☐
	☐ NRCA-ENV-02-F- NFRC label verification for fenestration	☐	☐
Mechanical	☒ NRCI-MCH-01-E - For all buildings with Mechanical Systems	☐	☐
	☒ NRCA-MCH-02-A- Outdoor Air	☐	☐
	☒ NRCA-MCH-03-A – Constant Volume Single Zone HVAC	☐	☐
	☒ NRCA-MCH-04-H- Air Distribution Duct Leakage	☐	☐
	☒ NRCA-MCH-05-A- Air Economizer Controls	☐	☐
	☒ NRCA-MCH-06-A- Demand Control Ventilation	☐	☐
	☐ NRCA-MCH-07-A – Supply Fan Variable Flow Controls	☐	☐
	☐ NRCA-MCH-08-A- Valve Leakage Test	☐	☐
	☐ NRCA-MCH-09-A – Supply Water Temp Reset Controls	☐	☐
	☐ NRCA-MCH-10-A- Hydronic System Variable Flow Controls	☐	☐
	☐ NRCA-MCH-11-A – Auto Demand Shed Controls	☐	☐
	☒ NRCA-MCH-12-A- Packaged Direct Expansion Units	☐	☐
	☐ NRCA-MCH-13-A- Air Handling Units and Zone Terminal Units	☐	☐
	☐ NRCA-MCH-14-A- Distributed Energy Storage	☐	☐
	☐ NRCA-MCH-15-A – Thermal Energy Storage	☐	☐
	☐ NRCA-MCH-16-A- Supply Air Temp Reset Controls	☐	☐
	☐ NRCA-MCH-17-A – Condensate Water Temp Reset Controls	☐	☐
	☐ NRCA-MCH-18-A- Energy Management Controls Systems	☐	☐
	☐ NRCV-MCH-04-H- Duct Leakage Test	☐	☐

Project Name:	Math & Science Complex - Ventura College Bldg A	NRCC-PRF-01-E	Page 6 of 20
Project Address:	4667 Telegraph Road, Ventura 93003	Calculation Date/Time:	15:40, Thu, Jul 07, 2016
Compliance Scope:	ExistingAlteration	Input File Name:	Ventura College Bldg A 07072016.xml

H. CERTIFICATE OF INSTALLATION, CERTIFICATE OF ACCEPTANCE & CERTIFICATE OF VERIFICATION SUMMARY (NRCI/NRCA/NRCV) –
Documentation Author to indicate which Certificates must be submitted for the features to be recognized for compliance
(Retain copies and verify forms are completed and signed to post in field for Field Inspector to verify).
See Tables G. and H. in MCH and LTI Details Sections for Acceptance Tests and forms by equipment.

Building Component	Compliance Forms *(required for submittal)*	Confirmed Pass	Confirmed Fail
Plumbing	☐ NRCI-PLB-01-E - For all buildings with Plumbing Systems	☐	☐
	☐ NRCI-PLB-02-E - required on central systems in high-rise residential, hotel/motel application.	☐	☐
	☐ NRCI-PLB-03-E - Single dwelling unit systems in high-rise residential, hotel/motel application.	☐	☐
	☐ NRCI-PLB-21-E - HERS verified central systems in high-rise residential, hotel/motel application.	☐	☐
	☐ NRCI-PLB-22-E - HERS verified single dwelling unit systems in high-rise residential, hotel/motel application.	☐	☐
	☐ NRCV-PLB-21-H- HERS verified central systems in high-rise residential, hotel/motel application.	☐	☐
	☐ NRCV-PLB-22-H - HERS verified single dwelling unit systems in high-rise residential, hotel/motel application.	☐	☐
	☐ NRCI-STH-01-E - Any solar water heating	☐	☐
Indoor Lighting	☐ NRCI-LTI-01-E - For all buildings	☐	☐
	☐ NRCI-LTI-02-E - Lighting control system, or for an Energy Management Control System (EMCS)	☐	☐
	☐ NRCI-LTI-03-E - Line-voltage track lighting integral current limiter, or for a supplementary overcurrent protection panel used to energize only line-voltage track lighting	☐	☐
	☐ NRCI-LTI-04-E - Two interlocked systems serving an auditorium, a convention center, a conference room, or a theater	☐	☐
	☐ NRCI-LTI-05-E - Lighting Control Credit Power Adjustment Factor (PAF)	☐	☐
	☐ NRCI-LTI-06-E - Additional wattage installed in a video conferencing studio	☐	☐
	☐ NRCA-LTI-02-A - Occupancy sensors and automatic time switch controls.	☐	☐
	☐ NRCA-LTI-03-A - Automatic daylighting controls	☐	☐
	☐ NRCA-LTI-04-A - Demand responsive lighting controls	☐	☐
Outdoor Lighting	☐ NRCI-LTO-01-E – Outdoor Lighting	☐	☐
	☐ NRCI-LTO-02-E- EMCS Lighting Control System	☐	☐
	☐ NRCA-LTO-02-A - Outdoor Lighting Control	☐	☐
Sign Lighting	☐ NRCI-LTS-01-E – Sign Lighting	☐	☐
Electrical	☐ NRCI-ELC-01-E - Electrical Power Distribution	☐	☐
Photovoltaic	☐ NRCI-SPV-01-E Photovoltaic Systems	☐	☐

Project Name:	Math & Science Complex - Ventura College Bldg A	NRCC-PRF-01-E	Page 7 of 20
Project Address:	4667 Telegraph Road, Ventura 93003	Calculation Date/Time:	15:40, Thu, Jul 07, 2016
Compliance Scope:	ExistingAlteration	Input File Name:	Ventura College Bldg A 07072016.xml

H. CERTIFICATE OF INSTALLATION, CERTIFICATE OF ACCEPTANCE & CERTIFICATE OF VERIFICATION SUMMARY (NRCI/NRCA/NRCV) –
Documentation Author to indicate which Certificates must be submitted for the features to be recognized for compliance
(Retain copies and verify forms are completed and signed to post in field for Field Inspector to verify).
See Tables G. and H. in MCH and LTI Details Sections for Acceptance Tests and forms by equipment.

Building Component	Compliance Forms *(required for submittal)*	Confirmed Pass	Confirmed Fail
Covered Process	☐ NRCI-PRC-01-E Refrigerated Warehouse	☐	☐
	☐ NRCA-PRC-01-F- Compressed Air Systems	☐	☐
	☐ NRCA-PRC-02-F- Kitchen Exhaust	☐	☐
	☐ NRCA-PRC-03-F- Garage Exhaust	☐	☐
	☐ NRCA-PRC-04-F- Refrigerated Warehouse- Evaporator Fan Motor Controls	☐	☐
	☐ NRCA-PRC-05-F- Refrigerated Warehouse- Evaporative Condenser Controls	☐	☐
	☐ NRCA-PRC-06-F- Refrigerated Warehouse- Air Cooled Condenser Controls	☐	☐
	☐ NRCA-PRC-07F- Refrigerated Warehouse- Variable Speed Compressor	☐	☐
	☐ NRCA-PRC-08-F- Electrical Resistance Underslab Heating System	☐	☐

I. ENVELOPE GENERAL INFORMATION (See NRCC-PRF-ENV-DETAILS for more information)

1.	Total Conditioned Floor Area	6,688 ft²	5.	Number of Floors Above Grade	2
2.	Total Unconditioned Floor Area	0 ft²	6.	Number of Floors Below Grade	0
3.	Addition Conditioned Floor Area	0 ft²			
4.	Addition Unconditioned Floor Area	0 ft²			

7. Opaque Surfaces & Orientation	8. Total Gross Surface Area	9. Total Fenestration Area	10. Window to Wall Ratio	Confirmed Pass	Confirmed Fail
North Wall	1,517 ft²	140 ft²	09.2%	☐	☐
East Wall	1,123 ft²	158 ft²	14.1%	☐	☐
South Wall	1,517 ft²	298 ft²	19.6%	☐	☐
West Wall	935 ft²	112 ft²	12.0%	☐	☐
Total	**5,092 ft²**	**708 ft²**	**13.9%**	☐	☐
Roof	6,688 ft²	0 ft²	00.0%	☐	☐

Project Name:	Math & Science Complex - Ventura College Bldg A	NRCC-PRF-01-E	Page 8 of 20
Project Address:	4667 Telegraph Road, Ventura 93003	Calculation Date/Time:	15:40, Thu, Jul 07, 2016
Compliance Scope:	ExistingAlteration	Input File Name:	Ventura College Bldg A 07072016.xml

J. FENESTRATION ASSEMBLY SUMMARY § 110.6

1. Fenestration Assembly Name / Tag or I.D.	2. Fenestration Type	3. Certification Method¹	4. Assembly Method	5. Area ft²	6. Overall U-factor	7. Overall SHGC	8. Overall VT	9. Status²	Confirmed Pass	Confirmed Fail
Single Metal Clear	VerticalFenestration	DefaultPerformance	SiteBuilt	708	1.19	0.83	0.77	E	☐	☐

1 Newly installed fenestration shall have a certified NFRC Label Certificate or use the CEC default tables found in Table 110.6-A and Table 110.6-B. Center of Glass (COG) values are for the glass-only, determined by the manufacturer, and are shown for ease of verification. Site-built fenestration values are calculated per Nonresidential Appendix NA6 and are used in the analysis.
2 Status: N - New, A – Altered, E – Existing

Taking compliance credit for fenestration shading devices? (If "Yes", see NRCC-PRF-ENV-DETAILS for more information)	

K. OPAQUE SURFACE ASSEMBLY SUMMARY § 120.7/ § 140.3

1. Surface Name	2. Surface Type	3. Area (ft²)	4. Framing Type	5. Cavity R-Value	6. Continuous R-Value	7. U-Factor / F-Factor / C-Factor	8. Status¹	Confirmed Pass	Confirmed Fail
R-11 Wall7	ExteriorWall	5092	Wood	11	NA	U-Factor: 0.110	E	☐	☐
R-19 Roof Attic10	Roof	6688	Wood	19	NA	U-Factor: 0.055	E	☐	☐
Slab On Grade12	UndergroundFloor	6014	NA	0	NA	F-Factor: 0.730	E	☐	☐
Default Floor Crawlspace71	ExteriorFloor	670	NA	0	NA	U-Factor: 0.196	E	☐	☐

1 Status: N - New, A – Altered, E – Existing

L. ROOFING PRODUCT SUMMARY § 140.3

1. Product Type	2. Product ≥25 lb ft²	3. Aged Solar Reflectance	4. Thermal Emittance	5. SRI	6. Cool Roof Credit	7. CRRC Product ID Number	Confirmed Pass	Confirmed Fail
R-19 Roof Attic10	No	0.08	0.75	NA	No	NA	☐	☐

Project Name:	Math & Science Complex - Ventura College Bldg A	NRCC-PRF-01-E	Page 9 of 20
Project Address:	4667 Telegraph Road, Ventura 93003	Calculation Date/Time:	15:40, Thu, Jul 07, 2016
Compliance Scope:	ExistingAlteration	Input File Name:	Ventura College Bldg A 07072016.xml

M. HVAC SYSTEM SUMMARY (see NRCC-PRF-MCH-DETAILS for more information) § 110.1 / § 110.2

Dry System Equipment ¹ (Fan & Economizer info included below in Table N)

1. Equip Name	2. Equip Type	3. System Type (Simple ³ or Complex ⁴)	4. Qty	5. Total Heating Output (kBtu/h)	6. Supp Heat Source (Y/N)	7. Supp Heat Output (kBtuh)	8. Total Cooling Output (kBtu/h)	9. Efficiency Cooling	9. Efficiency Heating	10. Acceptance Testing Required? (Y/N) ⁵	11. Status⁶	Confirmed Pass	Confirmed Fail
RTU-1A1	SZHP (Packaged3Phase)	Simple	1	136	No	0	149	EER-10.6	COP-3.2	Yes	N	☐	☐
RTU-2A36	SZHP (Packaged3Phase)	Simple	1	108	No	0	124	EER-11.2	COP-3.3	Yes	N	☐	☐
RTU-3A45	SZHP (Packaged3Phase)	Simple	1	150	No	0	155	EER-11.4	COP-3.3	Yes	N	☐	☐
FC-7A/CU-7A53	SZHP (Split3Phase)	Simple	1	17	No	0	18	SEER-14.5	HSPF-8.5	Yes	N	☐	☐
CU-1A61	SZHP (Split3Phase)	Simple	1	54	No	0	69	EER-13.5	COP-3.7	Yes	N	☐	☐

Wet System Equipment ² / *Pumps*

12. Equip Name	13. Equip Type	14. Qty	15. Vol (gal)	16. Rated Capacity (kBtu/h)	17. Efficiency	18. Standby Loss	19. Tank Ext. R Value	20. Qty	21. GPM	22. HP	23. VSD (Y/N)	24. Status⁶	Confirmed Pass	Confirmed Fail

1 Dry System Equipment includes furnaces, air handling units, heat pumps, etc.
2 Wet System Equipment includes boilers, chillers, cooling towers, water heaters, etc.
3 Simple Systems must complete NRCC-CXR-03-E commissioning design review form
4 Complex Systems must complete NRCC-CXR-04-E commissioning design review form
5 A summary of which acceptance tests are applicable is provided in NRCC-PRF-MCH-DETAILS
6 Status: N - New, A – Altered, E – Existing

Discrepancy between modeled and designed equipment sizing? (If "Yes", see Table F. "Additional Remarks" for an explanation)	No

J & S CONSULTING ENGINEERS, INC.
ELECTRICAL ▫ MECHANICAL
FIRE PROTECTION
3111 Winona Ave., #102
Burbank, Ca 91504
Tel.: (818) 841-0303
Fax: (818) 841-8531
470 Helga Ct. Unit A
Newbury Park, Ca. 91320
Tel. (818) 398-5793
Fax: (818) 841-8531
www.jandsconsulting.com
E-Mail: jsmail@jandsconsulting.com
PROJECT No. 45461

LICENSED ARCHITECT JEAN ANN AMADOR C-22205 APRIL 30, 2019 RENEWAL DATE STATE OF CALIFORNIA

REGISTERED PROFESSIONAL ENGINEER ARNEL B. DE SILVA No. M22816 EXPIRES 09-30-18 MECHANICAL STATE OF CALIFORNIA

VENTURA COLLEGE
4667 TELEGRAPH ROAD, VENTURA , CALIFORNIA, 93003
VENTURA COUNTY COMMUNITY COLLEGE DISTRICT
MATH & SCIENCE COMPLEX

IDENTIFICATION STAMP
DIV. OF THE STATE ARCHITECT
OFFICE OF REGULATION SERVICES
APPL. 03- 117754
AC ___ FLS ___ SS ___
DATE JUL 0 5 2017

NO.	DATE	DESCRIPTION	BY
	12.19.16	DSA SUBMITTAL	

REVISIONS

DRAWN BY:	S.L.
CHECKED BY:	A.D.S.
DATE	05.12.17
JOB NO:	45461

SHEET TITLE

MECHANICAL TITLE-24 COMPLIANCE FORMS (BLDG. "A")

SHEET

M-9.1

DWG # 61 OF 82

Job No. 45461; FILE: N:\45461-VenturaColl\M9-1.dwg; Layout1 Ref. Files: SHEET.dwg
Plot Date: 05-11-17, 10:50am; Plot scale: 1=1-PS By: S.L. Prev. plot: 05-11-17, 10:22am
05-12-17 DSA SUBMITTAL

Project Name:	Math & Science Complex - Ventura College Bldg A	NRCC-PRF-01-E	Page 10 of 20
Project Address:	4667 Telegraph Road, Ventura 93003	Calculation Date/Time:	15:40, Thu, Jul 07, 2016
Compliance Scope:	ExistingAlteration	Input File Name:	Ventura College Bldg A 07072016.xml

N. ECONOMIZER & FAN SYSTEMS SUMMARY[1] — § 140.4 — Confirmed

1.	2.	3.					4.					5.		
Equip Name	Outside Air	Supply Fan					Return Fan					Economizer Type (if present)	Pass	Fail
	CFM	CFM	HP	BHP	TSP (inch WC)	Control	CFM	HP	BHP	TSP (inch WC)	Control			
RTU-1A1	1994	5000	0.450	0.450	0.34	ConstantVolume	NA	NA	NA	NA	NA	DifferentialEnthalpy	☐	☐
RTU-2A36	1238	3400	0.100	0.100	0.11	ConstantVolume	NA	NA	NA	NA	NA	DifferentialEnthalpy	☐	☐
RTU-3A45	1063	5000	0.100	0.100	0.08	ConstantVolume	NA	NA	NA	NA	NA	DifferentialEnthalpy	☐	☐
FC-7A/CU-7A53	217	600	0.100	0.100	0.53	ConstantVolume	NA	NA	NA	NA	NA	DifferentialEnthalpy	☐	☐
CU-1A61	101	1890	0.160	0.160	0.27	ConstantVolume	NA	NA	NA	NA	NA	NoEconomizer	☐	☐

[1] *Mechanical ventilation calculations and exhaust fans are included in the NRCC-PRF-MCH-DETAILS section*

O. EQUIPMENT CONTROLS — § 120.2 — Confirmed

1. Equip Name	2. Equip Type	3. Controls	Pass	Fail
RTU-1A1	SZHP	5 Zones With CO2Sensor Vent. Control Differential Enthalpy Economizer No Supply Air Temp. Control	☐	☐
RTU-2A36	SZHP	1 Zones With CO2Sensor Vent. Control Differential Enthalpy Economizer No Supply Air Temp. Control	☐	☐
RTU-3A45	SZHP	1 Zones With CO2Sensor Vent. Control Differential Enthalpy Economizer No Supply Air Temp. Control	☐	☐
FC-7A/CU-7A53	SZHP	1 Zones With CO2Sensor Vent. Control Differential Enthalpy Economizer No Supply Air Temp. Control	☐	☐

Project Name:	Math & Science Complex - Ventura College Bldg A	NRCC-PRF-01-E	Page 11 of 20
Project Address:	4667 Telegraph Road, Ventura 93003	Calculation Date/Time:	15:40, Thu, Jul 07, 2016
Compliance Scope:	ExistingAlteration	Input File Name:	Ventura College Bldg A 07072016.xml

O. EQUIPMENT CONTROLS — § 120.2 — Confirmed

1. Equip Name	2. Equip Type	3. Controls	Pass	Fail
CU-1A61	SZHP	No DCV Controls No Economizer No Supply Air Temp. Control	☐	☐

P. SYSTEM DISTRIBUTION SUMMARY — § 120.4/ § 140.4(i)

This Section Does Not Apply

Does the Project Include Zonal Systems? (if "Yes", see NRCC-PRF-MCH-DETAILS for system information)	No
Does the Project Include a Solar Hot Water System? (if "Yes", see NRCC-PRF-MCH-DETAILS for system information)	No
Multifamily or Hotel/ Motel Occupancy? (if "Yes", see NRCC-PRF-MCH-DETAILS for DHW system information)	No

Q. INDOOR CONDITIONED LIGHTING GENERAL INFO (see NRCC-PRF-LTI-DETAILS for more info)[3] — § 140.6 — Confirmed

1.	2.	3.	4.	5.			
Occupancy Type [1]	Conditioned Floor Area [2] (ft^2)	Installed Lighting Power (Watts)	Lighting Control Credits (Watts)	Additional (Custom) Allowance		Pass	Fail
				Area Category Footnotes (Watts)	Tailored Method (Watts)	☐	☐
Classrooms, Lecture, Training, Vocational Areas	6,014	7,216	0	0	0	☐	☐
Office (250 square feet in floor area or less)	674	674	0	0	0	☐	☐
Building Totals:	6,688	7,890		0			

[1] *See Table 140.6-C*
[2] *See NRCC-LTI-01-E for unconditioned spaces*
[3] *Lighting information for existing spaces modeled is not included in the table*

R. INDOOR CONDITIONED LIGHTING SCHEDULE (Adapted from NRCC-LTI-01-E)[1] — § 130.0

Project Name:	Math & Science Complex - Ventura College Bldg A	NRCC-PRF-01-E	Page 12 of 20
Project Address:	4667 Telegraph Road, Ventura 93003	Calculation Date/Time:	15:40, Thu, Jul 07, 2016
Compliance Scope:	ExistingAlteration	Input File Name:	Ventura College Bldg A 07072016.xml

Luminaire Schedule (includes all permanent installed lighting in conditioned space, and portable lighting over 0.3 w/ft² in offices)		Installed Watts (Conditioned)					Confirmed	
Name or Item Tag	Complete Luminaire Description (i.e., 3-lamp fluorescent troffer, F32T8, one dimmable electronic ballast)	Watts per luminaire	How Wattage is Determined: CEC Default from NA8	How Wattage is Determined: According to §130.0(c)	Total Number Luminaires	Installed Watts	Pass	Fail

[1] *If lighting power densities were used in the compliance model Building Departments will need to check prescriptive forms for Luminaire Schedule details.*

S1. COVERED PROCESS SUMMARY – ENCLOSED PARKING GARAGES — § 140.9

This Section Does Not Apply

S2. COVERED PROCESS SUMMARY – COMMERCIAL KITCHENS — § 140.9

This Section Does Not Apply

S3. COVERED PROCESS SUMMARY – COMPUTER ROOMS — § 140.9

This Section Does Not Apply

S4. COVERED PROCESS SUMMARY – LABORATORY EXHAUSTS — § 140.9

This Section Does Not Apply

T. UNMET LOAD HOURS

Thermal Zone Name	Cooling Unmet Load Hour Limit for Thermal Zone	Proposed Cooling Unmet Load Hours	Heating Unmet Load Hour Limit for Thermal Zone	Proposed Heating Unmet Load Hours
5-Cleanroom (103)	150	0	150	302

U. ENERGY USE SUMMARY

	Electric (kWh/yr)	Natural Gas (therms/yr)
Total Annual Baseline	55400.6	375.54
Total Annual Proposed	45662.6	0

Project Name:	Math & Science Complex - Ventura College Bldg A	NRCC-PRF-01-E	Page 13 of 20
Project Address:	4667 Telegraph Road, Ventura 93003	Calculation Date/Time:	15:40, Thu, Jul 07, 2016
Compliance Scope:	ExistingAlteration	Input File Name:	Ventura College Bldg A 07072016.xml

DOCUMENTATION AUTHOR'S DECLARATION STATEMENT — § 10-103

I certify that this Certificate of Compliance documentation is accurate and complete.

Documentation Author Name: Arnel B. de Silva, P.E., LEED AP BD+C	Signature: *(signed)*
Company: J & S Consulting Engineers	
Address: 3111 Winona Ave., Suite 102	Signature Date: 5/12/17
City/State/Zip: Burbank CA 91504	CEA Identification (If applicable): M22816
Phone: (818)841 0303	

RESPONSIBLE PERSON'S DECLARATION STATEMENT

I certify the following under penalty of perjury, under the laws of the State of California:

1	I hereby affirm that I am eligible under the provisions of Division 3 of the Business and Professions Code to sign this document as the person responsible for its preparation; and that I am licensed in the State of California as a civil engineer, mechanical engineer, electrical engineer, or I am a licensed architect.
2	I affirm that I am eligible under the provisions of Division 3 of the Business and Professions Code by section 5537.2 or 6737.3 to sign this document as the person responsible for its preparation; and that I am a licensed contractor performing this work.
3	I affirm that I am eligible under Division 3 of the Business and Professions Code to sign this document because it pertains to a structure or type of work described as exempt pursuant to Business and Professions Code Sections 5537, 5538 and 6737.1.

Responsible Envelope Designer Name: Arnel de Silva, P.E.	Signature: *(signed)*	
Company: J & S Consulting Engineers, Inc.		
Address: 3111 Winona Avenue, Suite 102	Date Signed: 5/12/17	
City/State/Zip: Burbank, CA 91504	Declaration Statement Type: 1	
Phone: 818-841-0303	Title:	License #:
Responsible Lighting Designer Name:	Signature: NOT IN SCOPE	
Company:		
Address:	Date Signed:	
City/State/Zip:	Declaration Statement Type:	
Phone:	Title:	License #:
Responsible Mechanical Designer Name: Arnel B. de Silva, P.E.	Signature: *(signed)*	
Company: J & S Consulting Engineers, Inc.		
Address: 3111 Winona Avenue, Suite 102	Date Signed: 5/12/17	
City/State/Zip: Burbank CA 91504	Declaration Statement Type:	
Phone: (818) 841-0303	Title:	License #:

Project Name:	Math & Science Complex - Ventura College Bldg A	NRCC-PRF-01-E	Page 14 of 20
Project Address:	4667 Telegraph Road, Ventura 93003	Calculation Date/Time:	15:40, Thu, Jul 07, 2016
Compliance Scope:	ExistingAlteration	Input File Name:	Ventura College Bldg A 07072016.xml

NRCC-PRF-ENV-DETAILS -SECTION START-

A. OPAQUE SURFACE ASSEMBLY DETAILS — Confirmed

1. Surface Name	2. Surface Type	3. Description of Assembly Layers	4. Notes	Pass	Fail
R-11 Wall7	ExteriorWall	Stucco - 7/8 in. Vapor permeable felt - 1/8 in. Wood framed wall, 16in. OC, 3.5in., R-11 Gypsum Board - 1/2 in.		☐	☐
R-19 Roof Attic10	Roof	Asphalt shingles - 1/4 in. Vapor permeable felt - 1/8 in. Plywood - 1/2 in. Air - Cavity - Wall Roof Ceiling - 4 in. or more Wood framed roof, 16in. OC, 3.5in., R-19 Gypsum Board - 1/2 in.		☐	☐
Slab On Grade12	UndergroundFloor	Slab Type = UnheatedSlabOnGrade Insulation Orientation = None Insulation R-Value = R0		☐	☐
Default Floor Crawlspace71	ExteriorFloor	Air - Floor - 3 1/2 in. Plywood - 1/2 in. Carpet - 3/4 in.		☐	☐

B. OVERHANG DETAILS (Adapted from NRCC-ENV-02-E)

This Section Does Not Apply

C. OPAQUE DOOR SUMMARY

This Section Does Not Apply

Project Name:	Math & Science Complex - Ventura College Bldg A	NRCC-PRF-01-E	Page 15 of 20
Project Address:	4667 Telegraph Road, Ventura 93003	Calculation Date/Time:	15:40, Thu, Jul 07, 2016
Compliance Scope:	ExistingAlteration	Input File Name:	Ventura College Bldg A 07072016.xml

NRCC-PRF-MCH-DETAILS -SECTION START-

A. MECHANICAL VENTILATION AND REHEAT *(Adapted from 2013-NRCC-MCH-03-E)* — Confirmed

CONDITIONED ZONE NAME	HEATING / COOLING SYSTEM ID	DESIGN PRIMARY AIR FLOW (CFM)	DESIGN PRIMARY MINIMUM AIR FLOW (CFM)	MINIMUM PRIMARY AIR FLOW FRACTION	MAXIMUM HEATING AIR FLOW (CFM)	MAXIMUM HEATING AIR FLOW FRACTION	DDC CONTROL (Y/N)	VENT SYSTEM ID	CONDITIONED AREA (ft2)	MIN. VENT PER AREA (CFM/ft2)	DESIGN NUM. OF PEOPLE	MIN. VENT PER PERSON (CFM/person)	REQ'D VENT AIR FLOW (CFM)	DESIGN VENT AIR FLOW (CFM)	TRANSFER AIRFLOW (CFM)	DCV (Y/N)	Pass	Fail
	1. DESIGN AIR FLOWS							2. VENTILATION (§ 120.1)										
1-Engineer/Drafting Lab Beg	RTU-1A1	2,891	NA	NA	NA	NA	N	RTU-1A1	1,537	0.38	77	7.5	576	1,153	NA	Y	☐	☐
2-Print/Work (104)	RTU-1A1	459	NA	NA	NA	NA	N	RTU-1A1	244	0.38	12	7.5	92	183	NA	Y	☐	☐
3-Office Drafting Prep(105)	RTU-1A1	331	NA	NA	NA	NA	N	RTU-1A1	176	0.38	9	7.5	66	132	NA	Y	☐	☐
4-Engineer/Materials Lab Ad	RTU-1A1	1,110	NA	NA	NA	NA	N	RTU-1A1	590	0.38	30	7.5	221	443	NA	Y	☐	☐
5-Cleanroom (103)	RTU-1A1	209	NA	NA	NA	NA	N	RTU-1A1	111	0.38	6	7.5	42	83	NA	Y	☐	☐
6-Engineer/Drafting Lab Adv	RTU-2A36	3,400	NA	NA	NA	NA	N	RTU-2A36	1,650	0.38	83	7.5	619	1,238	NA	Y	☐	☐
7-CAD Lab(106)	RTU-3A45	5,000	NA	NA	NA	NA	N	RTU-3A45	1,417	0.38	71	7.5	531	1,063	NA	Y	☐	☐
8-Mini-CAD Lab(108)	FC-7A/CU-7A53	600	NA	NA	NA	NA	N	FC-7A/CU-7A53	289	0.38	14	7.5	108	217	NA	Y	☐	☐
9-Office(200)	CU-1A61	210	210	1.00	NA	NA	N	CU-1A61	78	0.15	1	15.0	12	12	NA	N	☐	☐
10-Office(201)	CU-1A61	210	210	1.00	NA	NA	N	CU-1A61	74	0.15	1	15.0	11	11	NA	N	☐	☐
11-Office(202)	CU-1A61	210	210	1.00	NA	NA	N	CU-1A61	74	0.15	1	15.0	11	11	NA	N	☐	☐
12-Office(203)	CU-1A61	210	210	1.00	NA	NA	N	CU-1A61	74	0.15	1	15.0	11	11	NA	N	☐	☐

Project Name:	Math & Science Complex - Ventura College Bldg A	NRCC-PRF-01-E	Page 16 of 20
Project Address:	4667 Telegraph Road, Ventura 93003	Calculation Date/Time:	15:40, Thu, Jul 07, 2016
Compliance Scope:	ExistingAlteration	Input File Name:	Ventura College Bldg A 07072016.xml

A. MECHANICAL VENTILATION AND REHEAT *(Adapted from 2013-NRCC-MCH-03-E)* — Confirmed

CONDITIONED ZONE NAME	HEATING / COOLING SYSTEM ID	DESIGN PRIMARY AIR FLOW (CFM)	DESIGN PRIMARY MINIMUM AIR FLOW (CFM)	MINIMUM PRIMARY AIR FLOW FRACTION	MAXIMUM HEATING AIR FLOW (CFM)	MAXIMUM HEATING AIR FLOW FRACTION	DDC CONTROL (Y/N)	VENT SYSTEM ID	CONDITIONED AREA (ft2)	MIN. VENT PER AREA (CFM/ft2)	DESIGN NUM. OF PEOPLE	MIN. VENT PER PERSON (CFM/person)	REQ'D VENT AIR FLOW (CFM)	DESIGN VENT AIR FLOW (CFM)	TRANSFER AIRFLOW (CFM)	DCV (Y/N)	Pass	Fail
	1. DESIGN AIR FLOWS							2. VENTILATION (§ 120.1)										
13-Office(204)	CU-1A61	210	210	1.00	NA	NA	N	CU-1A61	74	0.15	1	15.0	11	11	NA	N	☐	☐
14-Office(205)	CU-1A61	210	210	1.00	NA	NA	N	CU-1A61	74	0.15	1	15.0	11	11	NA	N	☐	☐
15-Office(206)	CU-1A61	210	210	1.00	NA	NA	N	CU-1A61	74	0.15	1	15.0	11	11	NA	N	☐	☐
16-Office(207)	CU-1A61	210	210	1.00	NA	NA	N	CU-1A61	74	0.15	1	15.0	11	11	NA	N	☐	☐
17-Office(208)	CU-1A61	210	210	1.00	NA	NA	N	CU-1A61	78	0.15	1	15.0	12	12	NA	N	☐	☐
								TOTAL	6,688		311		2,356	4,613	NA		☐	☐

B. ZONAL SYSTEM AND TERMINAL UNIT SUMMARY — § 140.4 — Confirmed

1. System ID	2. System Type	3. Qty	4. Rated Capacity (kBtuh) Heating	Cooling	5. Economizer	6. Zone Name	7. Airflow (cfm) Design	Min.	Min. Ratio	8. Fan BHP	Cycles	ECM Motor	Pass	Fail
Cleanroom (103)31-TRM	Uncontrolled	1	NA	NA	NA	5-Cleanroom (103)	209	NA	NA	NA	NA	☐	☐	☐
Engineer/Materials Lab Ad24-TRM	Uncontrolled	1	NA	NA	NA	4-Engineer/Materials Lab Ad	1110	NA	NA	NA	NA	☐	☐	☐
Office Drafting Prep(105)19-TRM	Uncontrolled	1	NA	NA	NA	3-Office Drafting Prep(105)	331	NA	NA	NA	NA	☐	☐	☐
Print/Work (104)15-TRM	Uncontrolled	1	NA	NA	NA	2-Print/Work (104)	459	NA	NA	NA	NA	☐	☐	☐

Project Name:	Math & Science Complex - Ventura College Bldg A	NRCC-PRF-01-E	Page 17 of 20
Project Address:	4667 Telegraph Road, Ventura 93003	Calculation Date/Time:	15:40, Thu, Jul 07, 2016
Compliance Scope:	ExistingAlteration	Input File Name:	Ventura College Bldg A 07072016.xml

B. ZONAL SYSTEM AND TERMINAL UNIT SUMMARY — § 140.4 — Confirmed

1. System ID	2. System Type	3. Qty	4. Rated Capacity (kBtuh) Heating	Cooling	5. Economizer	6. Zone Name	7. Airflow (cfm) Design	Min.	Min. Ratio	8. Fan BHP	Cycles	ECM Motor	Pass	Fail
Engineer/Drafting Lab Beg3-TRM	Uncontrolled	1	NA	NA	NA	1-Engineer/Drafting Lab Beg	2891	NA	NA	NA	NA	☐	☐	☐
Engineer/Drafting Lab Adv38-TRM	Uncontrolled	1	NA	NA	NA	6-Engineer/Drafting Lab Adv	3400	NA	NA	NA	NA	☐	☐	☐
CAD Lab(106)47-TRM	Uncontrolled	1	NA	NA	NA	7-CAD Lab(106)	5000	NA	NA	NA	NA	☐	☐	☐
Mini-CAD Lab(108)55-TRM	Uncontrolled	1	NA	NA	NA	8-Mini-CAD Lab(108)	600	NA	NA	NA	NA	☐	☐	☐
Office(208)114-TRM	VAVNoReheatBox	1	NA	NA	NA	17-Office(208)	210	210	1.00	NA	NA	☐	☐	☐
Office(207)108-TRM	VAVNoReheatBox	1	NA	NA	NA	16-Office(207)	210	210	1.00	NA	NA	☐	☐	☐
Office(206)102-TRM	VAVNoReheatBox	1	NA	NA	NA	15-Office(206)	210	210	1.00	NA	NA	☐	☐	☐
Office(205)96-TRM	VAVNoReheatBox	1	NA	NA	NA	14-Office(205)	210	210	1.00	NA	NA	☐	☐	☐
Office(204)90-TRM	VAVNoReheatBox	1	NA	NA	NA	13-Office(204)	210	210	1.00	NA	NA	☐	☐	☐
Office(203)84-TRM	VAVNoReheatBox	1	NA	NA	NA	12-Office(203)	210	210	1.00	NA	NA	☐	☐	☐
Office(202)78-TRM	VAVNoReheatBox	1	NA	NA	NA	11-Office(202)	210	210	1.00	NA	NA	☐	☐	☐
Office(201)72-TRM	VAVNoReheatBox	1	NA	NA	NA	10-Office(201)	210	210	1.00	NA	NA	☐	☐	☐
Office(200)63-TRM	VAVNoReheatBox	1	NA	NA	NA	9-Office(200)	210	210	1.00	NA	NA	☐	☐	☐

C. EXHAUST FAN SUMMARY

This Section Does Not Apply

D. DHW EQUIPMENT SUMMARY – *(Adapted from NRCC-PLB-01)*

This Section Does Not Apply

E. MULTI-FAMILY CENTRAL DHW SYSTEM DETAILS

This Section Does Not Apply

Project Name:	Math & Science Complex - Ventura College Bldg A	NRCC-PRF-01-E	Page 18 of 20
Project Address:	4667 Telegraph Road, Ventura 93003	Calculation Date/Time:	15:40, Thu, Jul 07, 2016
Compliance Scope:	ExistingAlteration	Input File Name:	Ventura College Bldg A 07072016.xml

F. SOLAR HOT WATER HEATING SUMMARY (Adapted from NRCC-STH-01)

This Section Does Not Apply

G. MECHANICAL HVAC ACCEPTANCE TESTS & FORMS *(Adapted from 2013-NRCC-MCH-01-E)* — § RA4

Declaration of Required Acceptance Certificates (NRCA) – Acceptance Certificates that may be submitted. (Retain copies and verify forms are completed and signed to post in field for Field Inspector to verify).

Test Description		MCH-02A	MCH-03A	MCH-04A	MCH-05A	MCH-06A	MCH-07A	MCH-08A	MCH-09A	MCH-10A	MCH-11A	MCH-12A	MCH-13A	MCH-14A	MCH-15A	MCH-16A	MCH-17A	MCH-18A	Confirmed	
Equipment Requiring Testing or Verification	# of units	Outdoor Air	Single Zone Unitary	Air Dist. Ducts	Economizer Controls	DCV	Supply Fan VAV	Valve leakage	Supply Water Temp. Reset	Hyd. Variable Flow Control	Auto Demand Shed Control	FDD for DX Units	Auto FDD for Air & Zone	Dist. Energy Storage DX AC	TES Systems	Supply Air Temp. Reset	Condenser Water Reset Controls	ECMS	Pass	Fail
RTU-1A1	1	X	X	X	X	X	--	--	--	--	--	X	--	--	--	--	--	--	☐	☐
RTU-2A36	1	X	X	X	X	X	--	--	--	--	--	X	--	--	--	--	--	--	☐	☐
RTU-3A45	1	X	X	X	X	X	--	--	--	--	--	X	--	--	--	--	--	--	☐	☐
FC-7A/CU-7A53	1	X	X	--	X	X	--	--	--	--	--	--	--	--	--	--	--	--	☐	☐
CU-1A61	1	X	X	X	--	X	--	--	--	--	--	--	--	--	--	--	--	--	☐	☐

H. EVAPORATIVE COOLER SUMMARY

This Section Does Not Apply

NRCC-PRF-LTI-DETAILS -SECTION START-

A. INDOOR CONDITIONED LIGHTING CONTROL CREDITS (Adapted from NRCC-LTI-02-E) — § 140.6

This Section Does Not Apply

J & S
CONSULTING ENGINEERS, INC.
ELECTRICAL ▫ MECHANICAL
FIRE PROTECTION
3111 Winona Ave., #102
Burbank, Ca 91504
Tel.: (818) 841-0303
Fax: (818) 841-8531
470 Helga Ct. Unit A
Newbury Park, Ca. 91320
Tel. (818) 398-5793
Fax: (818) 841-8531
www.jandsconsulting.com
E-Mail: jsmail@jandsconsulting.com

PROJECT No. 45461

LICENSED ARCHITECT JEAN ANN AMADOR C-22205 APRIL 30, 2019 RENEWAL DATE STATE OF CALIFORNIA

REGISTERED PROFESSIONAL ENGINEER ARNEL B. DE SILVA No. M22816 EXPIRES 09-30-18 MECHANICAL STATE OF CALIFORNIA

VENTURA COLLEGE

4667 TELEGRAPH ROAD, VENTURA, CALIFORNIA, 93003
VENTURA COUNTY COMMUNITY COLLEGE DISTRICT
MATH & SCIENCE COMPLEX

IDENTIFICATION STAMP
DIV. OF THE STATE ARCHITECT
OFFICE OF REGULATION SERVICES
APPL. 03- 117754
AC ✓ FLS ✓ SS *(initialed)*
DATE JUL 05 2017

NO.	DATE	DESCRIPTION	BY
	12.19.16	DSA SUBMITTAL	

REVISIONS

DRAWN BY:	S.L.
CHECKED BY:	A.D.S.
DATE	05.12.17
JOB NO:	45461

SHEET TITLE

MECHANICAL TITLE-24 COMPLIANCE FORMS (BLDG. "A")

SHEET

M-9.2

DWG # 62 OF 82

Job No. 45461; FILE: N:\45461-VenturaColl\M9-2.dwg; Layout1 Ref. Files: SHEET.dwg
Plot Date: 05-11-17, 10:50am; Plot scale: 1=1-PS By: S.L. Prev. plot: 05-11-17, 10:23am
05-12-17 DSA SUBMITTAL

Project Name:	Math & Science Complex - Ventura College Bldg A	NRCC-PRF-01-E	Page 19 of 20
Project Address:	4667 Telegraph Road, Ventura 93003	Calculation Date/Time:	15:40, Thu, Jul 07, 2016
Compliance Scope:	Existing&Alteration	Input File Name:	Ventura College Bldg A 07072016.xml

B. INDOOR CONDITIONED LIGHTING MANDATORY LIGHTING CONTROLS (Adapted from NRCC-LTI-02-E) — **§ 130.1**

This Section Does Not Apply

§130.1(a) = Manual area controls; §130.1(b) = Multi Level; §130.1(c) = Auto Shut-Off; §130.1(d) = Mandatory Daylight; §130.1(e) = Demand Responsive

C. TAILORED METHOD LIGHTING POWER ALLOWANCE SUMMARY AND CHECKLIST (Adapted from NRCC-LTI-04-E) — **§ 140.6**

General lighting power (see Table D)	0
General lighting power from special function areas (see Table E)	NA
Additional "use it or lose it" (See Table G)	0
Total watts	0

D. GENERAL LIGHTING POWER (Adapted from NRCC-LTI-04-E) — **§ 140.6-D**

This Section Does Not Apply

E. GENERAL LIGHTING FROM SPECIAL FUNCTION AREAS (Adapted from NRCC-LTI-04-E) — **§ 140.6(c) 3H**

Room Number	Primary Function Area	Illuminance Value (LUX)	Room Cavity Ratio (Table G)	Allowed LPD	Floor Area (ft²)	Allowed Watts	Confirmed Pass	Confirmed Fail
NA	NA	NA	NA	NA	NA	NA	☐	☐

Note: Tailored Method for Special Function Areas is not currently implemented

F. ROOM CAVITY RATIO (Adapted from NRCC-LTI-04-E)

Rectangular Spaces

Room Number	Task/Activity Description	Room Length (ft)	Room Width (ft)	Room Cavity Height (ft)	RCR	Confirmed Pass	Confirmed Fail
NA	NA	NA	NA	NA	NA	☐	☐

Non-Rectangular Spaces

This Section Does Not Apply

Note: All applicable spaces are listed under the Non-Rectangular Spaces table

Project Name:	Math & Science Complex - Ventura College Bldg A	NRCC-PRF-01-E	Page 20 of 20
Project Address:	4667 Telegraph Road, Ventura 93003	Calculation Date/Time:	15:40, Thu, Jul 07, 2016
Compliance Scope:	Existing&Alteration	Input File Name:	Ventura College Bldg A 07072016.xml

G. ADDITIONAL "USE IT OR LOSE IT" (Adapted from NRCC-LTI-04-E)

1. Wall Display	2. Combined Floor Display and Task Lighting	3. Combined Ornamental and Special Effects Lighting	4. Very Valuable Merchandise	Allowed Watts	Confirmed Pass	Confirmed Fail
0	0	0	0	0	☐	☐

5. Wall Display

This Section Does Not Apply

6. Floor Display and Task Lighting

This Section Does Not Apply

7. Combined Ornamental and Special Effects Lighting

This Section Does Not Apply

8. Very Valuable Merchandise

This Section Does Not Apply

H. INDOOR & OUTDOOR LIGHTING ACCEPTANCE TESTS & FORMS (Adapted from NRCC-LTI-01-E and NRCC-LTO-01-E) — **§ 130.4**

Declaration of Required Acceptance Certificates (NRCA) –Acceptance Certificates that must be verified in the field. (Retain copies and verify forms are completed and signed to post in field for Field Inspector to verify).

Test Description		Indoor			Outdoor	Confirmed	
		NRCA-LTI-02-A	NRCA-LTI-03-A	NRCA-LTI-04-A	NRCA-LTO-02-A		
Equipment Requiring Testing or Verification	# of units	Occ Sensors / Auto Time Switch	Auto Daylight	Demand Responsive	Outdoor Controls	Pass	Fail
Occupant Sensors	0	☐	☐	☐	☐	☐	☐
Automatic Time Switch	0	☐	☐	☐	☐	☐	☐
Automatic Daylighting	0	☐	☐	☐	☐	☐	☐
Demand Responsive	0	☐	☐	☐	☐	☐	☐
Outdoor Controls	0	☐	☐	☐	☐	☐	☐

ENVELOPE MANDATORY MEASURES: NONRESIDENTIAL — ENV-MM

Project Name: *Math & Science Complex - Ventura College Bldg "A"* Date: *7/1/2016*

DESCRIPTION

Building Envelope Measures:

§110.8(a):	Installed insulating material shall have been certified by the manufacturer to comply with the California Quality Standards for insulating material, Title 20 Chapter 4, Article 3.
§110.8(c):	All Insulating Materials shall be installed in compliance with the flame spread rating and smoke density requirements of Sections 2602 and 707 of Title 24, Part 2.
§110.8(f):	The opaque portions of framed demising walls in nonresidential buildings shall have insulation with an installed R-value of no less than R-13 between framing members.
§110.7(a):	All Exterior Joints and openings in the building that are observable sources of air leakage shall be caulked, gasketed, weatherstripped or otherwise sealed.
§110.6(a):	Manufactured fenestration products and exterior doors shall have air infiltration rates not exceeding 0.3 cfm/ft.² of window area, 0.3 cfm/ft.² of door area for residential doors, 0.5 cfm/ft.² of door area for nonresidential single doors (swinging and sliding), and 1.0 cfm/ft.² for nonresidential double doors (swinging).
§110.6(a):	Fenestration U-factor shall be rated in accordance with NFRC 100, or the applicable default U-factor.
§110.6(a) :	Fenestration SHGC shall be rated in accordance with NFRC 200, or NFRC 100 for site-built fenestration, or the applicable default SHGC.
§110.6(a):	Site Constructed Doors, Windows and Skylights shall be caulked between the unit and the building, and shall be weatherstripped (except for unframed glass doors and fire doors).

J & S CONSULTING ENGINEERS, INC.
ELECTRICAL ▫ MECHANICAL
FIRE PROTECTION
3111 Winona Ave., #102
Burbank, Ca 91504
Tel.: (818) 841-0303
Fax: (818) 841-8531
470 Helga Ct. Unit A
Newbury Park, Ca. 91320
Tel. (818) 398-5793
Fax: (818) 841-8531
www.jandsconsulting.com
E-Mail: jsmail@jandsconsulting.com

PROJECT No. 45461

LICENSED ARCHITECT — JAMES W. TAYLOR — C-22205 — APRIL 30, 2019 RENEWAL DATE — STATE OF CALIFORNIA

REGISTERED PROFESSIONAL ENGINEER — JAMES B. DE SILVA — No. M22816 — EXPIRES 09-30-18 — MECHANICAL — STATE OF CALIFORNIA

VENTURA COLLEGE

4667 TELEGRAPH ROAD, VENTURA , CALIFORNIA, 93003
VENTURA COUNTY COMMUNITY COLLEGE DISTRICT

MATH & SCIENCE COMPLEX

IDENTIFICATION STAMP
DIV. OF THE STATE ARCHITECT
OFFICE OF REGULATION SERVICES
APPL. 03- 117754
AC. — FLS. SS
DATE JUL 05 2017

NO.	DATE	DESCRIPTION	BY
	12.19.16	DSA SUBMITTAL	

REVISIONS

DRAWN BY: S.L.
CHECKED BY: A.D.S.
DATE 05.12.17
JOB NO: 45461

SHEET TITLE

MECHANICAL TITLE-24 COMPLIANCE FORMS (BLDG. "A")

SHEET

M-9.3

DWG # 63 OF 82

Job No. 45461; File: T:\45461\mech\dsa\M9-3.dwg, Layout1, Ref. Dwg: 36871.dwg
Date Plotted: 05-11-17, 10:06am; Plot scale: 1'=1'-0"; Plot by: S.L. Plot: dsa; 05-11-17, 10:06am
05-12-17 DSA SUBMITTAL

STATE OF CALIFORNIA

ENVELOPE COMPONENT APPROACH

CEC-NRCC-ENV-01-E (Revised 05/15) CALIFORNIA ENERGY COMMISSION

CERTIFICATE OF COMPLIANCE	NRCC-ENV-01-E
Envelope Component Approach	(Page 1 of 4)
Project Name: Math & Science Complex - Ventura College Bldg B and C	Date Prepared: 7/7/2016

A. GENERAL INFORMATION

1	Project Location:	4667 Telegraph Road,	6	Compliance Method:	☒ Component ☐ Unconditioned (file Affidavit)
2	CA City and Zip Code:	Ventura, 93003	7	Building Front Orientation (deg or cardinal):	90 deg
3	Climate Zone:	6	8	Phase of construction	☐ New Construction ☐ Addition ☐ Alteration
4	Total Conditioned Floor Area:	30,702	9	Building Type(s)	☒ Nonresidential ☐ High-Rise Residential ☐ Hotel/Motel Guest Room
5	☐ Schools (Public School) ☐ Relocatable Public School Bldg. ☒ Conditioned Spaces ☐ Unconditioned Spaces ☐ Skylight Area for Large Enclosed Space > 5000 ft² (If checked include the NRCC-ENV-04-E with submittal)				

B. ENVELOPE DETAILS – Framed

1 Tag/ID	2 Assembly Type	3 Frame Material	4 Frame Depth	5 Frame Spacing	6 Appendix JA4 Reference	7 Cavity R-value	8 Continuous Insulation R-value	9 Proposed U-Factor	10 Required U-Factor From Tables, B, C, D	11 Field Inspection Comments
1	Wall	Wood	2x4 @ 16		4.3.1-A2	11	0.0	0.110	0.110	R-11 Wall
2	Roof	Wood	2x4 @ 16		4.2.1-A4	19	0.0	0.049	0.049	R-19 Roof Attic
3	Floor	Wood	2x6 @ 16		4.4.1-A4	19	0.0	0.037	0.037	R-19 Floor Crawlspace

C. ENVELOPE DETAILS – Non-framed

1 Tag/ID	2 Assembly Type	3 Assembly Materials	4 Thickness (inches)	5 Interior or Core Insulation R-value	6 Continuous Insulation R-value	7 Appendix JA4 Reference	8 Proposed U-Factor	9 Required U-Factor from Tables, B, C, D	10 Field Inspection Comments

D. ENVELOPE DETAILS – Mass

1 Tag/ID	2 Mass Type	3 Density (lb/ft³)	4 Mass Thickness (inches)	5 Furring Strip Thickness (inches)	6 Interior Insulation R-value	7 Exterior Insulation R-value	8 Appendix JA4 Reference	9 Proposed Insulation U-factor	10 Required U-Factor from Tables, B, C, D	11 Field Inspection Comments

CA Building Energy Efficiency Standards - 2013 Nonresidential Compliance May 2015

STATE OF CALIFORNIA

ENVELOPE COMPONENT APPROACH

CEC-NRCC-ENV-01-E (Revised 05/15) CALIFORNIA ENERGY COMMISSION

CERTIFICATE OF COMPLIANCE	NRCC-ENV-01-E
Envelope Component Approach	(Page 1 of 4)
Project Name: Math & Science Complex - Ventura College Bldg B and C	Date Prepared: 7/7/2016

A. GENERAL INFORMATION

1	Project Location:	4667 Telegraph Road,	6	Compliance Method:	☒ Component ☐ Unconditioned (file Affidavit)
2	CA City and Zip Code:	Ventura, 93003	7	Building Front Orientation (deg or cardinal):	90 deg
3	Climate Zone:	6	8	Phase of construction	☐ New Construction ☐ Addition ☐ Alteration
4	Total Conditioned Floor Area:	30,702	9	Building Type(s)	☒ Nonresidential ☐ High-Rise Residential ☐ Hotel/Motel Guest Room
5	☐ Schools (Public School) ☐ Relocatable Public School Bldg. ☒ Conditioned Spaces ☐ Unconditioned Spaces ☐ Skylight Area for Large Enclosed Space > 5000 ft² (If checked include the NRCC-ENV-04-E with submittal)				

B. ENVELOPE DETAILS – Framed

1 Tag/ID	2 Assembly Type	3 Frame Material	4 Frame Depth	5 Frame Spacing	6 Appendix JA4 Reference	7 Cavity R-value	8 Continuous Insulation R-value	9 Proposed U-Factor	10 Required U-Factor From Tables, B, C, D	11 Field Inspection Comments
4	Floor	Wood	2x12 @ 1(		4.4.1-A1	0	0.0	0.097	0.097	Default Floor Crawlspac

C. ENVELOPE DETAILS – Non-framed

1 Tag/ID	2 Assembly Type	3 Assembly Materials	4 Thickness (inches)	5 Interior or Core Insulation R-value	6 Continuous Insulation R-value	7 Appendix JA4 Reference	8 Proposed U-Factor	9 Required U-Factor from Tables, B, C, D	10 Field Inspection Comments

D. ENVELOPE DETAILS – Mass

1 Tag/ID	2 Mass Type	3 Density (lb/ft³)	4 Mass Thickness (inches)	5 Furring Strip Thickness (inches)	6 Interior Insulation R-value	7 Exterior Insulation R-value	8 Appendix JA4 Reference	9 Proposed Insulation U-factor	10 Required U-Factor from Tables, B, C, D	11 Field Inspection Comments

CA Building Energy Efficiency Standards - 2013 Nonresidential Compliance May 2015

STATE OF CALIFORNIA

ENVELOPE COMPONENT APPROACH

CEC-NRCC-ENV-01-E (Revised 05/15) CALIFORNIA ENERGY COMMISSION

CERTIFICATE OF COMPLIANCE	NRCC-ENV-01-E
Envelope Component Approach	(Page 2 of 4)
Project Name: Math & Science Complex - Ventura College Bldg B and C	Date Prepared: 7/7/2016

E. ROOFING PRODUCTS (COOL ROOF)

1 Mass Roof 25 lb ft2 or greater	2 Roof Pitch	3 CRRC Product ID Number	4 Product Type	5 Proposed Aged Solar Reflectance	6 Proposed Thermal Emittance	7 Proposed SRI² (Optional)	8 Minimum Required Aged Solar Reflectance	9 Minimum Required Thermal Emittance	10 Minimum Required SRI (optional)	11 Comments
☐				☐¹						
☐				☐¹						
☐				☐¹						

☐ An aged solar reflectance less than 0.63 is allowed provided the maximum roof / ceiling U-factor in TABLE 140.3 is not exceeded

☐ High-rise residential buildings and Hotels and Motels with low-sloped roofs in Climate Zones 1 through 8, 12 and 16 are exempted from aged Solar Reflectance and emittance requirements.

☐ High-rise residential buildings and Hotels and Motels with steep-sloped roofs in Climate Zones 1 and 16 are exempt from aged Solar Reflectance and emittance requirements.

☐ The roof area covered by building integrated photovoltaic panels and building integrated solar thermal panels are exempt from aged Solar Reflectance and emittance requirements

To apply **Liquid Field Applied Coatings,** the coating must be applied across the entire roof surface and meet the dry mil thickness or coverage recommended by the coatings manufacturer and meet minimum performance requirements listed in §110.8(i)4. Select the applicable coating:

☐ Aluminum-Pigmented Asphalt Roof Coating ☐ Cement-Based Roof Coating ☐ Other ____________

NOTES:

1. *Check the box if the aged Solar reflectance was not available in the Cool Roof Rating Council's Rated Product Directory, Then use the* equation in Section 110.8(i)2 where the *Initial Reflectance value from the same directory and use the equation (0.2+B($\rho_{initial}$ – 0.2) to obtain a calculated aged value. Where ρ is the initial Solar Reflectance and B is either set to 0.65 for Field-Applied Coatings or it is set to 0.70 for all other roofing products other than Field-Applied Coating.*
2. *Calculate the SRI Value by using the SRI-Worksheet at (TBD) and enter the resulting value in the SRI Column above and attach a copy for the SRI-Worksheet NRCC-ENV-03-E to the to this form.*

F. Air Barrier

1 NameName	2 Air Barrier Material Type	3 Air Barrier Assembly Type	4 Whole Building Air Leakage Testing	5 Comments

CA Building Energy Efficiency Standards - 2013 Nonresidential Compliance May 2015

STATE OF CALIFORNIA

ENVELOPE COMPONENT APPROACH

CEC-NRCC-ENV-01-E (Revised 05/15) CALIFORNIA ENERGY COMMISSION

CERTIFICATE OF COMPLIANCE	NRCC-ENV-01-E
Envelope Component Approach	(Page 3 of 4)
Project Name: Math & Science Complex - Ventura College Bldg B and C	Date Prepared: 7/7/2016

G. FENESTRATION PROPOSED AREAS AND EFFICIENCIES

1 Tag/ID	2 Fenestration Type	3 Surface Area	4 Orientation N, S, W, E or Roof	5 # of Panes	6 Max U-Factor	7 Overhang	8 Max (R)SHGC	9 Min VT	10 Label	11 Conditions Status	12 Comments

H. ENVELOPE MANDATORY MEASURES

Indicate location on building plans of Mandatory Envelope Measures Note Block: ENV-MM

INSTRUCTIONS TO APPLICANT ENVELOPE COMPLIANCE & WORKSHEETS (check box if worksheet are included)

For detailed instructions on the use of this and all Energy Efficiency Standards compliance forms, please refer to the Nonresidential Compliance Manual.

- ☒ NRCC-ENV-01-E Certificate of Compliance. Required on plans for all submittals.
- ☐ NRCC-ENV-04-E Use when minimum skylight requirements for large enclosed spaces are required in climate zones 2 through 15. Optional on plans.

CA Building Energy Efficiency Standards - 2013 Nonresidential Compliance May 2015

STATE OF CALIFORNIA

ENVELOPE COMPONENT APPROACH

CEC-NRCC-ENV-01-E (Revised 05/15) CALIFORNIA ENERGY COMMISSION

CERTIFICATE OF COMPLIANCE	NRCC-ENV-01-E
Envelope Component Approach	(Page 4 of 4)
Project Name: Math & Science Complex - Ventura College Bldg B and C	Date Prepared: 7/7/2016

DOCUMENTATION AUTHOR'S DECLARATION STATEMENT

1. I certify that this Certificate of Compliance documentation is accurate and complete.

Documentation Author Name: Arnel B. de Silva, P.E., LEED AP BD+C	Documentation Author Signature:
Company: J & S Consulting Engineers	Signature Date: 7/7/2016
Address: 3111 Winona Ave., Suite 102	CEA/ HERS Certification Identification (if applicable): M22816
City/State/Zip: Burbank, CA 91504	Phone: (818)841 0303

RESPONSIBLE PERSON'S DECLARATION STATEMENT

I certify the following under penalty of perjury, under the laws of the State of California:

1. The information provided on this Certificate of Compliance is true and correct.
2. I am eligible under Division 3 of the Business and Professions Code to accept responsibility for the building design or system design identified on this Certificate of Compliance (responsible designer).
3. The energy features and performance specifications, materials, components, and manufactured devices for the building design or system design identified on this Certificate of Compliance conform to the requirements of Title 24, Part 1 and Part 6 of the California Code of Regulations.
4. The building design features or system design features identified on this Certificate of Compliance are consistent with the information provided on other applicable compliance documents, worksheets, calculations, plans and specifications submitted to the enforcement agency for approval with this building permit application.
5. I will ensure that a completed signed copy of this Certificate of Compliance shall be made available with the building permit(s) issued for the building, and made available to the enforcement agency for all applicable inspections. I understand that a completed signed copy of this Certificate of Compliance is required to be included with the documentation the builder provides to the building owner at occupancy.

Responsible Designer Name: Arnel de Silva, P.E.	Responsible Designer Signature: Arnel de Silva
Company: J & S Consulting Engineers, Inc.	Date Signed: 5/12/17
Address: 3111 Winona Avenue, Suite 102	License: M22816
City/State/Zip: Burbank,, CA 91504	Phone: 818-841-0303

CA Building Energy Efficiency Standards - 2013 Nonresidential Compliance May 2015

STATE OF CALIFORNIA

FENESTRATION WORKSHEET

CEC-NRCC-ENV-02-E (Revised 05/15) CALIFORNIA ENERGY COMMISSION

CERTIFICATE OF COMPLIANCE	NRCC-ENV-02-E
Fenestration Worksheet	(Page 1 of 3)
Project Name: Math & Science Complex - Ventura College Bldg B and C	Date Prepared: 7/7/2016

A. WINDOWS DETAILS Worksheet *§140.3(a)5B and C*

NOTE: Newly installed fenestration shall have a certified NFRC Label Certificate or use the CEC default tables found in Table 116-A and Table 116B. Site-built fenestration less than 1,000 ft², or more than or equal to1,000 ft² see Reference Nonresidential Appendix NA6.

1 Tag/ID	2 Window Type (e.g., Window-1)	3 Surface Area	4 U-Factor Proposed	5 U-Factor Allowed	6 SHGC Proposed	7 SHGC Allowed	8 VT Proposed	9 VT Allowed	10 H	11 V	12 H/V	13 (R)SHGC Proposed	14 Max (R)SHGC Allowed
1	Window	784	1.190	1.190	0.830	0.830	0.876	0.99					
2	Window	288	1.190	1.190	0.830	0.830	0.876	0.99					
3	Window	384	1.190	1.190	0.830	0.830	0.876	0.99					
4	Window	256	1.190	1.190	0.830	0.830	0.876	0.99					

B. WEST WINDOW AREA CALCULATION See §140.3(a)5A in the Energy Standards

A. **Gross West** Exterior Wall Area	3,749	ft² x 0.40 =	1,500 ft²	40% of **Gross West Facing** Exterior Wall Area; or
B. **West** Display Linear Perimeter	0	FT x 6 ft =	0 ft²	**West** Display Perimeter Area
C. Enter Larger of A or B			1,500 ft²	Maximum Standard **West** Area
D. Enter Proposed **West** Window Area			288 ft²	Proposed **West** Window Area

*Note: If the PROPOSED **WEST** WINDOW AREA is greater than the MAXIMUM STANDARD **WEST** AREA then the envelope component approach may not be used.*

C. WINDOW AREA CALCULATION for all other orientations other than West - See §140.3(a)5A in the Energy Standards

E. Gross Exterior Wall Area	56,196	ft² x 0.40 =	22,478 ft²	40% of Gross Exterior Wall Area or
F. Linear Display Perimeter	0	FT x 6 ft =	0 ft²	Display Perimeter Area
G. Enter The Larger of E or F			22,478 ft²	Maximum Standard Area
H. Enter Proposed Window Area			1,424 ft²	Proposed Window Area

Note: If the PROPOSED WINDOW AREA is greater than the MAXIMUM STANDARD AREA then the envelope component approach may not be used.

CA Building Energy Efficiency Standards - 2013 Nonresidential Compliance May 2015

STATE OF CALIFORNIA

FENESTRATION WORKSHEET

CEC-NRCC-ENV-02-E (Revised 05/15) CALIFORNIA ENERGY COMMISSION

CERTIFICATE OF COMPLIANCE	NRCC-ENV-02-E
Fenestration Worksheet	(Page 1 of 3)
Project Name: Math & Science Complex - Ventura College Bldg B and C	Date Prepared: 7/7/2016

A. WINDOWS DETAILS Worksheet *§140.3(a)5B and C*

NOTE: Newly installed fenestration shall have a certified NFRC Label Certificate or use the CEC default tables found in Table 116-A and Table 116B. Site-built fenestration less than 1,000 ft², or more than or equal to1,000 ft² see Reference Nonresidential Appendix NA6.

1 Tag/ID	2 Window Type (e.g., Window-1)	3 Surface Area	4 U-Factor Proposed	5 U-Factor Allowed	6 SHGC Proposed	7 SHGC Allowed	8 VT Proposed	9 VT Allowed	10 H	11 V	12 H/V	13 (R)SHGC Proposed	14 Max (R)SHGC Allowed
5	Skylight	36	1.190	1.190	0.830	0.830	0.804	0.99					

B. WEST WINDOW AREA CALCULATION See §140.3(a)5A in the Energy Standards

A. **Gross West** Exterior Wall Area	3,749	ft² x 0.40 =	1,500 ft²	40% of **Gross West Facing** Exterior Wall Area; or
B. **West** Display Linear Perimeter	0	FT x 6 ft =	0 ft²	**West** Display Perimeter Area
C. Enter Larger of A or B			1,500 ft²	Maximum Standard **West** Area
D. Enter Proposed **West** Window Area			288 ft²	Proposed **West** Window Area

*Note: If the PROPOSED **WEST** WINDOW AREA is greater than the MAXIMUM STANDARD **WEST** AREA then the envelope component approach may not be used.*

C. WINDOW AREA CALCULATION for all other orientations other than West - See §140.3(a)5A in the Energy Standards

E. Gross Exterior Wall Area	56,196	ft² x 0.40 =	22,478 ft²	40% of Gross Exterior Wall Area or
F. Linear Display Perimeter	0	FT x 6 ft =	0 ft²	Display Perimeter Area
G. Enter The Larger of E or F			22,478 ft²	Maximum Standard Area
H. Enter Proposed Window Area			1,424 ft²	Proposed Window Area

Note: If the PROPOSED WINDOW AREA is greater than the MAXIMUM STANDARD AREA then the envelope component approach may not be used.

CA Building Energy Efficiency Standards - 2013 Nonresidential Compliance May 2015

STATE OF CALIFORNIA

FENESTRATION WORKSHEET

CEC-NRCC-ENV-02-E (Revised 05/15) CALIFORNIA ENERGY COMMISSION

CERTIFICATE OF COMPLIANCE	NRCC-ENV-02-E
Fenestration Worksheet	(Page 2 of 3)
Project Name: Math & Science Complex - Ventura College Bldg B and C	Date Prepared: 7/7/2016

D. SKYLIGHT AREA CALCULATION See §143(a)6A in the Energy Standards

	ACTUAL GROSS ROOF AREA		STANDARD ALLOWED SKYLIGHT AREA
A. IF Atrium/Skylight Height is ≤ 55 ft; or	11,714	ft² x 0.05 =	586 ft²
B. IF Atrium/Skylight Height is > 55 ft		ft² x 0.10 =	ft²
C. Proposed Skylight Area (from plans)		36 ft²	
D. Skylight SSR %[1,2] = Proposed Skylight Area Divided by Actual Gross Roof Area =		0.3 %	

1. *If the SKYLIGHT SSR % is less than or equal to 5% then choose the appropriate column in Table 140.3-B and C and row in Table 140.3-D.*
2. *If the SKYLIGHT SSR % is greater than 5% then the Envelope Component Approach may not be used.*

E. RELOCATABLE PUBLIC SCHOOL BUILDINGS - See Section140.3(a)8 in the Energy Standards

Option 1	
☐ For Specific Climate Zone, use Table 140.3-B - Prescriptive Envelope Criteria.	☐ Specific Climate Zone Metal Identification Label – Place two labels on each relocatable school building and indicate on the building plans.
	Indicate location from the building plans:
Option 2	
☐ For Any (All) Climate Zone, use Table 140.3-D - Prescriptive Envelope Criteria.	☐ Any (All) Climate Zone Metal Identification Label - Place two labels on each relocatable school building and indicate on the building plans.
	Indicate location from the building plans:

CA Building Energy Efficiency Standards - 2013 Nonresidential Compliance May 2015

STATE OF CALIFORNIA

FENESTRATION WORKSHEET

CEC-NRCC-ENV-02-E (Revised 05/15) CALIFORNIA ENERGY COMMISSION

CERTIFICATE OF COMPLIANCE	NRCC-ENV-02-E
Fenestration Worksheet	(Page 3 of 3)
Project Name: Math & Science Complex - Ventura College Bldg B and C	Date Prepared: 7/7/2016

DOCUMENTATION AUTHOR'S DECLARATION STATEMENT

1. I certify that this Certificate of Compliance documentation is accurate and complete.

Documentation Author Name: Arnel B. de Silva, P.E., LEED AP BD+C	Documentation Author Signature:
Company: J & S Consulting Engineers	Signature Date: 7/7/2016
Address: 3111 Winona Ave., Suite 102	CEA/ HERS Certification Identification (if applicable): M22816
City/State/Zip: Burbank, CA 91504	Phone: (818)841 0303

RESPONSIBLE PERSON'S DECLARATION STATEMENT

I certify the following under penalty of perjury, under the laws of the State of California:

1. The information provided on this Certificate of Compliance is true and correct.
2. I am eligible under Division 3 of the Business and Professions Code to accept responsibility for the building design or system design identified on this Certificate of Compliance (responsible designer).
3. The energy features and performance specifications, materials, components, and manufactured devices for the building design or system design identified on this Certificate of Compliance conform to the requirements of Title 24, Part 1 and Part 6 of the California Code of Regulations.
4. The building design features or system design features identified on this Certificate of Compliance are consistent with the information provided on other applicable compliance documents, worksheets, calculations, plans and specifications submitted to the enforcement agency for approval with this building permit application.
5. I will ensure that a completed signed copy of this Certificate of Compliance shall be made available with the building permit(s) issued for the building, and made available to the enforcement agency for all applicable inspections. I understand that a completed signed copy of this Certificate of Compliance is required to be included with the documentation the builder provides to the building owner at occupancy.

Responsible Designer Name:	Responsible Designer Signature: Arnel de Silva
Company: J & S Consulting Engineers, Inc.	Date Signed: 5/12/17
Address: 3111 Winona Avenue, Suite 102	License: M22816
City/State/Zip: Burbank,, CA 91504	Phone: 818-841-0303

CA Building Energy Efficiency Standards - 2013 Nonresidential Compliance May 2015

STATE OF CALIFORNIA

ENVELOPE – DAYLIT ZONE WORKSHEET

CEC-NRCC-ENV-04-E (Revised 05/15) CALIFORNIA ENERGY COMMISSION

CERTIFICATE OF COMPLIANCE	NRCC-ENV-04-E
Envelope - Daylit Zone Worksheet	(Page 1 of 2)
Project Name: Math & Science Complex - Ventura College Bldg B and C	Date Prepared: 7/7/2016

*This worksheet applies only to buildings with three or fewer stories, climate zones 2 through 15, having an enclosed conditioned or unconditioned space > 5,000 ft² that is directly under a roof with a ceiling height > 15 ft and ≥ 0.5 watts per square foot, unless exempted by the **EXCEPTIONS** in §140.3(c).*

A. MINIMUM SKYLIGHT AREA FOR LARGE ENCLOSED SPACES (definitions in §130.1(d), requirements in §140.3(c)

1. Enter building plan reference page(s) for large enclosed space ____________; and
2. Enter building plan reference page(s) for daylit zone plans for enclosed space ________ or attach a separate daylit zone design plan with this form; then **Go to Step 1 below.**

B. CALCULATE DAYLIT AREA

The minimum Skylit Zone requirements can be met by using either Skylit Daylit Zones or Primary Sidelit Daylit Zones or Combinations.

Step 1 Calculate the minimum prescriptively required total Daylit Zone Area, per§140.3(c)1

1.	Floor area of enclosed space	A	0	ft²	Floor area
2.	Minimum prescriptively required total daylit area is (0.75 x floor area (A) – the area of any permanent obstructions), see §140.3(c)1 &§130.1(d)1A for additional details.	B	0	ft²	Minimum prescriptively required Total Daylit Zone Area
Step 2 Calculate Total Daylit Zone Area					
3.	Skylit Daylit Zone Area, determined in accordance with §130.1(d)1A and as shown on the building plans.	C	0	ft²	Skylit Daylit Zone Area
4.	Primary Sidelit Daylit Zone Area determined in accordance with §130.1(d)1B and as shown on the building plans.	D	0	ft²	Primary Sidelit Daylit Zone Area
5.	Areas of Primary Sidelit Daylit Zone Area that overlap with the Skylit Daylit Zone Area	E	0	ft²	Overlap Zone Area
6.	Total daylit Zone Area F = C+D-E	F	0	ft²	Total Daylit Zone Area

C. COMPARE DAYLIT ZONE AREA

Step 1 Compare

1. Check if Total Daylit Zone Area (F) is equal to or greater than Minimum Prescriptively Required Daylit Zone Area (B). **Space PASSES if** F ≥ B.

CA Building Energy Efficiency Standards - 2013 Nonresidential Compliance May 2015

STATE OF CALIFORNIA

ENVELOPE – DAYLIT ZONE WORKSHEET

CEC-NRCC-ENV-04-E (Revised 05/15) CALIFORNIA ENERGY COMMISSION

CERTIFICATE OF COMPLIANCE	NRCC-ENV-04-E
Envelope - Daylit Zone Worksheet	(Page 2 of 2)
Project Name: Math & Science Complex - Ventura College Bldg B and C	Date Prepared: 7/7/2016

DOCUMENTATION AUTHOR'S DECLARATION STATEMENT

1. I certify that this Certificate of Compliance documentation is accurate and complete.

Documentation Author Name: Arnel B. de Silva, P.E., LEED AP BD+C	Documentation Author Signature:
Company: J & S Consulting Engineers	Signature Date: 7/7/2016
Address: 3111 Winona Ave., Suite 102	CEA/ HERS Certification Identification (if applicable): M22816
City/State/Zip: Burbank, CA 91504	Phone: (818)841 0303

RESPONSIBLE PERSON'S DECLARATION STATEMENT

I certify the following under penalty of perjury, under the laws of the State of California:

1. The information provided on this Certificate of Compliance is true and correct.
2. I am eligible under Division 3 of the Business and Professions Code to accept responsibility for the building design or system design identified on this Certificate of Compliance (responsible designer).
3. The energy features and performance specifications, materials, components, and manufactured devices for the building design or system design identified on this Certificate of Compliance conform to the requirements of Title 24, Part 1 and Part 6 of the California Code of Regulations.
4. The building design features or system design features identified on this Certificate of Compliance are consistent with the information provided on other applicable compliance documents, worksheets, calculations, plans and specifications submitted to the enforcement agency for approval with this building permit application.
5. I will ensure that a completed signed copy of this Certificate of Compliance shall be made available with the building permit(s) issued for the building, and made available to the enforcement agency for all applicable inspections. I understand that a completed signed copy of this Certificate of Compliance is required to be included with the documentation the builder provides to the building owner at occupancy.

Responsible Designer Name: Arnel de Silva, P.E.	Responsible Designer Signature: Arnel de Silva
Company: J & S Consulting Engineers, Inc.	Date Signed: 5/12/17
Address: 3111 Winona Avenue, Suite 102	License: M22816
City/State/Zip: Burbank,, CA 91504	Phone: 818-841-0303

CA Building Energy Efficiency Standards - 2013 Nonresidential Compliance May 2015

STATE OF CALIFORNIA

AREA WEIGHTED AVERAGE CALCULATION WORKSHEET

CEC-NRCC-ENV-06-E (Revised 05/15) CALIFORNIA ENERGY COMMISSION

CERTIFICATE OF COMPLIANCE	NRCC-ENV-06-E
Area Weighted Average Calculation Worksheet	(Page 1 of 2)
Project Name: Math & Science Complex - Ventura College Bldg B and C	Date: 7/7/2016

This worksheet is used to calculate the area weighted-average values for a building envelope features such as, walls, roofs, floors, mass, and fenestration/glazing U-factors, Relative Solar Heat Gain Coefficient (RSHGC) or Visible Transmittance (VT) for the prescriptive compliance approach. R-values can never be area weighted averaged. Only U-factors, SHGC, RSHGC or VT can be used. When a window has an overhang, calculate the RSHGC first (see Equation 140.3-A), then determine the weighted average if need be.

Weighted averaging is used when there is more than one level of insulation or more than one type of window and one or more type of fenestration which would not meet prescriptive compliance requirements. Each fenestration type (e.g., vertical windows, skylights, dynamic glazing, and window films) are treated independently or cannot be combined. Weight averaging is not allowed for chromogenic glazing.

A. Area Weighted Average Calculation

Item/ Tag No.	Type 1 Value¹		Type 1 Area²		Type 2 Value¹		Type 2 Area²		Type 3 Value¹		Type 3 Area²		Total Area		Area Weighted Average Value³
	[(____)	x	(____)	+	(____)	x	(____)	+	(____)	x	(____)]	÷		=	
	[(____)	x	(____)	+	(____)	x	(____)	+	(____)	x	(____)]	÷		=	
	[(____)	x	(____)	+	(____)	x	(____)	+	(____)	x	(____)]	÷		=	
	[(____)	x	(____)	+	(____)	x	(____)	+	(____)	x	(____)]	÷		=	
	[(____)	x	(____)	+	(____)	x	(____)	+	(____)	x	(____)]	÷		=	
	[(____)	x	(____)	+	(____)	x	(____)	+	(____)	x	(____)]	÷		=	
	[(____)	x	(____)	+	(____)	x	(____)	+	(____)	x	(____)]	÷		=	
	[(____)	x	(____)	+	(____)	x	(____)	+	(____)	x	(____)]	÷		=	
	[(____)	x	(____)	+	(____)	x	(____)	+	(____)	x	(____)]	÷		=	
	[(____)	x	(____)	+	(____)	x	(____)	+	(____)	x	(____)]	÷		=	
	[(____)	x	(____)	+	(____)	x	(____)	+	(____)	x	(____)]	÷		=	
	[(____)	x	(____)	+	(____)	x	(____)	+	(____)	x	(____)]	÷		=	
	[(____)	x	(____)	+	(____)	x	(____)	+	(____)	x	(____)]	÷		=	
	[(____)	x	(____)	+	(____)	x	(____)	+	(____)	x	(____)]	÷		=	

1. *"Value" can be replaced throughout the formula by "U-factor", "Relative Solar Heat Gain Coefficient, Visible Transmittance" or any other value that varies throughout Nonresidential and is appropriate to weight average. Mixture of different units not allowed.*
2. *"Area" can be replaced throughout the formula by "Length" or any other unit of measure used for the value being averaged. Mixture of different units not allowed.*
3. *Enter the above Weighted Average Value on the NRCC-ENV-01-E and NRCC-ENV-02-E form and attach this sheet.*

Area Weighted Averages	Tag	Allowed	Tag	Proposed	Complies
Vertical Fenestration U-Factor	VFUa	n/a	VFUp	n/a	
Vertical Fenestration SHGC	VFSa	n/a	VFSp	n/a	
Vertical Fenestration VT	VFVa	n/a	VFVp	n/a	
Skylight U-Factor	SUa	n/a	SUp	n/a	
Skylight SHGC	SSa	n/a	SSp	n/a	
Skylight VT	SVa	n/a	SVp	n/a	
Wall U-Factor	WUa	n/a	WUp	n/a	
Roof U-Factor	RUa	n/a	RUp	n/a	
Door U-Factor	DUa	n/a	DUp	n/a	
Floor U-Factor	FUa	n/a	FUp	n/a	

CA Building Energy Efficiency Standards - 2013 Nonresidential Compliance May 2015

J & S CONSULTING ENGINEERS, INC.
ELECTRICAL ▫ MECHANICAL
FIRE PROTECTION
3111 Winona Ave., #102
Burbank, Ca 91504
Tel.: (818) 841-0303
Fax: (818) 841-8531
470 Helga Ct. Unit A
Newbury Park, Ca. 91320
Tel. (818) 398-5793
Fax: (818) 841-8531
www.jandsconsulting.com
E-Mail: jsmail@jandsconsulting.com

PROJECT No. 45461

LICENSED ARCHITECT JEAN ANN AMADOR C-22205 APRIL 30, 2019 RENEWAL DATE STATE OF CALIFORNIA

REGISTERED PROFESSIONAL ENGINEER ARNEL B. DE SILVA No. M22816 EXPIRES 09-30-18 MECHANICAL STATE OF CALIFORNIA

VENTURA COLLEGE

4667 TELEGRAPH ROAD, VENTURA , CALIFORNIA, 93003
VENTURA COUNTY COMMUNITY COLLEGE DISTRICT
MATH & SCIENCE COMPLEX

IDENTIFICATION STAMP
DIV. OF THE STATE ARCHITECT
OFFICE OF REGULATION SERVICES
APPL. 03- 117754
AC __ FLS __ SS __
DATE JUL 0 5 2017

NO.	DATE	DESCRIPTION	BY
	12.19.16	DSA SUBMITTAL	

REVISIONS

DRAWN BY:	S.L.
CHECKED BY:	A.D.S.
DATE	05.12.17
JOB NO:	45461

SHEET TITLE

MECHANICAL TITLE-24 COMPLIANCE FORMS (BLDG. "B & C")

SHEET

M-9.4

DWG # 64 OF 81

Job No. 45461; FILE: N:\45461-VenturaColl\M9-4.dwg; Layout1 Ref. Files: SHEET.dwg Plot Date: 05-11-17, 10:51am; Plot scale: 1=1-PS By: S.L. Prev. plot: 05-11-17, 10:23am

05-12-17 DSA SUBMITTAL

STATE OF CALIFORNIA
AREA WEIGHTED AVERAGE CALCULATION WORKSHEET

CEC-NRCC-ENV-05-E (Revised 05/15) — CALIFORNIA ENERGY COMMISSION

CERTIFICATE OF COMPLIANCE	NRCC-ENV-06-E
Area Weighted Average Calculation Worksheet	(Page 2 of 2)
Project Name: Math & Science Complex - Ventura College Bldg B and C	Date: 7/7/2016

DOCUMENTATION AUTHOR'S DECLARATION STATEMENT

1. I certify that this Certificate of Compliance documentation is accurate and complete.

Documentation Author Name:	Amel B. de Silva, P.E., LEED AP BD+C	Documentation Author Signature:	
Company:	J & S Consulting Engineers	Signature Date:	7/7/2016
Address:	3111 Winona Ave., Suite 102	CEA/HERS Certification Identification (If applicable):	
City/State/Zip:	Burbank, CA 91504	Phone:	(818)841 0303

RESPONSIBLE PERSON'S DECLARATION STATEMENT

I certify the following under penalty of perjury, under the laws of the State of California:
1. The information provided on this Certificate of Compliance is true and correct.
2. I am eligible under Division 3 of the Business and Professions Code to accept responsibility for the building design or system design identified on this Certificate of Compliance (responsible designer).
3. The energy features and performance specifications, materials, components, and manufactured devices for the building design or system design identified on this Certificate of Compliance conform to the requirements of Title 24, Part 1 and Part 6 of the California Code of Regulations.
4. The building design features or system design features identified on this Certificate of Compliance are consistent with the information provided on other applicable compliance documents, worksheets, calculations, plans and specifications submitted to the enforcement agency for approval with this building permit application.
5. I will ensure that a completed signed copy of this Certificate of Compliance shall be made available with the building permit(s) issued for the building, and made available to the enforcement agency for all applicable inspections. I understand that a completed signed copy of this Certificate of Compliance is required to be included with the documentation the builder provides to the building owner at occupancy.

Responsible Designer Name:	Amel de Silva, P.E.	Responsible Designer Signature:	
Company:	J & S Consulting Engineers, Inc.	Date Signed:	5/31/17
Address:	3111 Winona Avenue, Suite 102	License:	M22816
City/State/Zip:	Burbank., CA 91504	Phone:	818-841-0303

CA Building Energy Efficiency Standards - 2013 Nonresidential Compliance — May 2015

ENVELOPE MANDATORY MEASURES: NONRESIDENTIAL — ENV-MM

Project Name: *Math & Science Complex - Ventura College Bldg B and C* — Date: *7/7/2016*

DESCRIPTION

Building Envelope Measures:

§110.6(a):	Installed insulating material shall have been certified by the manufacturer to comply with the California Quality Standards for insulating material, Title 20 Chapter 4, Article 3.
§110.6(c):	All Insulating Materials shall be installed in compliance with the flame spread rating and smoke density requirements of Sections 2602 and 707 of Title 24, Part 2.
§110.6(f):	The opaque portions of framed demising walls in nonresidential buildings shall have insulation with an installed R-value of no less than R-13 between framing members.
§110.7(a):	All Exterior Joints and openings in the building that are observable sources of air leakage shall be caulked, gasketed, weatherstripped or otherwise sealed.
§110.6(a):	Manufactured fenestration products and exterior doors shall have air infiltration rates not exceeding 0.3 cfm/ft.² of window area, 0.3 cfm/ft.² of door area for residential doors, 0.3 cfm/ft.² of door area for nonresidential single doors (swinging and sliding), and 1.0 cfm/ft.² for nonresidential double doors (swinging).
§110.6(a):	Fenestration U-factor shall be rated in accordance with NFRC 100, or the applicable default U-factor.
§110.6(a):	Fenestration SHGC shall be rated in accordance with NFRC 200, or NFRC 100 for site-built fenestration, or the applicable default SHGC.
§110.6(b):	Site Constructed Doors, Windows and Skylights shall be caulked between the unit and the building, and shall be weatherstripped (except for unframed glass doors and fire doors).

YES	NO	Form/Worksheet #	Title
☑	☐	NRCC-MCH-01-E (Part 1 of 3)	Certificate of Compliance, Declaration. Required on plans for all submittals.
☑	☐	NRCC-MCH-01-E (Part 2 of 3)	Certificate of Compliance, Required Acceptance Tests (MCH-02A to 11A). Required on plans for all submittals.
☑	☐	NRCC-MCH-01-E (Part 3 of 3)	Certificate of Compliance, Required Acceptance Tests (MCH-12A to 18A). Required on plans where applicable.
☑	☐	NRCC-MCH-02-E (Part 1 of 2)	Mechanical Dry Equipment Summary is required for all submittals with Central Air Systems. It is optional on plans.
☒	☐	NRCC-MCH-02-E (Part 2 of 2)	Mechanical Wet Equipment Summary is required for all submittals with chilled water, hot water or condenser water systems. It is optional on plans.
☑	☐	NRCC-MCH-03-E	Mechanical Ventilation and Reheat is required for all submittals with multiple zone heating and cooling systems. It is optional on plans.
☒	☐	NRCC-MCH-07-E (Part 1 of 2)	Power Consumption of Fans. Required on plans where applicable
☒	☐	NRCC-MCH-07-E (Part 2 of 2)	Power Consumption of Fans, Declaration. Required on plans where applicable

STATE OF CALIFORNIA
MECHANICAL SYSTEMS

CEC-MCH-01-E (Revised 05/15) — CALIFORNIA ENERGY COMMISSION

CERTIFICATE OF COMPLIANCE	NRCC-MCH-01-E
Mechanical Systems	(Page 1 of 4)
Project Name: Math & Science Complex - Ventura College Bldg B and C	Date Prepared: 7/7/2016

A. MECHANICAL COMPLIANCE FORMS & WORKSHEETS (check box if worksheet is included)

For detailed instructions on the use of this and all Energy Efficiency Standards compliance forms, refer to the 2013 Nonresidential Manual
Note: The Enforcement Agency may require all forms to be incorporated onto the building plans.

YES	NO	Form/Worksheet #	Title
☑	☐	NRCC-MCH-01-E (Part 1 of 3)	Certificate of Compliance, Declaration. Required on plans for all submittals.
☑	☐	NRCC-MCH-01-E (Part 2 of 3)	Certificate of Compliance, Required Acceptance Tests (MCH-02A to 11A). Required on plans for all submittals.
☑	☐	NRCC-MCH-01-E (Part 3 of 3)	Certificate of Compliance, Required Acceptance Tests (MCH-12A to 18A). Required on plans where applicable.
☑	☐	NRCC-MCH-02-E (Part 1 of 2)	Mechanical Dry Equipment Summary is required for all submittals with Central Air Systems. It is optional on plans.
☒	☐	NRCC-MCH-02-E (Part 2 of 2)	Mechanical Wet Equipment Summary is required for all submittals with chilled water, hot water or condenser water systems. It is optional on plans.
☑	☐	NRCC-MCH-03-E	Mechanical Ventilation and Reheat is required for all submittals with multiple zone heating and cooling systems. It is optional on plans.
☒	☐	NRCC-MCH-07-E (Part 1 of 2)	Power Consumption of Fans. Required on plans where applicable
☒	☐	NRCC-MCH-07-E (Part 2 of 2)	Power Consumption of Fans, Declaration. Required on plans where applicable

CA Building Energy Efficiency Standards - 2013 Nonresidential Compliance — May 2015

STATE OF CALIFORNIA
MECHANICAL SYSTEMS

CEC-MCH-01-E (Revised 05/15) — CALIFORNIA ENERGY COMMISSION

CERTIFICATE OF COMPLIANCE	NRCC-MCH-01-E
Mechanical Systems	(Page 2 of 4)
Project Name: Math & Science Complex Ventura College Bldg B and C	Date Prepared: 7/7/2016

B. MECHANICAL SYSTEMS ACCEPTANCE FORMS (check box for required forms)

Test Performed By:
Designer:
This form is to be used by the designer and attached to the plans. Listed below are all the acceptance tests for HVAC systems. The designer is required to check the applicable boxes for all acceptance tests that apply and list all equipment that requires an acceptance test. All equipment of the same type that requires a test, list the equipment description and the number of systems.
Installing Contractor:
The contractor who installed the equipment is responsible to either conduct the acceptance test them self or have a qualified entity run the test for them. If more than one person has responsibility for the acceptance testing, each person shall sign and submit the Certificate of Acceptance applicable to the portion of the construction or installation for which they are responsible.
Enforcement Agency:
Plancheck – The NRCC-MCH-01-E form is not considered a completed form and is not to be accepted by the building department unless the correct boxes are checked.
Inspector - Before occupancy permit is granted all newly installed process systems must be tested to ensure proper operations.

Test Description	MCH-02A	MCH-03A	MCH-04A	MCH-05A	MCH-06A	MCH-07A	MCH-08A	MCH-09A	MCH-10A	MCH-11A
Equipment Requiring Testing or Verification	# of Units	Outdoor Air	Single Zone Unitary	Air Distribution Ducts	Economizer Controls	Demand Control Ventilation (DCV)	Supply Fan VAV	Valve Leakage Test	Supply Water Temp. Reset	Hydronic System Variable Flow Control	Automatic Demand Shed Control
120 Ton Air Coo	1	☐	☐	☐	☐	☐	☐	☑	☑	☐	☐
Patterson-Kelley	4	☐	☐	☐	☐	☐	☐	☑	☑	☐	☐
Trane CSAA00	1	☑	☑	☐	☑	☑	☐	☐	☐	☐	☐
Seasons-4 AHX	1	☑	☑	☐	☑	☑	☐	☐	☐	☐	☐
Seasons-4 AHX	1	☑	☑	☐	☑	☑	☐	☐	☐	☐	☐
Seasons-4 AHX	1	☑	☑	☐	☑	☑	☐	☐	☐	☐	☐
Tranceclimate Cl	1	☑	☑	☐	☐	☑	☐	☐	☐	☐	☐
Trane FCCB04	4	☑	☑	☐	☐	☑	☐	☐	☐	☐	☐
BCHD054A1	1	☑	☑	☐	☐	☑	☐	☐	☐	☐	☐
Trane Horizon II	2	☑	☑	☐	☐	☑	☐	☐	☐	☐	☐

CA Building Energy Efficiency Standards - 2013 Nonresidential Compliance — May 2015

STATE OF CALIFORNIA
MECHANICAL SYSTEMS

CEC-MCH-01-E (Revised 05/15) — CALIFORNIA ENERGY COMMISSION

CERTIFICATE OF COMPLIANCE	NRCC-MCH-01-E
Mechanical Systems	(Page 3 of 4)
Project Name: Math & Science Complex - Ventura College Bldg B and C	Date Prepared: 7/7/2016

C. MECHANICAL HVAC ACCEPTANCE FORMS (check box for required forms)

Test Performed By:
Designer:
This form is to be used by the designer and attached to the plans. Listed below are all the acceptance tests for HVAC systems. The designer is required to check the applicable boxes for all acceptance tests that apply and list all equipment that requires an acceptance test. All equipment of the same type that requires a test, list the equipment description and the number of systems.
Installing Contractor:
The contractor who installed the equipment is responsible to either conduct the acceptance test them self or have a qualified entity run the test for them. If more than one person has responsibility for the acceptance testing, each person shall sign and submit the Certificate of Acceptance applicable to the portion of the construction or installation for which they are responsible.
The following tests require a
Enforcement Agency:
Plancheck – The NRCC-MCH-01-E form is not considered a completed form and is not to be accepted by the building department unless the correct boxes are checked.
Inspector - Before occupancy permit is granted all newly installed process systems must be tested to ensure proper operations.

Test Description	MCH-12A	MCH-13A	MCH-14A	MCH-15A	MCH-16A	MCH-17A	MCH-18A
Equipment Requiring Testing or Verification	# of units	Fault Detection & Diagnostics for DX Units	Automatic Fault Detection & Diagnostics for Air & Zone	Distributed Energy Storage DX AC Systems	Thermal Energy Storage (TES) Systems	Supply Air Temperature Reset Controls	Condenser Water Reset Controls	ECMS
120 Ton Air Coo	1	☐	☐	☐	☐	☐	☐	☐
Patterson-Kelley	4	☐	☐	☐	☐	☐	☐	☐
Trane CSAA00	1	☐	☐	☐	☐	☐	☐	☐
Seasons-4 AHX	1	☐	☐	☐	☐	☐	☐	☐
Seasons-4 AHX	1	☐	☐	☐	☐	☐	☐	☐
Tranceclimate Cl	1	☐	☐	☐	☐	☐	☐	☐
Trane FCCB04	1	☐	☐	☐	☐	☐	☐	☐
BCHD054A1	1	☐	☐	☐	☐	☐	☐	☐
Trane Horizon II	2	☐	☐	☐	☐	☐	☐	☐

CA Building Energy Efficiency Standards - 2013 Nonresidential Compliance — May 2015

STATE OF CALIFORNIA
MECHANICAL SYSTEMS

CEC-MCH-01-E (Revised 05/15) — CALIFORNIA ENERGY COMMISSION

CERTIFICATE OF COMPLIANCE	NRCC-MCH-01-E
Mechanical Systems	(Page 4 of 4)
Project Name: Math & Science Complex - Ventura College Bldg B and C	Date Prepared: 7/7/2016

DOCUMENTATION AUTHOR'S DECLARATION STATEMENT

1. I certify that this Certificate of Compliance documentation is accurate and complete.

Documentation Author Name:	Amel B. de Silva, P.E., LEED AP BD+C	Documentation Author Signature:	
Company:	J & S Consulting Engineers	Signature Date:	7/7/2016
Address:	3111 Winona Ave., Suite 102	CEA/HERS Certification Identification (If applicable):	M22816
City/State/Zip:	Burbank, CA 91504	Phone:	(818)841 0303

RESPONSIBLE PERSON'S DECLARATION STATEMENT

I certify the following under penalty of perjury, under the laws of the State of California:
1. The information provided on this Certificate of Compliance is true and correct.
2. I am eligible under Division 3 of the Business and Professions Code to accept responsibility for the building design or system design identified on this Certificate of Compliance (responsible designer).
3. The energy features and performance specifications, materials, components, and manufactured devices for the building design or system design identified on this Certificate of Compliance conform to the requirements of Title 24, Part 1 and Part 6 of the California Code of Regulations.
4. The building design features or system design features identified on this Certificate of Compliance are consistent with the information provided on other applicable compliance documents, worksheets, calculations, plans and specifications submitted to the enforcement agency for approval with this building permit application.
5. I will ensure that a completed signed copy of this Certificate of Compliance shall be made available with the building permit(s) issued for the building, and made available to the enforcement agency for all applicable inspections. I understand that a completed signed copy of this Certificate of Compliance is required to be included with the documentation the builder provides to the building owner at occupancy.

Responsible Designer Name:	Amel B. de Silva, P.E.	Responsible Designer Signature:	
Company:	J & S Consulting Engineers, Inc.	Date Signed:	5/31/17
Address:	3111 Winona Avenue, Suite 102	License:	
City/State/Zip:	Burbank, CA 91504	Phone:	(818) 841-0303

CA Building Energy Efficiency Standards - 2013 Nonresidential Compliance — May 2015

STATE OF CALIFORNIA
HVAC SYSTEM REQUIREMENTS

CEC-MCH-02-E (Revised 05/15) — CALIFORNIA ENERGY COMMISSION

CERTIFICATE OF COMPLIANCE	NRCC-MCH-02-E
HVAC Dry System Requirements	(Page 1 of 3)
Project Name: Math & Science Complex - Ventura College Bldg B and C	Date Prepared: 7/7/2016

A. Equipment Tags and System Description[1]		AH-1	AH-2	AH-3
B. MANDATORY MEASURES	*T-24 Sections*	*Reference to the Requirements in the Contract Documents[2]*		
Heating Equipment Efficiency[3]	110.1 or 110.2(a)			
Cooling Equipment Efficiency[3]	110.1 or 110.2(a)			
HVAC or Heat Pump Thermostats	110.2(b), 110.2(c)			
Furnace Standby Loss Control	110.2(d)			
Low leakage AHUs	110.2(f)			
Ventilation[4]	120.1(b)			
Demand Control Ventilation[5]	120.1(c)4			
Occupant Sensor Ventilation Control[6]	120.1(c)5, 120.2(e)3			
Shutoff and Reset Controls[7]	120.2(e)			
Outdoor Air and Exhaust Damper Control	120.2(f)			
Isolation Zones	120.2(g)			
Automatic Demand Shed Controls	120.2(h)			
Economizer FDD	120.2(i)			
Duct Insulation	120.4			
C. PRESCRIPTIVE MEASURES				
Equipment is sized in conformance with 140.4 (a & b)	140.4(a & b)	Y Y/N	Y Y/N	Y Y/N
Supply Fan Pressure Control	140.4(c)			
Simultaneous Heat/Cool[8]	140.4(d)			
Economizer	140.4(e)			
Heat and Cool Air Supply Reset	140.4(f)			
Electric Resistance Heating[9]	140.4(g)			
Duct Leakage Sealing and Testing.[10]	140.4(l)			

Notes:
1. *Provide equipment tags (e.g. AHU 1 to 10) and system description (e.g. Single Duct VAV reheat) as appropriate. Multiple units with common requirements can be grouped together.*
2. *Provide references to plans (i.e. Drawing Sheet Numbers) and/or specifications (including Section name/number and relevant paragraphs) where each requirement is specified. Enter "N/A" if the requirement is not applicable to this system.*
3. *The referenced plans and specifications must include all of the following information: equipment tag, equipment nominal capacity, Title 24 minimum efficiency requirements, and actual rated equipment efficiencies. Where multiple efficiency requirements are applicable (e.g. full- and part-load) include all. Where appliance standards apply (110.1), identify where equipment is required to be listed per Title 20 1601 et seq.*
4. *Identify where the ventilation requirements are documented for each central HVAC system. Include references to both central unit schedules and sequences of operation. If one or more space is naturally ventilated identify where this is documented in the plans and specifications. Multiple zone central air systems must also provide a MCH-03-C form.*
5. *If one or more space has demand controlled ventilation identify where it is specified including the sensor specifications and the sequence of operation.*
6. *If one or more space has occupant sensor ventilation control identify where it is specified including the sensor specifications and the sequence of operation*
7. *If the system is DDC identify the sequences for the system start/stop, optimal start, setback (if required) and setup (if required). For all systems identify the specification for the thermostats and time clocks (if applicable).*
8. *Identify where the heating, cooling and deadband airflows are scheduled for this system. Include a reference to the specification of the zone controls. Provide a MCH-03-C form.*
9. *Enter N/A if there is no electric heating. If the system has electric heating indicate which exception to 140.4(g) applies.*
10. *If duct leakage sealing and testing is required, a MCH-04-A form must be submitted.*

CA Building Energy Efficiency Standards - 2013 Nonresidential Compliance — May 2015

STATE OF CALIFORNIA
HVAC SYSTEM REQUIREMENTS

CEC-MCH-02-E (Revised 05/15) — CALIFORNIA ENERGY COMMISSION

CERTIFICATE OF COMPLIANCE	NRCC-MCH-02-E
HVAC Dry System Requirements	(Page 2 of 3)
Project Name: Math & Science Complex - Ventura College Bldg B and C	Date Prepared: 7/7/2016

A. Equipment Tags and System Description[1]		AH-4	AH-5	Existing AH-6
B. MANDATORY MEASURES	*T-24 Sections*	*Reference to the Requirements in the Contract Documents[2]*		
Heating Equipment Efficiency[3]	110.1 or 110.2(a)			
Cooling Equipment Efficiency[3]	110.1 or 110.2(a)			
HVAC or Heat Pump Thermostats	110.2(b), 110.2(c)			
Furnace Standby Loss Control	110.2(d)			
Low leakage AHUs	110.2(f)			
Ventilation[4]	120.1(b)			
Demand Control Ventilation[5]	120.1(c)4			
Occupant Sensor Ventilation Control[6]	120.1(c)5, 120.2(e)3			
Shutoff and Reset Controls[7]	120.2(e)			
Outdoor Air and Exhaust Damper Control	120.2(f)			
Isolation Zones	120.2(g)			
Automatic Demand Shed Controls	120.2(h)			
Economizer FDD	120.2(i)			
Duct Insulation	120.4			
C. PRESCRIPTIVE MEASURES				
Equipment is sized in conformance with 140.4 (a & b)	140.4(a & b)	Y Y/N	Y Y/N	Y Y/N
Supply Fan Pressure Control	140.4(c)			
Simultaneous Heat/Cool[8]	140.4(d)			
Economizer	140.4(e)			
Heat and Cool Air Supply Reset	140.4(f)			
Electric Resistance Heating[9]	140.4(g)			
Duct Leakage Sealing and Testing.[10]	140.4(l)			

Notes:
1. *Provide equipment tags (e.g. AHU 1 to 10) and system description (e.g. Single Duct VAV reheat) as appropriate. Multiple units with common requirements can be grouped together.*
2. *Provide references to plans (i.e. Drawing Sheet Numbers) and/or specifications (including Section name/number and relevant paragraphs) where each requirement is specified. Enter "N/A" if the requirement is not applicable to this system.*
3. *The referenced plans and specifications must include all of the following information: equipment tag, equipment nominal capacity, Title 24 minimum efficiency requirements, and actual rated equipment efficiencies. Where multiple efficiency requirements are applicable (e.g. full- and part-load) include all. Where appliance standards apply (110.1), identify where equipment is required to be listed per Title 20 1601 et seq.*
4. *Identify where the ventilation requirements are documented for each central HVAC system. Include references to both central unit schedules and sequences of operation. If one or more space is naturally ventilated identify where this is documented in the plans and specifications. Multiple zone central air systems must also provide a MCH-03-C form.*
5. *If one or more space has demand controlled ventilation identify where it is specified including the sensor specifications and the sequence of operation.*
6. *If one or more space has occupant sensor ventilation control identify where it is specified including the sensor specifications and the sequence of operation*
7. *If the system is DDC identify the sequences for the system start/stop, optimal start, setback (if required) and setup (if required). For all systems identify the specification for the thermostats and time clocks (if applicable).*
8. *Identify where the heating, cooling and deadband airflows are scheduled for this system. Include a reference to the specification of the zone controls. Provide a MCH-03-C form.*
9. *Enter N/A if there is no electric heating. If the system has electric heating indicate which exception to 140.4(g) applies.*
10. *If duct leakage sealing and testing is required, a MCH-04-A form must be submitted.*

CA Building Energy Efficiency Standards - 2013 Nonresidential Compliance — May 2015

STATE OF CALIFORNIA
HVAC SYSTEM REQUIREMENTS

CEC-MCH-02-E (Revised 05/15) — CALIFORNIA ENERGY COMMISSION

CERTIFICATE OF COMPLIANCE	NRCC-MCH-02-E
HVAC Dry System Requirements	(Page 1 of 3)
Project Name: Math & Science Complex - Ventura College Bldg B and C	Date Prepared: 7/7/2016

A. Equipment Tags and System Description[1]		AH-7	FC-1	FC-2
B. MANDATORY MEASURES	*T-24 Sections*	*Reference to the Requirements in the Contract Documents[2]*		
Heating Equipment Efficiency[3]	110.1 or 110.2(a)			
Cooling Equipment Efficiency[3]	110.1 or 110.2(a)			
HVAC or Heat Pump Thermostats	110.2(b), 110.2(c)			
Furnace Standby Loss Control	110.2(d)			
Low leakage AHUs	110.2(f)			
Ventilation[4]	120.1(b)			
Demand Control Ventilation[5]	120.1(c)4			
Occupant Sensor Ventilation Control[6]	120.1(c)5, 120.2(e)3			
Shutoff and Reset Controls[7]	120.2(e)			
Outdoor Air and Exhaust Damper Control	120.2(f)			
Isolation Zones	120.2(g)			
Automatic Demand Shed Controls	120.2(h)			
Economizer FDD	120.2(i)			
Duct Insulation	120.4			
C. PRESCRIPTIVE MEASURES				
Equipment is sized in conformance with 140.4 (a & b)	140.4(a & b)	Y Y/N	Y Y/N	Y Y/N
Supply Fan Pressure Control	140.4(c)			
Simultaneous Heat/Cool[8]	140.4(d)			
Economizer	140.4(e)			
Heat and Cool Air Supply Reset	140.4(f)			
Electric Resistance Heating[9]	140.4(g)			
Duct Leakage Sealing and Testing.[10]	140.4(l)			

Notes:
1. *Provide equipment tags (e.g. AHU 1 to 10) and system description (e.g. Single Duct VAV reheat) as appropriate. Multiple units with common requirements can be grouped together.*
2. *Provide references to plans (i.e. Drawing Sheet Numbers) and/or specifications (including Section name/number and relevant paragraphs) where each requirement is specified. Enter "N/A" if the requirement is not applicable to this system.*
3. *The referenced plans and specifications must include all of the following information: equipment tag, equipment nominal capacity, Title 24 minimum efficiency requirements, and actual rated equipment efficiencies. Where multiple efficiency requirements are applicable (e.g. full- and part-load) include all. Where appliance standards apply (110.1), identify where equipment is required to be listed per Title 20 1601 et seq.*
4. *Identify where the ventilation requirements are documented for each central HVAC system. Include references to both central unit schedules and sequences of operation. If one or more space is naturally ventilated identify where this is documented in the plans and specifications. Multiple zone central air systems must also provide a MCH-03-C form.*
5. *If one or more space has demand controlled ventilation identify where it is specified including the sensor specifications and the sequence of operation.*
6. *If one or more space has occupant sensor ventilation control identify where it is specified including the sensor specifications and the sequence of operation*
7. *If the system is DDC identify the sequences for the system start/stop, optimal start, setback (if required) and setup (if required). For all systems identify the specification for the thermostats and time clocks (if applicable).*
8. *Identify where the heating, cooling and deadband airflows are scheduled for this system. Include a reference to the specification of the zone controls. Provide a MCH-03-C form.*
9. *Enter N/A if there is no electric heating. If the system has electric heating indicate which exception to 140.4(g) applies.*
10. *If duct leakage sealing and testing is required, a MCH-04-A form must be submitted.*

CA Building Energy Efficiency Standards - 2013 Nonresidential Compliance — May 2015

STATE OF CALIFORNIA
HVAC SYSTEM REQUIREMENTS

CEC-MCH-02-E (Revised 05/15) — CALIFORNIA ENERGY COMMISSION

CERTIFICATE OF COMPLIANCE	NRCC-MCH-02-E
HVAC Dry System Requirements	(Page 1 of 3)
Project Name: Math & Science Complex - Ventura College Bldg B and C	Date Prepared: 7/7/2016

A. Equipment Tags and System Description[1]		FC-3	FC-4	FC-5
B. MANDATORY MEASURES	*T-24 Sections*	*Reference to the Requirements in the Contract Documents[2]*		
Heating Equipment Efficiency[3]	110.1 or 110.2(a)			
Cooling Equipment Efficiency[3]	110.1 or 110.2(a)			
HVAC or Heat Pump Thermostats	110.2(b), 110.2(c)			
Furnace Standby Loss Control	110.2(d)			
Low leakage AHUs	110.2(f)			
Ventilation[4]	120.1(b)			
Demand Control Ventilation[5]	120.1(c)4			
Occupant Sensor Ventilation Control[6]	120.1(c)5, 120.2(e)3			
Shutoff and Reset Controls[7]	120.2(e)			
Outdoor Air and Exhaust Damper Control	120.2(f)			
Isolation Zones	120.2(g)			
Automatic Demand Shed Controls	120.2(h)			
Economizer FDD	120.2(i)			
Duct Insulation	120.4			
C. PRESCRIPTIVE MEASURES				
Equipment is sized in conformance with 140.4 (a & b)	140.4(a & b)	Y Y/N	Y Y/N	Y Y/N
Supply Fan Pressure Control	140.4(c)			
Simultaneous Heat/Cool[8]	140.4(d)			
Economizer	140.4(e)			
Heat and Cool Air Supply Reset	140.4(f)			
Electric Resistance Heating[9]	140.4(g)			
Duct Leakage Sealing and Testing.[10]	140.4(l)			

Notes:
1. *Provide equipment tags (e.g. AHU 1 to 10) and system description (e.g. Single Duct VAV reheat) as appropriate. Multiple units with common requirements can be grouped together.*
2. *Provide references to plans (i.e. Drawing Sheet Numbers) and/or specifications (including Section name/number and relevant paragraphs) where each requirement is specified. Enter "N/A" if the requirement is not applicable to this system.*
3. *The referenced plans and specifications must include all of the following information: equipment tag, equipment nominal capacity, Title 24 minimum efficiency requirements, and actual rated equipment efficiencies. Where multiple efficiency requirements are applicable (e.g. full- and part-load) include all. Where appliance standards apply (110.1), identify where equipment is required to be listed per Title 20 1601 et seq.*
4. *Identify where the ventilation requirements are documented for each central HVAC system. Include references to both central unit schedules and sequences of operation. If one or more space is naturally ventilated identify where this is documented in the plans and specifications. Multiple zone central air systems must also provide a MCH-03-C form.*
5. *If one or more space has demand controlled ventilation identify where it is specified including the sensor specifications and the sequence of operation.*
6. *If one or more space has occupant sensor ventilation control identify where it is specified including the sensor specifications and the sequence of operation*
7. *If the system is DDC identify the sequences for the system start/stop, optimal start, setback (if required) and setup (if required). For all systems identify the specification for the thermostats and time clocks (if applicable).*
8. *Identify where the heating, cooling and deadband airflows are scheduled for this system. Include a reference to the specification of the zone controls. Provide a MCH-03-C form.*
9. *Enter N/A if there is no electric heating. If the system has electric heating indicate which exception to 140.4(g) applies.*
10. *If duct leakage sealing and testing is required, a MCH-04-A form must be submitted.*

CA Building Energy Efficiency Standards - 2013 Nonresidential Compliance — May 2015

STATE OF CALIFORNIA
HVAC SYSTEM REQUIREMENTS

CEC-MCH-02-E (Revised 05/15) — CALIFORNIA ENERGY COMMISSION

CERTIFICATE OF COMPLIANCE	NRCC-MCH-02-E
HVAC Dry System Requirements	(Page 1 of 3)
Project Name: Math & Science Complex - Ventura College Bldg B and C	Date Prepared: 7/7/2016

A. Equipment Tags and System Description[1]		Existing FC-6	Existing FC-8	Existing FC-9
B. MANDATORY MEASURES	*T-24 Sections*	*Reference to the Requirements in the Contract Documents[2]*		
Heating Equipment Efficiency[3]	110.1 or 110.2(a)			
Cooling Equipment Efficiency[3]	110.1 or 110.2(a)			
HVAC or Heat Pump Thermostats	110.2(b), 110.2(c)			
Furnace Standby Loss Control	110.2(d)			
Low leakage AHUs	110.2(f)			
Ventilation[4]	120.1(b)			
Demand Control Ventilation[5]	120.1(c)4			
Occupant Sensor Ventilation Control[6]	120.1(c)5, 120.2(e)3			
Shutoff and Reset Controls[7]	120.2(e)			
Outdoor Air and Exhaust Damper Control	120.2(f)			
Isolation Zones	120.2(g)			
Automatic Demand Shed Controls	120.2(h)			
Economizer FDD	120.2(i)			
Duct Insulation	120.4			
C. PRESCRIPTIVE MEASURES				
Equipment is sized in conformance with 140.4 (a & b)	140.4(a & b)	Y Y/N	Y Y/N	Y Y/N
Supply Fan Pressure Control	140.4(c)			
Simultaneous Heat/Cool[8]	140.4(d)			
Economizer	140.4(e)			
Heat and Cool Air Supply Reset	140.4(f)			
Electric Resistance Heating[9]	140.4(g)			
Duct Leakage Sealing and Testing.[10]	140.4(l)			

Notes:
1. *Provide equipment tags (e.g. AHU 1 to 10) and system description (e.g. Single Duct VAV reheat) as appropriate. Multiple units with common requirements can be grouped together.*
2. *Provide references to plans (i.e. Drawing Sheet Numbers) and/or specifications (including Section name/number and relevant paragraphs) where each requirement is specified. Enter "N/A" if the requirement is not applicable to this system.*
3. *The referenced plans and specifications must include all of the following information: equipment tag, equipment nominal capacity, Title 24 minimum efficiency requirements, and actual rated equipment efficiencies. Where multiple efficiency requirements are applicable (e.g. full- and part-load) include all. Where appliance standards apply (110.1), identify where equipment is required to be listed per Title 20 1601 et seq.*
4. *Identify where the ventilation requirements are documented for each central HVAC system. Include references to both central unit schedules and sequences of operation. If one or more space is naturally ventilated identify where this is documented in the plans and specifications. Multiple zone central air systems must also provide a MCH-03-C form.*
5. *If one or more space has demand controlled ventilation identify where it is specified including the sensor specifications and the sequence of operation.*
6. *If one or more space has occupant sensor ventilation control identify where it is specified including the sensor specifications and the sequence of operation*
7. *If the system is DDC identify the sequences for the system start/stop, optimal start, setback (if required) and setup (if required). For all systems identify the specification for the thermostats and time clocks (if applicable).*
8. *Identify where the heating, cooling and deadband airflows are scheduled for this system. Include a reference to the specification of the zone controls. Provide a MCH-03-C form.*
9. *Enter N/A if there is no electric heating. If the system has electric heating indicate which exception to 140.4(g) applies.*
10. *If duct leakage sealing and testing is required, a MCH-04-A form must be submitted.*

CA Building Energy Efficiency Standards - 2013 Nonresidential Compliance — May 2015

STATE OF CALIFORNIA
HVAC SYSTEM REQUIREMENTS

CEC-MCH-02-E (Revised 05/15) — CALIFORNIA ENERGY COMMISSION

CERTIFICATE OF COMPLIANCE	NRCC-MCH-02-E
HVAC Dry System Requirements	(Page 1 of 3)
Project Name: Math & Science Complex - Ventura College Bldg B and C	Date Prepared: 7/7/2016

A. Equipment Tags and System Description[1]		Existing FC-11	Existing FC-12	Existing FC-13
B. MANDATORY MEASURES	*T-24 Sections*	*Reference to the Requirements in the Contract Documents[2]*		
Heating Equipment Efficiency[3]	110.1 or 110.2(a)			
Cooling Equipment Efficiency[3]	110.1 or 110.2(a)			
HVAC or Heat Pump Thermostats	110.2(b), 110.2(c)			
Furnace Standby Loss Control	110.2(d)			
Low leakage AHUs	110.2(f)			
Ventilation[4]	120.1(b)			

STATE OF CALIFORNIA
HVAC SYSTEM REQUIREMENTS
CEC-NRCC-MCH-02-E (Revised 09/15)
CALIFORNIA ENERGY COMMISSION

CERTIFICATE OF COMPLIANCE	NRCC-MCH-02-E
HVAC Dry System Requirements	(Page 1 of 3)
Project Name: Math & Science Complex - Ventura College Bldg B and C	Date Prepared: 7/7/2016

A. Equipment Tags and System Description[1]		Existing FC-14	Existing FC-15	RTU-1B
B. MANDATORY MEASURES	*T-24 Sections*	*Reference to the Requirements in the Contract Documents[2]*		
Heating Equipment Efficiency[3]	110.1 or 110.2(a)			
Cooling Equipment Efficiency[3]	110.1 or 110.2(a)			
HVAC or Heat Pump Thermostats	110.2(b), 110.2(c)			
Furnace Standby Loss Control	110.2(d)			
Low leakage AHUs	110.2(f)			
Ventilation[4]	120.1(b)			
Demand Control Ventilation[4]	120.1(c)4			
Occupant Sensor Ventilation Control[5]	120.1(c)5, 120.2(e)3			
Shutoff and Reset Controls[5]	120.2(e)			
Outdoor Air and Exhaust Damper Control	120.2(f)			
Isolation Zones	120.2(g)			
Automatic Demand Shed Controls	120.2(h)			
Economizer FDD	120.2(i)			
Duct Insulation	120.4			
C. PRESCRIPTIVE MEASURES				
Equipment is sized in conformance with 140.4 (a & b)	140.4(a & b)	Y Y/N	Y Y/N	Y Y/N
Supply Fan Pressure Control	140.4(c)			
Simultaneous Heat/Cool[6]	140.4(d)			
Economizer	140.4(e)			
Heat and Cool Air Supply Reset	140.4(f)			
Electric Resistance Heating[7]	140.4(g)			
Duct Leakage Sealing and Testing[10]	140.4(l)			

Notes:
1. *Provide equipment tags (e.g. AHU 1 to 10) and system description (e.g. Single Duct VAV reheat) as appropriate. Multiple units with common requirements can be grouped together.*
2. *Provide references to plans (i.e. Drawing Sheet Numbers) and/or specifications (including Section name/number and relevant paragraphs) where each requirement is specified. Enter "N/A" if the requirement is not applicable to this system.*
3. *The referenced plans and specifications must include all of the following information: equipment tag, equipment nominal capacity, Title 24 minimum efficiency requirements, and actual rated equipment efficiencies. Where multiple efficiency requirements are applicable (e.g. full- and part-load) include all. Where appliance standards apply (§10.1), identify where equipment is required to be listed per Title 20 1602 et seq.*
4. *Identify where the ventilation requirements are documented for each central HVAC system. Include references to both central unit schedules and sequences of operation. If one or more space is naturally ventilated identify where this is documented in the plans and specifications. Multiple zone central air systems may also provide a MCH-03-E form.*
5. *If one or more space has demand controlled ventilation identify where it is specified including the sensor specifications and the sequence of operation.*
6. *If one or more space has occupant sensor ventilation control identify where it is specified including the sensor specifications and the sequence of operation*
7. *If the system is DOC identify the sequences for the system start/stop, optimal start, setback (if required) and setup (if required). For all systems identify the specification for the thermostats and time clocks (if applicable).*
8. *Identify where the heating, cooling and deadband setpoints are scheduled for this system. Include a reference to the specification of the zone controls. Provide a MCH-03-E form.*
9. *Enter N/A if there is no electric heating. If the system has electric heating indicate which exception to 140.4(g) applies.*
10. *If duct leakage sealing and testing is required, a MCH-04-A form must be submitted.*

STATE OF CALIFORNIA
HVAC SYSTEM REQUIREMENTS
CEC-NRCC-MCH-02-E (Revised 09/15)
CALIFORNIA ENERGY COMMISSION

CERTIFICATE OF COMPLIANCE	NRCC-MCH-02-E
HVAC Dry System Requirements	(Page 2 of 3)
Project Name: Math & Science Complex - Ventura College Bldg B and C	Date Prepared: 7/7/2016

A. Equipment Tags and System Description[1]		RTU-2B		
B. MANDATORY MEASURES	*T-24 Sections*	*Reference to the Requirements in the Contract Documents[2]*		
Heating Equipment Efficiency[3]	110.1 or 110.2(a)			
Cooling Equipment Efficiency[3]	110.1 or 110.2(a)			
HVAC or Heat Pump Thermostats	110.2(b), 110.2(c)			
Furnace Standby Loss Control	110.2(d)			
Low leakage AHUs	110.2(f)			
Ventilation[4]	120.1(b)			
Demand Control Ventilation[4]	120.1(c)4			
Occupant Sensor Ventilation Control[5]	120.1(c)5, 120.2(e)3			
Shutoff and Reset Controls[5]	120.2(e)			
Outdoor Air and Exhaust Damper Control	120.2(f)			
Isolation Zones	120.2(g)			
Automatic Demand Shed Controls	120.2(h)			
Economizer FDD	120.2(i)			
Duct Insulation	120.4			
C. PRESCRIPTIVE MEASURES				
Equipment is sized in conformance with 140.4 (a & b)	140.4(a & b)	Y Y/N	Y Y/N	Y Y/N
Supply Fan Pressure Control	140.4(c)			
Simultaneous Heat/Cool[6]	140.4(d)			
Economizer	140.4(e)			
Heat and Cool Air Supply Reset	140.4(f)			
Electric Resistance Heating[7]	140.4(g)			
Duct Leakage Sealing and Testing[10]	140.4(l)			

Notes:
1. *Provide equipment tags (e.g. AHU 1 to 10) and system description (e.g. Single Duct VAV reheat) as appropriate. Multiple units with common requirements can be grouped together.*
2. *Provide references to plans (i.e. Drawing Sheet Numbers) and/or specifications (including Section name/number and relevant paragraphs) where each requirement is specified. Enter "N/A" if the requirement is not applicable to this system.*
3. *The referenced plans and specifications must include all of the following information: equipment tag, equipment nominal capacity, Title 24 minimum efficiency requirements, and actual rated equipment efficiencies. Where multiple efficiency requirements are applicable (e.g. full- and part-load) include all. Where appliance standards apply (§10.1), identify where equipment is required to be listed per Title 20 1602 et seq.*
4. *Identify where the ventilation requirements are documented for each central HVAC system. Include references to both central unit schedules and sequences of operation. If one or more space is naturally ventilated identify where this is documented in the plans and specifications. Multiple zone central air systems may also provide a MCH-03-E form.*
5. *If one or more space has demand controlled ventilation identify where it is specified including the sensor specifications and the sequence of operation.*
6. *If one or more space has occupant sensor ventilation control identify where it is specified including the sensor specifications and the sequence of operation*
7. *If the system is DOC identify the sequences for the system start/stop, optimal start, setback (if required) and setup (if required). For all systems identify the specification for the thermostats and time clocks (if applicable).*
8. *Identify where the heating, cooling and deadband setpoints are scheduled for this system. Include a reference to the specification of the zone controls. Provide a MCH-03-E form.*
9. *Enter N/A if there is no electric heating. If the system has electric heating indicate which exception to 140.4(g) applies.*
10. *If duct leakage sealing and testing is required, a MCH-04-A form must be submitted.*

STATE OF CALIFORNIA
HVAC WET SYSTEM REQUIREMENTS
CEC-NRCC-MCH-03-E (Revised 09/15)
CALIFORNIA ENERGY COMMISSION

CERTIFICATE OF COMPLIANCE	NRCC-MCH-02-E
HVAC Wet System Requirements	(Page 2 of 3)
Project Name: Math & Science Complex - Ventura College Bldg B and C	Date Prepared: 7/7/2016

A. Equipment Tags and System Description[1]		120 Ton Air Cooled Paterson-Kelley		
B. MANDATORY MEASURES	*T-24 Sections*	*Reference to the Requirements in the Contract Documents[2]*		
Heating Hot Water Equipment Efficiency[3]	110.1			
Cooling Chilled and Condenser Water Equipment Efficiency[3]	110.1, 140.4(i)			
Open and Closed Circuit Cooling Towers conductivity or flow-based controls	110.2(c) 1			
Open and Closed Circuit Cooling Towers Maximum Achievable Cycles of Concentration (SSC[4])	110.2(c) 2			
Open and Closed Circuit Cooling Towers Flow Meter with analog output	110.2(c) 3			
Open and Closed Circuit Cooling Towers Overflow Alarm	110.2(c) 4			
Open and Closed Circuit Cooling Towers Efficient Drift Eliminators	110.2(c) 5			
Pipe Insulation	120.3			
C. PRESCRIPTIVE MEASURES				
Cooling Tower Fan Controls	140.4(h)2, 140.4(h)5	Y Y/N	Y Y/N	Y Y/N
Cooling Tower Flow Controls	140.4(h)3			
Centrifugal Fan Cooling Towers[4]	140.4(h)4			
Air-Cooled Chiller Limitation[5]	140.4(j)			
Variable Flow System Design	140.4(k)			
Chiller and Boiler Isolation	140.4(k)			
CHW and HHW Reset Controls	140.4(k)			
W/LHP Isolation Valves	140.4(k)			
VSD on CHW, CW & W/LHP Pumps >5HP	140.4(k)			
DP Sensor Location	140.4(k)			

Notes:
1. *Provide equipment tags (e.g. CH 1 to 3) or system description (e.g. CHW loop) as appropriate. Multiple units with common requirements can be grouped together.*
2. *Provide references to plans (i.e. Drawing Sheet Numbers) and/or specifications (including Section name/number and relevant paragraphs) where each requirement is specified. Enter "N/A" if the requirement is not applicable to this system.*
3. *The referenced plans and specifications must include all of the following information: equipment tag, equipment nominal capacity, Title 24 minimum efficiency requirements, and actual rated equipment efficiencies. Where multiple efficiency requirements are applicable (e.g. full- and part-load) include all. For chillers operating at non-standard efficiencies provide the Kadj values. For chillers also note whether the efficiencies are Path A or Path B.*
4. *Identify if cooling towers have propeller fans. If towers use centrifugal fans document which exception is used.*
5. *If air-cooled chillers are used, document which exceptions have been used to comply with 140.4(j) and the total installed design capacity of the air-cooled chillers in the chilled water plant.*
6. *Identify the existence of a completed MCH-06-E (when open or closed circuit cooling towers are specified to be installed, otherwise enter "N/A".*

STATE OF CALIFORNIA
HVAC SYSTEM REQUIREMENTS
CEC-NRCC-MCH-03-E (Revised 09/15)
CALIFORNIA ENERGY COMMISSION

CERTIFICATE OF COMPLIANCE	NRCC-MCH-02-E
HVAC Wet System Requirements	(Page 3 of 3)
Project Name: Math & Science Complex - Ventura College Bldg B and C	Date Prepared: 7/7/2016

DOCUMENTATION AUTHOR'S DECLARATION STATEMENT
1. I certify that this Certificate of Compliance documentation is accurate and complete.

Documentation Author Name: Arnel B. de Silva, P.E., LEED AP BD+C	Documentation Author Signature:
Company: J & S Consulting Engineers	Signature Date: 7/7/2016
Address: 3111 Winona Ave., Suite 102	CEA/ HERS Certification Identification (If applicable): M22816
City/State/Zip: Burbank, CA 91504	Phone: (818)841 0303

RESPONSIBLE PERSON'S DECLARATION STATEMENT
I certify the following under penalty of perjury, under the laws of the State of California:
1. The information provided on this Certificate of Compliance is true and correct.
2. I am eligible under Division 3 of the Business and Professions Code to accept responsibility for the building design or system design identified on this Certificate of Compliance (responsible designer).
3. The energy features and performance specifications, materials, components, and manufactured devices for the building design or system design identified on this Certificate of Compliance conform to the requirements of Title 24, Part 1 and Part 6 of the California Code of Regulations.
4. The building design features or system design features identified on this Certificate of Compliance are consistent with the information provided on other applicable compliance documents, worksheets, calculations, plans and specifications submitted to the enforcement agency for approval with this building permit application.
5. I will ensure that a completed signed copy of this Certificate of Compliance shall be made available with the building permit(s) issued for the building, and made available to the enforcement agency for all applicable inspections. I understand that a completed signed copy of this Certificate of Compliance is required to be included with the documentation the builder provides to the building owner at occupancy.

Responsible Designer Name: Arnel B. de Silva, P.E.	Responsible Designer Signature:
Company: J & S Consulting Engineers, Inc.	Date Signed: 5/12/17
Address: 3111 Winona Avenue, Suite 102	License:
City/State/Zip: Burbank, CA 91504	Phone: (818) 841-0303

STATE OF CALIFORNIA
MECHANICAL VENTILATION AND REHEAT
CEC-NRCC-MCH-03-E (Revised 09/15)
CALIFORNIA ENERGY COMMISSION

CERTIFICATE OF COMPLIANCE	NRCC-MCH-03-E
Mechanical Ventilation & Reheat	(Page 1 of 2)
Project Name: Math & Science Complex - Ventura College Bldg B and C	Date Prepared: 7/7/2016

ACTIVE DEMAND CONTROLLED VENTILATION SYSTEM (DCV)						AREA BASIS			OCCUPANCY BASIS			EXHAUST		VAV Reheat or Fixed Primary Air (CFM)		VAV Deadband Primary Air CFM		
SYSTEM TYPE: CODE (SEE TABLE 120.1-A)	DEMAND CONTROLLED VENTILATION (DCV)	MIN. DESIGN OUTDOOR AIR RATE (CFM)	MIN. DESIGN OUTDOOR AIR RATE (CFM/SF)	MIN. DESIGN OUTDOOR AIR RATE (CFM/PERSON)	MIN. DESIGN OUTDOOR AIR RATE (CFM)	TOTAL SUPPLY AIR (CFM)	MIN. OUTDOOR AIR (CFM)	MIN. OUTDOOR AIR (%)	AREA (SF)	OCCUPANCY (PEOPLE)	MIN. OUTDOOR AIR (CFM/PERSON)	MIN. OUTDOOR AIR (CFM)	EXHAUST AIR (CFM)	EXHAUST AIR (CFM/SF)	MIN. OUTDOOR AIR (CFM)	MIN. OUTDOOR AIR (%)	MIN. OUTDOOR AIR (CFM)	MIN. OUTDOOR AIR (%)	COMPLIES
A	B	C	D	E	F	G	H	I	J	K	L	M	N	O	P	Q	R	S	T	U
Biolog						1,168	0.38	438	46.7	15.0	701	701								Y
										Total	701	701								
Micro						1,271	0.38	477	50.8	15.0	762	763								Y
Micro						217	0.38	81	8.7	15.0	130	130								Y
Specr						146	0.38	55	5.8	15.0	88	88								Y
Anima						64	0.38	24	2.6	15.0	38	38								Y
Corrid						335	0.15	50	3.4	15.0	50	50								Y
Biolog						747	0.38	280	29.9	15.0	448	448								Y
Physic						72	0.38	27	2.9	15.0	43	43								Y
Measu						110	0.15	17	1.1	15.0	17	17								Y
Biolog						1,332	0.38	500	53.3	15.0	799	799								Y

Yellow shaded cells require user input. Remaining cells are protected and automatic.
B. The largest amount of primary air supplied by the terminal unit when it's operating in the cooling mode.
C. The smallest amount of primary air supplied by the terminal unit in the deadband mode.
D. The largest amount of primary air supplied by the terminal unit when it's operating in the heating mode.
E. A terminal unit can be controlled with DDC controls, or non-DDC controls. Each control category has different reheat limitations in code.
F. Transfer Air must be provided where Required Ventilation Airflow (Column M) is greater than the Design Primary Deadband Airflow (Column C).
H. Minimum ventilation rate per Section §120.1. Table 120.1-A.
J. Based on number of fixed seats where applicable or the greater of the expected number of occupants and 50% of the CBC occupant load for egress purposes for spaces without fixed seating.
M. Required Ventilation Airflow (Req'd Ventilation Airflow) is the larger of the ventilation rates calculated on an AREA BASIS or OCCUPANCY BASIS (Column I or L)
N. This column identifies whether or not the Design Primary Deadband Airflow complies or not. It compares the value in column M to the value in column C and column F.
O. Design Primary Cooling Airflow * 0.50 for DOC, Design Primary Cooling Airflow * 0.30 for Non-DOC. If the Design Primary Cooling Airflow is less than 300 cfm, then this is not applicable.
P. Maximum of Column M and Column O. If the Design Primary Cooling Airflow is 300 cfm or less, then this is not applicable.
Q. This column identifies whether or not the Design Primary Reheat Airflow at the zone level, complies or not. It compares the value in column P to the value in column D.
R. Design Primary Cooling Airflow * 0.20 for DOC. Not applicable for Non-DOC zones or zones where Design Primary Cooling Airflow is 300 cfm or less.
S. Maximum of Column M and Column R. Not applicable if the Design Primary Cooling Airflow is 300 cfm or less.
T. This column identifies whether or not the Design Primary Deadband Airflow at the zone level, complies or not. It compares the value in column S to the value in column C.

STATE OF CALIFORNIA
MECHANICAL VENTILATION AND REHEAT
CEC-NRCC-MCH-03-E (Revised 09/15)
CALIFORNIA ENERGY COMMISSION

CERTIFICATE OF COMPLIANCE	NRCC-MCH-03-E
Mechanical Ventilation & Reheat	(Page 1 of 2)
Project Name: Math & Science Complex - Ventura College Bldg B and C	Date Prepared: 7/7/2016

ACTIVE DEMAND CONTROLLED VENTILATION SYSTEM (DCV)						AREA BASIS			OCCUPANCY BASIS			EXHAUST		VAV Reheat or Fixed Primary Air (CFM)		VAV Deadband Primary Air CFM		
SYSTEM TYPE: CODE (SEE TABLE 120.1-A)	DEMAND CONTROLLED VENTILATION (DCV)	MIN. DESIGN OUTDOOR AIR RATE (CFM)	MIN. DESIGN OUTDOOR AIR RATE (CFM/SF)	MIN. DESIGN OUTDOOR AIR RATE (CFM/PERSON)	MIN. DESIGN OUTDOOR AIR RATE (CFM)	TOTAL SUPPLY AIR (CFM)	MIN. OUTDOOR AIR (CFM)	MIN. OUTDOOR AIR (%)	AREA (SF)	OCCUPANCY (PEOPLE)	MIN. OUTDOOR AIR (CFM/PERSON)	MIN. OUTDOOR AIR (CFM)	EXHAUST AIR (CFM)	EXHAUST AIR (CFM/SF)	MIN. OUTDOOR AIR (CFM)	MIN. OUTDOOR AIR (%)	MIN. OUTDOOR AIR (CFM)	MIN. OUTDOOR AIR (%)	COMPLIES
A	B	C	D	E	F	G	H	I	J	K	L	M	N	O	P	Q	R	S	T	U
Specr						128	0.15	19	1.3	60.0	77	77								Y
Biolog						1,086	0.38	409	43.5	15.0	653	653								Y
											Total	3,106								
Facult						72	0.15	11	0.7	15.0	11	11								Y
Facult						72	0.15	11	0.7	15.0	11	11								Y
Facult						72	0.15	11	0.7	15.0	11	11								Y
Geolo						731	0.15	110	7.3	15.0	110	110								Y
Geolo						1,160	0.28	435	46.4	15.0	696	696								Y
Physic						1,280	0.28	480	51.2	15.0	768	768								Y
Physic						1,453	0.28	545	58.1	15.0	872	872								Y
Laser						217	0.28	81	8.7	15.0	130	130								Y

Yellow shaded cells require user input. Remaining cells are protected and automatic.
B. The largest amount of primary air supplied by the terminal unit when it's operating in the cooling mode.
C. The smallest amount of primary air supplied by the terminal unit in the deadband mode.
D. The largest amount of primary air supplied by the terminal unit when it's operating in the heating mode.
E. A terminal unit can be controlled with DDC controls, or non-DDC controls. Each control category has different reheat limitations in code.
F. Transfer Air must be provided where Required Ventilation Airflow (Column M) is greater than the Design Primary Deadband Airflow (Column C).
H. Minimum ventilation rate per Section §120.1. Table 120.1-A.
J. Based on number of fixed seats where applicable or the greater of the expected number of occupants and 50% of the CBC occupant load for egress purposes for spaces without fixed seating.
M. Required Ventilation Airflow (Req'd Ventilation Airflow) is the larger of the ventilation rates calculated on an AREA BASIS or OCCUPANCY BASIS (Column I or L)
N. This column identifies whether or not the Design Primary Deadband Airflow complies or not. It compares the value in column M to the value in column C and column F.
O. Design Primary Cooling Airflow * 0.50 for DOC, Design Primary Cooling Airflow * 0.30 for Non-DOC. If the Design Primary Cooling Airflow is less than 300 cfm, then this is not applicable.
P. Maximum of Column M and Column O. If the Design Primary Cooling Airflow is 300 cfm or less, then this is not applicable.
Q. This column identifies whether or not the Design Primary Reheat Airflow at the zone level, complies or not. It compares the value in column P to the value in column D.
R. Design Primary Cooling Airflow * 0.20 for DOC. Not applicable for Non-DOC zones or zones where Design Primary Cooling Airflow is 300 cfm or less.
S. Maximum of Column M and Column R. Not applicable if the Design Primary Cooling Airflow is 300 cfm or less.
T. This column identifies whether or not the Design Primary Deadband Airflow at the zone level, complies or not. It compares the value in column S to the value in column C.

STATE OF CALIFORNIA
MECHANICAL VENTILATION AND REHEAT
CEC-NRCC-MCH-03-E (Revised 09/15)
CALIFORNIA ENERGY COMMISSION

CERTIFICATE OF COMPLIANCE	NRCC-MCH-03-E
Mechanical Ventilation & Reheat	(Page 1 of 2)
Project Name: Math & Science Complex - Ventura College Bldg B and C	Date Prepared: 7/7/2016

ACTIVE DEMAND CONTROLLED VENTILATION SYSTEM (DCV)						AREA BASIS			OCCUPANCY BASIS			EXHAUST		VAV Reheat or Fixed Primary Air (CFM)		VAV Deadband Primary Air CFM		
SYSTEM TYPE: CODE (SEE TABLE 120.1-A)	DEMAND CONTROLLED VENTILATION (DCV)	MIN. DESIGN OUTDOOR AIR RATE (CFM)	MIN. DESIGN OUTDOOR AIR RATE (CFM/SF)	MIN. DESIGN OUTDOOR AIR RATE (CFM/PERSON)	MIN. DESIGN OUTDOOR AIR RATE (CFM)	TOTAL SUPPLY AIR (CFM)	MIN. OUTDOOR AIR (CFM)	MIN. OUTDOOR AIR (%)	AREA (SF)	OCCUPANCY (PEOPLE)	MIN. OUTDOOR AIR (CFM/PERSON)	MIN. OUTDOOR AIR (CFM)	EXHAUST AIR (CFM)	EXHAUST AIR (CFM/SF)	MIN. OUTDOOR AIR (CFM)	MIN. OUTDOOR AIR (%)	MIN. OUTDOOR AIR (CFM)	MIN. OUTDOOR AIR (%)	COMPLIES
A	B	C	D	E	F	G	H	I	J	K	L	M	N	O	P	Q	R	S	T	U
Physic						1,320	0.38	495	52.8	15.0	792	792	Y							
Geolo						1,170	0.38	439	46.8	15.0	702	702	Y							
											Total	4,102								
Chem						1,584	0.38	594	63.4	15.0	950	950	Y							
Chem						1,584	0.38	594	63.4	15.0	950	950	Y							
Chem						1,776	0.38	666	71.0	15.0	1,066	1,066	Y							
Chem						1,584	0.38	594	63.4	15.0	950	950	Y							
Chem						1,209	0.38	453	48.4	15.0	725	725	Y							
											Total	4,642								
Physic						1,045	0.28	392	41.8	15.0	627	627	Y							
											Total	627								

Yellow shaded cells require user input. Remaining cells are protected and automatic.
B. The largest amount of primary air supplied by the terminal unit when it's operating in the cooling mode.
C. The smallest amount of primary air supplied by the terminal unit in the deadband mode.
D. The largest amount of primary air supplied by the terminal unit when it's operating in the heating mode.
E. A terminal unit can be controlled with DDC controls, or non-DDC controls. Each control category has different reheat limitations in code.
F. Transfer Air must be provided where Required Ventilation Airflow (Column M) is greater than the Design Primary Deadband Airflow (Column C).
H. Minimum ventilation rate per Section §120.1. Table 120.1-A.
J. Based on number of fixed seats where applicable or the greater of the expected number of occupants and 50% of the CBC occupant load for egress purposes for spaces without fixed seating.
M. Required Ventilation Airflow (Req'd Ventilation Airflow) is the larger of the ventilation rates calculated on an AREA BASIS or OCCUPANCY BASIS (Column I or L)
N. This column identifies whether or not the Design Primary Deadband Airflow complies or not. It compares the value in column M to the value in column C and column F.
O. Design Primary Cooling Airflow * 0.50 for DOC, Design Primary Cooling Airflow * 0.30 for Non-DOC. If the Design Primary Cooling Airflow is less than 300 cfm, then this is not applicable.
P. Maximum of Column M and Column O. If the Design Primary Cooling Airflow is 300 cfm or less, then this is not applicable.
Q. This column identifies whether or not the Design Primary Reheat Airflow at the zone level, complies or not. It compares the value in column P to the value in column D.
R. Design Primary Cooling Airflow * 0.20 for DOC. Not applicable for Non-DOC zones or zones where Design Primary Cooling Airflow is 300 cfm or less.
S. Maximum of Column M and Column R. Not applicable if the Design Primary Cooling Airflow is 300 cfm or less.
T. This column identifies whether or not the Design Primary Deadband Airflow at the zone level, complies or not. It compares the value in column S to the value in column C.

STATE OF CALIFORNIA
MECHANICAL VENTILATION AND REHEAT
CEC-NRCC-MCH-03-E (Revised 09/15)
CALIFORNIA ENERGY COMMISSION

CERTIFICATE OF COMPLIANCE	NRCC-MCH-03-E
Mechanical Ventilation & Reheat	(Page 1 of 2)
Project Name: Math & Science Complex - Ventura College Bldg B and C	Date Prepared: 7/7/2016

ACTIVE DEMAND CONTROLLED VENTILATION SYSTEM (DCV)						AREA BASIS			OCCUPANCY BASIS			EXHAUST		VAV Reheat or Fixed Primary Air (CFM)		VAV Deadband Primary Air CFM		
SYSTEM TYPE: CODE (SEE TABLE 120.1-A)	DEMAND CONTROLLED VENTILATION (DCV)	MIN. DESIGN OUTDOOR AIR RATE (CFM)	MIN. DESIGN OUTDOOR AIR RATE (CFM/SF)	MIN. DESIGN OUTDOOR AIR RATE (CFM/PERSON)	MIN. DESIGN OUTDOOR AIR RATE (CFM)	TOTAL SUPPLY AIR (CFM)	MIN. OUTDOOR AIR (CFM)	MIN. OUTDOOR AIR (%)	AREA (SF)	OCCUPANCY (PEOPLE)	MIN. OUTDOOR AIR (CFM/PERSON)	MIN. OUTDOOR AIR (CFM)	EXHAUST AIR (CFM)	EXHAUST AIR (CFM/SF)	MIN. OUTDOOR AIR (CFM)	MIN. OUTDOOR AIR (%)	MIN. OUTDOOR AIR (CFM)	MIN. OUTDOOR AIR (%)	COMPLIES
A	B	C	D	E	F	G	H	I	J	K	L	M	N	O	P	Q	R	S	T	U
Chem						1,167	0.38	438	46.7	15.0	700	700	Y							
										Total	700	700								
Chem						892	0.38	335	35.7	15.0	535	535	Y							
Constr						120	0.38	45	4.8	15.0	72	72	Y							
											Total	607								
Chem						117	0.38	44	4.7	15.0	70	70	Y							
											Total	70								
Chem						130	0.38	49	5.2	15.0	78	78	Y							
											Total	78								
Chem						117	0.38	44	4.7	15.0	70	70	Y							
											Total	70								

Yellow shaded cells require user input. Remaining cells are protected and automatic.
B. The largest amount of primary air supplied by the terminal unit when it's operating in the cooling mode.
C. The smallest amount of primary air supplied by the terminal unit in the deadband mode.
D. The largest amount of primary air supplied by the terminal unit when it's operating in the heating mode.
E. A terminal unit can be controlled with DDC controls, or non-DDC controls. Each control category has different reheat limitations in code.
F. Transfer Air must be provided where Required Ventilation Airflow (Column M) is greater than the Design Primary Deadband Airflow (Column C).
H. Minimum ventilation rate per Section §120.1. Table 120.1-A.
J. Based on number of fixed seats where applicable or the greater of the expected number of occupants and 50% of the CBC occupant load for egress purposes for spaces without fixed seating.
M. Required Ventilation Airflow (Req'd Ventilation Airflow) is the larger of the ventilation rates calculated on an AREA BASIS or OCCUPANCY BASIS (Column I or L)
N. This column identifies whether or not the Design Primary Deadband Airflow complies or not. It compares the value in column M to the value in column C and column F.
O. Design Primary Cooling Airflow * 0.50 for DOC, Design Primary Cooling Airflow * 0.30 for Non-DOC. If the Design Primary Cooling Airflow is less than 300 cfm, then this is not applicable.
P. Maximum of Column M and Column O. If the Design Primary Cooling Airflow is 300 cfm or less, then this is not applicable.
Q. This column identifies whether or not the Design Primary Reheat Airflow at the zone level, complies or not. It compares the value in column P to the value in column D.
R. Design Primary Cooling Airflow * 0.20 for DOC. Not applicable for Non-DOC zones or zones where Design Primary Cooling Airflow is 300 cfm or less.
S. Maximum of Column M and Column R. Not applicable if the Design Primary Cooling Airflow is 300 cfm or less.
T. This column identifies whether or not the Design Primary Deadband Airflow at the zone level, complies or not. It compares the value in column S to the value in column C.

STATE OF CALIFORNIA
MECHANICAL VENTILATION AND REHEAT
CEC-NRCC-MCH-03-E (Revised 09/15)
CALIFORNIA ENERGY COMMISSION

CERTIFICATE OF COMPLIANCE	NRCC-MCH-03-E
Mechanical Ventilation & Reheat	(Page 1 of 2)
Project Name: Math & Science Complex - Ventura College Bldg B and C	Date Prepared: 7/7/2016

ACTIVE DEMAND CONTROLLED VENTILATION SYSTEM (DCV)						AREA BASIS			OCCUPANCY BASIS			EXHAUST		VAV Reheat or Fixed Primary Air (CFM)		VAV Deadband Primary Air CFM		
SYSTEM TYPE: CODE (SEE TABLE 120.1-A)	DEMAND CONTROLLED VENTILATION (DCV)	MIN. DESIGN OUTDOOR AIR RATE (CFM)	MIN. DESIGN OUTDOOR AIR RATE (CFM/SF)	MIN. DESIGN OUTDOOR AIR RATE (CFM/PERSON)	MIN. DESIGN OUTDOOR AIR RATE (CFM)	TOTAL SUPPLY AIR (CFM)	MIN. OUTDOOR AIR (CFM)	MIN. OUTDOOR AIR (%)	AREA (SF)	OCCUPANCY (PEOPLE)	MIN. OUTDOOR AIR (CFM/PERSON)	MIN. OUTDOOR AIR (CFM)	EXHAUST AIR (CFM)	EXHAUST AIR (CFM/SF)	MIN. OUTDOOR AIR (CFM)	MIN. OUTDOOR AIR (%)	MIN. OUTDOOR AIR (CFM)	MIN. OUTDOOR AIR (%)	COMPLIES
A	B	C	D	E	F	G	H	I	J	K	L	M	N	O	P	Q	R	S	T	U
Bank R						72	0.00	0	0.5	60.0	22	29	Y							
											Total	29								
Directi						148	0.15	22	1.5	15.0	22	22	Y							
											Total	22								
Secret						696	0.15	104	7.0	15.0	104	104	Y							
											Total

STATE OF CALIFORNIA
REQUIRED ACCEPTANCE TESTS
CEC-NRCC-MCH-04-E (Revised 10/15) — CALIFORNIA ENERGY COMMISSION

CERTIFICATE OF COMPLIANCE	NRCC-MCH-04-E
Required Acceptance Tests	(Page 1 of 3)
Project Name: Math & Science Complex - Ventura College Bldg B and C	Date Prepared: 7/7/2016

MECHANICAL COMPLIANCE FORMS & WORKSHEETS (Indicate if worksheet is included)

For detailed instructions on the use of this and all Energy Efficiency Standards compliance forms, refer to the 2013 Nonresidential Manual Note: The Enforcement Agency may require all forms to be incorporated onto the building plans. Forms NRCC-MCH-04E and NRCC-MCH-05-E are alternative forms to NRCC-MCH-01-E, NRCC-MCH-02-E and NRCC-MCH-03-E for projects using only single zone packaged HVAC systems.

YES	NO	Form	Title
✓		NRCC-MCH-04-E (1 of 2)	Certificate of Compliance. Required on plans when used.
✓		NRCC-MCH-04-E (2 of 2)	Mechanical Acceptance Tests. Required on plans when used.
✓		NRCC-MCH-05-E (1 of 2)	HVAC Prescriptive Requirements. It is required on plans when used.
✓		NRCC-MCH-05-E (2 of 2)	Mechanical SWH Equipment Summary is required for all submittals with service water heating, pools or spas. It is required on plans where applicable.

STATE OF CALIFORNIA
REQUIRED ACCEPTANCE TESTS
CEC-NRCC-MCH-04-E (Revised 10/15) — CALIFORNIA ENERGY COMMISSION

CERTIFICATE OF COMPLIANCE	NRCC-MCH-04-E
Required Acceptance Tests	(Page 2 of 3)
Project Name: Math & Science Complex - Ventura College Bldg B and C	Date Prepared: 7/7/2016

Designer:

This form is to be used by the designer and attached to the plans. Listed below are all the acceptance tests for mechanical systems. The designer is required to check the applicable boxes by all acceptance tests that apply and list all equipment that requires an acceptance test. If all equipment of a certain type requires a test, list the equipment description and the number of systems. The NA number designates the Section in the Appendix of the Nonresidential Reference Appendices Manual that describes the test. Since this form will be part of the plans, completion of this section will allow the responsible party to budget for the scope of work appropriately.

Enforcement Agency:

Systems Acceptance. Before occupancy permit is granted for a newly constructed building or space, or a new space conditioning system serving a building or space is operated for normal use, all control devices serving the building or space shall be certified as meeting the Acceptance Requirements for Code Compliance.

Systems Acceptance. Before occupancy permit is granted. All newly installed HVAC equipment must be tested using the Acceptance Requirements.

The NRCC-MCH-04-E form is not considered a completed form and is not to be accepted by the building department unless the correct boxes are checked. The equipment requiring testing, person performing the test (Example: HVAC Installer, TAB contractor, controls contractor, PE in charge of project) and what Acceptance test must be conducted. The following checked-off forms are required for ALL newly installed and replaced equipment. In addition a Certificate of Acceptance forms shall be submitted to the building department that certifies plans, specifications, installation certificates, and operating and maintenance information meet the requirements of Section 10-103(b) and Title 24 Part 6. The building inspector must receive the properly filled out and signed forms before the building can receive final occupancy.

Test Description: Equipment Requiring Testing or Verification	# of units	MCH-02-A Outdoor Air	MCH-03-A Single Zone Unitary	MCH-05-A Air Distribution Ducts	MCH-05-A Economizer Controls	MCH-06-A Demand Control Ventilation (DCV)	MCH-07-A Supply Fan VAV	MCH-12-A Automatic Demand Shed Control	MCH-12-A FDD for Packaged DX Units	MCH-12-A Distributed Energy Storage DX AC Systems	MCH-18-A Energy Management Control System	Test Performed By:
Trane CSA	1	✓	✓		✓	✓						
Seasons-4	1	✓	✓		✓	✓						
Seasons-4	1	✓	✓		✓	✓						
Seasons-4	1	✓	✓		✓	✓						
Tranes&ma	1	✓	✓			✓						
Trane FCC	4	✓	✓			✓						
BCHD0548	1	✓	✓			✓						
Trane Horiz	2	✓	✓			✓						

STATE OF CALIFORNIA
REQUIRED ACCEPTANCE TESTS
CEC-NRCC-MCH-04-E (Revised 10/15) — CALIFORNIA ENERGY COMMISSION

CERTIFICATE OF COMPLIANCE	NRCC-MCH-04-E
Required Acceptance Tests	(Page 3 of 3)
Project Name: Math & Science Complex - Ventura College Bldg B and C	Date Prepared: 7/7/2016

DOCUMENTATION AUTHOR'S DECLARATION STATEMENT

1. I certify that this Certificate of Compliance documentation is accurate and complete.

Documentation Author Name:	Amel B. de Silva, P.E., LEED AP BD+C	Documentation Author Signature:	
Company:	J & S Consulting Engineers	Signature Date:	7/7/2016
Address:	3111 Winona Ave., Suite 102	CEA/HERS Certification Identification (If applicable):	M22816
City/State/Zip:	Burbank, CA 91504	Phone:	(818)841 0303

RESPONSIBLE PERSON'S DECLARATION STATEMENT

I certify the following under penalty of perjury, under the laws of the State of California:

1. The information provided on this Certificate of Compliance is true and correct.
2. I am eligible under Division 3 of the Business and Professions Code to accept responsibility for the building design or system design identified on this Certificate of Compliance (responsible designer).
3. The energy features and performance specifications, materials, components, and manufactured devices for the building design or system design identified on this Certificate of Compliance conforms to the requirements of Title 24, Part 1 and Part 6 of the California Code of Regulations.
4. The building design features or system design features identified on this Certificate of Compliance are consistent with the information provided on other applicable compliance documents, worksheets, calculations, plans and specifications submitted to the enforcement agency for approval with this building permit application.
5. I will ensure that a completed signed copy of this Certificate of Compliance shall be made available with the building permit(s) issued for the building, and made available to the enforcement agency for all applicable inspections. I understand that a completed signed copy of this Certificate of Compliance is required to be included with the documentation the builder provides to the building owner at occupancy.

Responsible Designer Name:	Amel B. de Silva, P.E.	Responsible Designer Signature:	
Company:	J & S Consulting Engineers, Inc.	Date Signed:	7/7/17
Address:	3111 Winona Avenue, Suite 102	License:	
City/State/Zip:	Burbank, CA 91504	Phone:	(818) 841-0303

STATE OF CALIFORNIA
REQUIREMENTS FOR PACKAGED SINGLE ZONE UNITS
CEC-NRCC-MCH-05-E (Revised 10/15) — CALIFORNIA ENERGY COMMISSION

CERTIFICATE OF COMPLIANCE	NRCC-MCH-05-E
Requirements for Packaged Single-Zone Units	(Page 1 of 2)
Project Name: Math & Science Complex - Ventura College Bldg B and C	Date Prepared: 7/7/2016

Equipment Tag[1]		AH-1		AH-2		AH-3	
MANDATORY MEASURES	*T-24 Sections*	*Requirement*[2]	*As Scheduled*[3]	*Requirement*[2]	*As Scheduled*[3]	*Requirement*[2]	*As Scheduled*[3]
Heating Equipment Efficiency[4]	110.1 or 110.2(a)	n/a	n/a	n/a	n/a	n/a	n/a
Cooling Equipment Efficiency[4]	110.1 or 110.2(a)	11.0 EER	11.0 EER	9.8 EER	11.0 EER	9.8 EER	11.0 EER
Thermostats[5]	110.2(b), 110.2(c)	Setback	Setback	Setback	Setback	Setback	Setback
Furnace Standby Loss Control[6]	110.2(d)	n/a	n/a	n/a	n/a	n/a	n/a
Low Leakage AHU	110.2(f)	NR	none	NR	none	NR	none
Ventilation[7]	120.1(b)	970	970	3,106	3,106	4,102	4,102
Demand Control Ventilation[8]	120.1(c)4	NR	Yes	NR	Yes	NR	Yes
Occupant Sensor Ventilation Control[9]	120.1(c)5, 120.2(e)3						
Shutoff and Reset Controls[9]	120.2(e)	Req	Programmable	Req	Programmable	Req	Programmable S
Outdoor Air and Exhaust Damper Control	120.2(f)	Req	Auto	Req	Auto	Req	Auto
Automatic Demand Shed Controls	120.2(h)	NR	none	NR	none	NR	none
Economizer FDD	120.2(i)	NR		NR		NR	
Duct Insulation	120.4	n/a	none	n/a	none	n/a	none
PRESCRIPTIVE MEASURES							
Equipment is sized in conformance with 140.4 (a & b)	140.4(a & b)	5,151 Btu/hr 39,795 Btu/hr	100,500 Btu/hr 61,646 Btu/hr	268,074 Btu/hr 208,349 Btu/hr	274,988 Btu/hr 216,946 Btu/hr	628,885 Btu/hr 394,068 Btu/hr	349,079 Btu/hr 196,098 Btu/hr
Economizer	140.4(e)	Req	Diff. Enth (integ	Req	Diff. Enth (integ	Req	Diff. Enth (integ
Electric Resistance Heating[10]	140.4(g)	No	No	No	No	No	No
Duct Leakage Sealing and Testing[11]	140.4(l)	NR	No	NR	No	NR	No

Notes:

1. *Provide equipment tags (e.g. AC1 or AC1 to 10). Multiple units of the same make and model with the same application and accessories can be grouped together.*
2. *Enter the following information as appropriate: Unit Manufacturer; Unit Model Number (including all accessories); Description of the unit (e.g. gas-pack or heat pump; rated heating capacity (enter "N/A" if no heating); and, rated cooling capacity (enter "N/A" if no cooling). For unit capacities include the units (e.g. kBtuh or tons).*
3. *For each requirement, enter the minimum requirement from the Standard in the left column (under "Standard Requirement"). In the right column (under "As Scheduled") enter the value for the units as specified.*
4. *Where there is more than one requirement (e.g. full and part load efficiency) enter both with the appropriate labels (e.g. COP and IEER).*
5. *In the left column identify the thermostatic requirements from the standard (e.g. programmable setback thermostat or heatpump with electric heat). . In the right column indicate the capabilities of the thermostat as scheduled.*
6. *If the unit has a furnace which is rated at >=225,000 Btuh of capacity, indicate the rated steadily loss and ignition source (e.g. IID). If there is no furnace or the unit is rated for <225,000 Btuh indicate "N/A".*
7. *In the left column, enter both the required ventilation value from Table 120.1A and for the number of occupants times 15 cfm/person. In the right column enter the actual minimum ventilation as scheduled. If the space is naturally ventilated enter "N/A" in the left column and "the space is naturally ventilated" in the right column.*
8. *If the space is required to have either DCV or Occupant Sensor Ventilation Control indicate "required" in the left column (otherwise indicate "N/A" in the left column). If either DCV or Occupant Sensor Ventilation Control is provided indicate "provided" in the right column (otherwise indicate "N/A" in the right column)*
9. *In the left column indicate the required time controls from the standard. In the right column identify the device that provides this functionality (e.g. EMCS or programmable timeclock).*
10. *Enter N/A if there is no electric heating. If the system has electric heating indicate which exception to 140.4(g) applies.*

STATE OF CALIFORNIA
REQUIREMENTS FOR PACKAGED SINGLE ZONE UNITS
CEC-NRCC-MCH-05-E (Revised 10/15) — CALIFORNIA ENERGY COMMISSION

CERTIFICATE OF COMPLIANCE	NRCC-MCH-05-E
Requirements for Packaged Single-Zone Units	(Page 2 of 2)
Project Name: Math & Science Complex - Ventura College Bldg B and C	Date Prepared: 7/7/2016

Equipment Tag[1]		AH-4		AH-5		Existing AH-6	
MANDATORY MEASURES	*T-24 Sections*	*Requirement*[2]	*As Scheduled*[3]	*Requirement*[2]	*As Scheduled*[3]	*Requirement*[2]	*As Scheduled*[3]
Heating Equipment Efficiency[4]	110.1 or 110.2(a)	n/a	n/a	n/a	n/a	n/a	n/a
Cooling Equipment Efficiency[4]	110.1 or 110.2(a)	9.8 EER	11.0 EER	11 SEER	13.0 SEER / 11	11.0 EER	11.0 EER
Thermostats[5]	110.2(b), 110.2(c)	Setback	Setback	Setback	Setback	Setback	Setback
Furnace Standby Loss Control[6]	110.2(d)	n/a		n/a		n/a	
Low Leakage AHU	110.2(f)	NR	none	NR	none	NR	none
Ventilation[7]	120.1(b)	4,642	4,642	627	1,600	700	700
Demand Control Ventilation[8]	120.1(c)4	NR	Yes	NR	Yes	NR	Yes
Occupant Sensor Ventilation Control[9]	120.1(c)5, 120.2(e)3						
Shutoff and Reset Controls[9]	120.2(e)	Req	Programmable	Req	Programmable	Req	Programmable S
Outdoor Air and Exhaust Damper Control	120.2(f)	Req	Auto	Req	Auto	Req	Auto
Automatic Demand Shed Controls	120.2(h)	NR	none	NR	none	NR	none
Economizer FDD	120.2(i)	Req		NR		Req	
Duct Insulation	120.4	n/a	none	n/a	none	n/a	none
PRESCRIPTIVE MEASURES							
Equipment is sized in conformance with 140.4 (a & b)	140.4(a & b)	410,066 Btu/hr 299,951 Btu/hr	350,500 Btu/hr 264,276 Btu/hr	108,051 Btu/hr 60,822 Btu/hr	62,300 Btu/hr 46,500 Btu/hr	56,430 Btu/hr 37,332 Btu/hr	106,500 Btu/hr 58,342 Btu/hr
Economizer	140.4(e)	Req	Diff. Enth (integ	Req	100% Outside Air	Req	Diff. Enth (integ
Electric Resistance Heating[10]	140.4(g)	No	No	No	No	No	No
Duct Leakage Sealing and Testing[11]	140.4(l)	NR	No	NR	No	NR	No

Notes:

1. *Provide equipment tags (e.g. AC1 or AC1 to 10). Multiple units of the same make and model with the same application and accessories can be grouped together.*
2. *Enter the following information as appropriate: Unit Manufacturer; Unit Model Number (including all accessories); Description of the unit (e.g. gas-pack or heat pump; rated heating capacity (enter "N/A" if no heating); and, rated cooling capacity (enter "N/A" if no cooling). For unit capacities include the units (e.g. kBtuh or tons).*
3. *For each requirement, enter the minimum requirement from the Standard in the left column (under "Standard Requirement"). In the right column (under "As Scheduled") enter the value for the units as specified.*
4. *Where there is more than one requirement (e.g. full and part load efficiency) enter both with the appropriate labels (e.g. COP and IEER).*
5. *In the left column identify the thermostatic requirements from the standard (e.g. programmable setback thermostat or heatpump with electric heat). . In the right column indicate the capabilities of the thermostat as scheduled.*
6. *If the unit has a furnace which is rated at >=225,000 Btuh of capacity, indicate the rated steadily loss and ignition source (e.g. IID). If there is no furnace or the unit is rated for <225,000 Btuh indicate "N/A".*
7. *In the left column, enter both the required ventilation value from Table 120.1A and for the number of occupants times 15 cfm/person. In the right column enter the actual minimum ventilation as scheduled. If the space is naturally ventilated enter "N/A" in the left column and "the space is naturally ventilated" in the right column.*
8. *If the space is required to have either DCV or Occupant Sensor Ventilation Control indicate "required" in the left column (otherwise indicate "N/A" in the left column). If either DCV or Occupant Sensor Ventilation Control is provided indicate "provided" in the right column (otherwise indicate "N/A" in the right column)*
9. *In the left column indicate the required time controls from the standard. In the right column identify the device that provides this functionality (e.g. EMCS or programmable timeclock).*
10. *Enter N/A if there is no electric heating. If the system has electric heating indicate which exception to 140.4(g) applies.*

STATE OF CALIFORNIA
REQUIREMENTS FOR PACKAGED SINGLE ZONE UNITS
CEC-NRCC-MCH-05-E (Revised 10/15) — CALIFORNIA ENERGY COMMISSION

CERTIFICATE OF COMPLIANCE	NRCC-MCH-05-E
Requirements for Packaged Single-Zone Units	(Page 1 of 2)
Project Name: Math & Science Complex - Ventura College Bldg B and C	Date Prepared: 7/7/2016

Equipment Tag[1]		Existing AH-7		FC-1		FC-2	
MANDATORY MEASURES	*T-24 Sections*	*Requirement*[2]	*As Scheduled*[3]	*Requirement*[2]	*As Scheduled*[3]	*Requirement*[2]	*As Scheduled*[3]
Heating Equipment Efficiency[4]	110.1 or 110.2(a)	n/a	n/a	n/a	n/a	n/a	n/a
Cooling Equipment Efficiency[4]	110.1 or 110.2(a)	11.0 EER	11.0 EER	n/a	n/a	n/a	n/a
Thermostats[5]	110.2(b), 110.2(c)	Setback	Setback	Setback	Setback	Setback	Setback
Furnace Standby Loss Control[6]	110.2(d)	n/a		n/a		n/a	
Low Leakage AHU	110.2(f)	NR	none	NR	none	NR	none
Ventilation[7]	120.1(b)	607	607	70	70	78	78
Demand Control Ventilation[8]	120.1(c)4	NR	Yes	NR	Yes	NR	Yes
Occupant Sensor Ventilation Control[9]	120.1(c)5, 120.2(e)3						
Shutoff and Reset Controls[9]	120.2(e)	Req	Programmable	Req	Programmable	Req	Programmable S
Outdoor Air and Exhaust Damper Control	120.2(f)	Req	Auto	Req	Auto	Req	Auto
Automatic Demand Shed Controls	120.2(h)	NR	none	NR	none	NR	none
Economizer FDD	120.2(i)	Req		NR		NR	
Duct Insulation	120.4	n/a	none	n/a	none	n/a	none
PRESCRIPTIVE MEASURES							
Equipment is sized in conformance with 140.4 (a & b)	140.4(a & b)	49,322 Btu/hr 33,432 Btu/hr	100,500 Btu/hr 59,731 Btu/hr	5,806 Btu/hr 3,739 Btu/hr	5,550 Btu/hr 5,230 Btu/hr	6,443 Btu/hr 4,263 Btu/hr	5,550 Btu/hr 5,230 Btu/hr
Economizer	140.4(e)	Req	Diff. Enth (integ	NR	No Economizer	NR	No Economizer
Electric Resistance Heating[10]	140.4(g)	No	No	No	No	No	No
Duct Leakage Sealing and Testing[11]	140.4(l)	NR	No	NR	No	NR	No

Notes:

1. *Provide equipment tags (e.g. AC1 or AC1 to 10). Multiple units of the same make and model with the same application and accessories can be grouped together.*
2. *Enter the following information as appropriate: Unit Manufacturer; Unit Model Number (including all accessories); Description of the unit (e.g. gas-pack or heat pump; rated heating capacity (enter "N/A" if no heating); and, rated cooling capacity (enter "N/A" if no cooling). For unit capacities include the units (e.g. kBtuh or tons).*
3. *For each requirement, enter the minimum requirement from the Standard in the left column (under "Standard Requirement"). In the right column (under "As Scheduled") enter the value for the units as specified.*
4. *Where there is more than one requirement (e.g. full and part load efficiency) enter both with the appropriate labels (e.g. COP and IEER).*
5. *In the left column identify the thermostatic requirements from the standard (e.g. programmable setback thermostat or heatpump with electric heat). . In the right column indicate the capabilities of the thermostat as scheduled.*
6. *If the unit has a furnace which is rated at >=225,000 Btuh of capacity, indicate the rated steadily loss and ignition source (e.g. IID). If there is no furnace or the unit is rated for <225,000 Btuh indicate "N/A".*
7. *In the left column, enter both the required ventilation value from Table 120.1A and for the number of occupants times 15 cfm/person. In the right column enter the actual minimum ventilation as scheduled. If the space is naturally ventilated enter "N/A" in the left column and "the space is naturally ventilated" in the right column.*
8. *If the space is required to have either DCV or Occupant Sensor Ventilation Control indicate "required" in the left column (otherwise indicate "N/A" in the left column). If either DCV or Occupant Sensor Ventilation Control is provided indicate "provided" in the right column (otherwise indicate "N/A" in the right column)*
9. *In the left column indicate the required time controls from the standard. In the right column identify the device that provides this functionality (e.g. EMCS or programmable timeclock).*
10. *Enter N/A if there is no electric heating. If the system has electric heating indicate which exception to 140.4(g) applies.*

STATE OF CALIFORNIA
REQUIREMENTS FOR PACKAGED SINGLE ZONE UNITS
CEC-NRCC-MCH-05-E (Revised 10/15) — CALIFORNIA ENERGY COMMISSION

CERTIFICATE OF COMPLIANCE	NRCC-MCH-05-E
Requirements for Packaged Single-Zone Units	(Page 1 of 2)
Project Name: Math & Science Complex - Ventura College Bldg B and C	Date Prepared: 7/7/2016

Equipment Tag[1]		FC-3		FC-4		FC-5	
MANDATORY MEASURES	*T-24 Sections*	*Requirement*[2]	*As Scheduled*[3]	*Requirement*[2]	*As Scheduled*[3]	*Requirement*[2]	*As Scheduled*[3]
Heating Equipment Efficiency[4]	110.1 or 110.2(a)	n/a	n/a	n/a	n/a	n/a	n/a
Cooling Equipment Efficiency[4]	110.1 or 110.2(a)	n/a	n/a	n/a	n/a	n/a	n/a
Thermostats[5]	110.2(b), 110.2(c)	Setback	Setback	Setback	Setback	Setback	Setback
Furnace Standby Loss Control[6]	110.2(d)	n/a	n/a	n/a	n/a	n/a	n/a
Low Leakage AHU	110.2(f)	NR	none	NR	none	NR	none
Ventilation[7]	120.1(b)	70	70	70	70	67	67
Demand Control Ventilation[8]	120.1(c)4	NR	Yes	NR	Yes	NR	Yes
Occupant Sensor Ventilation Control[9]	120.1(c)5, 120.2(e)3						
Shutoff and Reset Controls[9]	120.2(e)	Req	Programmable	Req	Programmable	Req	Programmable S
Outdoor Air and Exhaust Damper Control	120.2(f)	Req	Auto	Req	Auto	Req	Auto
Automatic Demand Shed Controls	120.2(h)	none	NR	none	NR	none	NR
Economizer FDD	120.2(i)	NR		NR		NR	
Duct Insulation	120.4	n/a	none	n/a	none	n/a	none
PRESCRIPTIVE MEASURES							
Equipment is sized in conformance with 140.4 (a & b)	140.4(a & b)	5,878 Btu/hr 4,256 Btu/hr	5,550 Btu/hr 5,230 Btu/hr	5,110 Btu/hr 3,575 Btu/hr	5,550 Btu/hr 5,230 Btu/hr	5,883 Btu/hr 3,906 Btu/hr	5,550 Btu/hr 12,000 Btu/hr
Economizer	140.4(e)	NR	No Economizer	NR	No Economizer	NR	No Economizer
Electric Resistance Heating[10]	140.4(g)	No	No	No	No	No	No
Duct Leakage Sealing and Testing[11]	140.4(l)	NR	No	NR	No	NR	No

Notes:

1. *Provide equipment tags (e.g. AC1 or AC1 to 10). Multiple units of the same make and model with the same application and accessories can be grouped together.*
2. *Enter the following information as appropriate: Unit Manufacturer; Unit Model Number (including all accessories); Description of the unit (e.g. gas-pack or heat pump; rated heating capacity (enter "N/A" if no heating); and, rated cooling capacity (enter "N/A" if no cooling). For unit capacities include the units (e.g. kBtuh or tons).*
3. *For each requirement, enter the minimum requirement from the Standard in the left column (under "Standard Requirement"). In the right column (under "As Scheduled") enter the value for the units as specified.*
4. *Where there is more than one requirement (e.g. full and part load efficiency) enter both with the appropriate labels (e.g. COP and IEER).*
5. *In the left column identify the thermostatic requirements from the standard (e.g. programmable setback thermostat or heatpump with electric heat). . In the right column indicate the capabilities of the thermostat as scheduled.*
6. *If the unit has a furnace which is rated at >=225,000 Btuh of capacity, indicate the rated steadily loss and ignition source (e.g. IID). If there is no furnace or the unit is rated for <225,000 Btuh indicate "N/A".*
7. *In the left column, enter both the required ventilation value from Table 120.1A and for the number of occupants times 15 cfm/person. In the right column enter the actual minimum ventilation as scheduled. If the space is naturally ventilated enter "N/A" in the left column and "the space is naturally ventilated" in the right column.*
8. *If the space is required to have either DCV or Occupant Sensor Ventilation Control indicate "required" in the left column (otherwise indicate "N/A" in the left column). If either DCV or Occupant Sensor Ventilation Control is provided indicate "provided" in the right column (otherwise indicate "N/A" in the right column)*
9. *In the left column indicate the required time controls from the standard. In the right column identify the device that provides this functionality (e.g. EMCS or programmable timeclock).*
10. *Enter N/A if there is no electric heating. If the system has electric heating indicate which exception to 140.4(g) applies.*

STATE OF CALIFORNIA
REQUIREMENTS FOR PACKAGED SINGLE ZONE UNITS
CEC-NRCC-MCH-05-E (Revised 10/15) — CALIFORNIA ENERGY COMMISSION

CERTIFICATE OF COMPLIANCE	NRCC-MCH-05-E
Requirements for Packaged Single-Zone Units	(Page 1 of 2)
Project Name: Math & Science Complex - Ventura College Bldg B and C	Date Prepared: 7/7/2016

Equipment Tag[1]		Existing FC-6		Existing FC-8		Existing FC-9	
MANDATORY MEASURES	*T-24 Sections*	*Requirement*[2]	*As Scheduled*[3]	*Requirement*[2]	*As Scheduled*[3]	*Requirement*[2]	*As Scheduled*[3]
Heating Equipment Efficiency[4]	110.1 or 110.2(a)	n/a	n/a	n/a	n/a	n/a	n/a
Cooling Equipment Efficiency[4]	110.1 or 110.2(a)	13 SEER	13.0 SEER / 1	n/a	n/a	n/a	n/a
Thermostats[5]	110.2(b), 110.2(c)	Setback	Setback	Setback	Setback	Setback	Setback
Furnace Standby Loss Control[6]	110.2(d)	n/a	n/a			n/a	n/a
Low Leakage AHU	110.2(f)	NR	none	NR	none	NR	none
Ventilation[7]	120.1(b)	45	45	175	175	29	29
Demand Control Ventilation[8]	120.1(c)4	NR	Yes	NR	Yes	NR	Yes
Occupant Sensor Ventilation Control[9]	120.1(c)5, 120.2(e)3						
Shutoff and Reset Controls[9]	120.2(e)	Req	Programmable	Req	Programmable	Req	Programmable S
Outdoor Air and Exhaust Damper Control	120.2(f)	Req	Auto	Req	Auto	Req	Auto
Automatic Demand Shed Controls	120.2(h)	NR	none	NR	none	NR	none
Economizer FDD	120.2(i)	NR		NR		NR	
Duct Insulation	120.4	n/a	none	n/a	none	n/a	none
PRESCRIPTIVE MEASURES							
Equipment is sized in conformance with 140.4 (a & b)	140.4(a & b)	3,510 Btu/hr 2,400 Btu/hr	6,080 Btu/hr 5,151 Btu/hr	27,961 Btu/hr 19,767 Btu/hr	121,560 Btu/hr 0 Btu/hr	4,314 Btu/hr 1,828 Btu/hr	72,360 Btu/hr 0 Btu/hr
Economizer	140.4(e)	NR	No Economizer	NR	No Economizer	NR	No Economizer
Electric Resistance Heating[10]	140.4(g)	No	No	No	No	No	No
Duct Leakage Sealing and Testing[11]	140.4(l)	NR	No	NR	No	NR	No

Notes:

1. *Provide equipment tags (e.g. AC1 or AC1 to 10). Multiple units of the same make and model with the same application and accessories can be grouped together.*
2. *Enter the following information as appropriate: Unit Manufacturer; Unit Model Number (including all accessories); Description of the unit (e.g. gas-pack or heat pump; rated heating capacity (enter "N/A" if no heating); and, rated cooling capacity (enter "N/A" if no cooling). For unit capacities include the units (e.g. kBtuh or tons).*
3. *For each requirement, enter the minimum requirement from the Standard in the left column (under "Standard Requirement"). In the right column (under "As Scheduled") enter the value for the units as specified.*
4. *Where there is more than one requirement (e.g. full and part load efficiency) enter both with the appropriate labels (e.g. COP and IEER).*
5. *In the left column identify the thermostatic requirements from the standard (e.g. programmable setback thermostat or heatpump with electric heat). . In the right column indicate the capabilities of the thermostat as scheduled.*
6. *If the unit has a furnace which is rated at >=225,000 Btuh of capacity, indicate the rated steadily loss and ignition source (e.g. IID). If there is no furnace or the unit is rated for <225,000 Btuh indicate "N/A".*
7. *In the left column, enter both the required ventilation value from Table 120.1A and for the number of occupants times 15 cfm/person. In the right column enter the actual minimum ventilation as scheduled. If the space is naturally ventilated enter "N/A" in the left column and "the space is naturally ventilated" in the right column.*
8. *If the space is required to have either DCV or Occupant Sensor Ventilation Control indicate "required" in the left column (otherwise indicate "N/A" in the left column). If either DCV or Occupant Sensor Ventilation Control is provided indicate "provided" in the right column (otherwise indicate "N/A" in the right column)*
9. *In the left column indicate the required time controls from the standard. In the right column identify the device that provides this functionality (e.g. EMCS or programmable timeclock).*
10. *Enter N/A if there is no electric heating. If the system has electric heating indicate which exception to 140.4(g) applies.*

STATE OF CALIFORNIA
REQUIREMENTS FOR PACKAGED SINGLE ZONE UNITS
CEC-NRCC-MCH-05-E (Revised 10/15) — CALIFORNIA ENERGY COMMISSION

CERTIFICATE OF COMPLIANCE	NRCC-MCH-05-E
Requirements for Packaged Single-Zone Units	(Page 1 of 2)
Project Name: Math & Science Complex - Ventura College Bldg B and C	Date Prepared: 7/7/2016

Equipment Tag[1]		Existing FC-11		Existing FC-12		Existing FC-13	
MANDATORY MEASURES	*T-24 Sections*	*Requirement*[2]	*As Scheduled*[3]	*Requirement*[2]	*As Scheduled*[3]	*Requirement*[2]	*As Scheduled*[3]
Heating Equipment Efficiency[4]	110.1 or 110.2(a)	n/a	n/a	n/a	n/a	n/a	n/a
Cooling Equipment Efficiency[4]	110.1 or 110.2(a)	13 SEER	13.0 SEER / 11	13 SEER	13.0 SEER / 11	13 SEER	12.0 SEER / 11.0
Thermostats[5]	110.2(b), 110.2(c)	Setback	Setback	Setback	Setback	Setback	Setback
Furnace Standby Loss Control[6]	110.2(d)	n/a		n/a		n/a	
Low Leakage AHU	110.2(f)	NR	none	NR	none	NR	none
Ventilation[7]	120.1(b)	22	22	104	104	94	94
Demand Control Ventilation[8]	120.1(c)4	NR	Yes	NR	Yes	NR	Yes
Occupant Sensor Ventilation Control[9]	120.1(c)5, 120.2(e)3						
Shutoff and Reset Controls[9]	120.2(e)	Req	Programmable	Req	Programmable	Req	Programmable S
Outdoor Air and Exhaust Damper Control	120.2(f)	Req	Auto	Req	Auto	Req	Auto
Automatic Demand Shed Controls	120.2(h)	NR	none	NR	none	NR	none
Economizer FDD	120.2(i)	NR		NR		NR	
Duct Insulation	120.4	n/a	none	n/a	none	n/a	none
PRESCRIPTIVE MEASURES							
Equipment is sized in conformance with 140.4 (a & b)	140.4(a & b)	6,907 Btu/hr 7,419 Btu/hr	9,600 Btu/hr 8,033 Btu/hr	24,761 Btu/hr 34,200 Btu/hr	23,520 Btu/hr 33,577 Btu/hr	11,741 Btu/hr 11,317 Btu/hr	34,760 Btu/hr 27,088 Btu/hr
Economizer	140.4(e)	NR	No Economizer	NR	No Economizer	NR	No Economizer
Electric Resistance Heating[10]	140.4(g)	No	No	No	No	No	No
Duct Leakage Sealing and Testing[11]	140.4(l)	NR	No	NR	No	NR	No

Notes:

1. *Provide equipment tags (e.g. AC1 or AC1 to 10). Multiple units of the same make and model with the same application and accessories can be grouped together.*
2. *Enter the following information as appropriate: Unit Manufacturer; Unit Model Number (including all accessories); Description of the unit (e.g. gas-pack or heat pump; rated heating capacity (enter "N/A" if no heating); and, rated cooling capacity (enter "N/A" if no cooling). For unit capacities include the units (e.g. kBtuh or tons).*
3. *For each requirement, enter the minimum requirement from the Standard in the left column (under "Standard Requirement"). In the right column (under "As Scheduled") enter the value for the units as specified.*
4. *Where there is more than one requirement (e.g. full and part load efficiency) enter both with the appropriate labels (e.g. COP and IEER).*
5. *In the left column identify the thermostatic requirements from the standard (e.g. programmable setback thermostat or heatpump with electric heat). . In the right column indicate the capabilities of the thermostat as scheduled.*
6. *If the unit has a furnace which is rated at >=225,000 Btuh of capacity, indicate the rated steadily loss and ignition source (e.g. IID). If there is no furnace or the unit is rated for <225,000 Btuh indicate "N/A".*
7. *In the left column, enter both the required ventilation value from Table 120.1A and for the number of occupants times 15 cfm/person. In the right column enter the actual minimum ventilation as scheduled. If the space is naturally ventilated enter "N/A" in the left column and "the space is naturally ventilated" in the right column.*
8. *If the space is required to have either DCV or Occupant Sensor Ventilation Control indicate "required" in the left column (otherwise indicate "N/A" in the left column). If either DCV or Occupant Sensor Ventilation Control is provided indicate "provided" in the right column (otherwise indicate "N/A" in the right column)*
9. *In the left column indicate the required time controls from the standard. In the right column identify the device that provides this functionality

STATE OF CALIFORNIA
FAN POWER CONSUMPTION
CEC-NRCC-MCH-07-E (Revised 05/15) — CALIFORNIA ENERGY COMMISSION

CERTIFICATE OF COMPLIANCE	NRCC-MCH-07-E
Power Consumption of Fans Requirements	(Page 1 of 2)
Project Name: Math & Science Complex - Ventura College Bldg B and C	Date Prepared: 7/7/2016

Constant Volume Fans Systems

NOTE: Provide one copy of this worksheet for each fan system with a total fan system horsepower greater than 25 hp of Constant Volume Fan Systems when using the Prescriptive Approach. See Power Consumption of fans §140.4(c).

A	B	C	D	E	F
FAN DESCRIPTION	DESIGN BRAKE HP	EFFICIENCY MOTOR	EFFICIENCY DRIVE	NUMBER OF FANS	PEAK WATTS B x E x 746 / (C x D)
AH-1 - Supply Fan	5.000	91.7 %	97.0 %	1.0	4,193
Return Fan	2.000	89.5 %	97.0 %	1.0	1,719

Variable Air Volume Fans Systems

NOTE: Provide one copy of this worksheet for each fan system with a total fan system horsepower greater than 25 hp of Variable Air Volume (VAV) Systems when using the Prescriptive Approach. See Power Consumption of fans §140.4(c).

A	B	C	D	E	F
FAN DESCRIPTION	DESIGN BRAKE HP	EFFICIENCY MOTOR	EFFICIENCY DRIVE	NUMBER OF FANS	PEAK WATTS B x E x 746 / (C x D)

Totals and Adjustments

FILTER PRESSURE ADJUSTMENT Equation 140.4-A in §140.4(c) of the Building Energy Efficiency Standards.	1) TOTAL FAN SYSTEM POWER (WATTS, SUM COLUMN F)	5,912	W
	2) SUPPLY DESIGN AIRFLOW	1,980	CFM
A) If filter pressure drop (SP_a) is greater than 1 inch W. C. or 245 Pascal then enter SP_a on line 4. Enter Total Fan pressure drop across the fan (SP_f) on Line 5.	3) TOTAL FAN SYSTEM POWER INDEX (Row 1 / Row 2)[1]	2.986	W/CFM
	4) SP_a		in W.C or Pa
B) Calculate Fan Adjustment and enter on line 6.	5) SP_f		in W.C or Pa
C) Calculate Adjusted Fan Power Index and enter on Row 7	6) Fan Adjustment = 1-(SP_a – 1)/SP_f		
	7) ADJUSTED FAN POWER INDEX (Line 3 x Line 6)[1]	2.986	W/CFM

1. TOTAL FAN SYSTEM POWER INDEX or ADJUSTED FAN POWER INDEX must not exceed 0.8 w/cfm for Constant Volume systems or 1.25 w/cfm for VAV systems.

STATE OF CALIFORNIA
FAN POWER CONSUMPTION
CEC-NRCC-MCH-07-E (Revised 05/15) — CALIFORNIA ENERGY COMMISSION

CERTIFICATE OF COMPLIANCE	NRCC-MCH-07-E
Power Consumption of Fans Requirements	(Page 1 of 2)
Project Name: Math & Science Complex - Ventura College Bldg B and C	Date Prepared: 7/7/2016

Constant Volume Fans Systems

NOTE: Provide one copy of this worksheet for each fan system with a total fan system horsepower greater than 25 hp of Constant Volume Fan Systems when using the Prescriptive Approach. See Power Consumption of fans §140.4(c).

A	B	C	D	E	F
FAN DESCRIPTION	DESIGN BRAKE HP	EFFICIENCY MOTOR	EFFICIENCY DRIVE	NUMBER OF FANS	PEAK WATTS B x E x 746 / (C x D)
AH-2 - Supply Fan	20.000	93.6 %	97.0 %	1.0	16,433
Return Fan	10.000	92.4 %	97.0 %	1.0	8,323

Variable Air Volume Fans Systems

NOTE: Provide one copy of this worksheet for each fan system with a total fan system horsepower greater than 25 hp of Variable Air Volume (VAV) Systems when using the Prescriptive Approach. See Power Consumption of fans §140.4(c).

A	B	C	D	E	F
FAN DESCRIPTION	DESIGN BRAKE HP	EFFICIENCY MOTOR	EFFICIENCY DRIVE	NUMBER OF FANS	PEAK WATTS B x E x 746 / (C x D)

Totals and Adjustments

FILTER PRESSURE ADJUSTMENT Equation 140.4-A in §140.4(c) of the Building Energy Efficiency Standards.	1) TOTAL FAN SYSTEM POWER (WATTS, SUM COLUMN F)	24,756	W
	2) SUPPLY DESIGN AIRFLOW	9,235	CFM
A) If filter pressure drop (SP_a) is greater than 1 inch W. C. or 245 Pascal then enter SP_a on line 4. Enter Total Fan pressure drop across the fan (SP_f) on Line 5.	3) TOTAL FAN SYSTEM POWER INDEX (Row 1 / Row 2)[1]	2.681	W/CFM
	4) SP_a		in W.C or Pa
B) Calculate Fan Adjustment and enter on line 6.	5) SP_f		in W.C or Pa
C) Calculate Adjusted Fan Power Index and enter on Row 7	6) Fan Adjustment = 1-(SP_a – 1)/SP_f		
	7) ADJUSTED FAN POWER INDEX (Line 3 x Line 6)[1]	2.681	W/CFM

1. TOTAL FAN SYSTEM POWER INDEX or ADJUSTED FAN POWER INDEX must not exceed 0.8 w/cfm for Constant Volume systems or 1.25 w/cfm for VAV systems.

STATE OF CALIFORNIA
FAN POWER CONSUMPTION
CEC-NRCC-MCH-07-E (Revised 05/15) — CALIFORNIA ENERGY COMMISSION

CERTIFICATE OF COMPLIANCE	NRCC-MCH-07-E
Power Consumption of Fans Requirements	(Page 1 of 2)
Project Name: Math & Science Complex - Ventura College Bldg B and C	Date Prepared: 7/7/2016

Constant Volume Fans Systems

NOTE: Provide one copy of this worksheet for each fan system with a total fan system horsepower greater than 25 hp of Constant Volume Fan Systems when using the Prescriptive Approach. See Power Consumption of fans §140.4(c).

A	B	C	D	E	F
FAN DESCRIPTION	DESIGN BRAKE HP	EFFICIENCY MOTOR	EFFICIENCY DRIVE	NUMBER OF FANS	PEAK WATTS B x E x 746 / (C x D)
AH-3 - Supply Fan	20.000	93.6 %	97.0 %	1.0	16,433
Return Fan	15.000	93.0 %	97.0 %	1.0	12,404

Variable Air Volume Fans Systems

NOTE: Provide one copy of this worksheet for each fan system with a total fan system horsepower greater than 25 hp of Variable Air Volume (VAV) Systems when using the Prescriptive Approach. See Power Consumption of fans §140.4(c).

A	B	C	D	E	F
FAN DESCRIPTION	DESIGN BRAKE HP	EFFICIENCY MOTOR	EFFICIENCY DRIVE	NUMBER OF FANS	PEAK WATTS B x E x 746 / (C x D)

Totals and Adjustments

FILTER PRESSURE ADJUSTMENT Equation 140.4-A in §140.4(c) of the Building Energy Efficiency Standards.	1) TOTAL FAN SYSTEM POWER (WATTS, SUM COLUMN F)	28,838	W
	2) SUPPLY DESIGN AIRFLOW	11,375	CFM
A) If filter pressure drop (SP_a) is greater than 1 inch W. C. or 245 Pascal then enter SP_a on line 4. Enter Total Fan pressure drop across the fan (SP_f) on Line 5.	3) TOTAL FAN SYSTEM POWER INDEX (Row 1 / Row 2)[1]	2.535	W/CFM
	4) SP_a		in W.C or Pa
B) Calculate Fan Adjustment and enter on line 6.	5) SP_f		in W.C or Pa
C) Calculate Adjusted Fan Power Index and enter on Row 7	6) Fan Adjustment = 1-(SP_a – 1)/SP_f		
	7) ADJUSTED FAN POWER INDEX (Line 3 x Line 6)[1]	2.535	W/CFM

1. TOTAL FAN SYSTEM POWER INDEX or ADJUSTED FAN POWER INDEX must not exceed 0.8 w/cfm for Constant Volume systems or 1.25 w/cfm for VAV systems.

STATE OF CALIFORNIA
FAN POWER CONSUMPTION
CEC-NRCC-MCH-07-E (Revised 05/15) — CALIFORNIA ENERGY COMMISSION

CERTIFICATE OF COMPLIANCE	NRCC-MCH-07-E
Power Consumption of Fans Requirements	(Page 1 of 2)
Project Name: Math & Science Complex - Ventura College Bldg B and C	Date Prepared: 7/7/2016

Constant Volume Fans Systems

NOTE: Provide one copy of this worksheet for each fan system with a total fan system horsepower greater than 25 hp of Constant Volume Fan Systems when using the Prescriptive Approach. See Power Consumption of fans §140.4(c).

A	B	C	D	E	F
FAN DESCRIPTION	DESIGN BRAKE HP	EFFICIENCY MOTOR	EFFICIENCY DRIVE	NUMBER OF FANS	PEAK WATTS B x E x 746 / (C x D)
AH-4 - Supply Fan	25.000	93.6 %	97.0 %	1.0	20,541
Return Fan	15.000	93.0 %	97.0 %	1.0	12,404

Variable Air Volume Fans Systems

NOTE: Provide one copy of this worksheet for each fan system with a total fan system horsepower greater than 25 hp of Variable Air Volume (VAV) Systems when using the Prescriptive Approach. See Power Consumption of fans §140.4(c).

A	B	C	D	E	F
FAN DESCRIPTION	DESIGN BRAKE HP	EFFICIENCY MOTOR	EFFICIENCY DRIVE	NUMBER OF FANS	PEAK WATTS B x E x 746 / (C x D)

Totals and Adjustments

FILTER PRESSURE ADJUSTMENT Equation 140.4-A in §140.4(c) of the Building Energy Efficiency Standards.	1) TOTAL FAN SYSTEM POWER (WATTS, SUM COLUMN F)	32,946	W
	2) SUPPLY DESIGN AIRFLOW	13,200	CFM
A) If filter pressure drop (SP_a) is greater than 1 inch W. C. or 245 Pascal then enter SP_a on line 4. Enter Total Fan pressure drop across the fan (SP_f) on Line 5.	3) TOTAL FAN SYSTEM POWER INDEX (Row 1 / Row 2)[1]	2.496	W/CFM
	4) SP_a		in W.C or Pa
B) Calculate Fan Adjustment and enter on line 6.	5) SP_f		in W.C or Pa
C) Calculate Adjusted Fan Power Index and enter on Row 7	6) Fan Adjustment = 1-(SP_a – 1)/SP_f		
	7) ADJUSTED FAN POWER INDEX (Line 3 x Line 6)[1]	2.496	W/CFM

1. TOTAL FAN SYSTEM POWER INDEX or ADJUSTED FAN POWER INDEX must not exceed 0.8 w/cfm for Constant Volume systems or 1.25 w/cfm for VAV systems.

STATE OF CALIFORNIA
FAN POWER CONSUMPTION
CEC-NRCC-MCH-07-E (Revised 05/15) — CALIFORNIA ENERGY COMMISSION

CERTIFICATE OF COMPLIANCE	NRCC-MCH-07-E
Power Consumption of Fans Requirements	(Page 1 of 2)
Project Name: Math & Science Complex - Ventura College Bldg B and C	Date Prepared: 7/7/2016

Constant Volume Fans Systems

NOTE: Provide one copy of this worksheet for each fan system with a total fan system horsepower greater than 25 hp of Constant Volume Fan Systems when using the Prescriptive Approach. See Power Consumption of fans §140.4(c).

A	B	C	D	E	F
FAN DESCRIPTION	DESIGN BRAKE HP	EFFICIENCY MOTOR	EFFICIENCY DRIVE	NUMBER OF FANS	PEAK WATTS B x E x 746 / (C x D)
AH-5 - Supply Fan	0.100	85.5 %	97.0 %	1.0	90

Variable Air Volume Fans Systems

NOTE: Provide one copy of this worksheet for each fan system with a total fan system horsepower greater than 25 hp of Variable Air Volume (VAV) Systems when using the Prescriptive Approach. See Power Consumption of fans §140.4(c).

A	B	C	D	E	F
FAN DESCRIPTION	DESIGN BRAKE HP	EFFICIENCY MOTOR	EFFICIENCY DRIVE	NUMBER OF FANS	PEAK WATTS B x E x 746 / (C x D)

Totals and Adjustments

FILTER PRESSURE ADJUSTMENT Equation 140.4-A in §140.4(c) of the Building Energy Efficiency Standards.	1) TOTAL FAN SYSTEM POWER (WATTS, SUM COLUMN F)	90	W
	2) SUPPLY DESIGN AIRFLOW	1,600	CFM
A) If filter pressure drop (SP_a) is greater than 1 inch W. C. or 245 Pascal then enter SP_a on line 4. Enter Total Fan pressure drop across the fan (SP_f) on Line 5.	3) TOTAL FAN SYSTEM POWER INDEX (Row 1 / Row 2)[1]	0.056	W/CFM
	4) SP_a		in W.C or Pa
B) Calculate Fan Adjustment and enter on line 6.	5) SP_f		in W.C or Pa
C) Calculate Adjusted Fan Power Index and enter on Row 7	6) Fan Adjustment = 1-(SP_a – 1)/SP_f		
	7) ADJUSTED FAN POWER INDEX (Line 3 x Line 6)[1]	0.056	W/CFM

1. TOTAL FAN SYSTEM POWER INDEX or ADJUSTED FAN POWER INDEX must not exceed 0.8 w/cfm for Constant Volume systems or 1.25 w/cfm for VAV systems.

STATE OF CALIFORNIA
FAN POWER CONSUMPTION
CEC-NRCC-MCH-07-E (Revised 05/15) — CALIFORNIA ENERGY COMMISSION

CERTIFICATE OF COMPLIANCE	NRCC-MCH-07-E
Power Consumption of Fans Requirements	(Page 1 of 2)
Project Name: Math & Science Complex - Ventura College Bldg B and C	Date Prepared: 7/7/2016

Constant Volume Fans Systems

NOTE: Provide one copy of this worksheet for each fan system with a total fan system horsepower greater than 25 hp of Constant Volume Fan Systems when using the Prescriptive Approach. See Power Consumption of fans §140.4(c).

A	B	C	D	E	F
FAN DESCRIPTION	DESIGN BRAKE HP	EFFICIENCY MOTOR	EFFICIENCY DRIVE	NUMBER OF FANS	PEAK WATTS B x E x 746 / (C x D)
Existing AH-6 - Supply Fan	0.100	85.5 %	97.0 %	1.0	90

Variable Air Volume Fans Systems

NOTE: Provide one copy of this worksheet for each fan system with a total fan system horsepower greater than 25 hp of Variable Air Volume (VAV) Systems when using the Prescriptive Approach. See Power Consumption of fans §140.4(c).

A	B	C	D	E	F
FAN DESCRIPTION	DESIGN BRAKE HP	EFFICIENCY MOTOR	EFFICIENCY DRIVE	NUMBER OF FANS	PEAK WATTS B x E x 746 / (C x D)

Totals and Adjustments

FILTER PRESSURE ADJUSTMENT Equation 140.4-A in §140.4(c) of the Building Energy Efficiency Standards.	1) TOTAL FAN SYSTEM POWER (WATTS, SUM COLUMN F)	90	W
	2) SUPPLY DESIGN AIRFLOW	1,950	CFM
A) If filter pressure drop (SP_a) is greater than 1 inch W. C. or 245 Pascal then enter SP_a on line 4. Enter Total Fan pressure drop across the fan (SP_f) on Line 5.	3) TOTAL FAN SYSTEM POWER INDEX (Row 1 / Row 2)[1]	0.046	W/CFM
	4) SP_a		in W.C or Pa
B) Calculate Fan Adjustment and enter on line 6.	5) SP_f		in W.C or Pa
C) Calculate Adjusted Fan Power Index and enter on Row 7	6) Fan Adjustment = 1-(SP_a – 1)/SP_f		
	7) ADJUSTED FAN POWER INDEX (Line 3 x Line 6)[1]	0.046	W/CFM

1. TOTAL FAN SYSTEM POWER INDEX or ADJUSTED FAN POWER INDEX must not exceed 0.8 w/cfm for Constant Volume systems or 1.25 w/cfm for VAV systems.

STATE OF CALIFORNIA
FAN POWER CONSUMPTION
CEC-NRCC-MCH-07-E (Revised 05/15) — CALIFORNIA ENERGY COMMISSION

CERTIFICATE OF COMPLIANCE	NRCC-MCH-07-E
Power Consumption of Fans Requirements	(Page 1 of 2)
Project Name: Math & Science Complex - Ventura College Bldg B and C	Date Prepared: 7/7/2016

Constant Volume Fans Systems

NOTE: Provide one copy of this worksheet for each fan system with a total fan system horsepower greater than 25 hp of Constant Volume Fan Systems when using the Prescriptive Approach. See Power Consumption of fans §140.4(c).

A	B	C	D	E	F
FAN DESCRIPTION	DESIGN BRAKE HP	EFFICIENCY MOTOR	EFFICIENCY DRIVE	NUMBER OF FANS	PEAK WATTS B x E x 746 / (C x D)
Existing AH-7 - Supply Fan	0.100	85.5 %	97.0 %	1.0	90

Variable Air Volume Fans Systems

NOTE: Provide one copy of this worksheet for each fan system with a total fan system horsepower greater than 25 hp of Variable Air Volume (VAV) Systems when using the Prescriptive Approach. See Power Consumption of fans §140.4(c).

A	B	C	D	E	F
FAN DESCRIPTION	DESIGN BRAKE HP	EFFICIENCY MOTOR	EFFICIENCY DRIVE	NUMBER OF FANS	PEAK WATTS B x E x 746 / (C x D)

Totals and Adjustments

FILTER PRESSURE ADJUSTMENT Equation 140.4-A in §140.4(c) of the Building Energy Efficiency Standards.	1) TOTAL FAN SYSTEM POWER (WATTS, SUM COLUMN F)	90	W
	2) SUPPLY DESIGN AIRFLOW	1,950	CFM
A) If filter pressure drop (SP_a) is greater than 1 inch W. C. or 245 Pascal then enter SP_a on line 4. Enter Total Fan pressure drop across the fan (SP_f) on Line 5.	3) TOTAL FAN SYSTEM POWER INDEX (Row 1 / Row 2)[1]	0.046	W/CFM
	4) SP_a		in W.C or Pa
B) Calculate Fan Adjustment and enter on line 6.	5) SP_f		in W.C or Pa
C) Calculate Adjusted Fan Power Index and enter on Row 7	6) Fan Adjustment = 1-(SP_a – 1)/SP_f		
	7) ADJUSTED FAN POWER INDEX (Line 3 x Line 6)[1]	0.046	W/CFM

1. TOTAL FAN SYSTEM POWER INDEX or ADJUSTED FAN POWER INDEX must not exceed 0.8 w/cfm for Constant Volume systems or 1.25 w/cfm for VAV systems.

STATE OF CALIFORNIA
FAN POWER CONSUMPTION
CEC-NRCC-MCH-07-E (Revised 05/15) — CALIFORNIA ENERGY COMMISSION

CERTIFICATE OF COMPLIANCE	NRCC-MCH-07-E
Power Consumption of Fans Requirements	(Page 1 of 2)
Project Name: Math & Science Complex - Ventura College Bldg B and C	Date Prepared: 7/7/2016

Constant Volume Fans Systems

NOTE: Provide one copy of this worksheet for each fan system with a total fan system horsepower greater than 25 hp of Constant Volume Fan Systems when using the Prescriptive Approach. See Power Consumption of fans §140.4(c).

A	B	C	D	E	F
FAN DESCRIPTION	DESIGN BRAKE HP	EFFICIENCY MOTOR	EFFICIENCY DRIVE	NUMBER OF FANS	PEAK WATTS B x E x 746 / (C x D)
FC-1 - Supply Fan	0.100	85.5 %	97.0 %	1.0	90

Variable Air Volume Fans Systems

NOTE: Provide one copy of this worksheet for each fan system with a total fan system horsepower greater than 25 hp of Variable Air Volume (VAV) Systems when using the Prescriptive Approach. See Power Consumption of fans §140.4(c).

A	B	C	D	E	F
FAN DESCRIPTION	DESIGN BRAKE HP	EFFICIENCY MOTOR	EFFICIENCY DRIVE	NUMBER OF FANS	PEAK WATTS B x E x 746 / (C x D)

Totals and Adjustments

FILTER PRESSURE ADJUSTMENT Equation 140.4-A in §140.4(c) of the Building Energy Efficiency Standards.	1) TOTAL FAN SYSTEM POWER (WATTS, SUM COLUMN F)	90	W
	2) SUPPLY DESIGN AIRFLOW	200	CFM
A) If filter pressure drop (SP_a) is greater than 1 inch W. C. or 245 Pascal then enter SP_a on line 4. Enter Total Fan pressure drop across the fan (SP_f) on Line 5.	3) TOTAL FAN SYSTEM POWER INDEX (Row 1 / Row 2)[1]	0.450	W/CFM
	4) SP_a		in W.C or Pa
B) Calculate Fan Adjustment and enter on line 6.	5) SP_f		in W.C or Pa
C) Calculate Adjusted Fan Power Index and enter on Row 7	6) Fan Adjustment = 1-(SP_a – 1)/SP_f		
	7) ADJUSTED FAN POWER INDEX (Line 3 x Line 6)[1]	0.450	W/CFM

1. TOTAL FAN SYSTEM POWER INDEX or ADJUSTED FAN POWER INDEX must not exceed 0.8 w/cfm for Constant Volume systems or 1.25 w/cfm for VAV systems.

STATE OF CALIFORNIA
FAN POWER CONSUMPTION
CEC-NRCC-MCH-07-E (Revised 05/15) — CALIFORNIA ENERGY COMMISSION

CERTIFICATE OF COMPLIANCE	NRCC-MCH-07-E
Power Consumption of Fans Requirements	(Page 1 of 2)
Project Name: Math & Science Complex - Ventura College Bldg B and C	Date Prepared: 7/7/2016

Constant Volume Fans Systems

NOTE: Provide one copy of this worksheet for each fan system with a total fan system horsepower greater than 25 hp of Constant Volume Fan Systems when using the Prescriptive Approach. See Power Consumption of fans §140.4(c).

A	B	C	D	E	F
FAN DESCRIPTION	DESIGN BRAKE HP	EFFICIENCY MOTOR	EFFICIENCY DRIVE	NUMBER OF FANS	PEAK WATTS B x E x 746 / (C x D)
FC-2 - Supply Fan	0.100	85.5 %	97.0 %	1.0	90

Variable Air Volume Fans Systems

NOTE: Provide one copy of this worksheet for each fan system with a total fan system horsepower greater than 25 hp of Variable Air Volume (VAV) Systems when using the Prescriptive Approach. See Power Consumption of fans §140.4(c).

A	B	C	D	E	F
FAN DESCRIPTION	DESIGN BRAKE HP	EFFICIENCY MOTOR	EFFICIENCY DRIVE	NUMBER OF FANS	PEAK WATTS B x E x 746 / (C x D)

Totals and Adjustments

FILTER PRESSURE ADJUSTMENT Equation 140.4-A in §140.4(c) of the Building Energy Efficiency Standards.	1) TOTAL FAN SYSTEM POWER (WATTS, SUM COLUMN F)	90	W
	2) SUPPLY DESIGN AIRFLOW	200	CFM
A) If filter pressure drop (SP_a) is greater than 1 inch W. C. or 245 Pascal then enter SP_a on line 4. Enter Total Fan pressure drop across the fan (SP_f) on Line 5.	3) TOTAL FAN SYSTEM POWER INDEX (Row 1 / Row 2)[1]	0.450	W/CFM
	4) SP_a		in W.C or Pa
B) Calculate Fan Adjustment and enter on line 6.	5) SP_f		in W.C or Pa
C) Calculate Adjusted Fan Power Index and enter on Row 7	6) Fan Adjustment = 1-(SP_a – 1)/SP_f		
	7) ADJUSTED FAN POWER INDEX (Line 3 x Line 6)[1]	0.450	W/CFM

1. TOTAL FAN SYSTEM POWER INDEX or ADJUSTED FAN POWER INDEX must not exceed 0.8 w/cfm for Constant Volume systems or 1.25 w/cfm for VAV systems.

STATE OF CALIFORNIA
FAN POWER CONSUMPTION
CEC-NRCC-MCH-07-E (Revised 05/15) — CALIFORNIA ENERGY COMMISSION

CERTIFICATE OF COMPLIANCE	NRCC-MCH-07-E
Power Consumption of Fans Requirements	(Page 1 of 2)
Project Name: Math & Science Complex - Ventura College Bldg B and C	Date Prepared: 7/7/2016

Constant Volume Fans Systems

NOTE: Provide one copy of this worksheet for each fan system with a total fan system horsepower greater than 25 hp of Constant Volume Fan Systems when using the Prescriptive Approach. See Power Consumption of fans §140.4(c).

A	B	C	D	E	F
FAN DESCRIPTION	DESIGN BRAKE HP	EFFICIENCY MOTOR	EFFICIENCY DRIVE	NUMBER OF FANS	PEAK WATTS B x E x 746 / (C x D)
FC-3 - Supply Fan	0.100	85.5 %	97.0 %	1.0	90

Variable Air Volume Fans Systems

NOTE: Provide one copy of this worksheet for each fan system with a total fan system horsepower greater than 25 hp of Variable Air Volume (VAV) Systems when using the Prescriptive Approach. See Power Consumption of fans §140.4(c).

A	B	C	D	E	F
FAN DESCRIPTION	DESIGN BRAKE HP	EFFICIENCY MOTOR	EFFICIENCY DRIVE	NUMBER OF FANS	PEAK WATTS B x E x 746 / (C x D)

Totals and Adjustments

FILTER PRESSURE ADJUSTMENT Equation 140.4-A in §140.4(c) of the Building Energy Efficiency Standards.	1) TOTAL FAN SYSTEM POWER (WATTS, SUM COLUMN F)	90	W
	2) SUPPLY DESIGN AIRFLOW	200	CFM
A) If filter pressure drop (SP_a) is greater than 1 inch W. C. or 245 Pascal then enter SP_a on line 4. Enter Total Fan pressure drop across the fan (SP_f) on Line 5.	3) TOTAL FAN SYSTEM POWER INDEX (Row 1 / Row 2)[1]	0.450	W/CFM
	4) SP_a		in W.C or Pa
B) Calculate Fan Adjustment and enter on line 6.	5) SP_f		in W.C or Pa
C) Calculate Adjusted Fan Power Index and enter on Row 7	6) Fan Adjustment = 1-(SP_a – 1)/SP_f		
	7) ADJUSTED FAN POWER INDEX (Line 3 x Line 6)[1]	0.450	W/CFM

1. TOTAL FAN SYSTEM POWER INDEX or ADJUSTED FAN POWER INDEX must not exceed 0.8 w/cfm for Constant Volume systems or 1.25 w/cfm for VAV systems.

STATE OF CALIFORNIA
FAN POWER CONSUMPTION
CEC-NRCC-MCH-07-E (Revised 05/15) — CALIFORNIA ENERGY COMMISSION

CERTIFICATE OF COMPLIANCE	NRCC-MCH-07-E
Power Consumption of Fans Requirements	(Page 1 of 2)
Project Name: Math & Science Complex - Ventura College Bldg B and C	Date Prepared: 7/7/2016

Constant Volume Fans Systems

NOTE: Provide one copy of this worksheet for each fan system with a total fan system horsepower greater than 25 hp of Constant Volume Fan Systems when using the Prescriptive Approach. See Power Consumption of fans §140.4(c).

A	B	C	D	E	F
FAN DESCRIPTION	DESIGN BRAKE HP	EFFICIENCY MOTOR	EFFICIENCY DRIVE	NUMBER OF FANS	PEAK WATTS B x E x 746 / (C x D)
FC-4 - Supply Fan	0.100	85.5 %	97.0 %	1.0	90

Variable Air Volume Fans Systems

NOTE: Provide one copy of this worksheet for each fan system with a total fan system horsepower greater than 25 hp of Variable Air Volume (VAV) Systems when using the Prescriptive Approach. See Power Consumption of fans §140.4(c).

A	B	C	D	E	F
FAN DESCRIPTION	DESIGN BRAKE HP	EFFICIENCY MOTOR	EFFICIENCY DRIVE	NUMBER OF FANS	PEAK WATTS B x E x 746 / (C x D)

Totals and Adjustments

FILTER PRESSURE ADJUSTMENT Equation 140.4-A in §140.4(c) of the Building Energy Efficiency Standards.	1) TOTAL FAN SYSTEM POWER (WATTS, SUM COLUMN F)	90	W
	2) SUPPLY DESIGN AIRFLOW	200	CFM
A) If filter pressure drop (SP_a) is greater than 1 inch W. C. or 245 Pascal then enter SP_a on line 4. Enter Total Fan pressure drop across the fan (SP_f) on Line 5.	3) TOTAL FAN SYSTEM POWER INDEX (Row 1 / Row 2)[1]	0.450	W/CFM
	4) SP_a		in W.C or Pa
B) Calculate Fan Adjustment and enter on line 6.	5) SP_f		in W.C or Pa
C) Calculate Adjusted Fan Power Index and enter on Row 7	6) Fan Adjustment = 1-(SP_a – 1)/SP_f		
	7) ADJUSTED FAN POWER INDEX (Line 3 x Line 6)[1]	0.450	W/CFM

1. TOTAL FAN SYSTEM POWER INDEX or ADJUSTED FAN POWER INDEX must not exceed 0.8 w/cfm for Constant Volume systems or 1.25 w/cfm for VAV systems.

STATE OF CALIFORNIA
FAN POWER CONSUMPTION
CEC-NRCC-MCH-07-E (Revised 05/15) — CALIFORNIA ENERGY COMMISSION

CERTIFICATE OF COMPLIANCE	NRCC-MCH-07-E
Power Consumption of Fans Requirements	(Page 1 of 2)
Project Name: Math & Science Complex - Ventura College Bldg B and C	Date Prepared: 7/7/2016

Constant Volume Fans Systems

NOTE: Provide one copy of this worksheet for each fan system with a total fan system horsepower greater than 25 hp of Constant Volume Fan Systems when using the Prescriptive Approach. See Power Consumption of fans §140.4(c).

A	B	C	D	E	F
FAN DESCRIPTION	DESIGN BRAKE HP	EFFICIENCY MOTOR	EFFICIENCY DRIVE	NUMBER OF FANS	PEAK WATTS B x E x 746 / (C x D)
FC-5 - Supply Fan	0.100	85.5 %	97.0 %	1.0	90

Variable Air Volume Fans Systems

NOTE: Provide one copy of this worksheet for each fan system with a total fan system horsepower greater than 25 hp of Variable Air Volume (VAV) Systems when using the Prescriptive Approach. See Power Consumption of fans §140.4(c).

A	B	C	D	E	F
FAN DESCRIPTION	DESIGN BRAKE HP	EFFICIENCY MOTOR	EFFICIENCY DRIVE	NUMBER OF FANS	PEAK WATTS B x E x 746 / (C x D)

Totals and Adjustments

FILTER PRESSURE ADJUSTMENT Equation 140.4-A in §140.4(c) of the Building Energy Efficiency Standards.	1) TOTAL FAN SYSTEM POWER (WATTS, SUM COLUMN F)	90	W
	2) SUPPLY DESIGN AIRFLOW	2,000	CFM
A) If filter pressure drop (SP_a) is greater than 1 inch W. C. or 245 Pascal then enter SP_a on line 4. Enter Total Fan pressure drop across the fan (SP_f) on Line 5.	3) TOTAL FAN SYSTEM POWER INDEX (Row 1 / Row 2)[1]	0.045	W/CFM
	4) SP_a		in W.C or Pa
B) Calculate Fan Adjustment and enter on line 6.	5) SP_f		in W.C or Pa
C) Calculate Adjusted Fan Power Index and enter on Row 7	6) Fan Adjustment = 1-(SP_a – 1)/SP_f		
	7) ADJUSTED FAN POWER INDEX (Line 3 x Line 6)[1]	0.045	W/CFM

1. TOTAL FAN SYSTEM POWER INDEX or ADJUSTED FAN POWER INDEX must not exceed 0.8 w/cfm for Constant Volume systems or 1.25 w/cfm for VAV systems.

J & S CONSULTING ENGINEERS, INC.
ELECTRICAL ▫ MECHANICAL
FIRE PROTECTION
3111 Winona Ave., #102
Burbank, Ca 91504
Tel.: (818) 841-0303
Fax: (818) 841-8531
470 Helga Ct. Unit A
Newbury Park, Ca. 91320
Tel. (818) 398-5793
Fax: (818) 841-8531
www.jandsconsulting.com
E-Mail: jsmail@jandsconsulting.com
PROJECT No. 45461

LICENSED ARCHITECT JEAN ANN AMADOR C-22205 APRIL 30, 2019 RENEWAL DATE STATE OF CALIFORNIA

REGISTERED PROFESSIONAL ENGINEER ARNEL B. DE SILVA No. M22816 EXPIRES 09-30-18 MECHANICAL STATE OF CALIFORNIA

VENTURA COLLEGE
4667 TELEGRAPH ROAD, VENTURA, CALIFORNIA, 93003
VENTURA COUNTY COMMUNITY COLLEGE DISTRICT
MATH & SCIENCE COMPLEX

IDENTIFICATION STAMP
DIV. OF THE STATE ARCHITECT
OFFICE OF REGULATION SERVICES
APPL. 03- 117754
AC ___ FLS ___ SS ___
DATE JUL 0 5 2017

NO.	DATE	DESCRIPTION	BY
	12.19.16	DSA SUBMITTAL	

REVISIONS

DRAWN BY:	S.L.
CHECKED BY:	A.D.S.
DATE	05.12.17
JOB NO:	45461

SHEET TITLE
MECHANICAL TITLE-24 COMPLIANCE FORMS (BLDG. "B & C")

SHEET
M-9.8
DWG # 68 OF 82

Job No. 45461; FILE: N:\45461-VenturaColl\M9-8.dwg; Layout1 Ref. Files: SHEET.dwg
Plot Date: 05-11-17, 10:52am; Plot scale: 1=1-PS By: S.L. Prev. plot: 05-11-17, 10:25am
05-12-17 DSA SUBMITTAL

STATE OF CALIFORNIA
FAN POWER CONSUMPTION
CEC-NRCC-MCH-01-E (Revised 05/15)
CALIFORNIA ENERGY COMMISSION

CERTIFICATE OF COMPLIANCE	NRCC-MCH-07-E
Power Consumption of Fans Requirements	(Page 1 of 2)
Project Name: Math & Science Complex - Ventura College Bldg B and C	Date Prepared: 7/7/2016

Constant Volume Fans Systems

NOTE: Provide one copy of this worksheet for each fan system with a total fan system horsepower greater than 25 hp of Constant Volume Fan Systems when using the Prescriptive Approach. See Power Consumption of fans §140.4(c).

A	B	C	D	E	F
FAN DESCRIPTION	DESIGN BRAKE HP	EFFICIENCY		NUMBER OF FANS	PEAK WATTS B x E x 746 / (C x D)
		MOTOR	DRIVE		
Existing FC-1 - Supply Fan	0.100	85.5%	97.0%	1.0	90

Variable Air Volume Fans Systems

NOTE: Provide one copy of this worksheet for each fan system with a total fan system horsepower greater than 25 hp of Variable Air Volume (VAV) Systems when using the Prescriptive Approach. See Power Consumption of fans §140.4(c).

A	B	C	D	E	F
FAN DESCRIPTION	DESIGN BRAKE HP	EFFICIENCY		NUMBER OF FANS	PEAK WATTS B x E x 746 / (C x D)
		MOTOR	DRIVE		

Totals and Adjustments

FILTER PRESSURE ADJUSTMENT Equation 140.4-A in §140.4(c) of the Building Energy Efficiency Standards.	1) TOTAL FAN SYSTEM POWER (WATTS, SUM COLUMN F)	90	W
	2) SUPPLY DESIGN AIRFLOW	100	CFM
A) If filter pressure drop (SP_a) is greater than 1 inch W. C. or 245 Pascal then enter SP_a on line 4. Enter Total fan pressure drop across the fan (SP) on Line 5.	3) TOTAL FAN SYSTEM POWER INDEX (Row 1 / Row 2)[1]	0.900	W/CFM
	4) SP_a		In W.C or Pa
B) Calculate Fan Adjustment and enter on line 6.	5) SP_f		In W.C or Pa
C) Calculate Adjusted Fan Power Index and enter on Row 7	6) Fan Adjustment = $1-(SP_a - 1)/SP_f$		
	7) ADJUSTED FAN POWER INDEX (Line 3 x Line 6)[1]	0.900	W/CFM

1. TOTAL FAN SYSTEM POWER INDEX or ADJUSTED FAN POWER INDEX must not exceed 0.8 w/cfm for Constant Volume systems or 1.25 w/cfm for VAV systems.

STATE OF CALIFORNIA
FAN POWER CONSUMPTION
CEC-NRCC-MCH-01-E (Revised 05/15)
CALIFORNIA ENERGY COMMISSION

CERTIFICATE OF COMPLIANCE	NRCC-MCH-07-E
Power Consumption of Fans Requirements	(Page 1 of 2)
Project Name: Math & Science Complex - Ventura College Bldg B and C	Date Prepared: 7/7/2016

Constant Volume Fans Systems

NOTE: Provide one copy of this worksheet for each fan system with a total fan system horsepower greater than 25 hp of Constant Volume Fan Systems when using the Prescriptive Approach. See Power Consumption of fans §140.4(c).

A	B	C	D	E	F
FAN DESCRIPTION	DESIGN BRAKE HP	EFFICIENCY		NUMBER OF FANS	PEAK WATTS B x E x 746 / (C x D)
		MOTOR	DRIVE		
Existing FC-6 - Supply Fan	0.100	85.5%	97.0%	1.0	90

Variable Air Volume Fans Systems

NOTE: Provide one copy of this worksheet for each fan system with a total fan system horsepower greater than 25 hp of Variable Air Volume (VAV) Systems when using the Prescriptive Approach. See Power Consumption of fans §140.4(c).

A	B	C	D	E	F
FAN DESCRIPTION	DESIGN BRAKE HP	EFFICIENCY		NUMBER OF FANS	PEAK WATTS B x E x 746 / (C x D)
		MOTOR	DRIVE		

Totals and Adjustments

FILTER PRESSURE ADJUSTMENT Equation 140.4-A in §140.4(c) of the Building Energy Efficiency Standards.	1) TOTAL FAN SYSTEM POWER (WATTS, SUM COLUMN F)	90	W
	2) SUPPLY DESIGN AIRFLOW	2,010	CFM
A) If filter pressure drop (SP_a) is greater than 1 inch W. C. or 245 Pascal then enter SP_a on line 4. Enter Total fan pressure drop across the fan (SP) on Line 5.	3) TOTAL FAN SYSTEM POWER INDEX (Row 1 / Row 2)[1]	0.045	W/CFM
	4) SP_a		In W.C or Pa
B) Calculate Fan Adjustment and enter on line 6.	5) SP_f		In W.C or Pa
C) Calculate Adjusted Fan Power Index and enter on Row 7	6) Fan Adjustment = $1-(SP_a - 1)/SP_f$		
	7) ADJUSTED FAN POWER INDEX (Line 3 x Line 6)[1]	0.045	W/CFM

1. TOTAL FAN SYSTEM POWER INDEX or ADJUSTED FAN POWER INDEX must not exceed 0.8 w/cfm for Constant Volume systems or 1.25 w/cfm for VAV systems.

STATE OF CALIFORNIA
FAN POWER CONSUMPTION
CEC-NRCC-MCH-01-E (Revised 05/15)
CALIFORNIA ENERGY COMMISSION

CERTIFICATE OF COMPLIANCE	NRCC-MCH-07-E
Power Consumption of Fans Requirements	(Page 1 of 2)
Project Name: Math & Science Complex - Ventura College Bldg B and C	Date Prepared: 7/7/2016

Constant Volume Fans Systems

NOTE: Provide one copy of this worksheet for each fan system with a total fan system horsepower greater than 25 hp of Constant Volume Fan Systems when using the Prescriptive Approach. See Power Consumption of fans §140.4(c).

A	B	C	D	E	F
FAN DESCRIPTION	DESIGN BRAKE HP	EFFICIENCY		NUMBER OF FANS	PEAK WATTS B x E x 746 / (C x D)
		MOTOR	DRIVE		
Existing FC-1 - Supply Fan	0.100	85.5%	97.0%	1.0	90

Variable Air Volume Fans Systems

NOTE: Provide one copy of this worksheet for each fan system with a total fan system horsepower greater than 25 hp of Variable Air Volume (VAV) Systems when using the Prescriptive Approach. See Power Consumption of fans §140.4(c).

A	B	C	D	E	F
FAN DESCRIPTION	DESIGN BRAKE HP	EFFICIENCY		NUMBER OF FANS	PEAK WATTS B x E x 746 / (C x D)
		MOTOR	DRIVE		

Totals and Adjustments

FILTER PRESSURE ADJUSTMENT Equation 140.4-A in §140.4(c) of the Building Energy Efficiency Standards.	1) TOTAL FAN SYSTEM POWER (WATTS, SUM COLUMN F)	90	W
	2) SUPPLY DESIGN AIRFLOW	870	CFM
A) If filter pressure drop (SP_a) is greater than 1 inch W. C. or 245 Pascal then enter SP_a on line 4. Enter Total fan pressure drop across the fan (SP) on Line 5.	3) TOTAL FAN SYSTEM POWER INDEX (Row 1 / Row 2)[1]	0.103	W/CFM
	4) SP_a		In W.C or Pa
B) Calculate Fan Adjustment and enter on line 6.	5) SP_f		In W.C or Pa
C) Calculate Adjusted Fan Power Index and enter on Row 7	6) Fan Adjustment = $1-(SP_a - 1)/SP_f$		
	7) ADJUSTED FAN POWER INDEX (Line 3 x Line 6)[1]	0.103	W/CFM

1. TOTAL FAN SYSTEM POWER INDEX or ADJUSTED FAN POWER INDEX must not exceed 0.8 w/cfm for Constant Volume systems or 1.25 w/cfm for VAV systems.

STATE OF CALIFORNIA
FAN POWER CONSUMPTION
CEC-NRCC-MCH-01-E (Revised 05/15)
CALIFORNIA ENERGY COMMISSION

CERTIFICATE OF COMPLIANCE	NRCC-MCH-07-E
Power Consumption of Fans Requirements	(Page 1 of 2)
Project Name: Math & Science Complex - Ventura College Bldg B and C	Date Prepared: 7/7/2016

Constant Volume Fans Systems

NOTE: Provide one copy of this worksheet for each fan system with a total fan system horsepower greater than 25 hp of Constant Volume Fan Systems when using the Prescriptive Approach. See Power Consumption of fans §140.4(c).

A	B	C	D	E	F
FAN DESCRIPTION	DESIGN BRAKE HP	EFFICIENCY		NUMBER OF FANS	PEAK WATTS B x E x 746 / (C x D)
		MOTOR	DRIVE		
Existing FC-1 - Supply Fan	0.100	85.5%	97.0%	1.0	90

Variable Air Volume Fans Systems

NOTE: Provide one copy of this worksheet for each fan system with a total fan system horsepower greater than 25 hp of Variable Air Volume (VAV) Systems when using the Prescriptive Approach. See Power Consumption of fans §140.4(c).

A	B	C	D	E	F
FAN DESCRIPTION	DESIGN BRAKE HP	EFFICIENCY		NUMBER OF FANS	PEAK WATTS B x E x 746 / (C x D)
		MOTOR	DRIVE		

Totals and Adjustments

FILTER PRESSURE ADJUSTMENT Equation 140.4-A in §140.4(c) of the Building Energy Efficiency Standards.	1) TOTAL FAN SYSTEM POWER (WATTS, SUM COLUMN F)	90	W
	2) SUPPLY DESIGN AIRFLOW	300	CFM
A) If filter pressure drop (SP_a) is greater than 1 inch W. C. or 245 Pascal then enter SP_a on line 4. Enter Total fan pressure drop across the fan (SP) on Line 5.	3) TOTAL FAN SYSTEM POWER INDEX (Row 1 / Row 2)[1]	0.300	W/CFM
	4) SP_a		In W.C or Pa
B) Calculate Fan Adjustment and enter on line 6.	5) SP_f		In W.C or Pa
C) Calculate Adjusted Fan Power Index and enter on Row 7	6) Fan Adjustment = $1-(SP_a - 1)/SP_f$		
	7) ADJUSTED FAN POWER INDEX (Line 3 x Line 6)[1]	0.300	W/CFM

1. TOTAL FAN SYSTEM POWER INDEX or ADJUSTED FAN POWER INDEX must not exceed 0.8 w/cfm for Constant Volume systems or 1.25 w/cfm for VAV systems.

STATE OF CALIFORNIA
FAN POWER CONSUMPTION
CEC-NRCC-MCH-01-E (Revised 05/15)
CALIFORNIA ENERGY COMMISSION

CERTIFICATE OF COMPLIANCE	NRCC-MCH-07-E
Power Consumption of Fans Requirements	(Page 1 of 2)
Project Name: Math & Science Complex - Ventura College Bldg B and C	Date Prepared: 7/7/2016

Constant Volume Fans Systems

NOTE: Provide one copy of this worksheet for each fan system with a total fan system horsepower greater than 25 hp of Constant Volume Fan Systems when using the Prescriptive Approach. See Power Consumption of fans §140.4(c).

A	B	C	D	E	F
FAN DESCRIPTION	DESIGN BRAKE HP	EFFICIENCY		NUMBER OF FANS	PEAK WATTS B x E x 746 / (C x D)
		MOTOR	DRIVE		
Existing FC-12 - Supply Fan	0.100	85.5%	97.0%	1.0	90

Variable Air Volume Fans Systems

NOTE: Provide one copy of this worksheet for each fan system with a total fan system horsepower greater than 25 hp of Variable Air Volume (VAV) Systems when using the Prescriptive Approach. See Power Consumption of fans §140.4(c).

A	B	C	D	E	F
FAN DESCRIPTION	DESIGN BRAKE HP	EFFICIENCY		NUMBER OF FANS	PEAK WATTS B x E x 746 / (C x D)
		MOTOR	DRIVE		

Totals and Adjustments

FILTER PRESSURE ADJUSTMENT Equation 140.4-A in §140.4(c) of the Building Energy Efficiency Standards.	1) TOTAL FAN SYSTEM POWER (WATTS, SUM COLUMN F)	90	W
	2) SUPPLY DESIGN AIRFLOW	620	CFM
A) If filter pressure drop (SP_a) is greater than 1 inch W. C. or 245 Pascal then enter SP_a on line 4. Enter Total fan pressure drop across the fan (SP) on Line 5.	3) TOTAL FAN SYSTEM POWER INDEX (Row 1 / Row 2)[1]	0.144	W/CFM
	4) SP_a		In W.C or Pa
B) Calculate Fan Adjustment and enter on line 6.	5) SP_f		In W.C or Pa
C) Calculate Adjusted Fan Power Index and enter on Row 7	6) Fan Adjustment = $1-(SP_a - 1)/SP_f$		
	7) ADJUSTED FAN POWER INDEX (Line 3 x Line 6)[1]	0.144	W/CFM

1. TOTAL FAN SYSTEM POWER INDEX or ADJUSTED FAN POWER INDEX must not exceed 0.8 w/cfm for Constant Volume systems or 1.25 w/cfm for VAV systems.

STATE OF CALIFORNIA
FAN POWER CONSUMPTION
CEC-NRCC-MCH-01-E (Revised 05/15)
CALIFORNIA ENERGY COMMISSION

CERTIFICATE OF COMPLIANCE	NRCC-MCH-07-E
Power Consumption of Fans Requirements	(Page 1 of 2)
Project Name: Math & Science Complex - Ventura College Bldg B and C	Date Prepared: 7/7/2016

Constant Volume Fans Systems

NOTE: Provide one copy of this worksheet for each fan system with a total fan system horsepower greater than 25 hp of Constant Volume Fan Systems when using the Prescriptive Approach. See Power Consumption of fans §140.4(c).

A	B	C	D	E	F
FAN DESCRIPTION	DESIGN BRAKE HP	EFFICIENCY		NUMBER OF FANS	PEAK WATTS B x E x 746 / (C x D)
		MOTOR	DRIVE		
Existing FC-13 - Supply Fan	0.100	85.5%	97.0%	1.0	90

Variable Air Volume Fans Systems

NOTE: Provide one copy of this worksheet for each fan system with a total fan system horsepower greater than 25 hp of Variable Air Volume (VAV) Systems when using the Prescriptive Approach. See Power Consumption of fans §140.4(c).

A	B	C	D	E	F
FAN DESCRIPTION	DESIGN BRAKE HP	EFFICIENCY		NUMBER OF FANS	PEAK WATTS B x E x 746 / (C x D)
		MOTOR	DRIVE		

Totals and Adjustments

FILTER PRESSURE ADJUSTMENT Equation 140.4-A in §140.4(c) of the Building Energy Efficiency Standards.	1) TOTAL FAN SYSTEM POWER (WATTS, SUM COLUMN F)	90	W
	2) SUPPLY DESIGN AIRFLOW	1,010	CFM
A) If filter pressure drop (SP_a) is greater than 1 inch W. C. or 245 Pascal then enter SP_a on line 4. Enter Total fan pressure drop across the fan (SP) on Line 5.	3) TOTAL FAN SYSTEM POWER INDEX (Row 1 / Row 2)[1]	0.089	W/CFM
	4) SP_a		In W.C or Pa
B) Calculate Fan Adjustment and enter on line 6.	5) SP_f		In W.C or Pa
C) Calculate Adjusted Fan Power Index and enter on Row 7	6) Fan Adjustment = $1-(SP_a - 1)/SP_f$		
	7) ADJUSTED FAN POWER INDEX (Line 3 x Line 6)[1]	0.089	W/CFM

1. TOTAL FAN SYSTEM POWER INDEX or ADJUSTED FAN POWER INDEX must not exceed 0.8 w/cfm for Constant Volume systems or 1.25 w/cfm for VAV systems.

STATE OF CALIFORNIA
FAN POWER CONSUMPTION
CEC-NRCC-MCH-01-E (Revised 05/15)
CALIFORNIA ENERGY COMMISSION

CERTIFICATE OF COMPLIANCE	NRCC-MCH-07-E
Power Consumption of Fans Requirements	(Page 1 of 2)
Project Name: Math & Science Complex - Ventura College Bldg B and C	Date Prepared: 7/7/2016

Constant Volume Fans Systems

NOTE: Provide one copy of this worksheet for each fan system with a total fan system horsepower greater than 25 hp of Constant Volume Fan Systems when using the Prescriptive Approach. See Power Consumption of fans §140.4(c).

A	B	C	D	E	F
FAN DESCRIPTION	DESIGN BRAKE HP	EFFICIENCY		NUMBER OF FANS	PEAK WATTS B x E x 746 / (C x D)
		MOTOR	DRIVE		
Existing FC-14 - Supply Fan	0.100	85.5%	97.0%	1.0	90

Variable Air Volume Fans Systems

NOTE: Provide one copy of this worksheet for each fan system with a total fan system horsepower greater than 25 hp of Variable Air Volume (VAV) Systems when using the Prescriptive Approach. See Power Consumption of fans §140.4(c).

A	B	C	D	E	F
FAN DESCRIPTION	DESIGN BRAKE HP	EFFICIENCY		NUMBER OF FANS	PEAK WATTS B x E x 746 / (C x D)
		MOTOR	DRIVE		

Totals and Adjustments

FILTER PRESSURE ADJUSTMENT Equation 140.4-A in §140.4(c) of the Building Energy Efficiency Standards.	1) TOTAL FAN SYSTEM POWER (WATTS, SUM COLUMN F)	90	W
	2) SUPPLY DESIGN AIRFLOW	600	CFM
A) If filter pressure drop (SP_a) is greater than 1 inch W. C. or 245 Pascal then enter SP_a on line 4. Enter Total fan pressure drop across the fan (SP) on Line 5.	3) TOTAL FAN SYSTEM POWER INDEX (Row 1 / Row 2)[1]	0.150	W/CFM
	4) SP_a		In W.C or Pa
B) Calculate Fan Adjustment and enter on line 6.	5) SP_f		In W.C or Pa
C) Calculate Adjusted Fan Power Index and enter on Row 7	6) Fan Adjustment = $1-(SP_a - 1)/SP_f$		
	7) ADJUSTED FAN POWER INDEX (Line 3 x Line 6)[1]	0.150	W/CFM

1. TOTAL FAN SYSTEM POWER INDEX or ADJUSTED FAN POWER INDEX must not exceed 0.8 w/cfm for Constant Volume systems or 1.25 w/cfm for VAV systems.

STATE OF CALIFORNIA
FAN POWER CONSUMPTION
CEC-NRCC-MCH-01-E (Revised 05/15)
CALIFORNIA ENERGY COMMISSION

CERTIFICATE OF COMPLIANCE	NRCC-MCH-07-E
Power Consumption of Fans Requirements	(Page 1 of 2)
Project Name: Math & Science Complex - Ventura College Bldg B and C	Date Prepared: 7/7/2016

Constant Volume Fans Systems

NOTE: Provide one copy of this worksheet for each fan system with a total fan system horsepower greater than 25 hp of Constant Volume Fan Systems when using the Prescriptive Approach. See Power Consumption of fans §140.4(c).

A	B	C	D	E	F
FAN DESCRIPTION	DESIGN BRAKE HP	EFFICIENCY		NUMBER OF FANS	PEAK WATTS B x E x 746 / (C x D)
		MOTOR	DRIVE		
Existing FC-15 - Supply Fan	0.100	85.5%	97.0%	1.0	90

Variable Air Volume Fans Systems

NOTE: Provide one copy of this worksheet for each fan system with a total fan system horsepower greater than 25 hp of Variable Air Volume (VAV) Systems when using the Prescriptive Approach. See Power Consumption of fans §140.4(c).

A	B	C	D	E	F
FAN DESCRIPTION	DESIGN BRAKE HP	EFFICIENCY		NUMBER OF FANS	PEAK WATTS B x E x 746 / (C x D)
		MOTOR	DRIVE		

Totals and Adjustments

FILTER PRESSURE ADJUSTMENT Equation 140.4-A in §140.4(c) of the Building Energy Efficiency Standards.	1) TOTAL FAN SYSTEM POWER (WATTS, SUM COLUMN F)	90	W
	2) SUPPLY DESIGN AIRFLOW	600	CFM
A) If filter pressure drop (SP_a) is greater than 1 inch W. C. or 245 Pascal then enter SP_a on line 4. Enter Total fan pressure drop across the fan (SP) on Line 5.	3) TOTAL FAN SYSTEM POWER INDEX (Row 1 / Row 2)[1]	0.150	W/CFM
	4) SP_a		In W.C or Pa
B) Calculate Fan Adjustment and enter on line 6.	5) SP_f		In W.C or Pa
C) Calculate Adjusted Fan Power Index and enter on Row 7	6) Fan Adjustment = $1-(SP_a - 1)/SP_f$		
	7) ADJUSTED FAN POWER INDEX (Line 3 x Line 6)[1]	0.150	W/CFM

1. TOTAL FAN SYSTEM POWER INDEX or ADJUSTED FAN POWER INDEX must not exceed 0.8 w/cfm for Constant Volume systems or 1.25 w/cfm for VAV systems.

STATE OF CALIFORNIA
FAN POWER CONSUMPTION
CEC-NRCC-MCH-01-E (Revised 05/15)
CALIFORNIA ENERGY COMMISSION

CERTIFICATE OF COMPLIANCE	NRCC-MCH-07-E
Power Consumption of Fans Requirements	(Page 1 of 2)
Project Name: Math & Science Complex - Ventura College Bldg B and C	Date Prepared: 7/7/2016

Constant Volume Fans Systems

NOTE: Provide one copy of this worksheet for each fan system with a total fan system horsepower greater than 25 hp of Constant Volume Fan Systems when using the Prescriptive Approach. See Power Consumption of fans §140.4(c).

A	B	C	D	E	F
FAN DESCRIPTION	DESIGN BRAKE HP	EFFICIENCY		NUMBER OF FANS	PEAK WATTS B x E x 746 / (C x D)
		MOTOR	DRIVE		
RTU-18 - Supply Fan	2.000	89.5%	97.0%	1.0	2,148

Variable Air Volume Fans Systems

NOTE: Provide one copy of this worksheet for each fan system with a total fan system horsepower greater than 25 hp of Variable Air Volume (VAV) Systems when using the Prescriptive Approach. See Power Consumption of fans §140.4(c).

A	B	C	D	E	F
FAN DESCRIPTION	DESIGN BRAKE HP	EFFICIENCY		NUMBER OF FANS	PEAK WATTS B x E x 746 / (C x D)
		MOTOR	DRIVE		

Totals and Adjustments

FILTER PRESSURE ADJUSTMENT Equation 140.4-A in §140.4(c) of the Building Energy Efficiency Standards.	1) TOTAL FAN SYSTEM POWER (WATTS, SUM COLUMN F)	2,148	W
	2) SUPPLY DESIGN AIRFLOW	1,500	CFM
A) If filter pressure drop (SP_a) is greater than 1 inch W. C. or 245 Pascal then enter SP_a on line 4. Enter Total fan pressure drop across the fan (SP) on Line 5.	3) TOTAL FAN SYSTEM POWER INDEX (Row 1 / Row 2)[1]	1.432	W/CFM
	4) SP_a		In W.C or Pa
B) Calculate Fan Adjustment and enter on line 6.	5) SP_f		In W.C or Pa
C) Calculate Adjusted Fan Power Index and enter on Row 7	6) Fan Adjustment = $1-(SP_a - 1)/SP_f$		
	7) ADJUSTED FAN POWER INDEX (Line 3 x Line 6)[1]	1.432	W/CFM

1. TOTAL FAN SYSTEM POWER INDEX or ADJUSTED FAN POWER INDEX must not exceed 0.8 w/cfm for Constant Volume systems or 1.25 w/cfm for VAV systems.

STATE OF CALIFORNIA
FAN POWER CONSUMPTION
CEC-NRCC-MCH-01-E (Revised 05/15)
CALIFORNIA ENERGY COMMISSION

CERTIFICATE OF COMPLIANCE	NRCC-MCH-07-E
Power Consumption of Fans Requirements	(Page 2 of 2)
Project Name: Math & Science Complex - Ventura College Bldg B and C	Date Prepared: 7/7/2016

Constant Volume Fans Systems

NOTE: Provide one copy of this worksheet for each fan system with a total fan system horsepower greater than 25 hp of Constant Volume Fan Systems when using the Prescriptive Approach. See Power Consumption of fans §140.4(c).

A	B	C	D	E	F
FAN DESCRIPTION	DESIGN BRAKE HP	EFFICIENCY		NUMBER OF FANS	PEAK WATTS B x E x 746 / (C x D)
		MOTOR	DRIVE		
RTU-28 - Supply Fan	2.000	89.5%	97.0%	1.0	2,148

Variable Air Volume Fans Systems

NOTE: Provide one copy of this worksheet for each fan system with a total fan system horsepower greater than 25 hp of Variable Air Volume (VAV) Systems when using the Prescriptive Approach. See Power Consumption of fans §140.4(c).

A	B	C	D	E	F
FAN DESCRIPTION	DESIGN BRAKE HP	EFFICIENCY		NUMBER OF FANS	PEAK WATTS B x E x 746 / (C x D)
		MOTOR	DRIVE		

Totals and Adjustments

FILTER PRESSURE ADJUSTMENT Equation 140.4-A in §140.4(c) of the Building Energy Efficiency Standards.	1) TOTAL FAN SYSTEM POWER (WATTS, SUM COLUMN F)	2,148	W
	2) SUPPLY DESIGN AIRFLOW	1,500	CFM
A) If filter pressure drop (SP_a) is greater than 1 inch W. C. or 245 Pascal then enter SP_a on line 4. Enter Total fan pressure drop across the fan (SP) on Line 5.	3) TOTAL FAN SYSTEM POWER INDEX (Row 1 / Row 2)[1]	1.432	W/CFM
	4) SP_a		In W.C or Pa
B) Calculate Fan Adjustment and enter on line 6.	5) SP_f		In W.C or Pa
C) Calculate Adjusted Fan Power Index and enter on Row 7	6) Fan Adjustment = $1-(SP_a - 1)/SP_f$		
	7) ADJUSTED FAN POWER INDEX (Line 3 x Line 6)[1]	1.432	W/CFM

1. TOTAL FAN SYSTEM POWER INDEX or ADJUSTED FAN POWER INDEX must not exceed 0.8 w/cfm for Constant Volume systems or 1.25 w/cfm for VAV systems.

STATE OF CALIFORNIA
FAN POWER CONSUMPTION
CEC-NRCC-MCH-01-E (Revised 05/15)
CALIFORNIA ENERGY COMMISSION

CERTIFICATE OF COMPLIANCE	NRCC-MCH-07-E
Power Consumption of Fans Requirements	(Page 2 of 2)
Project Name: Math & Science Complex - Ventura College Bldg B and C	Date Prepared: 7/7/2016

Constant Volume Fans Systems

NOTE: Provide one copy of this worksheet for each fan system with a total fan system horsepower greater than 25 hp of Constant Volume Fan Systems when using the Prescriptive Approach. See Power Consumption of fans §140.4(c).

A	B	C	D	E	F
FAN DESCRIPTION	DESIGN BRAKE HP	EFFICIENCY		NUMBER OF FANS	PEAK WATTS B x E x 746 / (C x D)
		MOTOR	DRIVE		
RTU-28 - Supply Fan	2.000	89.5%	97.0%	1.0	2,148

Variable Air Volume Fans Systems

NOTE: Provide one copy of this worksheet for each fan system with a total fan system horsepower greater than 25 hp of Variable Air Volume (VAV) Systems when using the Prescriptive Approach. See Power Consumption of fans §140.4(c).

A	B	C	D	E	F
FAN DESCRIPTION	DESIGN BRAKE HP	EFFICIENCY		NUMBER OF FANS	PEAK WATTS B x E x 746 / (C x D)
		MOTOR	DRIVE		

Totals and Adjustments

FILTER PRESSURE ADJUSTMENT Equation 140.4-A in §140.4(c) of the Building Energy Efficiency Standards.	1) TOTAL FAN SYSTEM POWER (WATTS, SUM COLUMN F)	2,148	W
	2) SUPPLY DESIGN AIRFLOW	1,500	CFM
A) If filter pressure drop (SP_a) is greater than 1 inch W. C. or 245 Pascal then enter SP_a on line 4. Enter Total fan pressure drop across the fan (SP) on Line 5.	3) TOTAL FAN SYSTEM POWER INDEX (Row 1 / Row 2)[1]	1.432	W/CFM
	4) SP_a		In W.C or Pa
B) Calculate Fan Adjustment and enter on line 6.	5) SP_f		In W.C or Pa
C) Calculate Adjusted Fan Power Index and enter on Row 7	6) Fan Adjustment = $1-(SP_a - 1)/SP_f$		
	7) ADJUSTED FAN POWER INDEX (Line 3 x Line 6)[1]	1.432	W/CFM

1. TOTAL FAN SYSTEM POWER INDEX or ADJUSTED FAN POWER INDEX must not exceed 0.8 w/cfm for Constant Volume systems or 1.25 w/cfm for VAV systems.

STATE OF CALIFORNIA
FAN POWER CONSUMPTION
CEC-NRCC-MCH-01-E (Revised 05/15)
CALIFORNIA ENERGY COMMISSION

CERTIFICATE OF COMPLIANCE	NRCC-MCH-07-E
Power Consumption of Fans Requirements	(Page 2 of 2)
Project Name: Math & Science Complex - Ventura College Bldg B and C	Date Prepared: 7/7/2016

DOCUMENTATION AUTHOR'S DECLARATION STATEMENT

1. I certify that this Certificate of Compliance documentation is accurate and complete.

Documentation Author Name:	Amiel B. de Silva, P.E., LEED AP BD+C	Documentation Author Signature:	Amiel de Silva
Company:	J & S Consulting Engineers	Signature Date:	05/11/17
Address:	3111 Winona Ave., Suite 102	CEA/HERS Certification Identification (if applicable):	M22816
City/State/Zip:	Burbank, CA 91504	Phone:	(818)841 0303

RESPONSIBLE PERSON'S DECLARATION STATEMENT

I certify the following under penalty of perjury, under the laws of the State of California:

1. The information provided on this Certificate of Compliance is true and correct.
2. I am eligible under Division 3 of the Business and Professions Code to accept responsibility for the building design or system design identified on this Certificate of Compliance (responsible designer).
3. The energy features and performance specifications, materials, components, and manufactured devices for the building design or system design identified on this Certificate of Compliance conform to the requirements of Title 24, Part 1 and Part 6 of the California Code of Regulations.
4. The building design features or system design features identified on this Certificate of Compliance are consistent with the information provided on other applicable compliance documents, worksheets, calculations, plans and specifications submitted to the enforcement agency for approval with this building permit application.
5. I will ensure that a completed signed copy of this Certificate of Compliance shall be made available with the building permit(s) issued for the building, and made available to the enforcement agency for all applicable inspections. I understand that a completed signed copy of this Certificate of Compliance is required to be included with the documentation the builder provides to the building owner at occupancy.

Responsible Designer Name:	Amiel B. de Silva, P.E.	Responsible Designer Signature:	Amiel de Silva
Company:	J & S Consulting Engineers, Inc.	Date Signed:	05/11/17
Address:	3111 Winona Avenue, Suite 102	License:	M22816
City/State/Zip:	Burbank, CA 91504	Phone:	(818) 841-0303

CA Building Energy Efficiency Standards - 2013 Non

GENERAL NOTES

1. WORK INCLUDED: ALL LABOR, MATERIALS, AND EQUIPMENT NECESSARY FOR THE INSTALLATION OF A COMPLETE PLUMBING NATURAL GAS SYSTEM AS INDICATED AND DESCRIBED HEREIN.
2. GENERAL: THE DRAWINGS ARE GENERALLY DIAGRAMMATIC AND DO NOT SHOW ALL NECESSARY OFFSETS AND BENDS THAT MAY BE REQUIRED. THE LOCATION OF ALL CONDUIT, EQUIPMENT, AND RELATED ITEMS SHALL BE VERIFIED IN THE FIELD. OBTAIN AND PAY FOR FEES, TESTS, AND INSPECTIONS REQUIRED IN CONNECTION WITH WORK. ALL WORK AND MATERIALS SHALL BE IN FULL ACCORDANCE WITH ALL GOVERNING CODES AND ORDINANCES. THE CONTRACTOR SHALL VERIFY ALL CRITICAL DIMENSIONS AND REQUIREMENTS WITH FIELD CONDITIONS PRIOR TO CONSTRUCTION. FAILURE OF THE CONTRACTOR TO VERIFY THESE DIMENSIONS SHALL PLACE THE RESPONSIBILITY FOR ANY SUBSEQUENT RELOCATIONS DIRECTLY UPON THE CONTRACTOR.
3. DISCREPANCIES: IN THE EVENT THAT THE CONTRACTOR FINDS DISCREPANCIES OR OMISSIONS, OR IS IN DOUBT AS TO THE EXACT MEANING OF THE PLANS AND/OR SPECIFICATIONS, HE SHALL, BEFORE COMMENCING WORK, CONTACT THE MECHANICAL ENGINEER FOR CLARIFICATION.
4. DEFECTIVE WORK: IF INSPECTION OR TESTS SHOW DEFECTS, REPLACE SUCH DEFECTIVE WORK OR MATERIAL AND REPEAT INSPECTION AND TESTS. MAKE REPAIRS TO PIPING WITH NEW MATERIAL.
5. SUBMITTALS: WITHIN 30 DAYS AFTER AWARD OF CONTRACT, SUBMIT A COMPLETE LIST (PARTIAL NOT ACCEPTABLE) OF EQUIPMENT OF MAJOR ITEMS OF EQUIPMENT AND MATERIAL. SUBMITTALS SHALL INCLUDE THE MANUFACTURER'S SPECIFICATIONS, PHYSICAL DIMENSIONS AND RATINGS CLEARLY IDENTIFIED BY SAME IDENTIFICATION SCHEDULED ON DRAWINGS.
6. SUBSTITUTIONS: IF THE CONTRACTOR DESIRES TO USE MATERIAL OF EQUAL QUALITY OTHER THAN THAT SPECIFIED, HE SHALL HAVE REQUESTED IN WRITING APPROVAL OF EACH SUCH SUBSTITUTION AND RECEIVED APPROVAL PRIOR TO BID OPENING. A CONTRACTOR OFFERING A SUBSTITUTION SHALL ACCEPT RESPONSIBILITY FOR ITS EFFECT ON THE WORK OF ALL TRADES. ALL ADDITIONAL COSTS OF CHANGES RESULTING FROM THE INCLUSION OF SUBSTITUTIONS SHALL BE PAID BY THE CONTRACTOR WHO REQUESTED SUCH SUBSTITUTION.
7. ADEQUATELY SUPPORT PIPING AGAINST POCKETING AND DISPLACEMENT.
8. COORDINATE ALL NEW GAS PIPING, VALVES, ETC. WITH MECHANICAL/GENERAL CONTRACTOR.
9. INSTALL PIPING AS CLOSE AS POSSIBLE TO LAYOUT SHOWN. WHERE CONFLICTS OCCUR, REVISIONS SHALL BE APPROVED IN WRITING BY THE ENGINEER OF RECORD (E.O.R.).
10. UTILITY SURVEY: THE PLUMBING CONTRACTOR SHALL VERIFY THE LOCATION AND CONDITION OF EXISTING GAS PIPING PRIOR TO CONSTRUCTION. VERIFY LOCATIONS OF EXISTING PIPING, EQUIPMENT AND CONDUIT THAT MAY EFFECT LOCATIONS OF THE NEW PIPING, EQUIPMENT INSTALLATION. FAILURE OF THE CONTRACTOR TO VERIFY FIELD CONDITIONS PRIOR TO BIDDING THESE DOCUMENTS SHALL PLACE THE RESPONSIBILITY FOR ANY SUBSEQUENT REPAIRS, RELOCATIONS, OR REVISIONS DIRECTLY UPON THE CONTRACTOR.
11. GAS PIPING:
    ABOVE GRADE:
    PIPE – BLACK STEEL, SCHEDULE 40, ASTM A53, TYPE E, ERIN-US STEEL OR EQUAL. FITTINGS – MALLEABLE IRON, CLASS 125, ANSI B-16.3, THREADED OR WELDED, SCHEDULE 40, BLACK STEEL. (2" AND SMALLER – THREADED, 2-1/2" AND LARGER – WELDED).
    STOCKHAM OR EQUAL.
    ALL NEW MEDIUM PRESSURE GAS PIPING SHALL HAVE WELDED CONNECTIONS AND FLANGED VALVES.
    PLUG VALVES:
    2" AND SMALLER – ROCKWELL NO. 114 LUBRICATED PLUG TYPE, 200 LB WATER OPERATING GAUGE PRESSURE, IRON BODY AND PLUG, REGULAR PATTERN, THREADED, WALWORTH, HOMESTEAD OR EQUAL.
    2-1/2" AND LARGER – ROCKWELL NO. 115 & NO. 165 LUBRICATED PLUG TYPE, 200 LB WATER OPERATING GAUGE PRESSURE, IRON BODY AND PLUG, REGULAR PATTERN, FLANGED, WALWORTH, HOMESTEAD OR EQUAL.
12. VENT GAS REQULATORS TO BUILDING EXTERIOR. PIPE SIZE TO BE ONE SIZE LARGER THAN THE CONNECTION POINT OF REGULATOR.
13. INSPECTIONS/TESTING: TEST GAS PIPING SYSTEM IN ACCORDANCE WITH SPECIFICATIONS. IF INSPECTION OR TESTS SHOW DEFECTS, REPLACE DEFECTIVE WORK AND RETEST. TEST PRESSURE SHALL BE PER SPECIFICATIONS AND/OR PER CPC SECTION 1214.1, WHICHEVER IS GREATER.
14. PROJECT CLOSEOUT: THE PLUMBING CONTRACTOR SHALL INSTRUCT THE OWNERS REPRESENTATIVE IN THE PROPER OPERATION AND MAINTENANCE OF SYSTEM. THE CONTRACTOR SHALL PROVIDE TWO (2) COPIES OF A BOUND OPERATING AND MAINTENANCE MANUALS TO THE OWNERS REPRESENTATIVE AT THE COMPLETION OF THE PROJECT. THE MANUAL SHALL INCLUDE A PARTS LIST WITH NOMENCLATURE, MAINTENANCE SCHEDULE, AND NAME, ADDRESS, AND PHONE NUMBER OF THE LOCAL PRODUCT REPRESENTATIVE.
15. GUARANTEE: ALL LABOR AND MATERIALS FURNISHED OR INSTALLED UNDER THIS SECTION SHALL CARRY A WRITTEN ONE (1) YEAR GUARANTEE BY THE PLUMBING CONTRACTOR TO THE OWNER, COVERING MATERIALS AND WORKMANSHIP IN FULL. EXISTING EQUIPMENT/FIXTURES REUSED IN THIS PROJECT ARE NOT COVERED BY THIS GUARANTEE.
16. THE EXISTING CONDITIONS OF ABOVE GROUND STRUCTURES SUCH AS BUILDINGS, FENCES, CONCRETE PAVEMENT SLABS, EQUIPMENT SUPPORT PADS AND DRIVEWAYS AS SHOWN ON THE PLANS ARE TAKEN FROM EXISTING RECORD DRAWINGS, IT SHALL BE THE CONTRACTOR'S RESPONSIBILITY TO ACCURATELY LOCATE AND REPAIR & REPLACE ABOVE GROUND STRUCTURE THAT MAY INTERFERE WITH THE INSTALLATION OF THE WORK. ANY DAMAGE TO EXISTING STRUCTURES RESULTING FROM THIS WORK SHALL BE REPAIRED TO MATCH EXISTING AT NO ADDITIONAL COST TO OWNER.
17. CONTRACTOR SHALL BE RESPONSIBLE FOR ANY AND ALL DAMAGE WHICH MIGHT OCCUR DUE TO THE CONTRACTOR'S FAILURE TO EXACTLY LOCATE ANY AND ALL PIPING AT POINT OF CONNECTION.
18. THE CONTRACTOR SHALL FOLLOW THE LAYOUT SHOWN ON THE DRAWINGS WHEN POSSIBLE. IF CONDITIONS DICTATE SIGNIFICANT REVISIONS, CONTRACTOR SHALL OBTAIN AUTHORIZATION FROM E.O.R. PRIOR TO STARTING WORK.
19. THE CONTRACTOR SHALL USE SUFFICIENT BARRICADES AND TEMPORARY PROTECTION DEVICES TO PREVENT PEDESTRIANS OR UNAUTHORIZED INDIVIDUALS ACCESS TO ANY CONSTRUCTION ACTIVITY.
20. WHEN PROJECT REQUIRES PENETRATION OF EXISTING WALLS OR SLABS, FINISH SHALL BE RESTORED TO ORIGINAL CONDITION.

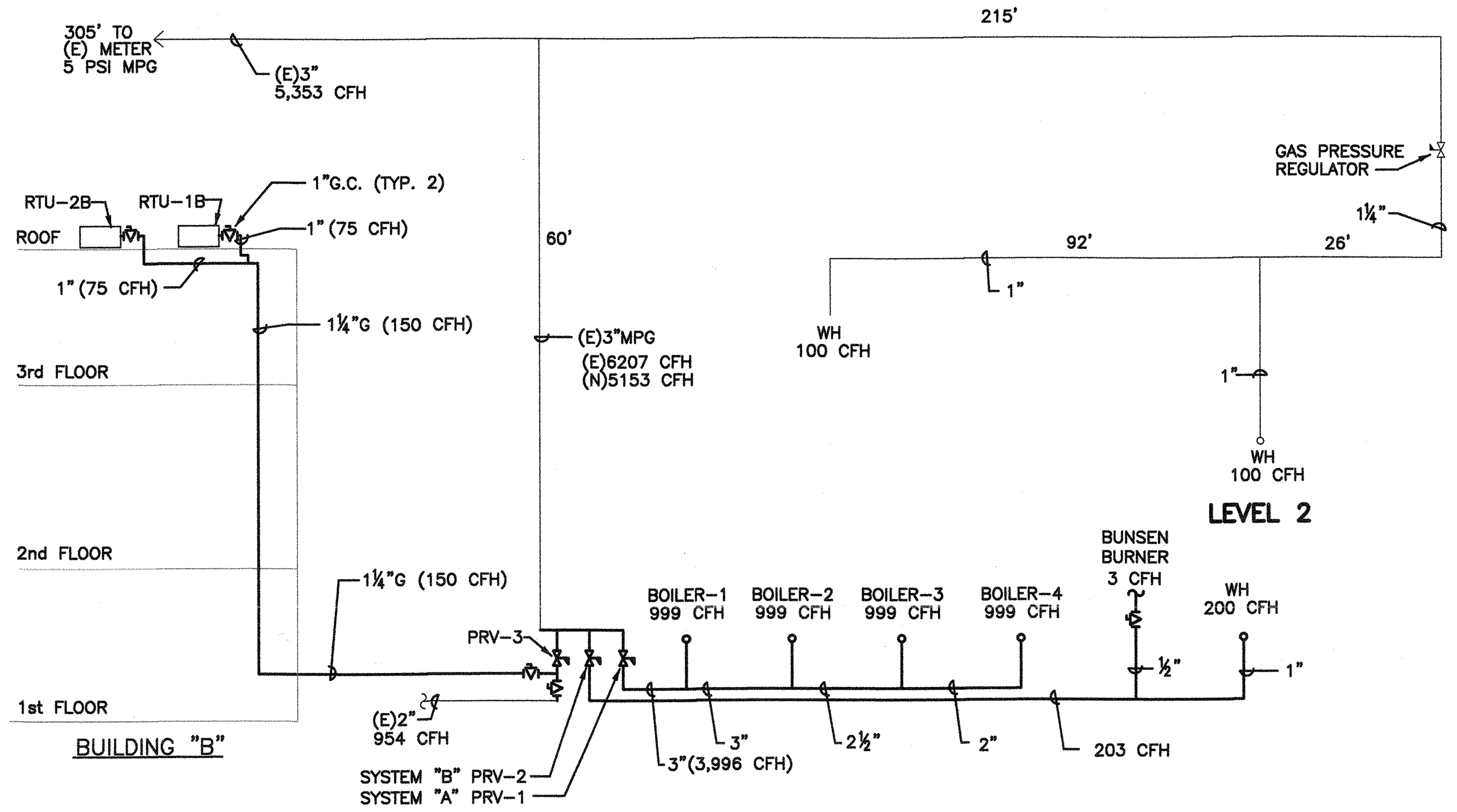

GAS LOADS:

BOILERS:	4 @	999,000 BTUH EA	=	3,996,000 BTUH
WATER HEATERS:	2 @	100,000 BTUH EA	=	200,000 BTUH
WATER HEATER:	1 @	200,000 BTUH EA	=	200,000 BTUH
BUNSEN BURNERS:	319 @	3,000 BTUH EA	=	957,000 BTUH
WATER HEATERS:	2 @	75,000 BTUH EA	=	150,000 BTUH

TOTAL LOAD = 5,503,000 BTUH (BLDG. A/B/C)

LENGTH OF SYSTEM "A" = 40' (FROM REG.)
LENGTH OF SYSTEM "B" = 80' (FROM REG.)
LENGTH OF SYSTEM "C" = 215' (FOR 2" SUPPLY)
250' (FOR 1¼" SUPPLY AT MANIFOLD)

TOTAL LOAD = 5,503000 BTUH

MAIN SIZES = (1) 3" MAIN @ 8"W.C.
(1) 2½" MAIN @ 8"W.C.
(1) 1" MAIN @ 8"W.C.

3 GAS PIPING RISER DIAGRAM
NOT TO SCALE

PLUMBING LEGEND

SYMBOL	ABBREV.	DESCRIPTION
	CW	COLD WATER
G	G	NATURAL GAS (7" WC)
	COTG	CLEANOUT TO GRADE
	GV	GATE VALVE
	CKV	CHECK VALVE
	BV	BALANCING VALVE
	GC	GAS COCK
	PRV	PRESSURE REDUCING VALVE
	—	UNION
	—	DROP
	—	RISER
	POD	POINT OF DISCONNECTION
	POC	POINT OF CONNECTION
—	I.E.	INVERT ELEVATION
—	CONN.	CONNECTION OR CONNECT
—	FF.	FINISH FLOOR
—	FLR.	FLOOR
—	EXIST.	EXISTING
—	MTD.	MOUNTED
—	U/G	UNDERGROUND
—	FR.	FROM
—	BEL.	BELOW
—	AFF.	ABOVE FINISHED FLOOR
1/P1.1	—	DETAIL NO./ SHEET NO.
	—	REMOVE EXISTING PIPING

GAS PRESSURE REGULATOR SCHEDULE

MARK	LOCATION	LOAD	DESCRIPTION
PRV-1	BOILER ROOM	3996 CFH	FISHER MODEL CS800, 3" BODY, 7/8" ORIFICE, 5.5"-8.5" SPRING RANGE, 50 MAX. INLET PRESSURE, 25 LBS, 40' TDL. VENT TO BLDG. EXTERIOR
PRV-2	BOILER ROOM	203 CFH	FISHER MODEL C5200, 1" BODY, 3/16" ORIFICE, 6"-8" SPRING RANGE, 125 MAX. INLET PRESSURE, 8 LBS, 80' TDL. VENT TO BLDG. EXTERIOR
PRV-3	BOILER ROOM	1104 CFH	FISHER MODEL CS400, 2.5" BODY, 3/4" ORIFICE, 6"-8" SPRING RANGE, 20 MAX. INLET PRESSURE, 9 LBS, 215' TDL FOR 2" PIPE, 250' TDL FOR 1¼" PIPE. VENT REGULATOR TO BLDG. EXTERIOR

J & S CONSULTING ENGINEERS, INC.
ELECTRICAL ▫ MECHANICAL
FIRE PROTECTION
3111 Winona Ave., #102
Burbank, Ca 91504
Tel.: (818) 841-0303
Fax: (818) 841-8531
470 Helga Ct. Unit A
Newbury Park, Ca. 91320
Tel. (818) 398-5793
Fax: (818) 841-8531
www.jandsconsulting.com
E-Mail: jsmail@jandsconsulting.com

PROJECT No. 45461

LICENSED ARCHITECT JEAN ANN AMADOR C-22205 APRIL 30, 2019 RENEWAL DATE STATE OF CALIFORNIA

REGISTERED PROFESSIONAL ENGINEER ARNEL B. DE SILVA No. M22816 EXPIRES 09-30-18 MECHANICAL STATE OF CALIFORNIA

VENTURA COLLEGE
4667 TELEGRAPH ROAD, VENTURA, CALIFORNIA, 93003
VENTURA COUNTY COMMUNITY COLLEGE DISTRICT
MATH & SCIENCE COMPLEX

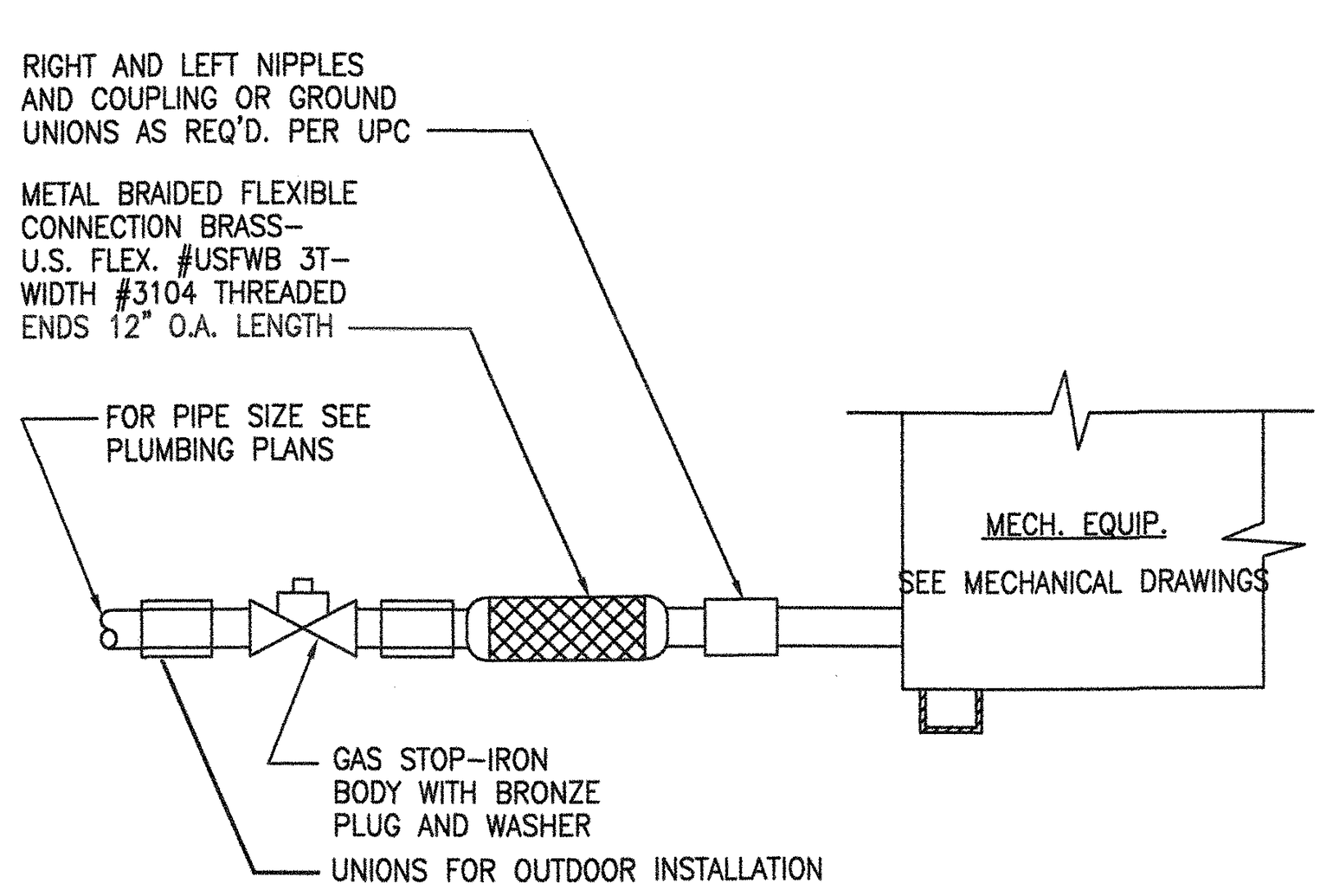

5 GAS EQUIPMENT CONNECTION DETAIL
SCALE:

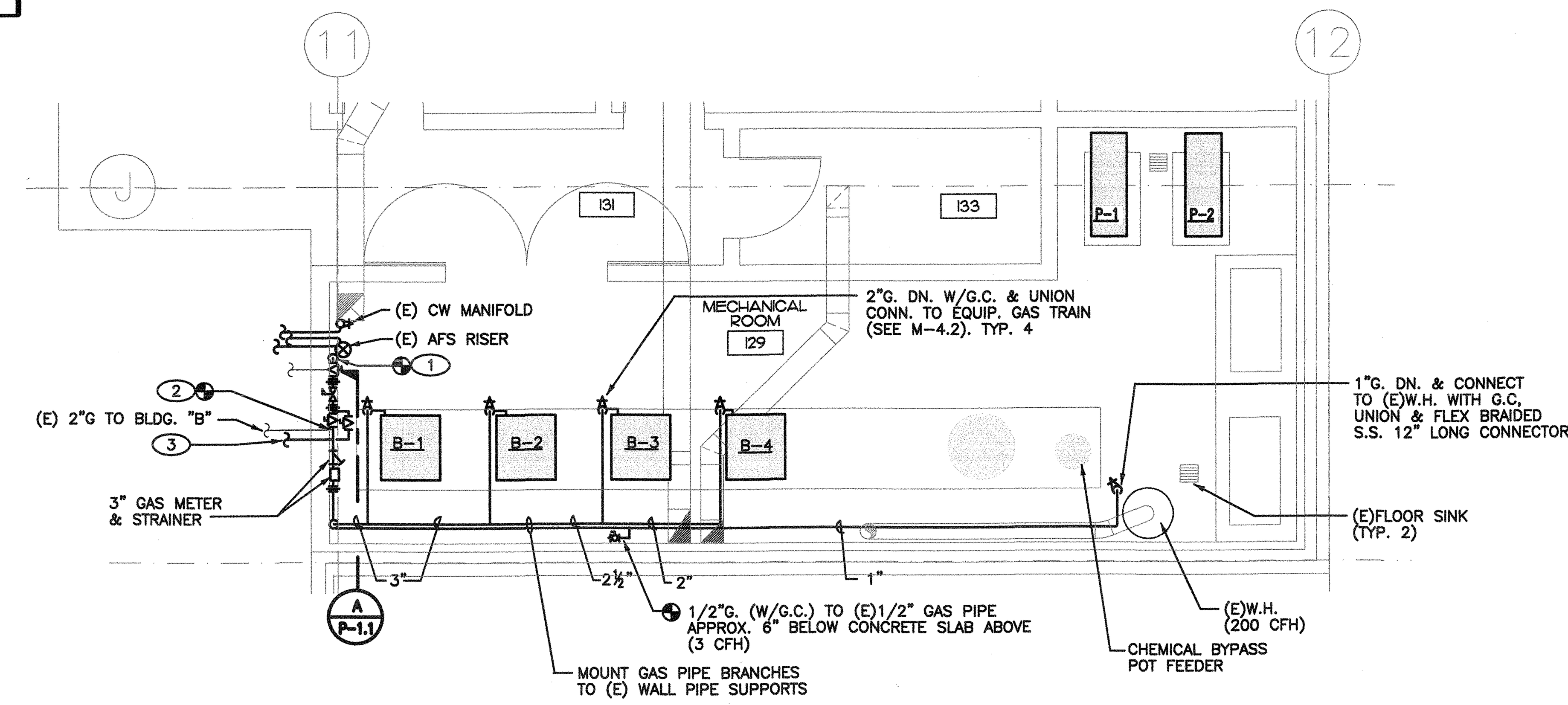

2 GAS PIPING PLAN
SCALE: 1/4"=1'-0"

NOTES:

1. 3"MPG TO (E)3"MPG PIPE THROUGH WALL (APPROX. 18" A.F.G.). 5153 CFH.
2. 2½"G TO (E)2" GAS PIPE THROUGH WALL (APPROX. 8'-0" A.F.G.). 954 CFH.
3. 1¼"G TO BLDG. "B" (A/C UNITS ON ROOF). SEE SHEET P-2.1.
4. DRESSER ROOT GAS METER, MODEL # B3-7M175 (5,400 CFH @.5 WC INLET PRESSURE). INSTALL WITH 3'-0" STRAIGHT PIPE UPSTREAM & DOWNSTREAM OF METER.

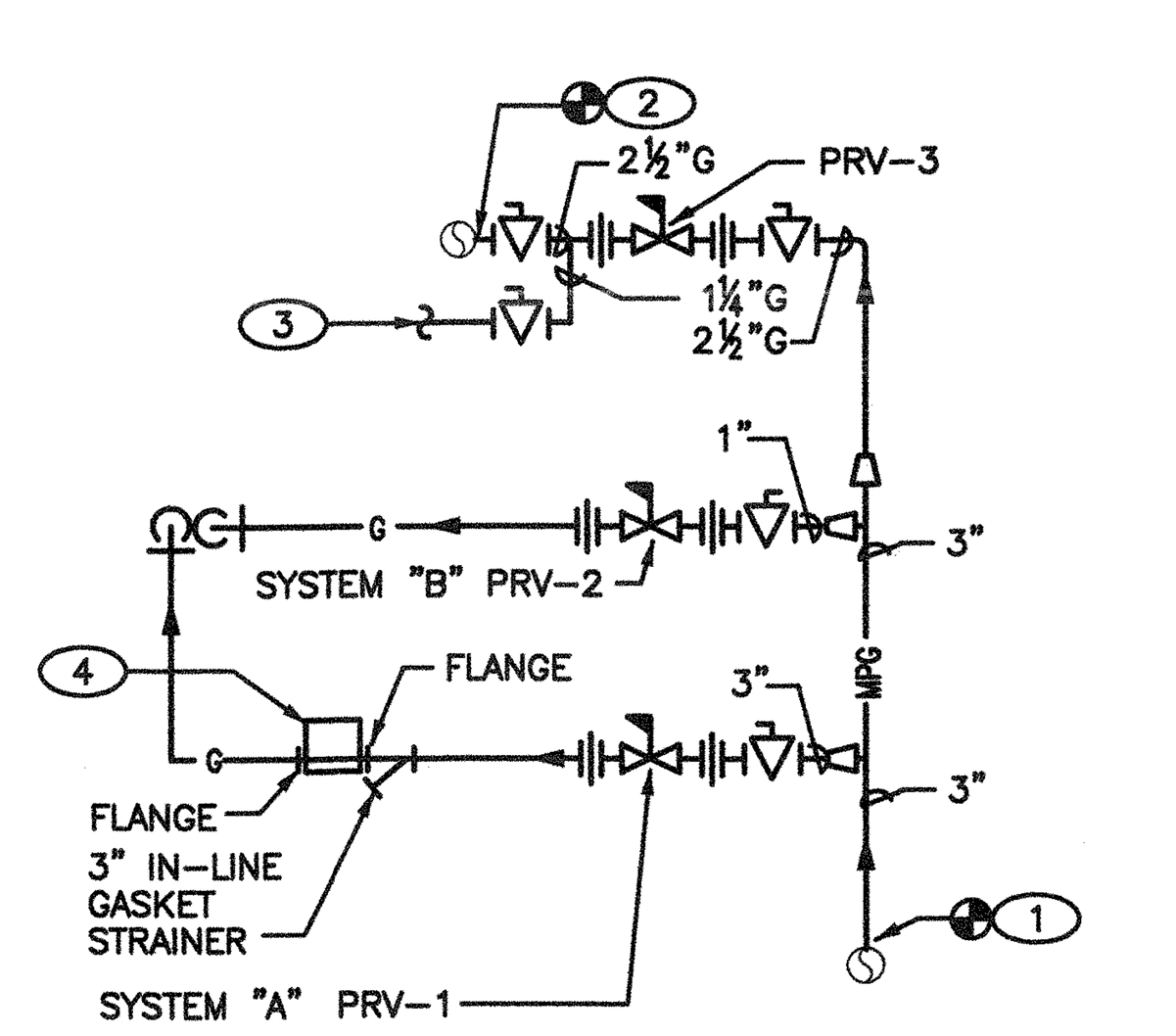

A ELEVATION
N.T.S.

IDENTIFICATION STAMP
DIV. OF THE STATE ARCHITECT
OFFICE OF REGULATION SERVICES
APPL. 03- 117754
AC ✓ FLS ✓ SS
DATE JUL 05 2017

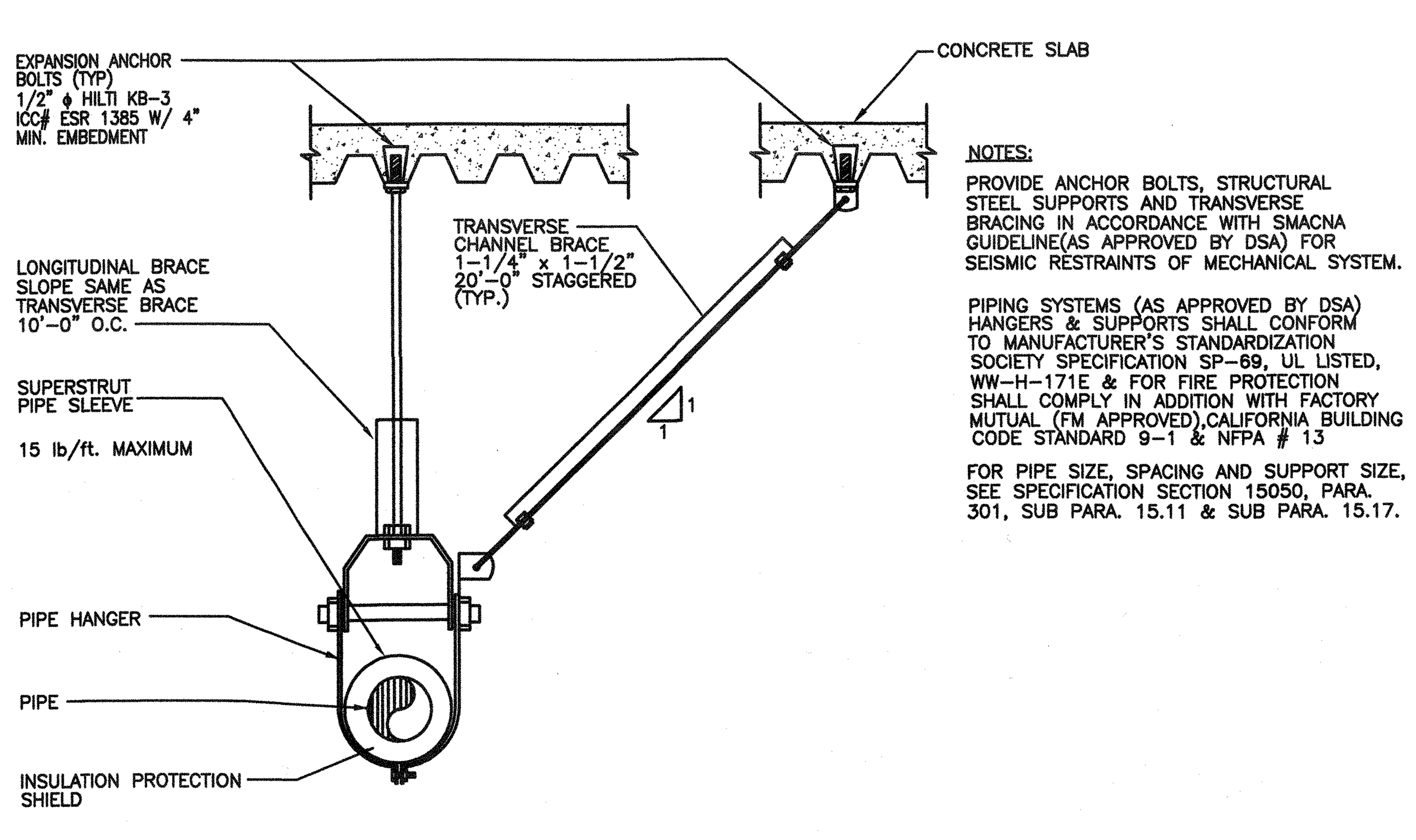

NOTES:

PROVIDE ANCHOR BOLTS, STRUCTURAL STEEL SUPPORTS AND TRANSVERSE BRACING IN ACCORDANCE WITH SMACNA GUIDELINE(AS APPROVED BY DSA) FOR SEISMIC RESTRAINTS OF MECHANICAL SYSTEM.

PIPING SYSTEMS (AS APPROVED BY DSA) HANGERS & SUPPORTS SHALL CONFORM TO MANUFACTURER'S STANDARDIZATION SOCIETY SPECIFICATION SP-69, UL LISTED, WW-H-171E & FOR FIRE PROTECTION SHALL COMPLY IN ADDITION WITH FACTORY MUTUAL (FM APPROVED),CALIFORNIA BUILDING CODE STANDARD 9-1 & NFPA # 13

FOR PIPE SIZE, SPACING AND SUPPORT SIZE, SEE SPECIFICATION SECTION 15050, PARA. 301, SUB PARA. 15.11 & SUB PARA. 15.17.

4 SINGLE PIPE HANGER SUPPORT
SCALE:

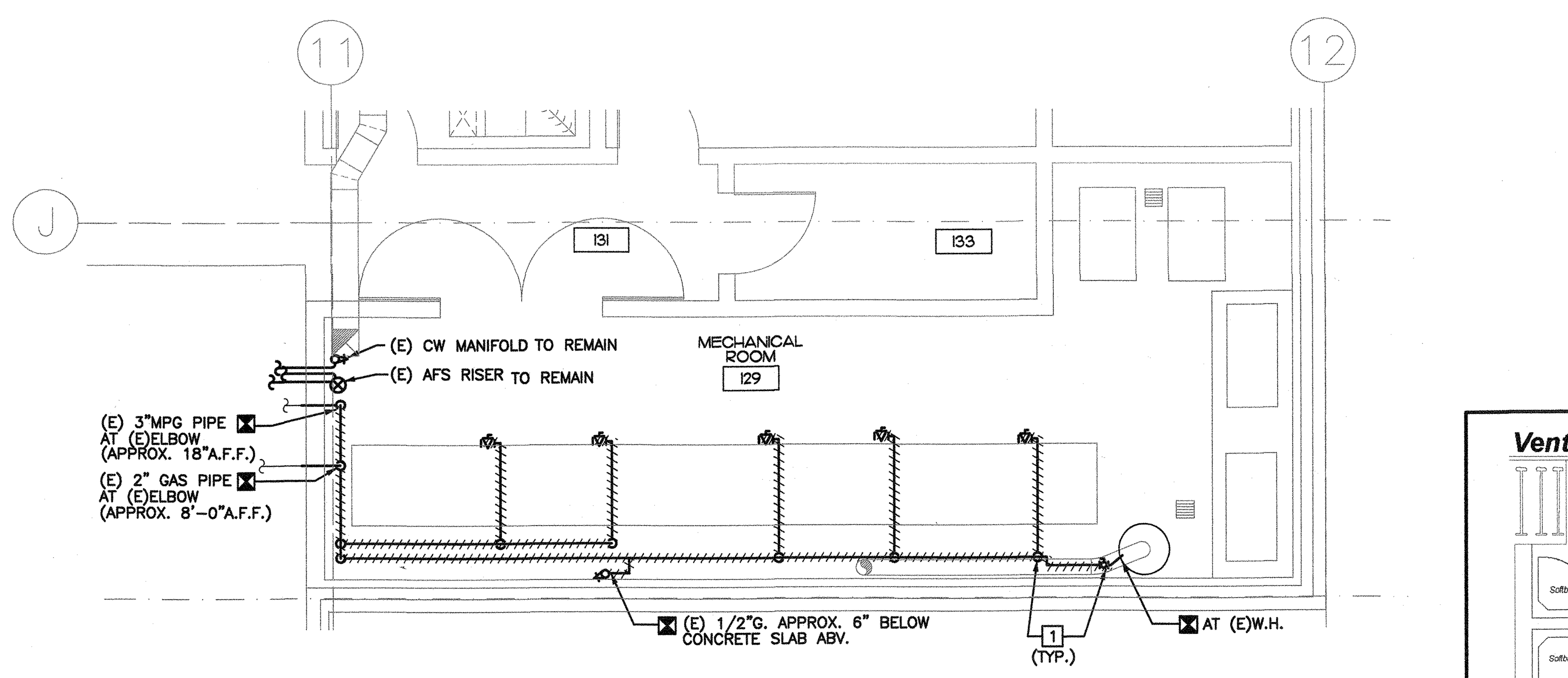

1 GAS PIPING DEMOLITION PLAN
SCALE: 1/4"=1'-0"

DEMOLITION NOTES:

1 EXISTING GAS PIPING, VALVES, FITTINGS, ETC. TO BE REMOVED.

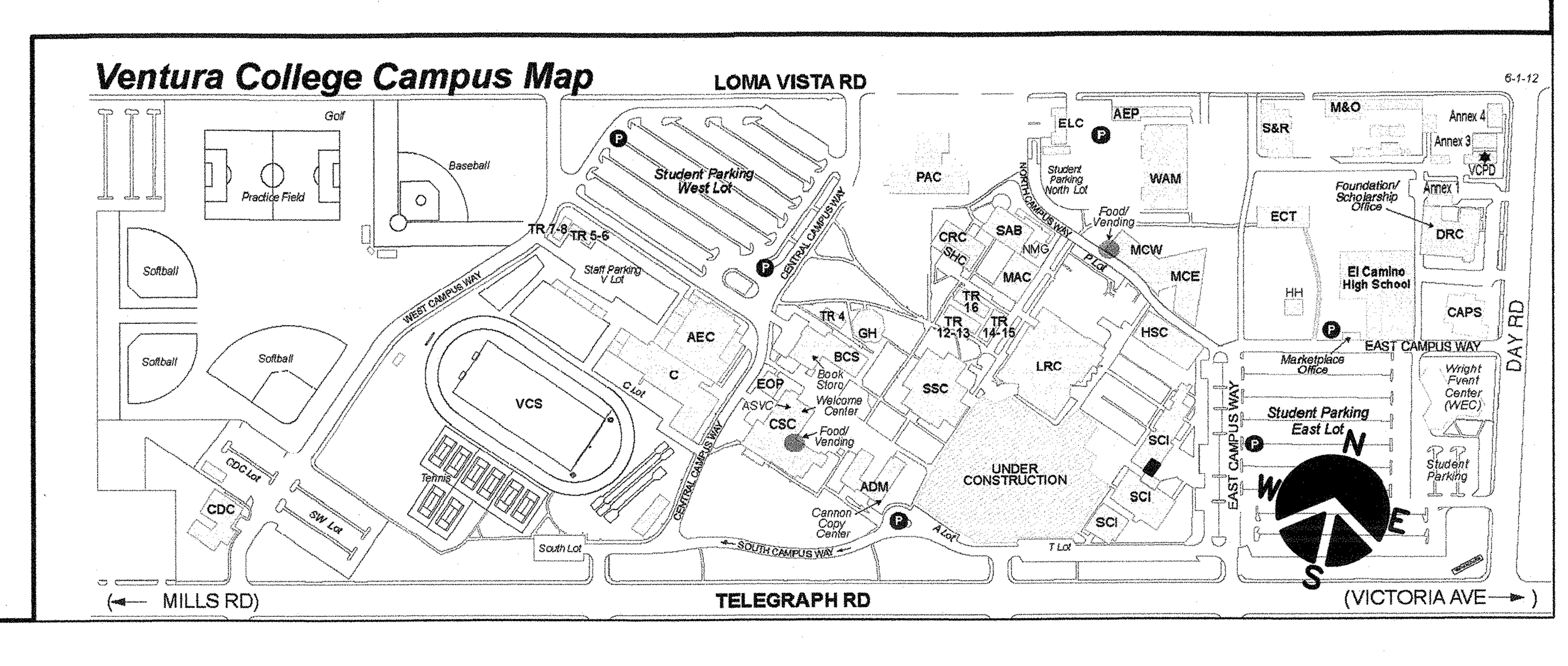

NO.	DATE	DESCRIPTION	BY
	12.19.16	DSA SUBMITTAL	

REVISIONS

DRAWN BY:	S.L.
CHECKED BY:	A.D.S.
DATE	05.12.17
JOB NO:	45461

SHEET TITLE

PLUMBING LEGEND, GENERAL NOTES, GAS PIPING PLANS, RISER DIAGRAM AND DETAILS

SHEET

P-1.1

DWG # 70 OF 82

Job No. 45461; FILE: N:\45461-VenturaColl\P1-1.dwg; Layout1 Ref. Files: X-2FLR.dwg, X-1FLR.dwg, N:\45461-VenturaColl\M1-3.dwg, X-Grid.dwg, Sheet.dwg
Plot Date: 05-11-17, 03:23pm; Plot scale: 1=1-PS By: S.L. Prev. plot: 05-11-17, 10:53am
05-12-17 DSA SUBMITTAL

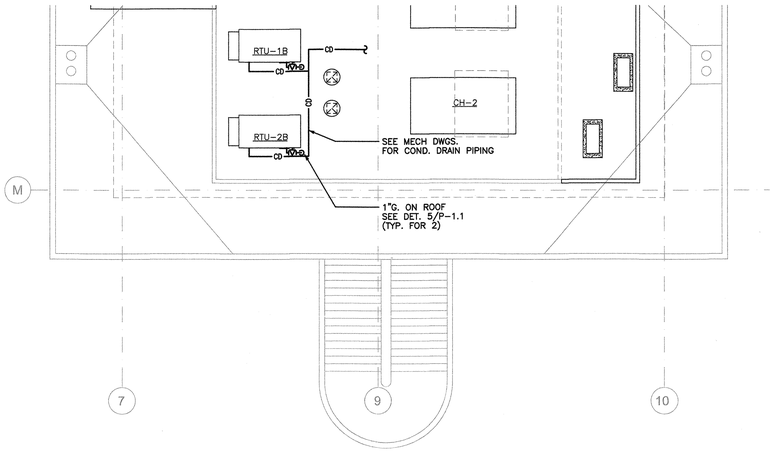

BUILDING "B"

4 PARTIAL ROOF PLAN

SCALE: 1/8"=1'-0"

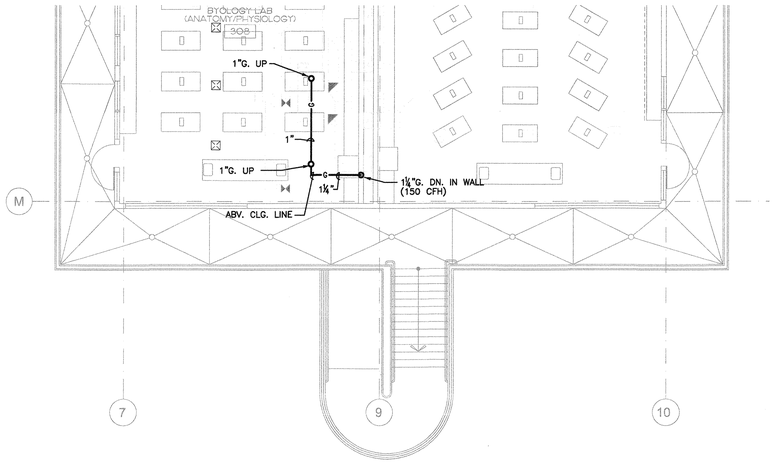

BUILDING "B"

3 PARTIAL THIRD FLOOR PLAN

SCALE: 1/8"=1'-0"

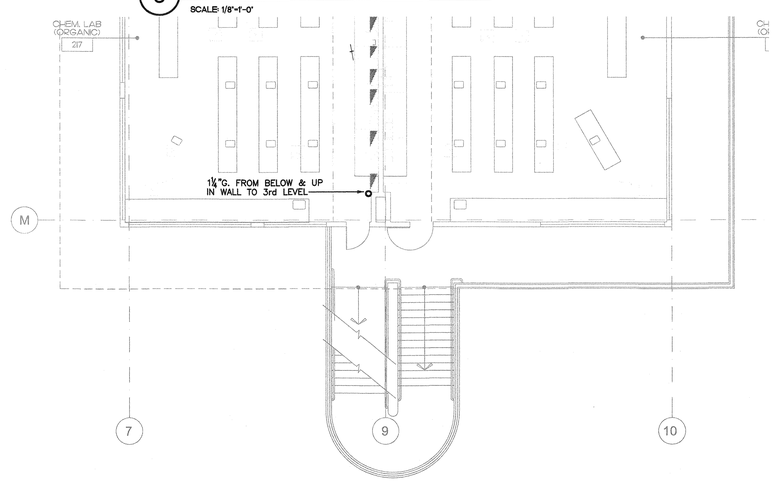

BUILDING "B"

2 PARTIAL SECOND FLOOR PLAN

SCALE: 1/8"=1'-0"

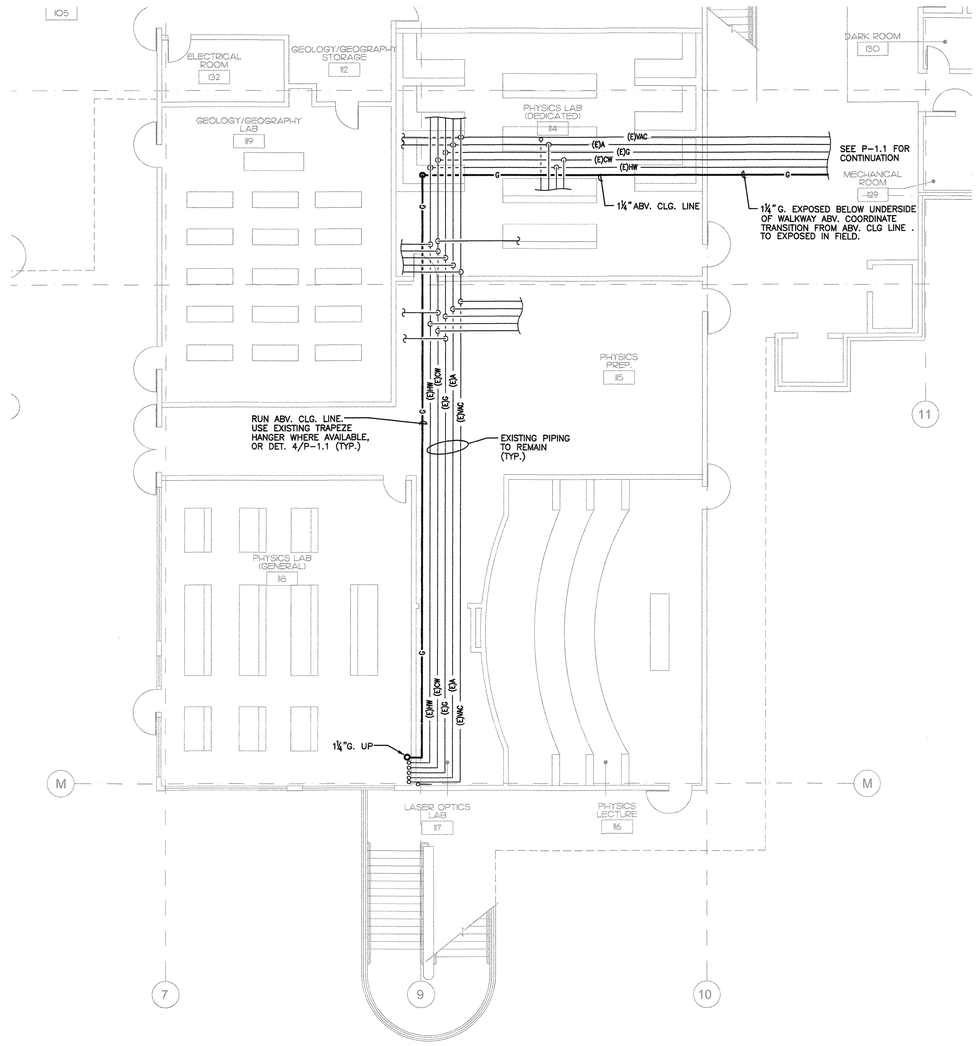

BUILDING "B"

1 PARTIAL FIRST FLOOR PLAN

SCALE: 1/8"=1'-0"

GRAPHIC SCALE: 1/8" = 1'- 0"

0 5 10 15 30

Ventura College Campus Map

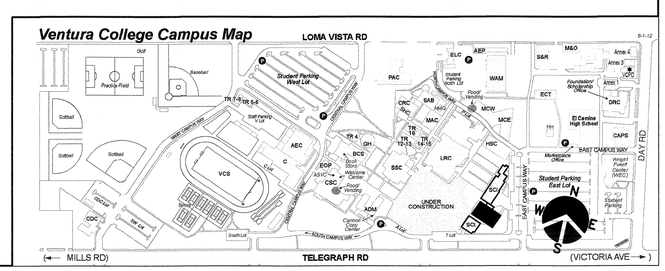
LOMA VISTA RD
Golf
Baseball
Practice Field
Softball
Softball
Softball
Student Parking West Lot
Staff Parking Lot
West Campus Way
VCS
EOP
Book Vending
Mentoring Center
CSC
Food Vending
Campus Copy Center
ADM
AEC
C
TR 1-5 TR 5-6
TR 4
GH
BCS
SSC
LRC
HSC
PAC
SAB
CRC
MAC
MCW
MCE
ELC
AEP
WAM
Student Parking Front Lot
Food Vending
M&O
S&R
Annex 4
Annex 3
Annex 1
ECT
Kinesiology/Athletic Offices
DRC
El Camino High School
CAPS
Marketplace Office
Student Parking East Lot
Wright Fusco Center (WFC)
Child Development Facility
EAST CAMPUS WAY
DAY RD
SOUTH CAMPUS WAY
UNDER CONSTRUCTION
ACC
ACC Center Parking
Soccer
Soccer
Soccer

GENERAL NOTES

1. CONTRACTOR SHOULD BE AWARE THAT WORK, ELECTRICAL IN NATURE, EXISTS ON VARIOUS PLANS. IT IS HIS DUTY TO ASSURE THAT ALL WORK SHOWN IS COVERED REGARDLESS OF LOCATION ON PLANS OR IN SPECIFICATION. INDICATIONS OF WHOM IS TO PERFORM WORK IS NOT TO BE CONSTRUED AS ABSOLUTE. THE ENGINEER IS IN NO WAY RESPONSIBLE FOR DELEGATION OF WORK, OR SCHEDULING OF VARIOUS SUBCONTRACTOR RESPONSIBILITIES, OR INVOLVED IN CONTRACTOR'S CONTRACTUAL ARRANGEMENT WITH THE OWNER.
2. THE ENTIRE INSTALLATION SHALL CONFORM TO THE REQUIREMENTS OF THE NATIONAL ELECTRICAL CODE, STATE FIRE MARSHAL REGULATIONS, AND ALL OTHER ORDINANCES HAVING JURISDICTION ALBEIT NOT SHOWN ON DRAWINGS OR SHOWN OTHERWISE.
3. THE CONTRACTOR SHALL OBTAIN AND PAY FOR ALL PERMITS AND INSPECTION REQUIREMENTS, INCLUDING ANY REVIEW FEES REGARDING FIRE/LIFE SAFETY.
4. SUBMITTAL OF BID INDICATES CONTRACTOR IS COGNIZANT OF ALL JOB SITE CONDITIONS AND WORK TO BE PERFORMED UNDER THIS CONTRACT.
5. SAW CUT ASPHALT/CONCRETE, TRENCH, BACKFILL, COMPACT AND PATCH TO MATCH ADJACENT SURFACE.
6. WHEN TRENCHING IN LAWN/LANDSCAPING AREAS, CONTRACTOR SHALL REPAIR AND/OR REPLACE ANY BROKEN IRRIGATION SYSTEM. ANY DISTURBED LAWN SHALL BE REPLACED WITH SOD TO MATCH EXISTING.
7. WHEN TRENCHING FOR NEW UNDERGROUND CONDUITS, EXERCISE CARE TO AVOID DAMAGE TO EXISTING UNDERGROUND UTILITIES.
6. DUE TO VARYING INTERPRETATIONS OF THE CEC (LATEST EDITION ACCEPTED), THE ENGINEER CANNOT ACCEPT RESPONSIBILITY FOR WORK COMMENCING BEFORE LOCAL AUTHORITY REVIEW, INCLUDING FIRE/LIFE SAFETY.
7. ALL MATERIALS AND EQUIPMENT SHALL BE NEW AND IN PERFECT CONDITION WHEN INSTALLED AND SHALL BE OF THE BEST GRADE AND OF THE SAME MANUFACTURER THROUGHOUT FOR EACH CLASS OR GROUP OF EQUIPMENT. MATERIALS SHALL BE LISTED AND APPROVED BY UNDERWRITER'S LABORATORY AND SHALL BEAR THE INSPECTION UL LABEL WHERE SUBJECT TO SUCH APPROVAL. MATERIALS SHALL MEET WITH THE APPROVAL OF THE DIVISION OF INDUSTRIAL SAFETY, AND ALL GOVERNING BODIES HAVING JURISDICTION. MATERIALS SHALL BE MANUFACTURED IN ACCORDANCE WITH APPLICABLE STANDARDS ESTABLISHED BY ANSI, NEMA, AND NBFU.
8. THE CONTRACTOR IS RESPONSIBLE FOR ALL WORK RELATED CONDITIONS, INCLUDING SITE CONDITIONS, FAULTY EQUIPMENT, MALFUNCTIONS, AND CO-ORDINATION BETWEEN SUBCONTRACTORS. ANY DISCREPANCY SHOULD BE BROUGHT TO THE ATTENTION OF THE ARCHITECT/ENGINEER BEFORE BEGINNING WORK.
9. THE INSTALLATION SHALL CONFORM TO THE REQUIREMENTS OF NECA "MANUAL OF GOOD WORKMANSHIP" (STANDARD OF INSTALLATION).
10. ELECTRICAL LAYOUT DRAWINGS ARE DIAGRAMMATIC. INSTALL THE ELECTRICAL SYSTEMS WITHOUT INTERFERING WITH DUCTS, PIPES, STRUCTURAL STEEL OR OTHER SYSTEMS.
11. PROVIDE 3/8" LOW-FRICTION POLYPROPYLENE PULL ROPE IN ALL EMPTY CONDUITS.
12. ALL UNDERGROUND CONDUITS SHALL BE PVC, SCHEDULE 40. BENDS AT RISERS AND RISERS SHALL BE PVC, SCHEDULE 80.
13. ALL EQUIPMENT USED SHALL BE UL LISTED AND LABELED BY A RECOGNIZED ELECTRICAL TESTING AGENCY.
14. ALL SYMBOLS SHOWN ON SYMBOL LIST ARE NOT NECESSARILY USED ON THIS PROJECT.
15. CUTTING AND PATCHING, REGARDLESS OF WHETHER RELATED TO NEW WORK (RELOCATION) OR TO EXISTING WORK (CHANGE ORDER), SHALL BE PERFORMED BY PERSONS KNOWLEDGEABLE OF THE MATERIAL TO BE AFFECTED. ALL CORES, CUTS, SLEEVES, AND PENETRATIONS SHALL BE CLEARED FOR LOCATION AND TYPE BY THE ARCHITECT BEFORE BEING PLACED.
16. THE INSTALLATION SHALL CONFORM TO THE REQUIREMENTS OF NECA "MANUAL OF GOOD WORKMANSHIP" (STANDARD OF INSTALLATION).
17. THE DRAWINGS INDICATE, IN A DIAGRAMMATIC MANNER, THE DESIRED LOCATIONS AND ARRANGEMENT OF THE COMPONENTS OF THE ELECTRICAL WORK. DETERMINE EXACT CONDUIT ROUTING, CONDUIT BENDS, AUXILIARY JUNCTION BOXES, SUPPORTS AND UNDEFINED CONSTRUCTION DETAILS, AS A JOB CONDITION TO BE INSTALLED IN ACCORDANCE WITH APPLICABLE CODE REQUIREMENTS. INSTALL THE ELECTRICAL SYSTEMS WITHOUT INTERFERING WITH OTHER SYSTEMS.
18. ALL POWER FEEDERS AND BRANCH CIRCUITS, REGARDLESS OF TYPE OF RACEWAY OR LOCATION SHALL CARRY A GROUND WIRE, SIZED PER N.E.C. – NO EXCEPTIONS.
19. SUBMIT FIVE (5) COPIES OF SHOP DRAWINGS AND MATERIAL LIST TO ARCHITECT/ELECTRICAL ENGINEER FOR REVIEW PRIOR TO INSTALLATION OF EQUIPMENT.
20. TEST THE ENTIRE SYSTEM TO DEMONSTRATE THAT THE ELECTRICAL COMPONENTS AND SPECIAL SYSTEMS ARE COMPLETE AND FUNCTION PROPERLY. MAKE NECESSARY CORRECTIONS AND LEAVE SYSTEMS READY FOR OPERATION.
21. COMPLETE JOB SHALL BE GUARANTEED FOR A PERIOD OF ONE (1) YEAR AFTER JOB ACCEPTANCE BY OWNER. ANY WORK, MATERIAL, OR EQUIPMENT FOUND TO BE FAULTY DURING THAT PERIOD SHALL BE CORRECTED AT ONCE, UPON WRITTEN NOTIFICATION, AT THE EXPENSE OF THE ELECTRICAL CONTRACTOR.
22. AT COMPLETION OF THE JOB, THE ELECTRICAL CONTRACTOR SHALL PROVIDE THE OWNER WITH THREE (3) COMPLETED SETS OF AS-BUILT ELECTRICAL PLANS SHOWING LOCATIONS OF FIXTURES, OUTLETS, CONDUIT RUNS AND PANELBOARD CIRCUIT NUMBERS. ELECTRICAL CONTRACTOR SHALL PROVIDE ACCURATE DIRECTORIES IN PANELBOARD FRONTS AT COMPLETION OF CONSTRUCTION. PANELBOARD DIRECTORIES SHALL INCLUDE THE SUITE NUMBER OR NAME WHERE EXISTING LOADS OCCUR.
23. SIX FULL LEGIBLE COPIES OF ALL BROCHURES, OPERATING MANUALS, CATALOGS, SHOP DRAWINGS, COMPLETE, ETC. SHALL BE TURNED OVER TO OWNER AT JOB COMPLETION.
24. ELECTRICAL INSTALLATION SHALL CONFORM TO THE REQUIREMENTS OF 2010 CEC.
25. ALL ELECTRICAL ITEMS SHOWN IN LIGHT LINES ARE EXISTING. ALL ITEMS SHOWN IN HEAVY LINES SHALL BE NEW, UNLESS NOTED OTHERWISE.
26. ALL ELECTRICAL EQUIPMENT SHALL BE BRACED OR ANCHORED FOR SEISMIC RESTRAINT AS SHOWN ON ARCHITECTURAL DRAWINGS. WHERE ANCHORAGE DETAILS ARE NOT SHOWN ON DRAWINGS THE FIELD INSTALLATION SHALL COMPLY WITH 1998 CBC SECTION 1632A AND TABLE 16A-D, AND SHALL BE SUBJECT TO THE APPROVAL OF CALIFORNIA LICENSED STRUCTURAL ENGINEER.
27. ELECTRICAL CONTRACTOR SHALL VISIT THE SITE OF THE WORK AND THOROUGHLY FAMILIARIZE HIMSELF WITH THE WORKING CONDITIONS AND THE EXACT NATURE AND EXTENT OF THE WORK TO BE DONE, TAKING INTO ACCOUNT ANY SPECIAL OR UNUSUAL FEATURES PECULIAR TO THIS JOB.
28. CONTRACTOR TO UTILIZE THE SERVICES OF AN APPROVED INDEPENDENT TESTING LABORATORY TO PERFORM MEGGER TIME-RESISTANCE INSULATION TESTING OF FEEDER CONDUCTORS AS PER SPECIFICATIONS SECTION 16120 – LOW VOLTAGE WIRES. INSULATION TESTING SHALL BE APPLIED TO ALL NEW AND EXISTING FEEDERS THAT HAVE BEEN REROUTED, MODIFIED, OR DISCONNECTED AND RECONNECTED FOR THE PURPOSE OF SWITCHBOARDS AND/OR PANELS REPLACEMENT AND/OR ADDITION.
29. CONTRACTOR TO COORDINATE WITH VENTURA COLLEGE FACILITIES MANAGEMENT PROPER PROCEDURE AND TIMING OF THE POWER SHUTDOWN. THE WORK UNDER THIS PROJECT HAS TO BE ACCOMPLISHED IN SUCH A WAY TO MINIMIZE POWER DOWNTIME AND DISRUPTION TO THE COLLEGE
30. NOT USED.
31. FOR SPLICING OF CONDUCTORS IN UNDERGROUND PULL BOXES, USE HEAVY-DUTY TWIST-ON WIRE CONNECTORS PRE-FILLED WITH 100%%% SILICONE SEALANT AND SPECIFICALLY DESIGNED TO HANDLE WIRE CONNECTIONS EXPOSED TO DAMP AND/OR WET CONDITIONS.

STANDARD SYMBOL LIST

SYMBOL	DESCRIPTION
	LIGHTING FIXTURE PER FIXTURE SCHEDULE/ SPECIFICATION AND OUTLET, WALL SURFACE MOUNTED, ON EMERGENCY CIRCUIT
	WALL MOUNTED LIGHTING FIXTURE
C / 48	FIXTURE IDENTIFICATION: "C" – TYPE OF FIXTURE "48"– TOTAL WATTAGE
Sa	SINGLE POLE SWITCH @+4'-0"; "a" INDICATES OUTLETS SWITCHED
	DUPLEX RECEPTACLE, NEMA 5-20R @ +15'-0"
	G.F.I. TYPE RECEPTACLE @ +15" OR AS NOTED
	DISCONNECT SWITCH, SIZE AND TYPE AS NOTED ("F" INDICATES FUSED)
	JUNCTION BOX-SIZE PER CODE MIN. 2¼" D
	JUNCTION BOX, CEILING MOUNTED
	JUNCTION BOX IN ACCESSIBLE CEILING SPACE
	JUNCTION BOX, WALL MOUNTED, HEIGHT AS INDICATED
	FUSED DISCONNECT SWITCH, HEAVY DUTY TYPE
	NON-FUSED DISCONNECT SWITCH, HEAVY DUTY TYPE
	CIRCUIT BREAKER
T OR	TRANSFORMER
	DISTRIBUTION PANELBOARD
	MAIN SWITCHBOARD
S	UNDERGROUND PULL BOX. 'S' – SIGNAL, 'P'-POWER, L-LIGHTING.
	CONDUIT CONCEALED IN WALL OR CEILING. SIZE AS NOTED
	CONDUIT BELOW FLOOR OR GRADE, OR IN SLAB. SIZE AS NOTED
	CONDUIT EXPOSED. SIZE AS NOTED
	CONDUIT STUB OUT
	CONDUIT UP
	CONDUIT DOWN
	CROSS LINES INDICATE NUMBER AND TYPE OF CONDUCTORS: SHORT-PHASE CONDUCTOR, LONG – NEUTRAL CONDUCTOR, LONG DOTTED-GROUND CONDUCTOR. NO CROSS LINES INDICATES 3 CONDUCTORS

STANDARD ABBREVIATIONS

A OR AMP	AMPERES	GND	GROUND
A.F.F.	ABOVE FINISH FLOOR	H.P.	HORSEPOWER
BKR.	BREAKER	J. BOX	JUNCTION BOX
B.C.	BARE COPPER	KW	KILOWATTS
C	CONDUIT	N/A	NOT APPLICABLE
CKT.	CIRCUIT	P.A.	PUBLIC ADDRESS
C.O.	CONDUIT ONLY	PH OR ø	PHASE
DISC	DISCONNECT	REC	RECEPTACLE
E.A.N.	EXCEPT AS NOTED	SW.	SWITCH
EQUIP	EQUIPMENT	TYP.	TYPICAL
EXIST. OR (E)	EXISTING	UG	UNDERGROUND
F.A.	FIRE ALARM	UGPB	UNDERGROUND POWER PULL BOX
F.L.A.	FULL LOAD AMPERES	UGSB	UNDERGROUND SIGNAL PULL BOX
F.O.	FIBER OPTIC	U.N.O.	UNLESS NOTED OTHERWISE
G.F.I.	GROUND FAULT INTERRUPTER	W.P.	WEATHERPROOF

J & S CONSULTING ENGINEERS, INC.
ELECTRICAL ▫ MECHANICAL
FIRE PROTECTION
3111 Winona Ave., #102
Burbank, Ca 91504
Tel.: (818) 841-0303
Fax: (818) 841-8531
470 Helga Ct. Unit A
Newbury Park, Ca. 91320
Tel. (818) 398-5793
Fax: (818) 841-8531
www.jandsconsulting.com
E-Mail: jsmail@jandsconsulting.com

PROJECT No. 45461

LICENSED ARCHITECT JEAN ANN AMADOR C-22205 APRIL 30, 2019 RENEWAL DATE STATE OF CALIFORNIA

REGISTERED PROFESSIONAL ENGINEER IGOR SHNAYDER No. E11075 EXPIRES 06-30-17 ELECTRICAL STATE OF CALIFORNIA

VENTURA COLLEGE
4667 TELEGRAPH ROAD, VENTURA, CALIFORNIA, 93003
VENTURA COUNTY COMMUNITY COLLEGE DISTRICT
MATH & SCIENCE COMPLEX

IDENTIFICATION STAMP
DIV. OF THE STATE ARCHITECT
OFFICE OF REGULATION SERVICES
APPL. 03- 117754
AC ___ FLS ___ SS ___
DATE JUL 05 2017

NO.	DATE	DESCRIPTION	BY
	12.19.16	DSA SUBMITTAL	

REVISIONS

DRAWN BY: S.L.
CHECKED BY: N.J.
DATE 05.12.17
JOB NO: 45461
SHEET TITLE

ELECTRICAL SYMBOL LIST AND GENERAL NOTES

SHEET

E-0.1

Job No. 45461; FILE: N:\45461-VenturaColl\E0-1.dwg; Layout1 Ref. Files: sheet.dwg
Plot Date: 05-11-17, 10:54am; Plot scale: 1=1-PS By: S.L. Prev. plot: 05-11-17, 10:27am
05-12-17 DSA SUBMITTAL

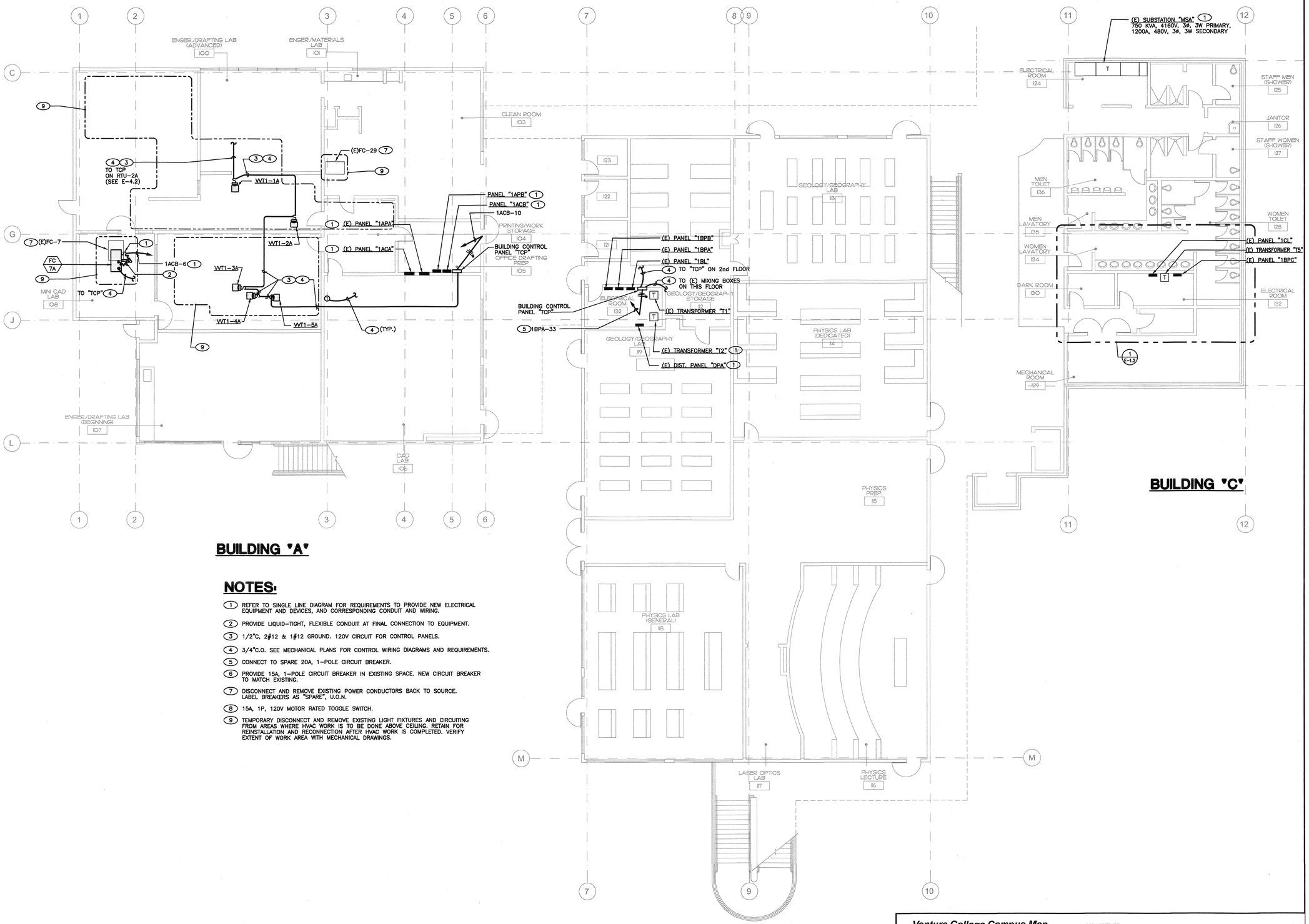

BUILDING "A"

BUILDING "B"

BUILDING "C"

NOTES:

1. REFER TO SINGLE LINE DIAGRAM FOR REQUIREMENTS TO PROVIDE NEW ELECTRICAL EQUIPMENT AND DEVICES, AND CORRESPONDING CONDUIT AND WIRING.
2. PROVIDE LIQUID-TIGHT, FLEXIBLE CONDUIT AT FINAL CONNECTION TO EQUIPMENT.
3. 1/2"C, 2#12 & 1#12 GROUND. 120V CIRCUIT FOR CONTROL PANELS.
4. 3/4"C.O. SEE MECHANICAL PLANS FOR CONTROL WIRING DIAGRAMS AND REQUIREMENTS.
5. CONNECT TO SPARE 20A, 1-POLE CIRCUIT BREAKER.
6. PROVIDE 15A, 1-POLE CIRCUIT BREAKER IN EXISTING SPACE. NEW CIRCUIT BREAKER TO MATCH EXISTING.
7. DISCONNECT AND REMOVE EXISTING POWER CONDUCTORS BACK TO SOURCE. LABEL BREAKERS AS "SPARE", U.O.N.
8. 15A, 1P, 120V MOTOR RATED TOGGLE SWITCH.
9. TEMPORARY DISCONNECT AND REMOVE EXISTING LIGHT FIXTURES AND CIRCUITING FROM AREAS WHERE HVAC WORK IS TO BE DONE ABOVE CEILING. RETAIN FOR REINSTALLATION AND RECONNECTION AFTER HVAC WORK IS COMPLETED. VERIFY EXTENT OF WORK AREA WITH MECHANICAL DRAWINGS.

FIRST FLOOR ELECTRICAL PLAN

SCALE: 1/8" = 1'-0"

GRAPHIC SCALE: 1/8" = 1'- 0"

0 5 10 15 30

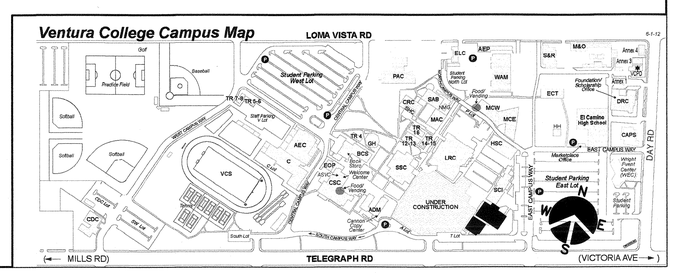

J & S CONSULTING ENGINEERS, INC.
ELECTRICAL ▫ MECHANICAL
FIRE PROTECTION
3111 Winona Ave., #102
Burbank, Ca 91504
Tel.: (818) 841-0303
Fax: (818) 841-8531
470 Helga Ct. Unit A
Newbury Park, Ca. 91320
Tel. (818) 398-5793
Fax: (818) 841-8531
www.jandsconsulting.com
E-Mail: jsmail@jandsconsulting.com

PROJECT No. 45461

LICENSED ARCHITECT — JEAN ANN MAJOR — C-22205 — APRIL 30, 2019 RENEWAL DATE — STATE OF CALIFORNIA

REGISTERED PROFESSIONAL ENGINEER — JOHN SHIVA MAJOR — No. E11075 — EXPIRES 06-30-17 — ELECTRICAL — STATE OF CALIFORNIA

VENTURA COLLEGE

4667 TELEGRAPH ROAD, VENTURA, CA 93003
VENTURA COUNTY COMMUNITY COLLEGE DISTRICT
MATH & SCIENCE COMPLEX

IDENTIFICATION STAMP
DIV. OF THE STATE ARCHITECT
OFFICE OF REGULATION SERVICES
APPL. 03- 117754
AC — FLS — SS
DATE JUL 05 2017

NO.	DATE	DESCRIPTION	BY
	12.19.16	DSA SUBMITTAL	

REVISIONS

DRAWN BY:	S.L.
CHECKED BY:	N.J.
DATE	05.12.17
JOB NO:	45461

SHEET TITLE

FIRST FLOOR ELECTRICAL PLAN

SHEET

E-1.1

DWG # 73 OF 87

05-12-17 DSA SUBMITTAL

Job No. 45461, FLS, N:\45461-Ventura\CAD\1-Engrg\Import\ Ref. Files: N:\45461-Ventura\CAD\CONSTRUCTION\E-1.dwg, E2-CONSTRUCTION.dwg, M1-1.dwg, X-1FLR.dwg, X-2ELC.dwg, N:\45461-Ventura\CAD\E1-2.dwg, Sheet.dwg
Plot Date: 05-11-17, 10:54am, Plot scale: 1=1.00 by SLC Files used: 05-11-17, 1025.ctb

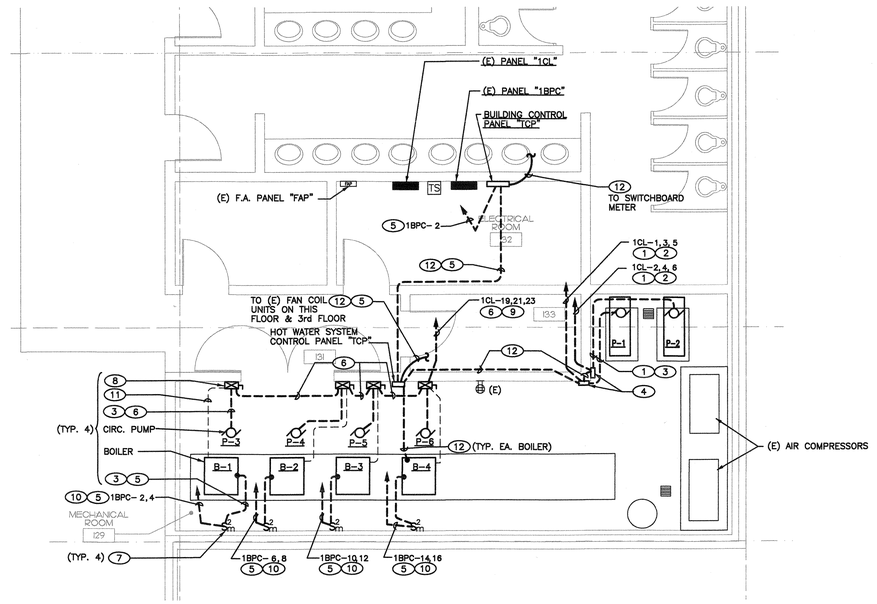

ELECTRICAL PLAN

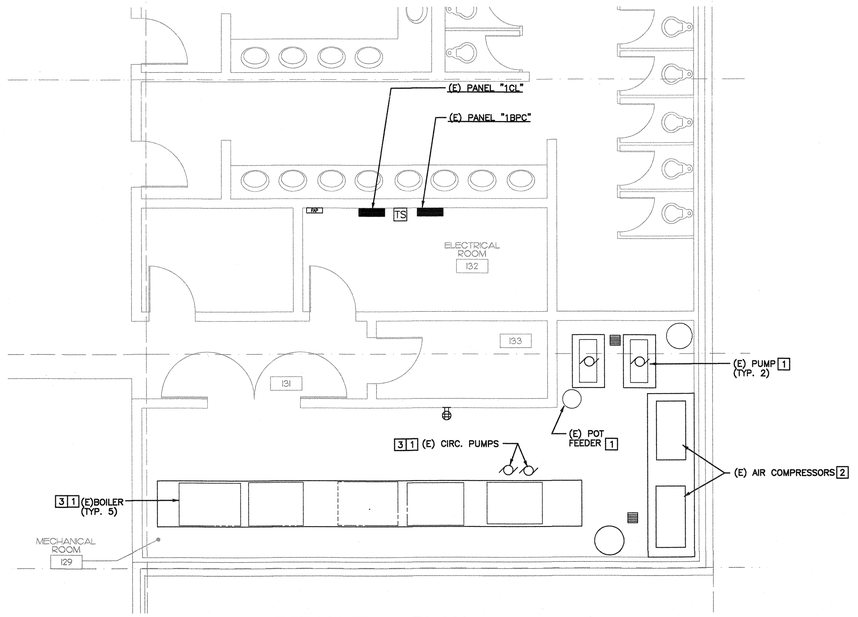

DEMOLITION PLAN

1 BUILDING "C" MECHANICAL ROOM 128

SCALE: 1/4"=1'-0"

GRAPHIC SCALE: 1/4" = 1'- 0"

0 2 4 6 12

NOTES:

1. 3/4"C, 3#8 & 1#10 GND.
2. REPLACE EXISTING 20A,3P CIRCUIT BREAKER IN PANEL WITH 60A,3P BREAKER.
3. PROVIDE LIQUID-TIGHT FLEX CONDUIT FOR FINAL CONNECTION TO EQUIPMENT.
4. WALL MOUNTED VFD.
5. 1/2"C, 2#12 & 1#12 GND.
6. 1/2"C, 3#12 & 1#12 GND.
7. 20A, 2-POLE, 250VAC, MOTOR RATED, W.P. TOGGLE SWITCH AT +48"A.F.F.
8. COMBINATION MOTOR STARTER/FUSED DISCONNECT SWITCH, 30A, 3-POLE, 480VAC, 6A FUSES, SIZE 00 STARTER. VERIFY CONTROL COIL VOLTAGE WITH BOILER SPECS.
9. PROVIDE 15A, 3P, 480VAC CIRCUIT BREAKER IN EXISTING PANEL SPACE.
10. PROVIDE 20A, 2P, 250VAC CIRCUIT BREAKER IN EXISTING PANEL SPACE.
11. 1/2"C.O. FOR CONTROL WIRING. FIELD VERIFY WIRING REQUIREMENTS WITH BOILER SPECS.
12. 3/4"C.O. SEE MECHANICAL PLANS FOR CONTROL WIRING DIAGRAMS AND REQUIREMENTS.

DEMOLITION NOTES:

1. DISCONNECT AND REMOVE EXISTING CONDUCTORS BACK TO SOURCE. DISCONNECT AND REMOVE EXISTING EXPOSED RACEWAYS.
2. TO REMAIN.
3. LABEL CIRCUIT BREAKERS AT PANEL AS "SPARE".

Ventura College Campus Map — LOMA VISTA RD — E-1.2

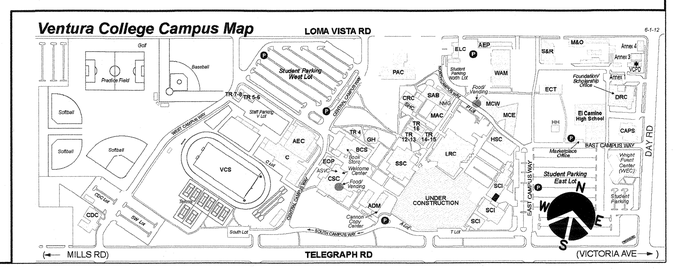

J & S CONSULTING ENGINEERS, INC.
ELECTRICAL ▫ MECHANICAL
FIRE PROTECTION
3111 Winona Ave., #102
Burbank, Ca 91504
Tel.: (818) 841-0303
Fax: (818) 841-8531
470 Helga Ct. Unit A
Newbury Park, Ca. 91320
Tel. (818) 398-5793
Fax: (818) 841-8531
www.jandsconsulting.com
E-Mail: jsmail@jandsconsulting.com

PROJECT No. 45461

LICENSED ARCHITECT KELLY ANN JAMISON C-22205 APRIL 30, 2019 RENEWAL DATE STATE OF CALIFORNIA

REGISTERED PROFESSIONAL ENGINEER SAMI SHNAYDER No. E11075 EXPIRES 08-30-17 ELECTRICAL STATE OF CALIFORNIA

VENTURA COLLEGE

4667 TELEGRAPH ROAD, VENTURA, CALIFORNIA, 93003
VENTURA COUNTY COMMUNITY COLLEGE DISTRICT

MATH & SCIENCE COMPLEX

IDENTIFICATION STAMP
DIV. OF THE STATE ARCHITECT
OFFICE OF REGULATION SERVICES
APPL. 03- 117754
AC. — FLS — SS
DATE JUL 05 2017

NO.	DATE	DESCRIPTION	BY
	12.19.16	DSA SUBMITTAL	

REVISIONS

DRAWN BY:	S.L.
CHECKED BY:	N.J.
DATE	05.12.17
JOB NO:	45461

SHEET TITLE

BUILDING "C" MECHANICAL ROOM ELECTRICAL PLANS

SHEET

E-1.2

DWG # 74 OF 87

Job No. 45461 FILE: M:\45461-Ventura\DSA\E1-2.dwg, Layout1, Ref_Dwg, X-0.05.dwg, X=297.0-dwg, X=110.0.dwg, Shield.dwg, sh1-3.dwg
Plot Date: 05-11-17; 10:50am; Plot scale: 1=1.25" by S.L. Xrev. date: 05-11-17; 10:23am
05-12-17 DSA SUBMITTAL

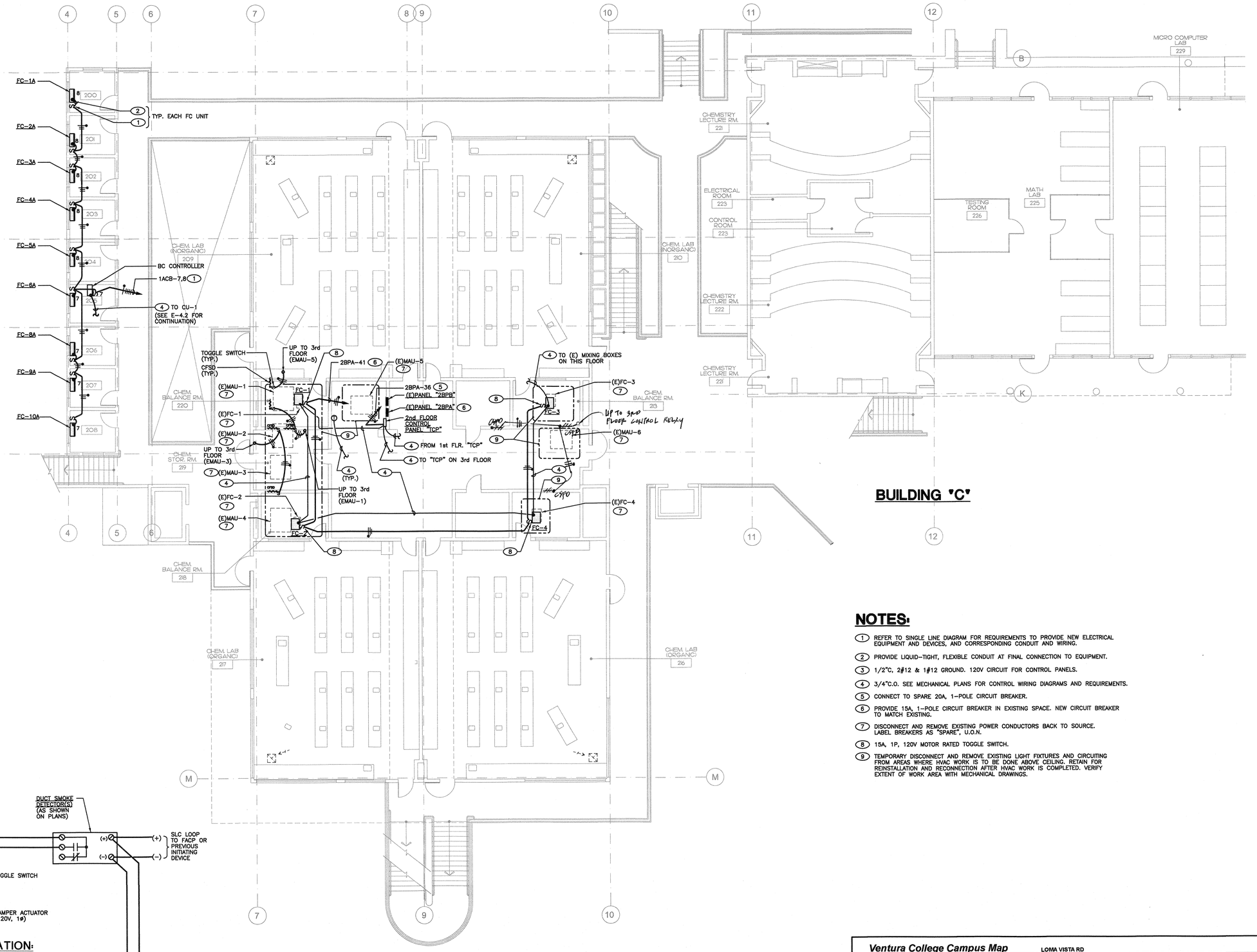

NOTES:

1. REFER TO SINGLE LINE DIAGRAM FOR REQUIREMENTS TO PROVIDE NEW ELECTRICAL EQUIPMENT AND DEVICES, AND CORRESPONDING CONDUIT AND WIRING.
2. PROVIDE LIQUID-TIGHT, FLEXIBLE CONDUIT AT FINAL CONNECTION TO EQUIPMENT.
3. 1/2"C, 2#12 & 1#12 GROUND. 120V CIRCUIT FOR CONTROL PANELS.
4. 3/4"C.O. SEE MECHANICAL PLANS FOR CONTROL WIRING DIAGRAMS AND REQUIREMENTS.
5. CONNECT TO SPARE 20A, 1-POLE CIRCUIT BREAKER.
6. PROVIDE 15A, 1-POLE CIRCUIT BREAKER IN EXISTING SPACE. NEW CIRCUIT BREAKER TO MATCH EXISTING.
7. DISCONNECT AND REMOVE EXISTING POWER CONDUCTORS BACK TO SOURCE. LABEL BREAKERS AS "SPARE", U.O.N.
8. 15A, 1P, 120V MOTOR RATED TOGGLE SWITCH.
9. TEMPORARY DISCONNECT AND REMOVE EXISTING LIGHT FIXTURES AND CIRCUITING FROM AREAS WHERE HVAC WORK IS TO BE DONE ABOVE CEILING. RETAIN FOR REINSTALLATION AND RECONNECTION AFTER HVAC WORK IS COMPLETED. VERIFY EXTENT OF WORK AREA WITH MECHANICAL DRAWINGS.

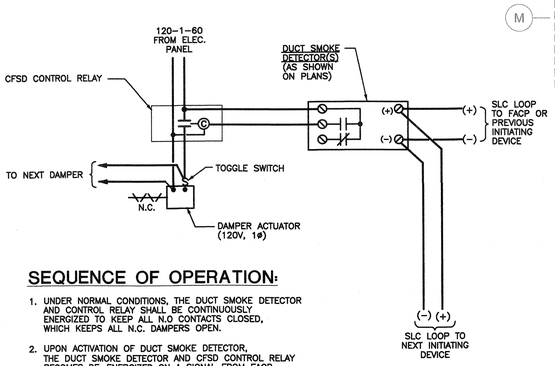

SEQUENCE OF OPERATION:

1. UNDER NORMAL CONDITIONS, THE DUCT SMOKE DETECTOR AND CONTROL RELAY SHALL BE CONTINUOUSLY ENERGIZED TO KEEP ALL N.O CONTACTS CLOSED, WHICH KEEPS ALL N.C. DAMPERS OPEN.
2. UPON ACTIVATION OF DUCT SMOKE DETECTOR, THE DUCT SMOKE DETECTOR AND CFSD CONTROL RELAY BECOMES DE-ENERGIZED ON A SIGNAL FROM FACP, WHICH SHUTS POWER TO ALL DAMPER ACTUATORS AND ALL DAMPERS CLOSE IMMEDIATELY.

TYPICAL COMBINATION FIRE/SMOKE DAMPER WIRING DIAGRAM

2 N.T.S.

SECOND FLOOR ELECTRICAL PLAN

SCALE: 1/8" = 1'-0"

GRAPHIC SCALE: 1/8" = 1'- 0"

0 5 10 15 30

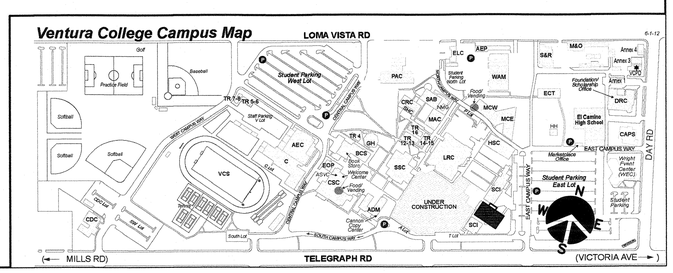

J & S CONSULTING ENGINEERS, INC.
ELECTRICAL • MECHANICAL
FIRE PROTECTION
3111 Winona Ave., #102
Burbank, Ca 91504
Tel.: (818) 841-0303
Fax: (818) 841-8531
470 Helga Ct. Unit A
Newbury Park, Ca. 91320
Tel. (818) 398-5793
Fax: (818) 841-8531
www.jandsconsulting.com
E-Mail: jsmail@jandsconsulting.com

PROJECT No. 45461

LICENSED ARCHITECT ANN M. ARCHER C-22205 APRIL 30, 2019 RENEWAL DATE STATE OF CALIFORNIA

REGISTERED PROFESSIONAL ENGINEER JOHN SHNADOR No. E11075 EXPIRES 06-30-17 ELECTRICAL STATE OF CALIFORNIA

VENTURA COLLEGE

4667 TELEGRAPH ROAD, VENTURA, CALIFORNIA, 93003
VENTURA COUNTY COMMUNITY COLLEGE DISTRICT

MATH & SCIENCE COMPLEX

IDENTIFICATION STAMP
DIV. OF THE STATE ARCHITECT
OFFICE OF REGULATION SERVICES
APPL. 03- 117754
AC FLS SS
DATE JUN 05 2017

NO.	DATE	DESCRIPTION	BY
	12.19.16	DSA SUBMITTAL	

REVISIONS

DRAWN BY: S.L.
CHECKED BY: N.J.
DATE 05.12.17
JOB NO: 45461

SHEET TITLE

SECOND FLOOR ELECTRICAL PLAN

SHEET

E-2.1

DWG # 76 OF 81

Job No. 45461, FILE: S:\J\45461\mechanical\E2-1.dwg, Layout1, Ref. Files: COMPOSITE.dwg, X-115.dwg, M1-3.dwg, X-315.dwg, M1-1.dwg, GENNOTES.dwg, X-Grid.dwg, M:\J\45461\mechanical\M1-2.dwg, Sheet.dwg
Plot Date: 07-05-17, 10:06am Plot scale: 1=1.25"dg, 1:1 Plot: jsml, 07-05-17, 10:06am
05-12-17 DSA SUBMITTAL

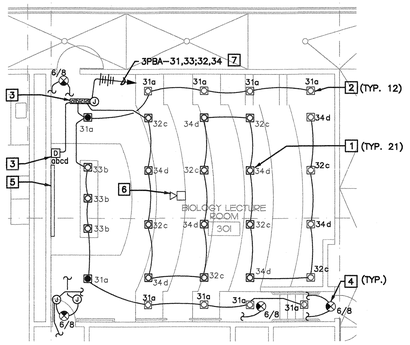

DEMOLITION NOTES:

1. DISCONNECT AND REMOVE EXISTING RECESS LED FIXTURES AND WIRING OVER CENTER OF ROOM. RETAIN FOR RELOCATION.
2. EXISTING LIGHTING FIXTURES & WIRING ON CEILING AREAS AT SIDES AND REAR OF ROOM TO REMAIN.
3. EXISTING DIMMER PACKS AND DIMMER CONTROLS TO REMAIN.
4. EXISTING EXIT SIGN TO REMAIN.
5. EXISTING MOTORIZED SCREEN AND WIRING TO REMAIN (PROTECT IN PLACE).
6. EXISTING OVERHEAD PROJECTOR TO REMAIN (PROTECT IN PLACE).

RETAIN EXISTING HOMERUN FOR RELOCATION.

2 ROOM 301 LIGHTING DEMOLITION PLAN

SCALE: 1/8" = 1'-0"

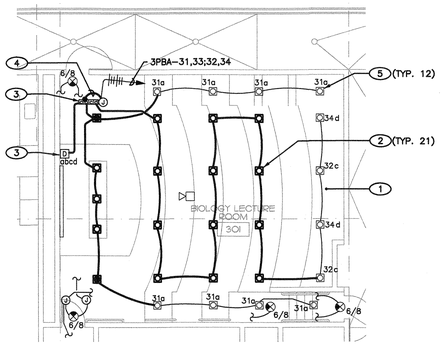

NOTES:

1. EXISTING DEVICE AND WIRING SHOWN IN LIGHT, THIN LINES. NEW WORK IS SHOWN IN DARK, HEAVY LINES.
2. REINSTALL EXISTING LED RECESSED FIXTURE, PROVIDE CONDUIT AND WIRING.
3. EXISTING DIMMERS AND CONTROLS.
4. RECONNECT TO EXISTING DIMMERS.
5. EXISTING LED RECESSED FIXTURE.

3 ROOM 301 LIGHTING PLAN

SCALE: 1/8" = 1'-0"

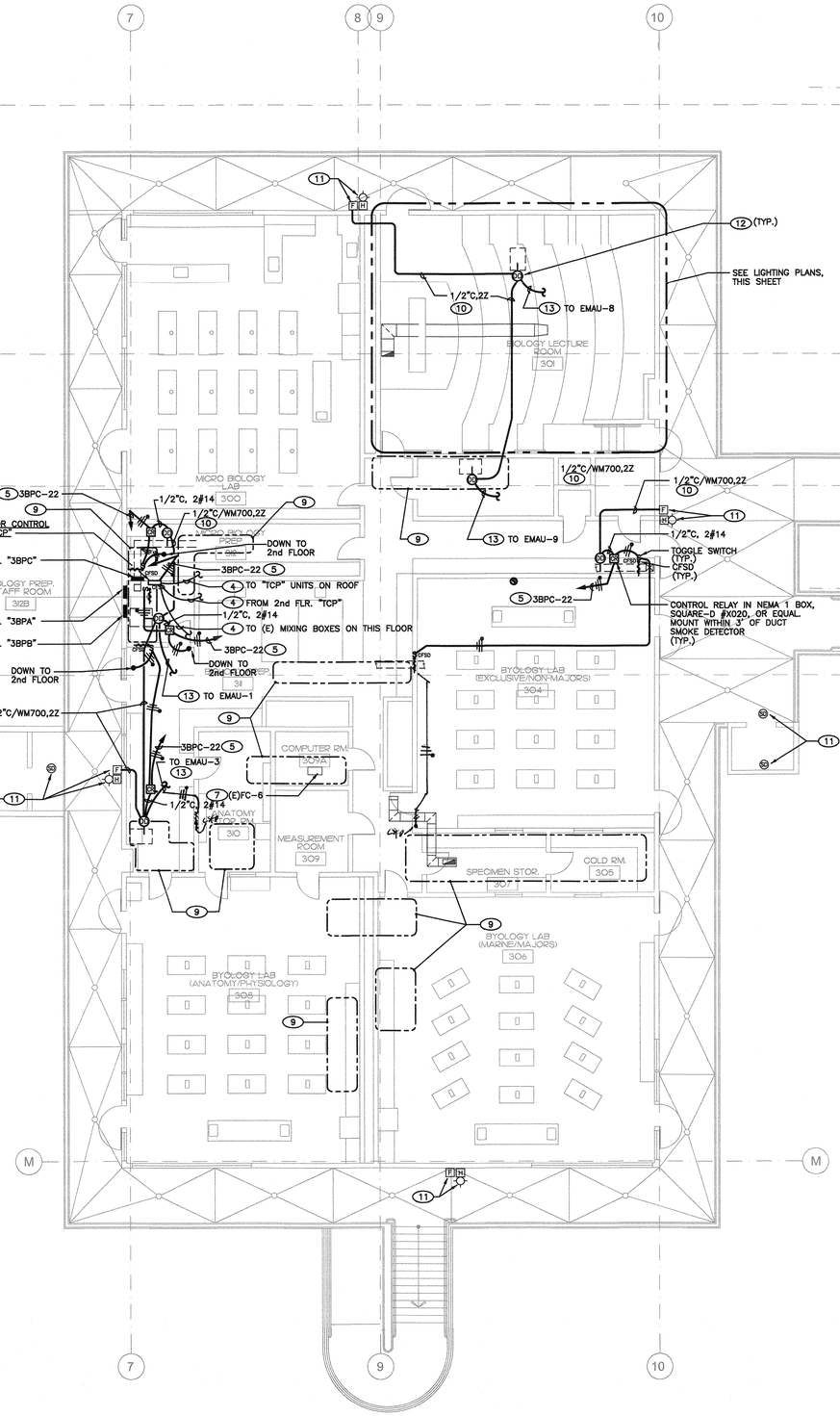

NOTES:

1. REFER TO SINGLE LINE DIAGRAM FOR REQUIREMENTS TO PROVIDE NEW ELECTRICAL EQUIPMENT AND DEVICES, AND CORRESPONDING CONDUIT AND WIRING.
2. PROVIDE LIQUID–TIGHT, FLEXIBLE CONDUIT AT FINAL CONNECTION TO EQUIPMENT.
3. 1/2"C, 2#12 & 1#12 GROUND. 120V CIRCUIT FOR CONTROL PANELS.
4. 3/4"C.O. SEE MECHANICAL PLANS FOR CONTROL WIRING DIAGRAMS AND REQUIREMENTS.
5. CONNECT TO SPARE 20A, 1–POLE CIRCUIT BREAKER.
6. PROVIDE 15A, 1–POLE CIRCUIT BREAKER IN EXISTING SPACE. NEW CIRCUIT BREAKER TO MATCH EXISTING.
7. DISCONNECT AND REMOVE EXISTING POWER CONDUCTORS BACK TO SOURCE. LABEL BREAKERS AS "SPARE", U.O.N.
8. 15A, 1P, 120V MOTOR RATED TOGGLE SWITCH.
9. TEMPORARY DISCONNECT AND REMOVE EXISTING LIGHT FIXTURES AND CIRCUITING FROM AREAS WHERE HVAC WORK IS TO BE DONE ABOVE CEILING. RETAIN FOR REINSTALLATION AND RECONNECTION AFTER HVAC WORK IS COMPLETED. VERIFY EXTENT OF WORK AREA WITH MECHANICAL DRAWINGS.
10. CONNECT TO EXISTING FIRE ALARM DEVICE BY EXTENDING THE EXISTING SLC LOOP FROM NEAREST INITIATING DEVICE.
11. EXISTING FIRE ALARM DEVICE. VERIFY EXACT LOCATION.
12. DUCT SMOKE DETECTOR. SEE MECHANICAL DRAWINGS FOR EXACT LOCATION.. TO MATCH DEVICES ON EXISTING SYSTEM FOR COMPATIBILITY.
13. 1/2"C, 2#14, CONNECT TO HVAC UNIT FOR UNIT SHUT–DOWN.

1 THIRD FLOOR ELECTRICAL PLAN

SCALE: 1/8" = 1'-0"

GRAPHIC SCALE: 1/8" = 1'- 0"

0 5 10 15 30

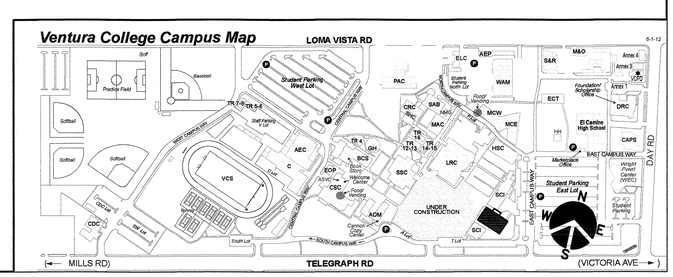

J & S CONSULTING ENGINEERS, INC.
ELECTRICAL - MECHANICAL
FIRE PROTECTION
3111 Winona Ave., #102
Burbank, Ca 91504
Tel.: (818) 841-0303
Fax: (818) 841-8531
470 Helga Ct. Unit A
Newbury Park, Ca. 91320
Tel. (818) 398-5793
Fax: (818) 841-8531
www.jandsconsulting.com
E-Mail: jsmail@jandsconsulting.com

PROJECT No. 45461

LICENSED ARCHITECT — LEILA ANN MANSOOR — C-22205 — APRIL 30, 2019 RENEWAL DATE — STATE OF CALIFORNIA

REGISTERED PROFESSIONAL ENGINEER — ROBERT SHAMAJIAN — No. E11075 — EXPIRES 06-30-17 — ELECTRICAL — STATE OF CALIFORNIA

VENTURA COLLEGE

4667 TELEGRAPH ROAD, VENTURA, CALIFORNIA, 93003
VENTURA COUNTY COMMUNITY COLLEGE DISTRICT

MATH & SCIENCE COMPLEX

IDENTIFICATION STAMP
DIV. OF THE STATE ARCHITECT
OFFICE OF REGULATION SERVICES
APPL. 03- 117754
AC — FLS — SS
DATE JUL 13 2017

NO.	DATE	DESCRIPTION	BY
	12.19.16	DSA SUBMITTAL	

REVISIONS

DRAWN BY:	S.L.
CHECKED BY:	N.J.
DATE	05.12.17
JOB NO:	45461

SHEET TITLE

THIRD FLOOR ELECTRICAL PLAN

SHEET

E-3.1

DWG # 76 OF 87

Job No. 45461 - FILE: N:\45461-Ventura\DWG\E3-1 - Elec_Lvl3.pl, Ref. Files: X-ZPBA.dwg, X2-1.dwg, N:\45461-Ventura\DWG\X-2.dwg, N:\45461-Ventura\DWG\X-3PDB.dwg, M2-1.dwg, M2-2.dwg, COMPOSITES.dwg, GENERIC5.dwg, X-Grid.dwg, Sheet.dwg
Plot Date: 07-05-17, 03:50pm, Plot scale: 1=1 - By: S.L. Pmp: psht: 30-05-17, 01:15pm
05-12-17 DSA SUBMITTAL

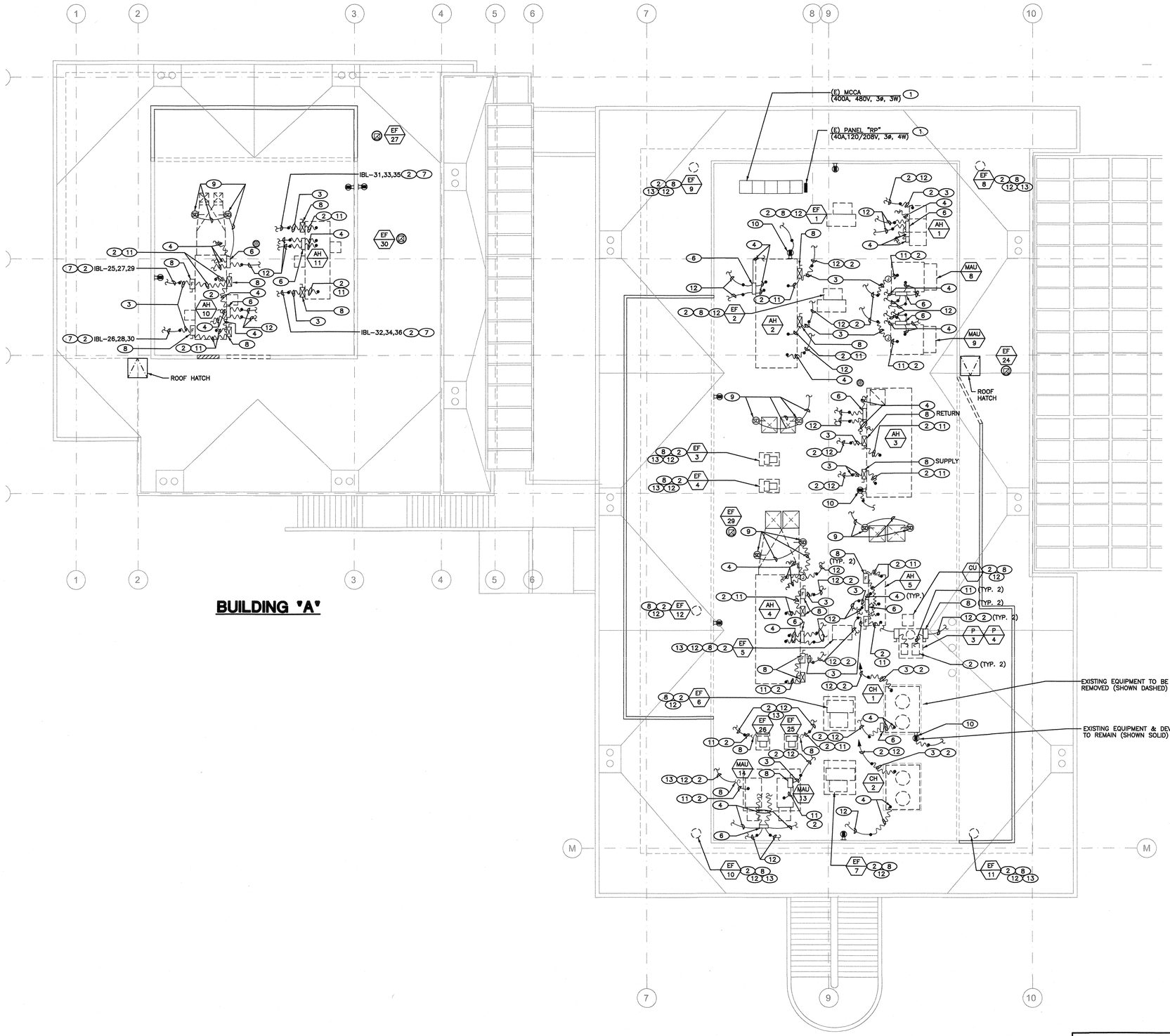

ELECTRICAL ROOF DEMOLITION PLAN

SCALE: 1/8" = 1'-0"

GRAPHIC SCALE: 1/8" = 1'- 0"

0 5 10 15 30

DEMOLITION NOTES:

1. SEE SINGLE LINE DIAGRAM.
2. DISCONNECT EXISTING POWER CIRCUIT AT BOTH ENDS AND REMOVE CONDUCTORS, U.O.N.
3. DISCONNECT AND REMOVE EXISTING FLEX CONDUIT FROM EQUIPMENT.
4. DISCONNECT EXISTING CONTROL CONDUCTORS AT BOTH ENDS AND REMOVE, AND DISCONNECT AND REMOVE FLEX CONDUIT FROM EQUIPMENT.
5. NOT USED.
6. DISCONNECT AND REMOVE EXISTING CONTROL CABINET.
7. DISCONNECT AND REMOVE EXISTING CONDUIT BACK TO BELOW ROOF.
8. DISCONNECT AND REMOVE EXISTING DISCONNECT SWITCH/STARTER.
9. EXISTING DUCT SMOKE DETECTORS TO BE DETACHED FROM EXISTING DUCTWORK AND PROTECTED IN PLACE. DO NOT DISCONNECT FROM EXISTING FIRE ALARM SYSTEM WIRING. DISCONNECT EXISTING HVAC SHUT-DOWN WIRING FROM EXISTING AH UNIT STARTER.
10. EXISTING W.P., GFI, ROOF RECEPTACLE AND CIRCUITING TO REMAIN. TEMPORARY DETACH FROM UNIT.
11. DISCONNECT AND REMOVE EXISTING CONDUIT FROM EQUIPMENT.
12. DISCONNECT AND REMOVE PORTION OF EXISTING CONDUIT FROM EQUIPMENT BACK TO ROOF STUB-UP AND CAP BELOW ROOF FOR REUSE.
13. LABEL EXISTING BREAKER AT PANEL "RP" AS "SPARE".

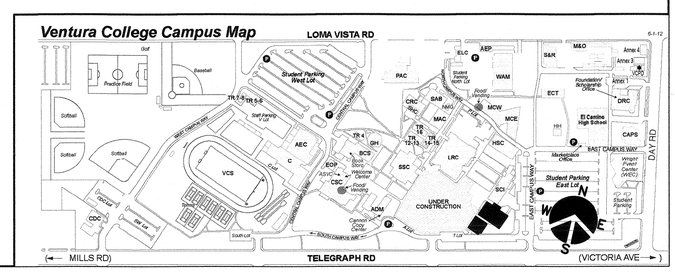

J & S CONSULTING ENGINEERS, INC.
ELECTRICAL • MECHANICAL
FIRE PROTECTION
3111 Winona Ave., #102
Burbank, Ca 91504
Tel.: (818) 841-0303
Fax: (818) 841-8531
470 Helga Ct. Unit A
Newbury Park, Ca. 91320
Tel. (818) 398-5793
Fax: (818) 841-8531
www.jandsconsulting.com
E-Mail: jsmail@jandsconsulting.com
PROJECT No. 45461

LICENSED ARCHITECT — ANN M. — C-22205 — APRIL 30, 2019 RENEWAL DATE — STATE OF CALIFORNIA

REGISTERED PROFESSIONAL ENGINEER — CESAR SHIMA 1242 — No. E11075 — EXPIRES 06-30-17 — ELECTRICAL — STATE OF CALIFORNIA

VENTURA COLLEGE

4667 TELEGRAPH ROAD, VENTURA, CALIFORNIA, 93003
VENTURA COUNTY COMMUNITY COLLEGE DISTRICT
MATH & SCIENCE COMPLEX

IDENTIFICATION STAMP
DIV. OF THE STATE ARCHITECT
OFFICE OF REGULATION SERVICES
APPL. 03- 117754
AC. — FLS — SS
DATE JUL 05 2017

NO.	DATE	DESCRIPTION	BY
	12.19.16	DSA SUBMITTAL	
REVISIONS			

DRAWN BY:	S.L.
CHECKED BY:	N.J.
DATE	05.12.17
JOB NO:	45461

SHEET TITLE

ELECTRICAL ROOF DEMOLITION PLAN

SHEET

E-4.1

DWG # 71 OF 82

Job No. 45461 | Date 05/12/17 | N:\45461-VenturaCOE\E-1-Elec_Demo.dwg | Xref Page_A-1-Civil.dwg, Sheet.dwg, X-root.dwg, N:\45461-VenturaCOE\XM-1.dwg
Plot Date: Dec 19, 2016 - 10:58am | Plot Scale: 1'=1'-0" | Plot Device: ARCH E1 (34.00 x 22.00 Inches) | By: S.L. | Layer: pdm-0=1-1-1-

NOTE: TO AVOID AMBIENT TEMPERATURE DERATING OF CONDUCTORS RUN IN CONDUITS EXPOSED ABOVE ROOFTOPS, AS REQUIRED BY CODE, ALL CONDUITS ABOVE ROOFTOP, INCLUDING HORIZONTAL AND VERTICAL RUNS, SHALL BE LIMITED IN LENGTH TO SHORT NIPPLES NOT EXCEEDING 24"L, AS ALLOWED BY CODE. CONSULT ELECTRICAL ENGINEER IF CONDUIT(S) IS EXCEEDING 24"L

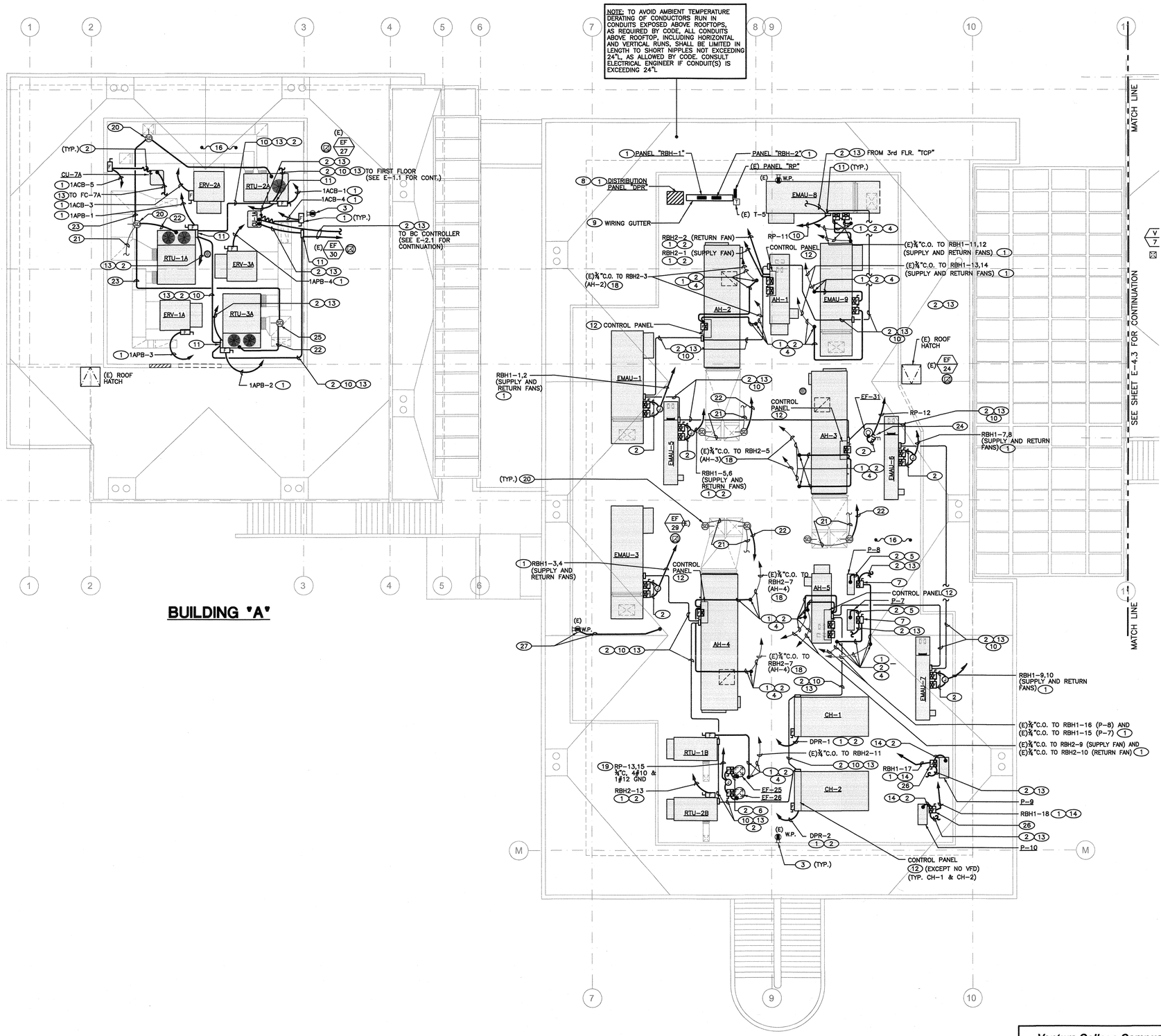

BUILDING "A"

BUILDING "B"

ELECTRICAL ROOF PLAN

SCALE: 1/8" = 1'-0"

GRAPHIC SCALE: 1/8" = 1'- 0"

0 5 10 15 30

NOTES:

1. REFER TO SINGLE LINE DIAGRAM FOR REQUIREMENTS TO PROVIDE NEW ELECTRICAL EQUIPMENT AND DEVICES, AND CORRESPONDING CONDUIT AND WIRING.
2. PROVIDE LIQUID-TIGHT, FLEXIBLE CONDUIT AT FINAL CONNECTION TO EQUIPMENT.
3. EXISTING W.P., GFI RECEPTACLES.
4. INTERCEPT EXISTING CONDUIT BELOW CEILING AND EXTEND TO NEW UNIT LOCATION, AS SHOWN.
5. 3/4"C, 3#8 & 1#10 GND.
6. 3/4"C, 2#10 & 1#12 GND.
7. PROVIDE W.P. 60A, 480V, 3-POLE, N.F. DISCONNECT SWITCH & VFD. INSTALL ON UNISTRUT SUPPORT FRAME, AS REQUIRED.
8. EXPAND EXISTING EQUIPMENT PLATFORM AS REQUIRED TO ACCOMMODATE NEW DISTRIBUTION PANEL.
9. PROVIDE 12"x12"x8'L WIRING GUTTER, NEMA 3R. INSTALL WIRING GUTTER ON TOP OF EXISTING CONDUITS STUBBED UP ON ROOF UNDER EXISTING REMOVED "MCCA". INSTALL PANELS "RBH-1" AND "RBH-2" ABOVE WIRING GUTTER AND CONNECT BOTH WITH SHORT VERTICAL 6" NIPPLES (DIAMETER AND NUMBER OF NIPPLES AS REQUIRED).
10. 1/2"C, 2#12 & 1#12 GROUND. 120V CIRCUIT FOR CONTROL PANELS.
11. EMS NETWORK CONTROL PANEL "TCP" AT HVAC UNIT.
12. A/C UNIT CONTROL PANEL PROVIDED WITH FACTORY BUILT-IN FUSED DISCONNECT SWITCH AND VFD, WHERE SHOWN.
13. PROVIDE CONTROL CONDUIT(S) OF THE SIZE AND QUANTITY PER CONTROL WIRING DIAGRAMS AND REQUIREMENTS, SHOWN ON MECHANICAL PLANS.
14. 3/4"C, 3#12 & 1#12 GND.
15. PROVIDE 15A, 480V, 3-POLE CIRCUIT BREAKER IN AVAILABLE PANEL SPACE TO MATCH EXISTING
16. ALL CONDUIT SHALL BE RUN VIA BELOW ROOF, U.O.N.
17. EMAU UNIT CONTROL PANEL WITH FACTORY PROVIDED, AND FIELD INSTALLED AND WIRED VFD WITH FUSED DISCONNECT SWITCH.
18. PARALLEL FEEDER RUN.
19. PROVIDE 40A/1P CIRCUIT BREAKER IN EXISTING SPACE.
20. EXISTING DUCT SMOKE DETECTORS TO BE RE-INSTALLED ON NEW SUPPLY DUCTS. SEE MECHANICAL DRAWINGS FOR EXACT LOCATION.
21. EXISTING FIRE ALARM WIRING TO REMAIN.
22. 1/2"C, 2#14 TO CONTROL PANEL. CONNECT FOR HVAC UNIT SHUT DOWN.
23. 1/2"C, 2Z. EXTEND EXISTING FIRE ALARM SLC LOOP AS SHOWN.
24. 15A, 125V, 1-POLE, MOTOR RATED, WEATHER PROOF TOGGLE SWITCH.
25. PROVIDE DUCT SMOKE DETECTOR TO MATCH, OR COMPATIBLE WITH EXISTING FIRE ALARM SYSTEM.
26. PROVIDE COMBINATION MOTOR STARTER/FUSED DISCONNECT SWITCH: SIZE 0, 30AS, 480V, 3P, W.P., WITH 10A FUSES.
27. RELOCATE (E) GFI RECEPTACLE. EXTEND CONDUIT & WIRING AS REQUIRED.

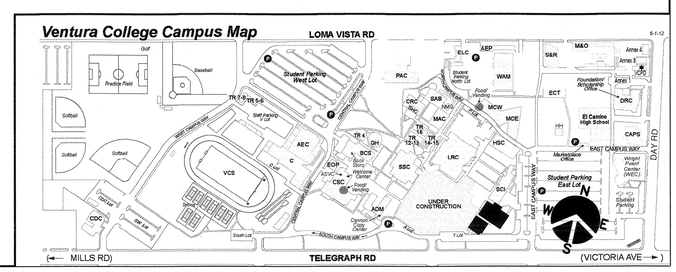

J & S CONSULTING ENGINEERS, INC.
ELECTRICAL • MECHANICAL
FIRE PROTECTION
3111 Winona Ave., #102
Burbank, Ca 91504
Tel.: (818) 841-0303
Fax: (818) 841-8531
470 Helga Ct. Unit A
Newbury Park, Ca. 91320
Tel. (818) 398-5793
Fax: (818) 841-8531
www.jandsconsulting.com
E-Mail: jsmail@jandsconsulting.com
PROJECT No. 45461

LICENSED ARCHITECT JOHN ANTHONY SAGOIAN C-22205 APRIL 30, 2019 RENEWAL DATE STATE OF CALIFORNIA

REGISTERED PROFESSIONAL ENGINEER JOHN SHINADOR No. E11075 EXPIRES 06-30-17 ELECTRICAL STATE OF CALIFORNIA

VENTURA COLLEGE

4667 TELEGRAPH ROAD, VENTURA, CALIFORNIA, 93003

VENTURA COUNTY COMMUNITY COLLEGE DISTRICT

MATH & SCIENCE COMPLEX

IDENTIFICATION STAMP
DIV. OF THE STATE ARCHITECT
OFFICE OF REGULATION SERVICES
APPL. 03- 117754
AC FLS SS
DATE JUL 03 2017

NO.	DATE	DESCRIPTION	BY
	12.19.16	DSA SUBMITTAL	

REVISIONS

DRAWN BY:	S.L.
CHECKED BY:	N.J.
DATE	05.12.17
JOB NO:	45461

SHEET TITLE

ELECTRICAL ROOF PLAN

SHEET

E-4.2

DWG # 76 OF 81

Job No. 45461 (T45), N:\45461-VenturaCol\E+T-2.dwg, Layout1, Ref. (Files), N:\45461-VenturaCol\Xrefs\VPE SAGOIAN.dwg, E0GOVNOTES.dwg, GENNOTES.dwg, MA-1.dwg, X-roof.dwg, X-roof.dwg, X-roof.dwg, N:\45461-VenturaCol\Art-2.dwg, Sheet.dwg
Plot Date: 05-11-17 (T5), N:\Sheet, Plot scale: 1'=1'0" by SLC Pen: pen0 05-11-17, 10:58am
05-12-17 DSA SUBMITTAL

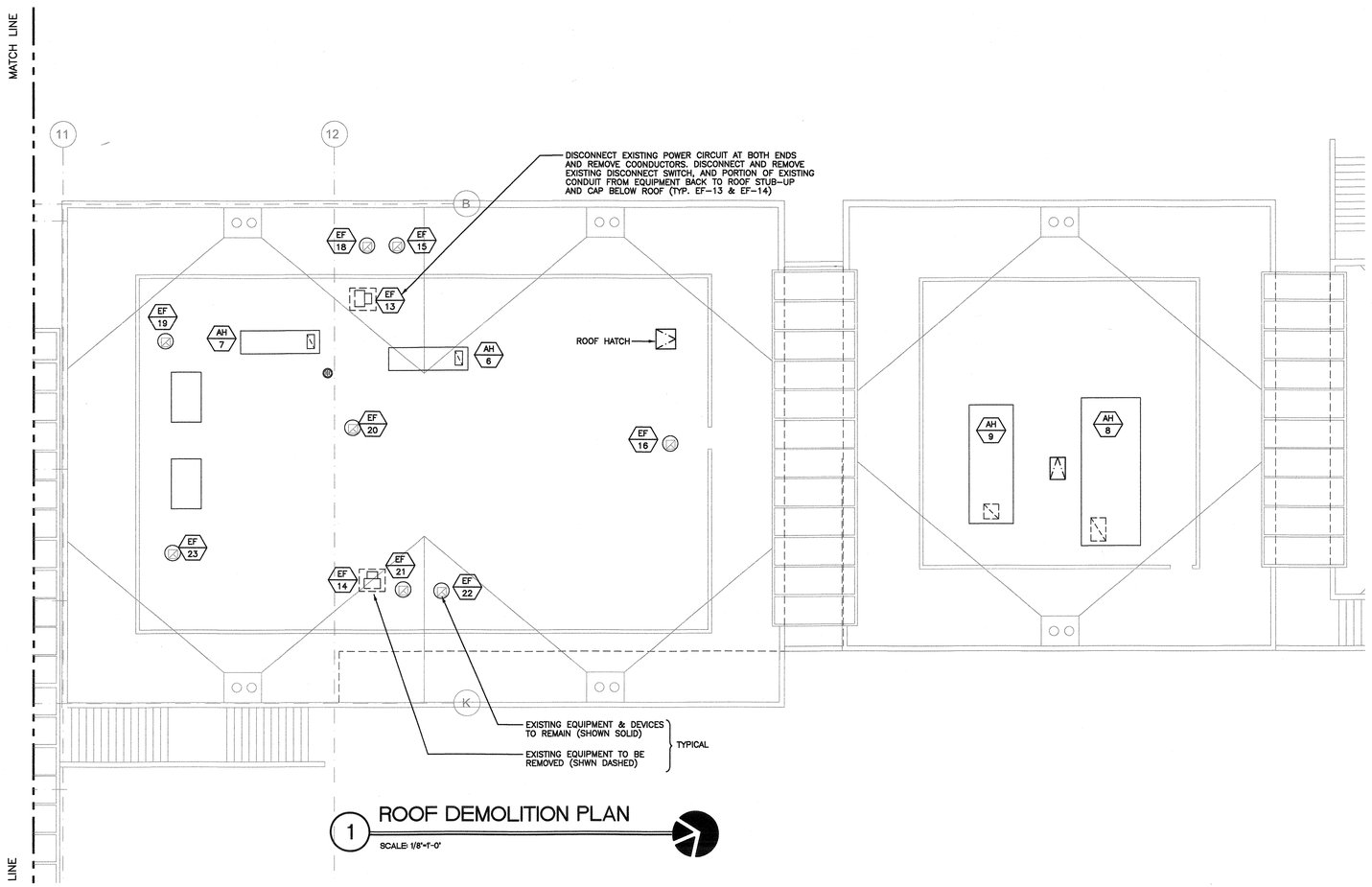

1 ROOF DEMOLITION PLAN

SCALE: 1/8"=1'-0'

GENERAL NOTES:

1. ALL DUCTWORK & DIFFUSERS SHOWN ON THE PLAN ARE EXISTING TO REMAIN, UNLESS NOTED OTHERWISE.
2. EXISTING DIFFUSERS TO BE CLEANED AND BALANCED TO AIR FLOW SHOWN.
3. ALL EXISTING DUCTWORK SUPPLY AIR, RETURN AIR, AND EXHAUST AIR TO BE REUSED (UNLESS NOTED OTHERWISE) TO BE INTERNALLY CLEANED. CLEANING TO BE PERFORMED PER SPECIFICATION 23 0130.51.
4. SEISMIC BRACING OF ALL NEW PIPING AND DUCTWORK SHALL BE DESIGN-BUILD BY THE CONTRACTOR. THE CONTRACTOR SHALL SUBMIT ENGINEERED SHOP DRAWINGS FOR ALL PROPOSED SEISMIC RESTRAINT SYSTEMS.

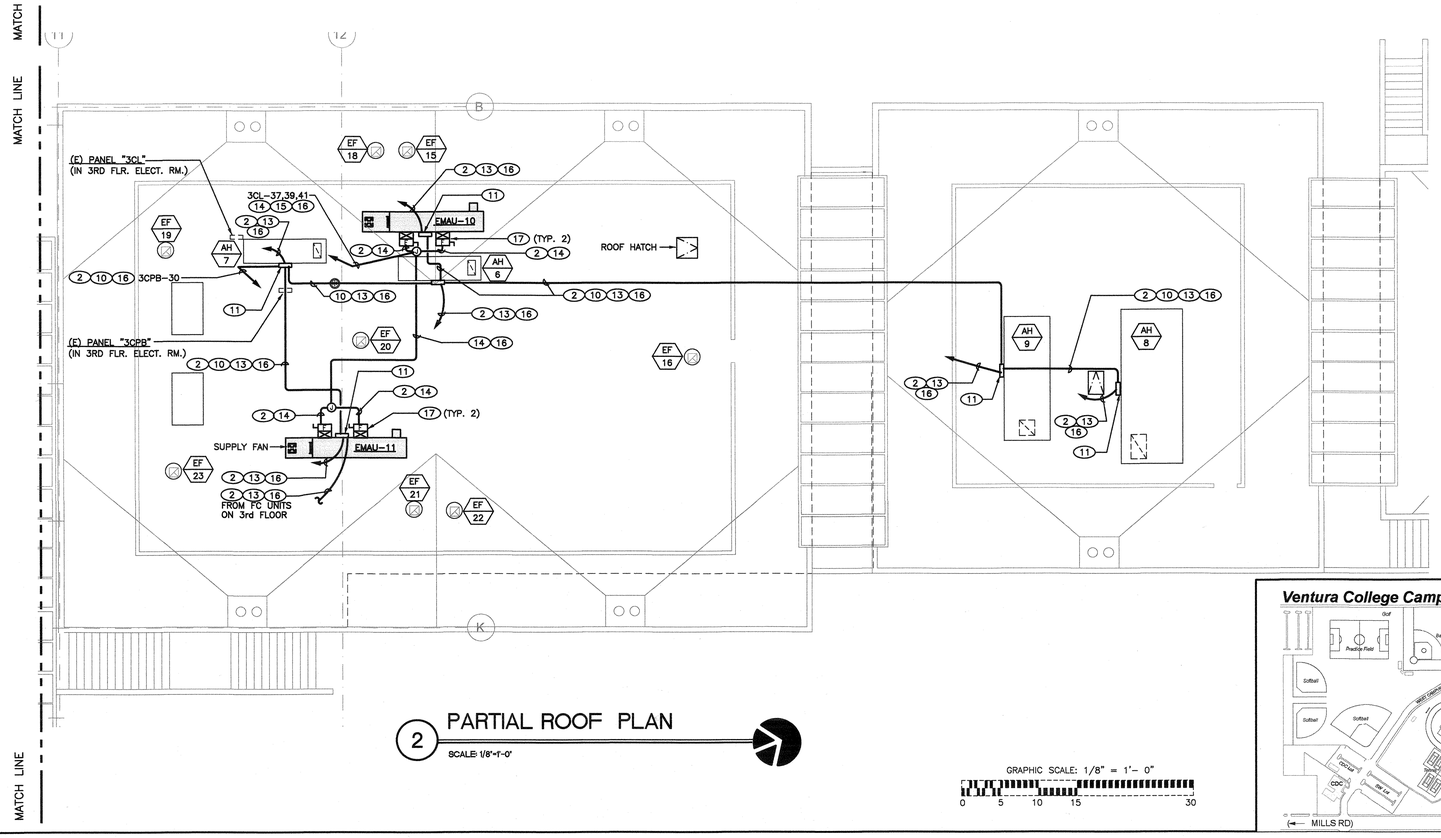

2 PARTIAL ROOF PLAN

SCALE: 1/8"=1'-0'

GRAPHIC SCALE: 1/8" = 1'- 0"

0 5 10 15 30

NOTES:

1. REFER TO SINGLE LINE DIAGRAM FOR REQUIREMENTS TO PROVIDE NEW ELECTRICAL EQUIPMENT AND DEVICES, AND CORRESPONDING CONDUIT AND WIRING.
2. PROVIDE LIQUID-TIGHT, FLEXIBLE CONDUIT AT FINAL CONNECTION TO EQUIPMENT.
3. EXISTING W.P., GFI RECEPTACLES.
4. INTERCEPT EXISTING CONDUIT BELOW CEILING AND EXTEND TO NEW UNIT LOCATION, AS SHOWN.
5. 3/4"C, 3#8 & 1#10 GND.
6. 3/4"C, 2#10 & 1#12 GND.
7. PROVIDE W.P. 60A, 480V, 3-POLE, N.F. DISCONNECT SWITCH & VFD. INSTALL ON UNISTRUT SUPPORT FRAME, AS REQUIRED.
8. EXPAND EXISTING EQUIPMENT PLATFORM AS REQUIRED TO ACCOMMODATE NEW DISTRIBUTION PANEL.
9. PROVIDE 12"x12"x8'L WIRING GUTTER, NEMA 3R. INSTALL WIRING GUTTER ON TOP OF EXISTING CONDUITS STUBBED UP ON ROOF UNDER EXISTING REMOVED "MCCA". INSTALL PANELS "RBH-1" AND "RBH-2" ABOVE WIRING GUTTER AND CONNECT BOTH WITH SHORT VERTICAL 6" NIPPLES (DIAMETER AND NUMBER OF NIPPLES AS REQUIRED).
10. 1/2"C, 2#12 & 1#12 GROUND. 120V CIRCUIT FOR CONTROL PANELS.
11. EMS NETWORK CONTROL PANEL "TCP" AT HVAC UNIT.
12. A/C UNIT CONTROL PANEL PROVIDED WITH FACTORY BUILT-IN FUSED DISCONNECT SWITCH AND VFD, WHERE SHOWN.
13. PROVIDE CONTROL CONDUIT(S) OF THE SIZE AND QUANTITY PER CONTROL WIRING DIAGRAMS AND REQUIREMENTS, SHOWN ON MECHANICAL PLANS.
14. 3/4"C, 3#12 & 1#12 GND.
15. PROVIDE 15A, 480V, 3-POLE CIRCUIT BREAKER IN AVAILABLE PANEL SPACE TO MATCH EXISTING
16. ALL CONDUIT SHALL BE RUN VIA BELOW ROOF, U.O,N.
17. EMAU UNIT CONTROL PANEL WITH FACTORY PROVIDED, AND FIELD INSTALLED AND WIRED VFD WITH FUSED DISCONNECT SWITCH.
18. PARALLEL FEEDER RUN.
19. PROVIDE 40A/1P CIRCUIT BREAKER IN EXISTING SPACE

Ventura College Campus Map

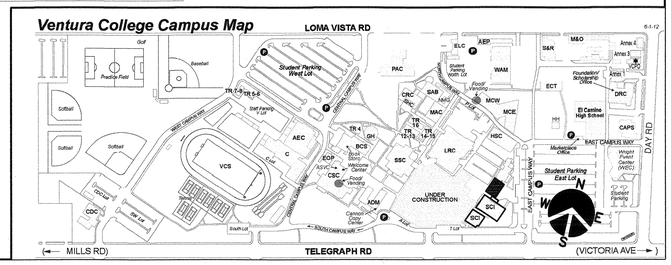

J & S CONSULTING ENGINEERS, INC.
ELECTRICAL ▫ MECHANICAL
FIRE PROTECTION
3111 Winona Ave., #102
Burbank, Ca 91504
Tel.: (818) 841-0303
Fax: (818) 841-8531
470 Helga Ct. Unit A
Newbury Park, Ca. 91320
Tel. (818) 398-5793
Fax: (818) 841-8531
www.jandsconsulting.com
E-Mail: jsmail@jandsconsulting.com

PROJECT No. 45461

LICENSED ARCHITECT JOHN ANTHONY SAVOR C-22205 APRIL 30, 2019 RENEWAL DATE STATE OF CALIFORNIA

REGISTERED PROFESSIONAL ENGINEER JOSE SHINAZER No. E11075 EXPIRES 06-30-17 ELECTRICAL STATE OF CALIFORNIA

VENTURA COLLEGE

4667 TELEGRAPH ROAD, VENTURA, CALIFORNIA, 93003
VENTURA COUNTY COMMUNITY COLLEGE DISTRICT
MATH & SCIENCE COMPLEX

IDENTIFICATION STAMP
DIV. OF THE STATE ARCHITECT
OFFICE OF REGULATION SERVICES
APPL. 03- 117754
AC. FLS
DATE 11 11 0 5 2017

NO.	DATE	DESCRIPTION	BY
	12.19.16	DSA SUBMITTAL	

REVISIONS

DRAWN BY:	S.L.
CHECKED BY:	N.J.
DATE	05.12.17
JOB NO:	45461

SHEET TITLE

BUILDING "C" ELECTRICAL ROOF PLANS

SHEET

E-4.3

DWG # 79 OF 82

Job No. 45461 FILE N:\45461-Ventura\DSA\E-4.3-Bldg. M-1.0 Ref. Files: N:\45461-Ventura\Cad\Xrefs\VMTC SKDGL.dwg, EXISTINGTIES.dwg, GENNOTES.dwg, M-1-Dwg, E-Grid.dwg, Sheet.dwg, X-roof.dwg
Plot Date: 05-11-17, 10:58am; Plot scale: 1=1"PS by: SL Prev. plot: 05-11-17, 10:53am
05-12-17 DSA SUBMITTAL

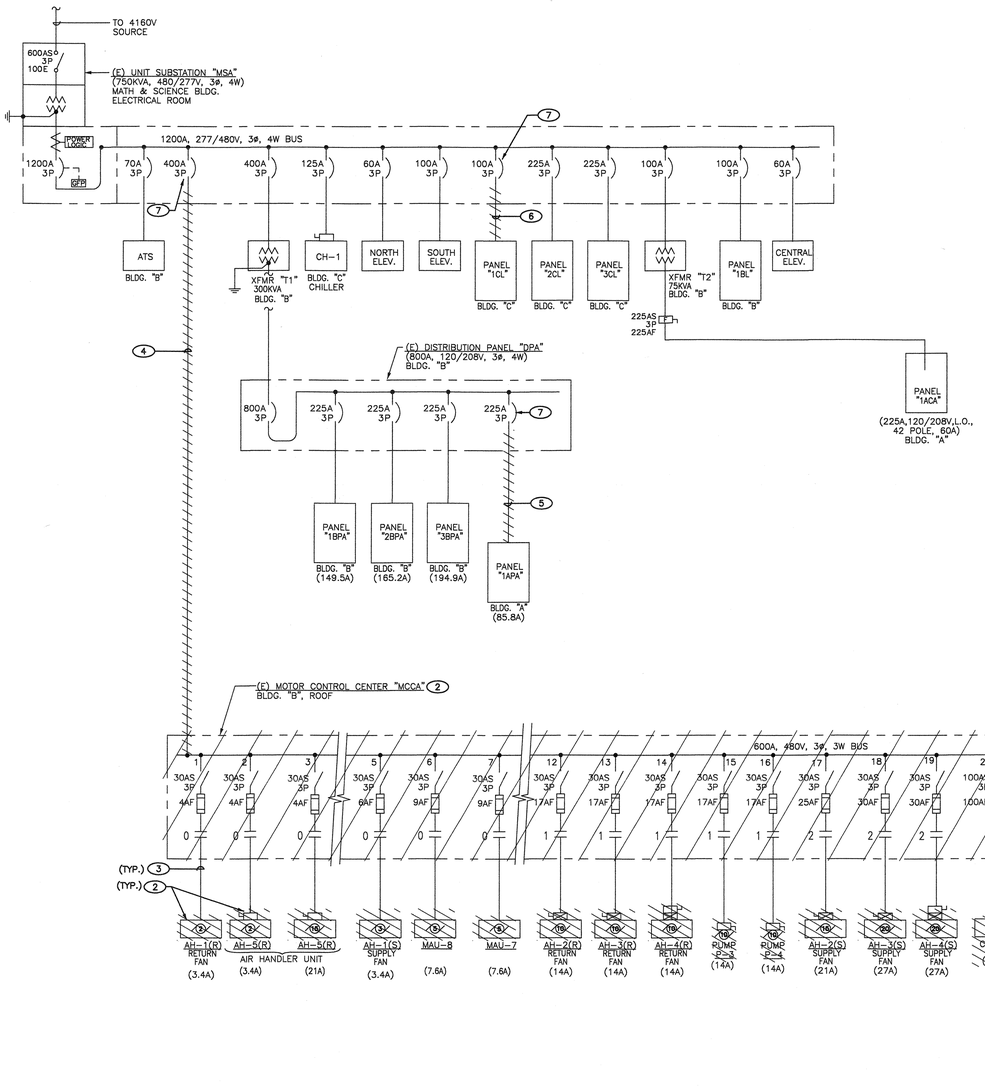

1 SINGLE LINE DIAGRAM- AS EXISTING

SCALE: N.T.S.

NOTES:

1. ALL EQUIPMENT AND WIRING SHOWN IN LIGHT LINES IS EXISTING TO REMAIN, U.N.O.
2. ALL EQUIPMENT AND WIRING SHOWN CROSSED OUT TO BE DISCONNECTED AND REMOVED.
3. EXISTING 3/4" CONDUIT TO BE REUSED.
4. DISCONNECT AND REMOVE EXISTING FEEDER CABLES. EXISTING 4" CONDUIT TO BE REUSED.
5. DISCONNECT AND REMOVE EXISTING FEEDER CABLES. EXISTING 2½" CONDUIT TO BE REUSED.
6. DISCONNECT AND REMOVE EXISTING FEEDER CABLES. EXISTING 1¼" CONDUIT TO BE REUSED.
7. LABEL EXISTING BREAKER AS "SPARE".

J & S CONSULTING ENGINEERS, INC.
ELECTRICAL ▫ MECHANICAL
FIRE PROTECTION
3111 Winona Ave., #102
Burbank, Ca 91504
Tel.: (818) 841-0303
Fax: (818) 841-8531
470 Helga Ct. Unit A
Newbury Park, Ca. 91320
Tel. (818) 398-5793
Fax: (818) 841-8531
www.jandsconsulting.com
E-Mail: jsmail@jandsconsulting.com

PROJECT No. 45461

LICENSED ARCHITECT — JEAN ANN MAJOR — C-22205 — APRIL 30, 2018 RENEWAL DATE — STATE OF CALIFORNIA

REGISTERED PROFESSIONAL ENGINEER — EDGAR SHINADOR — No. E11075 — EXPIRES 06-30-17 — ELECTRICAL — STATE OF CALIFORNIA

VENTURA COLLEGE

4667 TELEGRAPH ROAD, VENTURA, CALIFORNIA, 93003
VENTURA COUNTY COMMUNITY COLLEGE DISTRICT
MATH & SCIENCE COMPLEX

IDENTIFICATION STAMP
DIV. OF THE STATE ARCHITECT
OFFICE OF REGULATION SERVICES
APPL. 03- 117754
AC. FLS SS
DATE JUL 05 2017

NO.	DATE	DESCRIPTION	BY
	12.19.16	DSA SUBMITTAL	

REVISIONS

DRAWN BY:	S.L.
CHECKED BY:	N.J.
DATE	05.12.17
JOB NO:	45461

SHEET TITLE

SINGLE LINE DIAGRAM- AS EXISTING

SHEET

E-5.1

DWG # 30 OF 81

05-12-17 DSA SUBMITTAL

GENERAL NOTES:

1. THE TYPE OF CONDUCTORS PROVIDED FOR THIS PROJECT SHALL BE COPPER WITH TEMPERATURE RATING OF 90°C, UNLESS SPECIFICALLY NOTED AS 75°C. ALL CONDUCTORS SHALL BE OF "COMPACT STRANDING" TYPE, AND SHALL BE ONE OF THE FOLLOWING: THHW, THW-2, THWN-2, XHHW, XHHW-2. "COMPACT STRANDING" CONDUCTORS SHALL BE PROVIDED TO MAXIMIZE THE SIZE OF NEW CONDUCTORS TO BE PULLED IN EXISTING CONDUITS.
2. FOR MECHANICAL EQUIPMENT CONTROL, INTERLOCK, WIRING AND OTHER REQUIREMENTS SEE MECHANICAL DRAWINGS.

NOTES:

1. ALL ELECTRICAL EQUIPMENT, CONDUIT AND WIRING SHOWN IN LIGHT LINES IS EXISTING. NEW WORK IS SHOWN IN HEAVY LINES.
2. ALL SWITCHES, CIRCUIT BREAKERS AND OTHER EQUIPMENT, AS SHOWN, SHALL HAVE TERMINATION PROVISIONS LISTED AND IDENTIFIED FOR USE WITH 90°C COPPER CONDUCTORS, U.O.N., AND ALL FEEDER CONDUCTORS AND CONDUITS ARE SIZED BASED ON USE OF 90°C COPPER CONDUCTORS, U.O.N., OF TYPES LISTED IN GENERAL NOTE 1 ABOVE.
3. AH UNIT CONTROL PANEL WITH FACTORY PROVIDED, INSTALLED AND WIRED VFD WITH FUSED DISCONNECT SWITCH.
4. EMAU UNIT CONTROL PANEL WITH FACTORY PROVIDED, AND FIELD INSTALLED AND WIRED VFD WITH FUSED DISCONNECT SWITCH.
5. PULL NEW FEEDER CONDUCTORS IN EXISTING CONDUIT (FOR TYPE OF CONDUCTORS SEE GENERAL NOTE 1).
6. INTERCEPT EXISTING CONDUIT STUB-UP BENEATH PANEL "1APA" WITH PULL BOX, AS SHOWN.
7. PROVIDE CIRCUIT BREAKER TO MATCH EXISTING.
8. PROVIDE 12"x12" WIRING GUTTER ON ROOF OF BUILDING "B" AND PLACE ON TOP OF EXISTING CONDUITS STUBBED UP ON ROOF UNDER EXISTING "MOCA" BEING REMOVED. REFER TO BUILDING "B" ELECTRICAL ROOF PLAN, SHEET E-4.2, FOR DETAILED REQUIREMENTS FOR WIRING GUTTER PLACEMENT.
9. 100A, 3P, 250VAC, W.P. FUSED DISCONNECT SWITCH. SIZE FUSES PER NAMEPLATE DATA.
10. 60A, 3P, 250VAC, W.P. FUSED DISCONNECT SWITCH. SIZE FUSES PER NAMEPLATE DATA.
11. 30A, 2P, 250VAC, W.P. FUSED DISCONNECT SWITCH. SIZE FUSES PER NAMEPLATE DATA.
12. 15A, 2P, 250VAC MOTOR RATED TOGGLE SWITCH.
13. REPLACE EXISTING 100A LUGS ONLY PANEL WITH 225A LUGS ONLY PANEL. PROVIDE CIRCUIT BREAKERS TO MATCH EXISTING IN SIZE, AND TRANSFER ALL BRANCH CIRCUITS WHICH ARE TO REMAIN.
14. PARALLEL FEEDER RUN.
15. PROVIDE DEMAND METER FOR MONITORING BY THE EMS SYSTEM. PROVIDE 3/4"C.O. TO "TOP" PANEL IN THIS BUILDING ON THIS FLOOR. SEE CONTROL DIAGRAMS ON MECHANICAL PLANS FOR REQUIREMENTS.

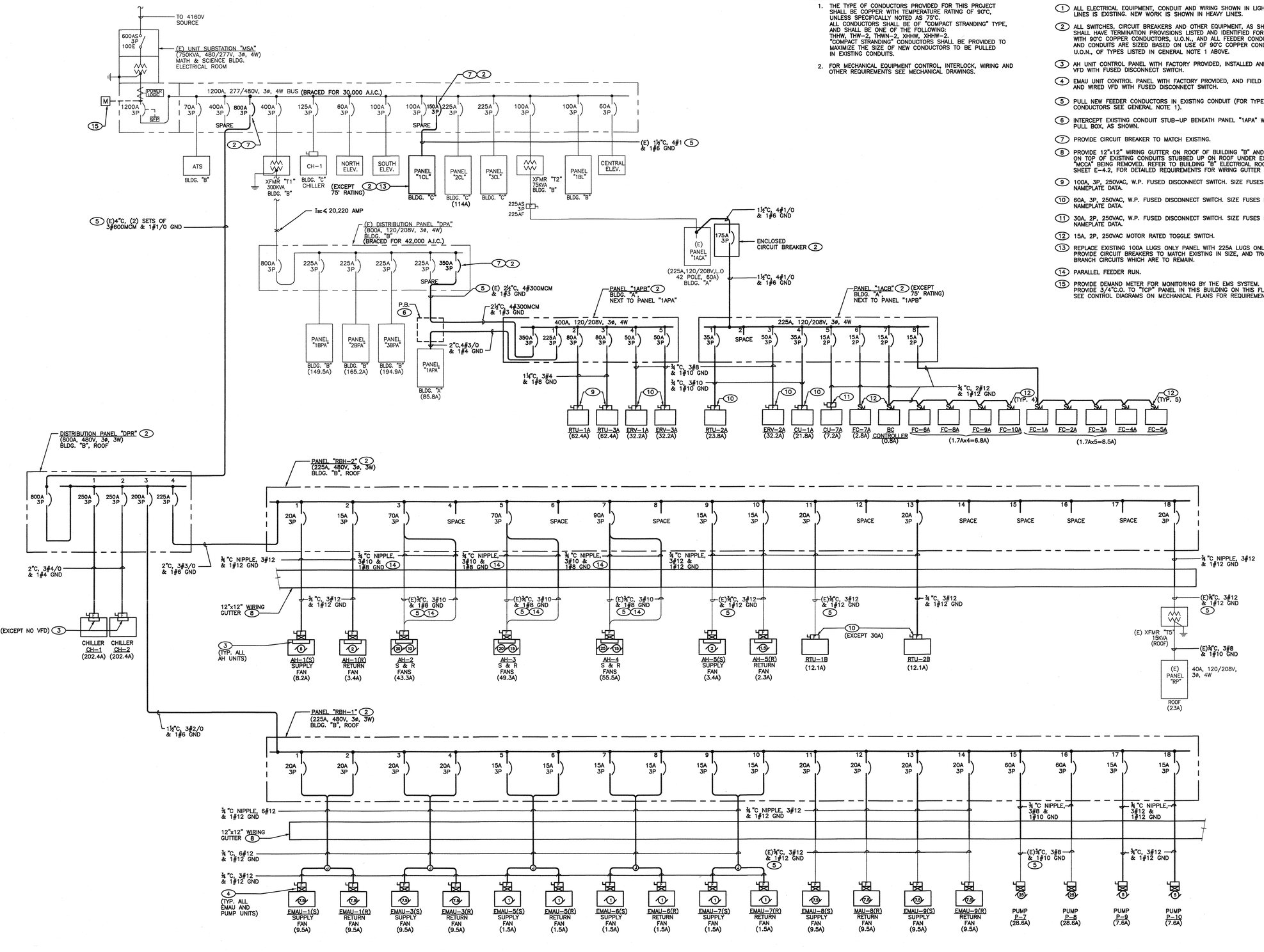

1 SINGLE LINE DIAGRAM - AS MODIFIED

NOT TO SCALE

J & S CONSULTING ENGINEERS, INC.
ELECTRICAL ▫ MECHANICAL
FIRE PROTECTION
3111 Winona Ave., #102
Burbank, Ca 91504
Tel.: (818) 841-0303
Fax: (818) 841-8531
470 Helga Ct. Unit A
Newbury Park, Ca. 91320
Tel. (818) 398-5793
Fax: (818) 841-8531
www.jandsconsulting.com
E-Mail: jsmall@jandsconsulting.com
PROJECT No. 45461

LICENSED ARCHITECT JOHN ANTHONY MOTOR C-22205 APRIL 30, 2019 RENEWAL DATE STATE OF CALIFORNIA

REGISTERED PROFESSIONAL ENGINEER JOHN SHNAIDER No. E11075 EXPIRES 06-30-17 ELECTRICAL STATE OF CALIFORNIA

VENTURA COLLEGE

4667 TELEGRAPH ROAD, VENTURA, CALIFORNIA, 93003
VENTURA COUNTY COMMUNITY COLLEGE DISTRICT
MATH & SCIENCE COMPLEX

IDENTIFICATION STAMP
DIV. OF THE STATE ARCHITECT
OFFICE OF REGULATION SERVICES
APPL. 03- 117754
AC. — FLS
DATE JUL 05 2017

NO.	DATE	DESCRIPTION	BY
	12.19.16	DSA SUBMITTAL	

REVISIONS

DRAWN BY:	S.L.
CHECKED BY:	N.J.
DATE	05.12.17
JOB NO:	45461

SHEET TITLE

SINGLE LINE DIAGRAM- AS MODIFIED

SHEET

E-5.2

DWG # 8(OF 81)

05-12-17 DSA SUBMITTAL

PANEL **RBH-1** 408 V, 3 PHASE, 3 WIRES **225 AMP** LUGS ONLY

LOCATION **BUILDING "B", ROOF** MOUNTING: **SURFACE** BUS RATING **225 AMP**

CKT	VA LOAD LINE A	VA LOAD LINE B	VA LOAD LINE C	LOAD DESCRIPTION	LML	OUTLETS MIS	OUTLETS REC	OUTLETS LTS	CIRCUIT BREAKER POL	CIRCUIT BREAKER TRP	BUS A	BUS B	BUS C	CIRCUIT BREAKER TRP	CIRCUIT BREAKER POL	OUTLETS LTS	OUTLETS REC	OUTLETS MIS	LML	LOAD DESCRIPTION	VA LOAD LINE A	VA LOAD LINE B	VA LOAD LINE C	CKT
1	2605			EMAU-1 (S)		1				20				20				1		EMAU-1 (R)	2605			2
		2605							3						3							2605		
			2605																				2605	
3	2605			EMAU-3 (S)		1				20				20				1		EMAU-3 (R)	2605			4
		2605							3						3							2605		
			2605																				2605	
5	415			EMAU-5 (S)		1				15				15				1		EMAU-5 (R)	415			6
		415							3						3							415		
			415																				415	
7	610			EMAU-6(S)		1				15				15				1		EMAU-6 (R)	415			8
		610							3						3							415		
			610																				415	
9	415			EMAU-7 (S)		1				15				15				1		EMAU-7 (R)	415			10
		415							3						3							415		
			415																				415	
11	2605			EMAU-8 (S)		1				20				20				1		EMAU-8 (R)	2605			12
		2605							3						3							2605		
			2605																				2605	
13	2605			EMAU-9 (S)		1				20				20				1		EMAU-9 (R)	2605			14
		2605							3						3							2605		
			2605																				2605	
15	7925			PUMP P-7		1				60				60				1		PUMP P-8	7925			16
		7925							3						3							7925		
			7925																				7925	
17	2105			PUMP P-9		1				15				15				1		PUMP P-10	2105			18
		2105							3						3							2105		
			2105																				2105	
	21890	21890	21890	SUBTOTALS																	21695	21695	21695	
																				LINE TOTALS	43,585	43,585	43,585	
																				LML ADDER				
																				TOTAL VA/PH	43,585	43,585	43,585	
																				LINE AMPS	157	157	157	

NOTES:

PANEL **RBH-2** 408 V, 3 PHASE, 3 WIRES **225 AMP** LUGS ONLY

LOCATION **BUILDING "B", ROOF** MOUNTING: **SURFACE** BUS RATING **225 AMP**

CKT	VA LOAD LINE A	VA LOAD LINE B	VA LOAD LINE C	LOAD DESCRIPTION	LML	OUTLETS MIS	OUTLETS REC	OUTLETS LTS	CIRCUIT BREAKER POL	CIRCUIT BREAKER TRP	BUS A	BUS B	BUS C	CIRCUIT BREAKER TRP	CIRCUIT BREAKER POL	OUTLETS LTS	OUTLETS REC	OUTLETS MIS	LML	LOAD DESCRIPTION	VA LOAD LINE A	VA LOAD LINE B	VA LOAD LINE C	CKT
1	2270			AH-1 (S)		1				20				15				1		AH-1 (R)	940			2
		2270							3						3							940		
			2270																				940	
3	11980			AH-2		1				70										SPACE				4
		11980							3															
			11980																					
5	13640			AH-3		1				70										SPACE				6
		13640							3															
			13640																					
7	15370			AH-4		1				90										SPACE				8
		15370							3															
			15370																					
9	940			AH-5 (S)		1				15				15				1		AH-5 (R)	940			10
		940							3						3							940		
			940																				940	
11	3350			RTU-1B		1				20										SPACE				12
		3350							3															
			3350																					
13	3350			RTU-2B		1				20										SPACE				14
		3350							3															
			3350																					
15				SPACE																				16
17				SPACE										20				1		XFMR "TS" (PANEL "RP")	5000			18
															3							5000		
																							5000	
	50900	50900	50900	SUBTOTALS																	6880	6880	6880	
																				LINE TOTALS	57,780	57,780	57,780	
																				LML ADDER				
																				TOTAL VA/PH	57,780	57,780	57,780	
																				LINE AMPS	209	209	209	

NOTES:

J & S CONSULTING ENGINEERS, INC.
ELECTRICAL = MECHANICAL
FIRE PROTECTION
3111 Winona Ave., #102
Burbank, Ca 91504
Tel.: (818) 841-0303
Fax: (818) 841-8531
470 Helga Ct. Unit A
Newbury Park, Ca. 91320
Tel. (818) 398-5793
Fax: (818) 841-8531
www.jandsconsulting.com
E-Mail: jsmail@jandsconsulting.com

PROJECT No. 45461

LICENSED ARCHITECT JEAN ANN LAMOUR C-22205 APRIL 30, 2019 RENEWAL DATE STATE OF CALIFORNIA

REGISTERED PROFESSIONAL ENGINEER JOSE SHINATADR No. E11075 EXPIRES 06-30-17 ELECTRICAL STATE OF CALIFORNIA

VENTURA COLLEGE

4667 TELEGRAPH ROAD, VENTURA , CALIFORNIA, 93003
VENTURA COUNTY COMMUNITY COLLEGE DISTRICT

MATH & SCIENCE COMPLEX

IDENTIFICATION STAMP
DIV. OF THE STATE ARCHITECT
OFFICE OF REGULATION SERVICES
APPL. 03- 117754
AC FLS SS
DATE JUL 05 2017

NO.	DATE	DESCRIPTION	BY
	12.19.16	DSA SUBMITTAL	

REVISIONS

DRAWN BY: S.L.
CHECKED BY: N.J.
DATE 05.12.17
JOB NO: 45461

SHEET TITLE

PANEL SCHEDULES

SHEET

E-5.3

DWG # 84 OF 87

05-12-17 DSA SUBMITTAL